YANMAR

PARTS CATALOG

0CR10-M09002EN

Last update Mar., 2015

Introduction

1. This is the parts catalog for 1GM, 2GM, 2GMF, 3GM, 3GMF, 3GMD, 3HM, 3HMF Diesel engine. (Parts catalog No. 000Y00R0902)

2. This parts catalog does not contain the technical data needed for maintenance service.

3. The illustrations used in this parts catalog have been simplified for clarity.

4. The contents of this parts catalog are subject to change without notice.

5. Be sure to use only Yanmar genuine part for repairs. If imitation parts are used, it may cause engine defects.

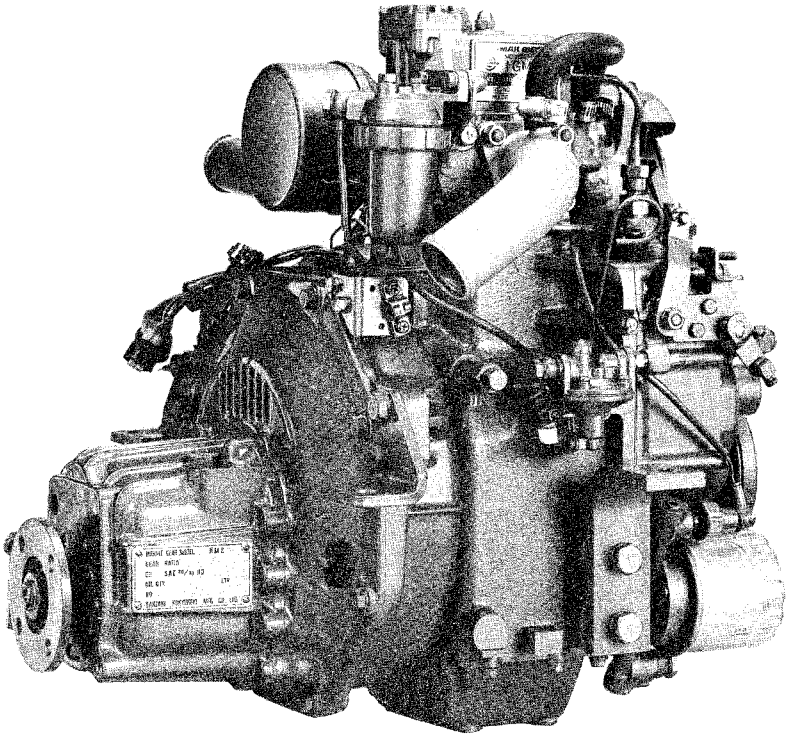

MODEL 1GM 2GM 2GMF 3GM 3GMD 3GMF 3HM 3HMF

Pub. No. 000Y00R0902

First Published: June, 1980
First Revised: January, 1982

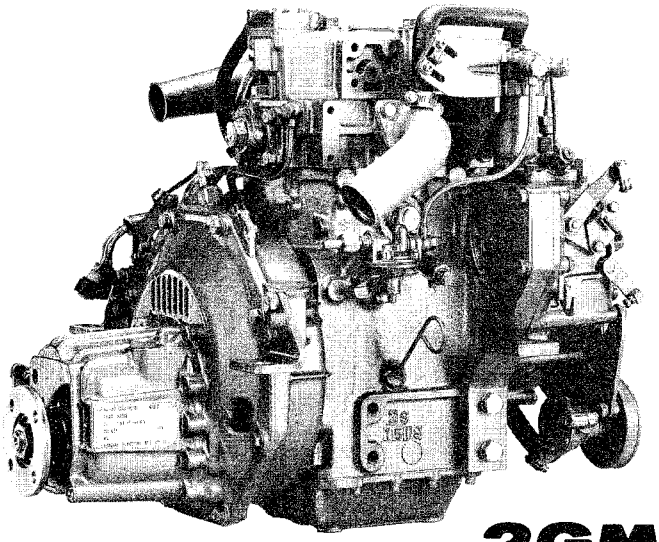

2GM

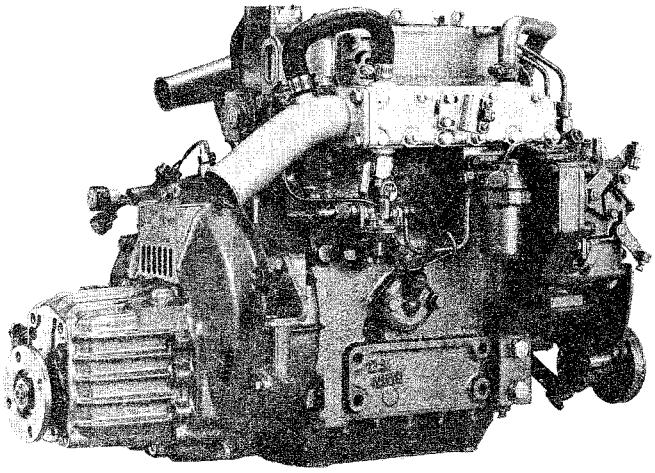

3GM

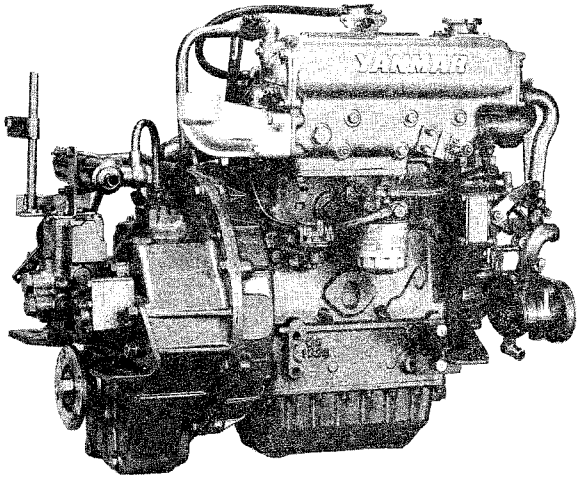

3HMF

Contents

0CR10-M09002

Fig. No.	Fig. Name
1-3GM	
1.	CYLINDER BLOCK(1,2GM(F))
2.	CYLINDER BLOCK
3.	GEAR HOUSING
4.	FLYWHEEL HOUSING
5.	LUB. OIL SUMP
6.	MAIN METAL HOUSING(1,2GM(F))
7.	MAIN METAL HOUSING
8.	BREATHER
9.	ENGINE LIFTER
10.	MOUNTING FOOT
11.	CYLINDER HEAD
12.	BONNET
13.	AIR INTAKE SILENCER
14.	EXHAUST MANIFOLD
15.	MIXING ELBOW
16.	MIXING ELBOW(U-TYPE/OPTIONAL)
17.	CAMSHAFT
18.	CRANKSHAFT & FLYWHEEL
19.	PISTON
20.	CONNECTING ROD
21.	LUB. OIL PUMP
22.	LUB. OIL DIPSTICK
23.	LUB. OIL STRAINER
24.	LUB. OIL PRESSURE CONTROL VALVE
25.	LUB. OIL PIPE
26.	COOLING SEA WATER PUMP
27.	COOLING FRESH WATER PUMP
28.	COOLING FRESH WATER COOLER
29.	COOLING FRESH WATER COOLER(3HMF)
30.	SUB-TANK
31.	COOLING WATER PIPE
32.	COOLING WATER PIPE(2,3GMF,3HMF)
33.	THERMOSTAT
34.	FUEL INJECTION PUMP
35.	FUEL FEED PUMP
36.	FUEL INJECTION VALVE
37.	FUEL STRAINER
38.	FUEL PIPE
39.	GOVERNOR DRIVING
40.	REGULATOR LINKS
41.	FUEL CONTROLLER
42.	ENGINE STOP DEVIC
43.	SPEED REMOTE CONTROL
44.	STARTING MOTOR
45.	STARTING MOTOR COMPONENT PART(12V/1.0KW)
46.	STARTING MOTOR COMPONENT PART(12V/1.8KW)
47.	GENERATOR(AC)
48.	GENERATOR COMPONENT PART(121370-77200)
49.	GENERATOR COMPONENT PART(128170-77200)

Contents

Fig. No.	Fig. Name
50.	GENERATOR COMPONENT PART(128170-77201)
51.	GENERATOR COMPONENT PART(128270-77200)
52.	WIRE HARNESS
53.	CLUTCH
54.	CLUTCH REMOTE CONTROL
55.	TOOL
56.	FLEXIBLE MOUNTING(OPTIONAL)
57.	LUB. OIL WASTE,BILGE PUMP & KINGSTON COCK(OPTIONAL)
58.	FUEL OIL TANK & BATTERY SWITCH(OPTIONAL)
59.	COUPLING(TAPER & SLIT TYPE/OPTIONAL)
60.	SINGLE LEVER CONTROL(OPTIONAL)
61.	INSTRUMENT PANEL(M1/M2-TYPE)(OPTIONAL)
62.	INSTRUMENT PANEL(S-TYPE/OPTIONAL)
63.	SPECIAL TOOL(OPTIONAL)
64.	REPAIR KIT(OPTIONAL)
65.	GASKET KIT(OPTIONAL)
66.	CLUTCH HOUSING
67.	INPUT SHAFT & IDLE GEAR SHAFT
68.	OUTPUT SHAFT
69.	CONTROL DEVICE
70.	CLUTCH HOUSING
71.	INPUT SHAFT & IDLE GEAR SHAFT
72.	OUTPUT SHAFT
73.	COOLING SEA WATER PUMP
74.	COOLING FRESH WATER PUMP & SUB-TANK
75.	COOLING FRESH WATER PUMP
76.	COOLING WATER PIPE & V-BELT
77.	FUEL PIPE

Fig.1. CYLINDER BLOCK(1,2GM(F))

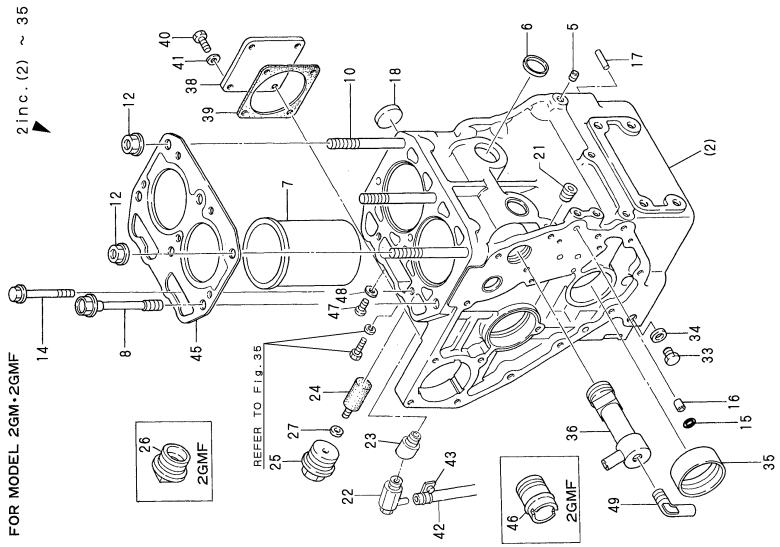

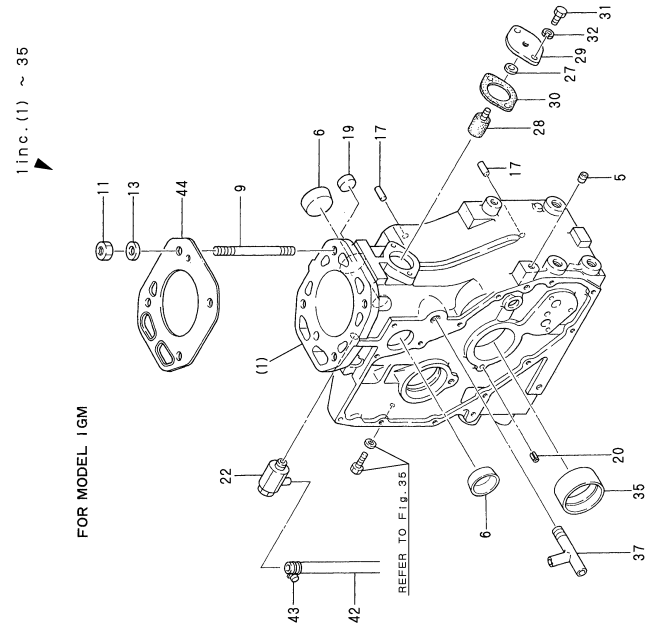

Remarks:
REFER No.2
For cylinder block assembly of 2GMF; that of 2GM is to be supplied.
Differences found in the constituent parts of assembly are as follow:

	Parts unnecessary for 2GMF	Parts necessary for 2GM but not included
Reference No.	24, 25, 27, 35, 36	26, 46

(A)=1GM (B)=2GM(F) (C)=3GM(F) (D)=3GMD (E)=3HM (F)=3HMF

No.	Lev.	Parts No.	Description	Q'ty (A)	(B)	(C)	(D)	(E)	(F)	I	R
1	1	728170-01560	BLOCK ASSY, CYLINDER	1							
2	1	728270-01560	BLOCK ASSY, CYLINDER		1						
5	2	124060-01050	PLUG, PT1/8	1	6						
6	2	105311-01090	PLUG, 30	2	4						
7	2	121450-01100	LINER ASSY, CYLINDER		2						
8	2	121450-01203	BOLT, HEAD		3						
9	2	128170-01200	BOLT, HEAD	4							
10	2	121450-01210	BOLT, HEAD		3						
11	2	105025-01220	NUT, CYLINDER HEAD	4							
12	2	121450-01220	NUT, CYLINDER HEAD		3						
13	2	105425-01250	WASHER	4							
14	2	121450-01231	BOLT, HEAD		2						
15	2	24311-000100	O-RING, 1AP10.0		2						
16	2	105225-01900	GUIDE		2						
17	2	22312-080160	PIN, PARALLEL M8X16	2	2						
18	2	121450-01990	PLUG, 30		1						
19	2	27243-200000	PLUG, 20	1							
20	2	22351-040008	PIN, SPRING 4.0X 8	1							
21	2	23873-020000	PLUG, R02		1						
22	2	43600-500290	COCK 1/4	1	1						
23	2	128270-01890	SPACER		1					W	
		(B=E/#00019)									
24	2	27210-200300	ZINC, SCREW20X30		2						
25	2	128270-09300	PLUG, NPTF1		1						
26	2	121750-01920	PLUG, NPTF1		1						
27	2	123210-09310	GASKET	1	2						
28	2	27210-200200	ZINC, SCREW20X20	1							
29	2	128170-09320	FLANGE	1							
30	2	104211-49160	GASKET	1							
31	2	26116-060142	BOLT, M6X 14 PLATED	2							
32	2	22217-060000	WASHER, SPRING 6	2							
33	2	121450-01960	PLUG, PF1/4		1						
34	2	121450-01980	GASKET		1						
35	2	121450-02100	BEARING, MAIN	1	1						
36	1	128270-01450	JOINT		1						
37	1	105582-49090	JOINT, 3-WAY	1							
38	1	124240-01871	COVER		1						
39	1	124240-01882	GASKET		1						
40	1	26116-080142	BOLT 8X14		4						
41	1	23414-080000	GASKET, 8X1.0		4						
42	1	23061-070200	PIPE, 7X 200	1	1						
43	1	124460-77680	RETAINER	1	1						
44	1	128170-01330	GASKET, HEAD	1							
44-1	1	128170-01331	GASKET, HEAD	1						N	
	(A=*1981.01)										
45	1	128270-01330	GASKET, HEAD		1						
45-1	1	128270-01331	GASKET, HEAD		1					N	
		(B=*1980.11)									
46	1	124160-49480	JOINT, PIPE		1						
47	1	124060-32990	PLUG		1						
48	1	23414-080000	GASKET, 8X1.0		1						

N:Old $\xleftarrow[\text{No}]{\text{Yes}}$ New, Q:Old $\xleftarrow[\text{Yes}]{\text{No}}$ New, R:Old $\xleftarrow[\text{Yes}]{\text{Yes}}$ New, S:Old $\xleftarrow[\text{No}]{\text{No}}$ New, W:Add, Z:Discontinued, F:Interchangeable by set, K:Q'ty Change

++ CONTINUE ++

Copyright (C) YANMAR CO., LTD. All RightsReserved.

Fig.1. CYLINDER BLOCK(1,2GM(F))

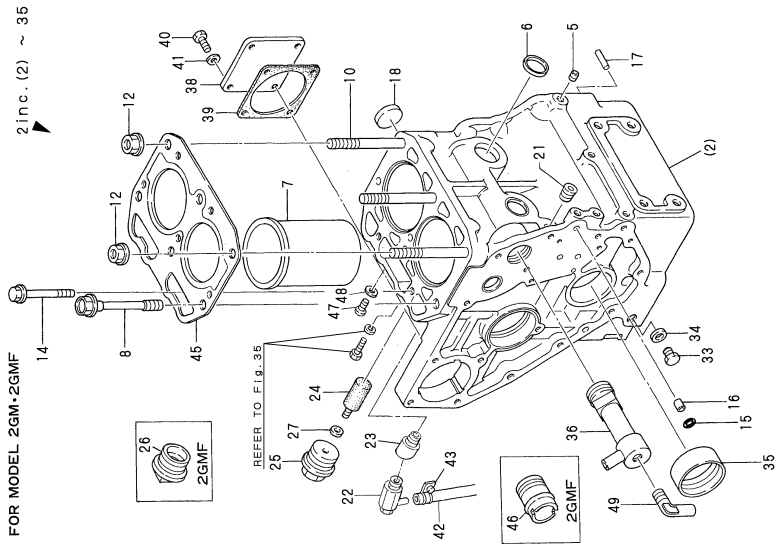

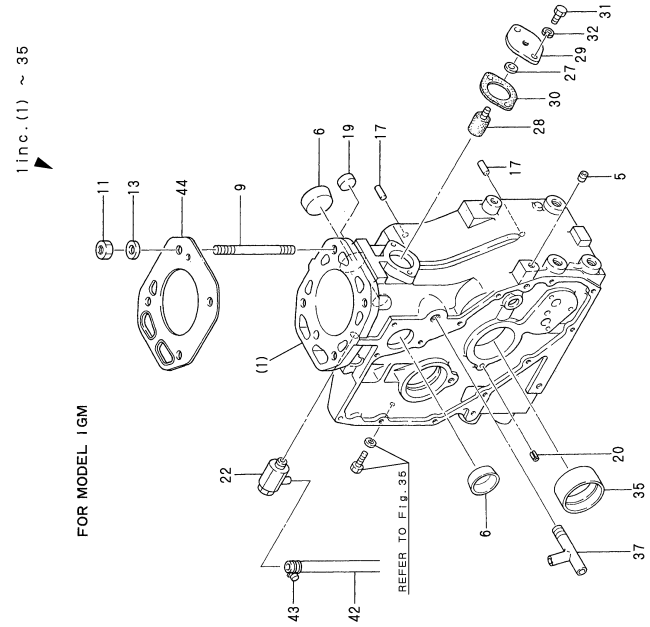

Remarks:
REFER No.2
For cylinder block assembly of 2GMF, that of 2GM is to be supplied.
Differences found in the constituent parts of assembly are as follow:

Reference No.	Parts unnecessary for 2GMF	Parts necessary for 2GM but not included
	24, 25, 27, 35, 36	26, 46

(A)=1GM (B)=2GM(F) (C)=3GM(F) (D)=3GMD (E)=3HM (F)=3HMF

No.	Lev.	Parts No.	Description	Q'ty (A)	(B)	(C)	(D)	(E)	(F)	I	R
49	1	105583-49910	ELBOW, PT1/4		1						

N:Old ←Yes/No→ New, Q:Old ←No/Yes→ New, R:Old ←Yes/Yes→ New, S:Old ←No/No→ New, W:Add, Z:Discontinued, F:Interchangeable by set, K:Q'ty Change

Copyright (C) YANMAR CO., LTD. All RightsReserved.

Fig.2. CYLINDER BLOCK

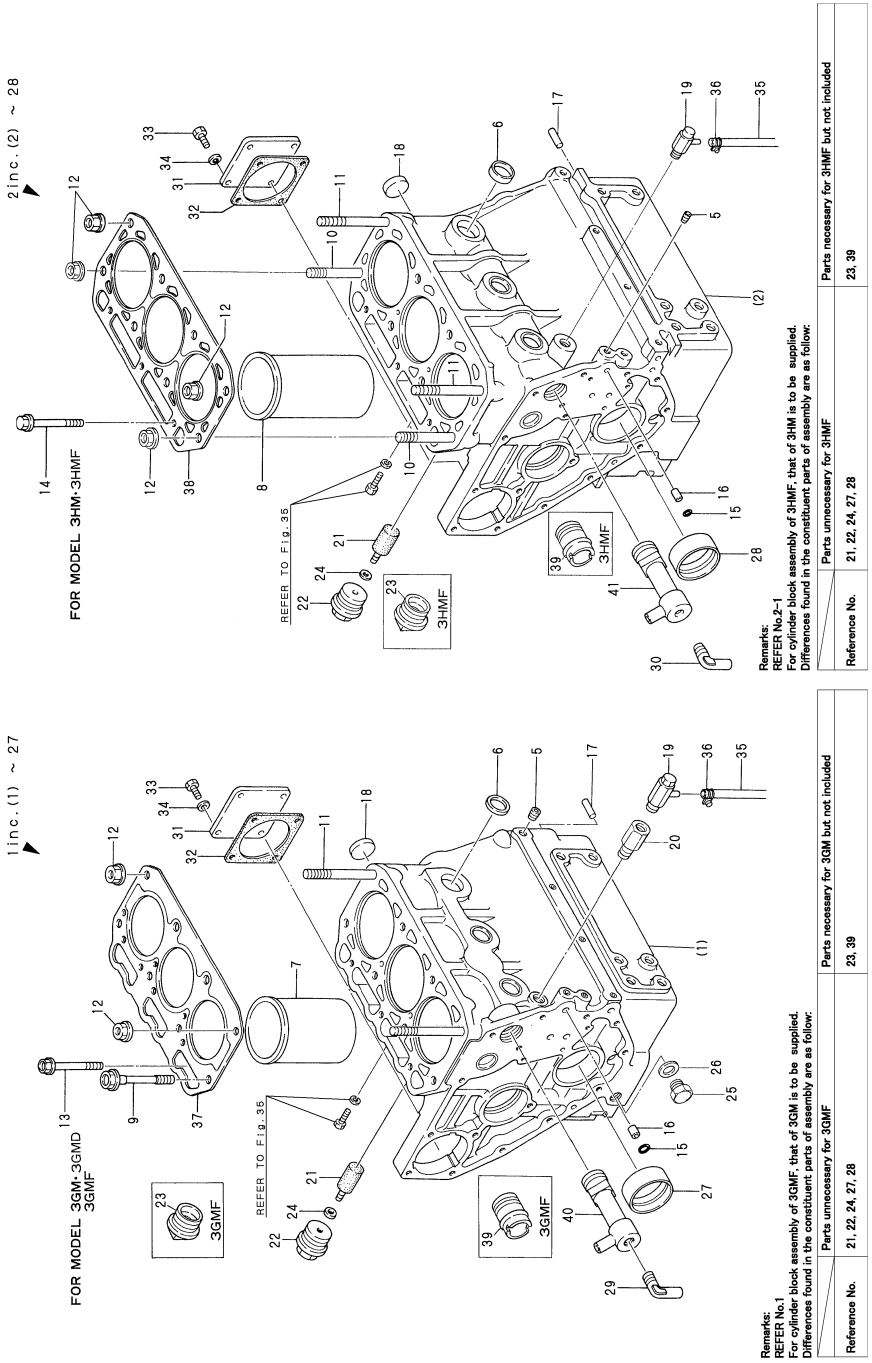

(A)=1GM (B)=2GM(F) (C)=3GM(F) (D)=3GMD (E)=3HM (F)=3HMF

No.	Lev.	Parts No.	Description	Q'ty (A)	(B)	(C)	(D)	(E)	(F)	I	R
1	1	728370-01560	BLOCK ASSY, CYLINDER			1	1				
2	1	728670-01560	BLOCK ASSY, CYLINDER					1			
2-1	1	728670-01561	BLOCK ASSY, CYLINDER					1	1	N	
				(E=EXXX)							
5	2	124060-01050	PLUG, PT1/8			7	7	7	7		
6	2	105311-01090	PLUG, 30			5	5	5	5		
7	2	121450-01100	LINER ASSY, CYLINDER			3	3				
8	2	121575-01100	SLEEVE, CYLINDER					3	3		
9	2	121450-01203	BOLT, HEAD			6	6				
10	2	121575-01200	BOLT, HEAD					6	6		
11	2	121450-01210	BOLT, HEAD			2	2	2	2		
12	2	121450-01220	NUT, CYLINDER HEAD			2	2	8	8		
13	2	121450-01231	BOLT, HEAD			3	3	3			
14	2	129350-01230	BOLT, HEAD					3	3		
15	2	24311-000100	O-RING, 1AP10.0			2	2	2	2		
16	2	105225-01900	GUIDE			2	2	2	2		
17	2	22312-080160	PIN, PARALLEL M8X16			1	1	1	1		
18	2	121450-01990	PLUG, 30			1	1	1	1		
19	2	43600-500290	COCK 1/4			1	1	1	1		
20	2	124085-01880	CONNECTOR			1	1				
21	2	27210-200300	ZINC, SCREW20X30			2	2	2			
22	2	128270-09300	PLUG, NPTF1			2	2	2			
23	2	121750-01920	PLUG, NPTF1			2			2		
24	2	123210-09310	GASKET			2	2	2			
25	2	121450-01960	PLUG, PF1/4			1	1				
26	2	121450-01980	GASKET			1	1				
27	2	121450-02100	BEARING, MAIN			1	1				
28	2	121550-02100	BEARING, MAIN					1	1		
29	1	105583-49910	ELBOW, PT1/4			1	1				
30	1	124070-13300	ELBOW, PT3/8					1			
31	1	124240-01871	COVER			1	1	1	1		
32	1	124240-01882	GASKET			1	1	1	1		
33	1	26116-080142	BOLT 8X14			4	4	4	4		
34	1	23414-080000	GASKET, 8X1.0			4	4	4	4		
35	1	23061-070200	PIPE, 7X 200			1	1	1	1		
36	1	124460-77680	RETAINER			1	1	1	1		
37	1	128370-01330	GASKET, HEAD			1					
37-1	1	128370-01331	GASKET, HEAD			1	1			N	
			(C=E/#00413)								
38	1	121575-01331	GASKET, HEAD					1			
38-1	1	121575-01332	GASKET, HEAD					1	1	N	
				(E=EXXX)				(F=EXXX)			
38-2	1	121575-01333	GASKET, HEAD					1	1	N	
				(E=*1980.11)				(F=*1980.11)			
39	1	124160-49480	JOINT, PIPE			1			1		
40	1	128270-01450	JOINT			1	1				
41	1	128670-01450	JOINT					1			

N:Old $\xleftarrow[\text{No}]{\text{Yes}}$ New, Q:Old $\xleftarrow[\text{Yes}]{\text{No}}$ New, R:Old $\xleftarrow[\text{Yes}]{\text{Yes}}$ New, S:Old $\xleftarrow[\text{No}]{\text{No}}$ New, W:Add, Z:Discontinued, F:Interchangeable by set, K:Q'ty Change

Copyright (C) YANMAR CO., LTD. All RightsReserved.

Fig.3. GEAR HOUSING

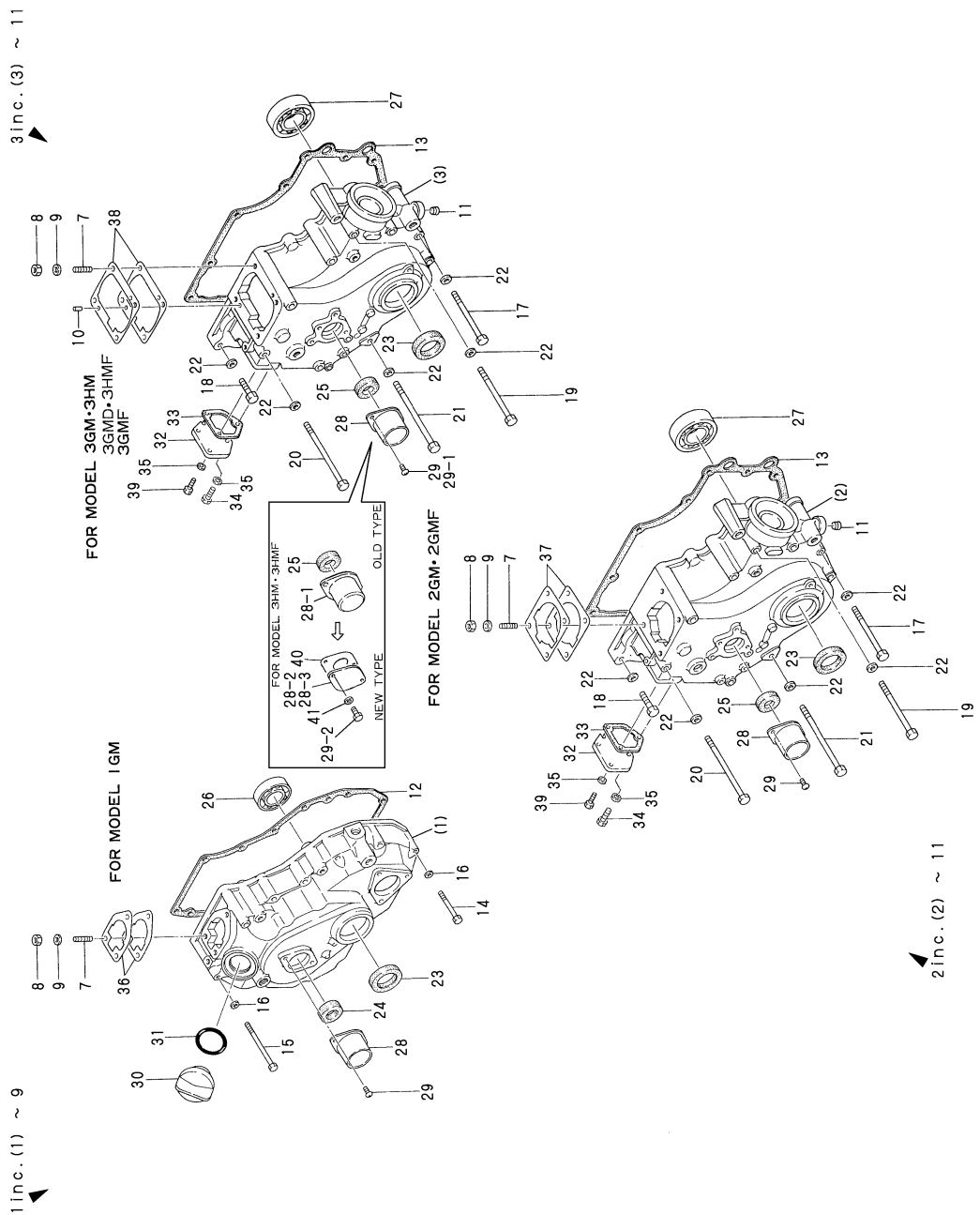

(A)=1GM (B)=2GM(F) (C)=3GM(F) (D)=3GMD (E)=3HM (F)=3HMF

No.	Lev.	Parts No.	Description	Q'ty (A)	(B)	(C)	(D)	(E)	(F)	I	R
1	1	728170-01610	CASE ASSY, GEAR	1							
2	1	728270-01610	CASE ASSY, GEAR		1						
3	1	728370-01610	CASE ASSY, GEAR			1	1	1	1		
7	2	26216-080222	STUD, M8X 22	3	4	4	4	4	4		
7-1	2	121450-01560	STUD, M8X22		4	4	4	4	4		R
		(B=EXXX)	(C=EXXX) (D=EXXX)		(E=EXXX)			(F=EXXX)			
8	2	26716-080002	NUT, M8	3	4	4	4	4	4		
9	2	43400-500410	SEAL WASHER 8S	3	4	4	4	4	4		
9-1	2	23414-080000	GASKET, 8X1.0	3	4						S
	(A=EXXX)	(B=EXXX)									
9-2	2	22212-080000	SPRING WASHER 8		4	4	4	4	4		R
		(B=EXXX)	(C=EXXX) (D=EXXX)		(E=EXXX)			(F=EXXX)			
10	2	22315-040010	SPRING PIN 4X 10			2	2	2	2		
11	2	124060-01050	PLUG, PT1/8		1	1	1	1	1		
12	1	128170-01510	GASKET, GEAR CASE	1							
13	1	121575-01510	GASKET, GEAR CASE		1	1	1	1	1		
14	1	26116-060502	BOLT, M6X 50 PLATED	7							
15	1	26116-060802	BOLT, M6X 80 PLATED	5							
16	1	22117-060000	WASHER, 6	12							
17	1	26116-080852	BOLT, M8X 85 PLATED		5	5	5	5	5		
18	1	26116-080302	BOLT, M8X 30 PLATED		2	2	2	2	2		
19	1	26116-080952	BOLT, M8X 95 PLATED		1	1	1	1	1		
20	1	26116-081152	BOLT, M8X115 PLATED		2	2	2	2	2		
21	1	26116-081202	BOLT, M8X120 PLATED		2	2	2	2	2		
22	1	22137-080000	WASHER, 8		12	12	12	12	12		
23	1	121450-01800	SEAL, OIL	1	1	1	1	1	1		
23-1	1	121450-01801	SEAL, TC25408	1	1	1	1	1	1		N
	(A=EXXX)	(B=EXXX)	(C=EXXX) (D=EXXX)		(E=EXXX)			(F=EXXX)			
24	1	145410-46960	OIL SEAL	1							
25	1	128270-01820	SEAL, SC16286		1	1	1	1	1		
25-1	1	128270-01820	SEAL, SC16286					1	1		Z
					(E=EXXX)			(F=EXXX)			
26	1	24101-060054	BEARING, BALL 6005	1							
27	1	24101-063054	BEARING, BALL 6305		1	1	1	1			
27-1	1	24101-063050	BEARING, BALL 6305C3		1	1	1	1	1		R
		(B=EXXX)	(C=EXXX) (D=EXXX)		(E=EXXX)						
28	1	128170-01830	COVER	1	1	1	1	1			
28-1	1	128670-01830	COVER					1	1		N
					(E=EXXX)						
28-2	1	121023-01550	COVER					1	1		R
					(E=EXXX)			(F=EXXX)			
28-3	1	171016-01550	COVER					1	1		R
					(E=EXXX)			(F=EXXX)			
29	1	26557-060102	SCREW, M6X10	2	2	2	2	2			
29-1	1	28116-060162	BOLT 6X16					2	2		S
					(E=EXXX)						
29-2	1	26116-060122	BOLT, M6X 12 PLATED					2	2		S
					(E=EXXX)			(F=EXXX)			
30	1	124160-01751	COVER, FILLER	1							
31	1	24321-000350	O-RING, 1AG35.0	1							
32	1	121000-01850	COVER, BLOCK		1	1	1	1	1		

N:Old $\overset{\text{Yes}}{\underset{\text{No}}{\leftrightarrow}}$ New, Q:Old $\overset{\text{No}}{\underset{\text{Yes}}{\leftrightarrow}}$ New, R:Old $\overset{\text{Yes}}{\underset{\text{Yes}}{\leftrightarrow}}$ New, S:Old $\overset{\text{No}}{\underset{\text{No}}{\leftrightarrow}}$ New, W:Add, Z:Discontinued, F:Interchangeable by set, K:Q'ty Change

++ CONTINUE ++

Copyright (C) YANMAR CO., LTD. All RightsReserved.

Fig.3. GEAR HOUSING

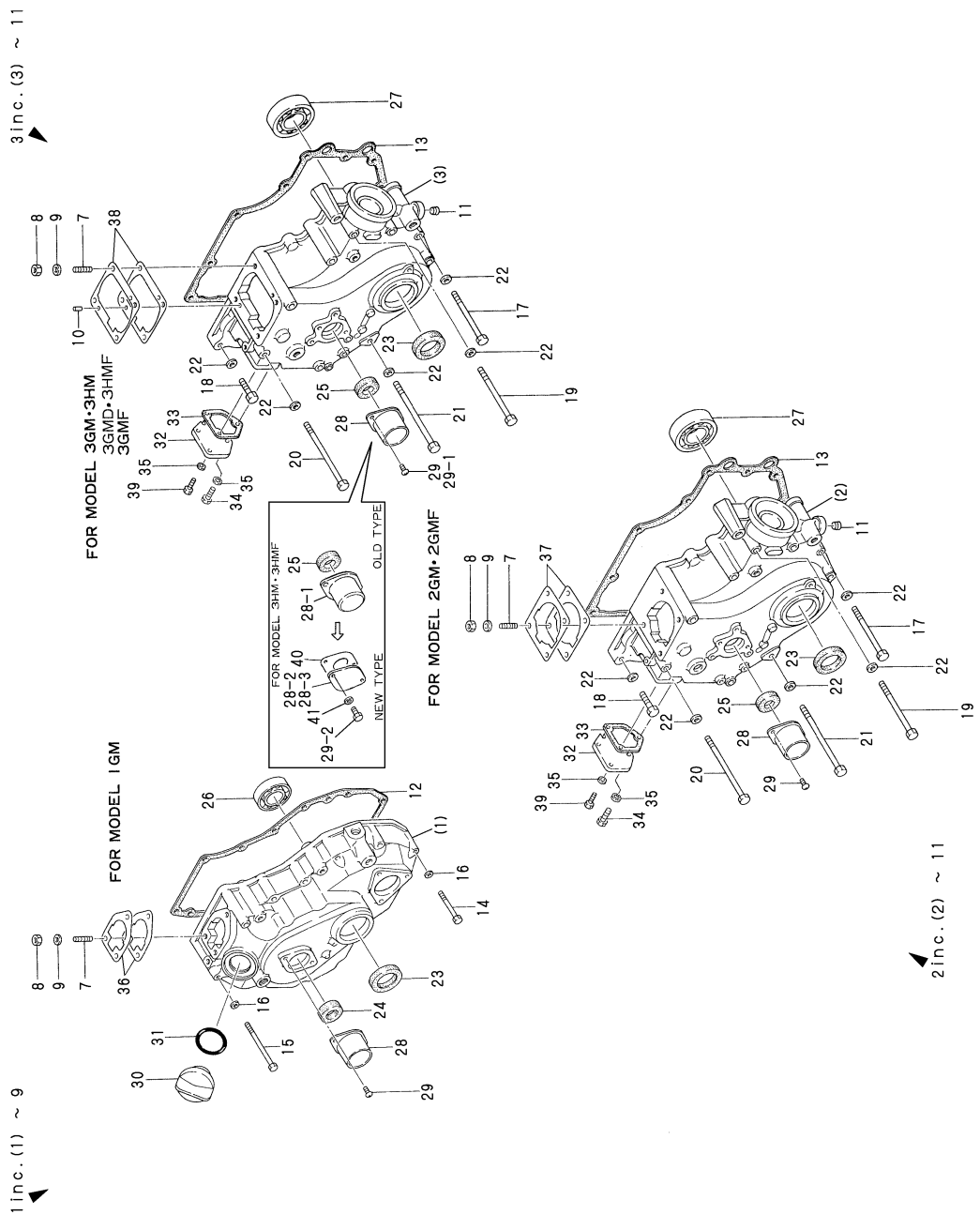

(A)=1GM (B)=2GM(F) (C)=3GM(F) (D)=3GMD (E)=3HM (F)=3HMF

No.	Lev.	Parts No.	Description	Q'ty (A)	(B)	(C)	(D)	(E)	(F)	I	R
33	1	121575-01860	GASKET		1	1	1	1	1		
34	1	26116-060142	BOLT, M6X 14 PLATED		3	3		3			
34-1	1	26116-060142	BOLT, M6X 14 PLATED		1	1	1	1	1	K	
		(B=EXXX)	(C=EXXX)		(E=EXXX)						
35	1	22217-060000	WASHER, SPRING 6		3	3	3	3	3		
36	1	104271-01950	SHIM SET,0.2X3,0.3X2	1							
37	1	124950-01951	SHIM SET, ADJUSTING		1						
38	1	121450-01951	SHIM SET, ADJUSTING			1	1	1	1		
39	1	26116-060162	BOLT, M6X 16 PLATED		2	2	2	2	2	W	
		(B=EXXX)	(C=EXXX) (D=EXXX)		(E=EXXX)			(F=EXXX)			
40	1	128695-01840	GASKET					1	1	W	
					(E=EXXX)			(F=EXXX)			
41	1	22137-060000	WASHER, 6					2	2	W	
					(E=EXXX)			(F=EXXX)			

N:Old $\xleftarrow[\text{No}]{\text{Yes}}$ New, Q:Old $\xleftarrow[\text{Yes}]{\text{No}}$ New, R:Old $\xleftarrow[\text{Yes}]{\text{Yes}}$ New, S:Old $\xleftarrow[\text{No}]{\text{No}}$ New, W:Add, Z:Discontinued, F:Interchangeable by set, K:Q'ty Change

Copyright (C) YANMAR CO., LTD. All RightsReserved.

Fig.4. FLYWHEEL HOUSING

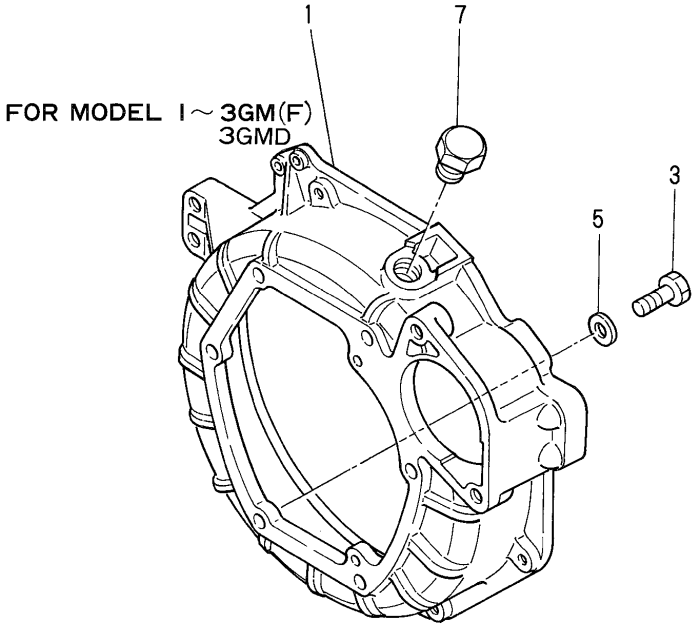

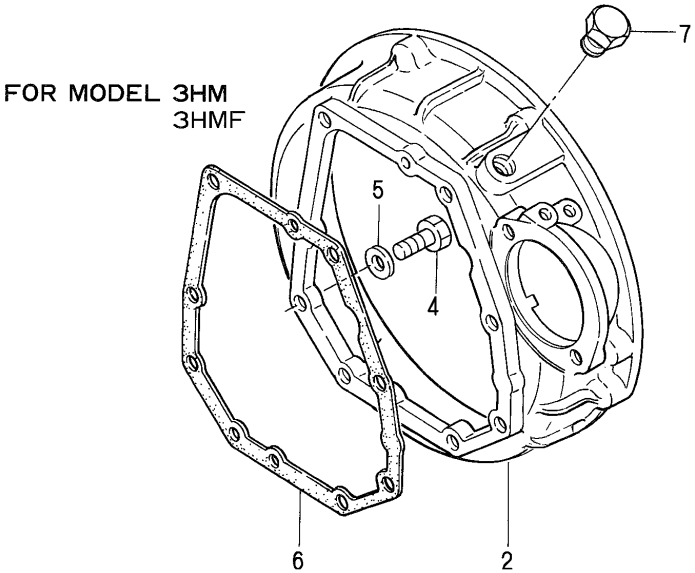

(A)=1GM (B)=2GM(F) (C)=3GM(F) (D)=3GMD (E)=3HM (F)=3HMF

No.	Lev.	Parts No.	Description	Q'ty (A)	(B)	(C)	(D)	(E)	(F)	I	R
1	1	128170-01600	FLANGE, MOUNTING	1	1	1	1				
2	1	121574-01600	FLANGE, MOUNTING					1	1		
3	1	26116-100252	BOLT, M10X 25 PLATED	6	6	6	6				
4	1	26116-100302	BOLT, M10X 30 PLATED					8	8		
5	1	22117-100000	WASHER, 10	6	6	6	6	8	8		
6	1	121574-01630	GASKET					1	1		
7	1	23883-180002	PLUG, 18	1	1	1		1			
7-1	1	23887-180002	PLUG, 18	1	1	1	1	1	1	R	
	(A=EXXX)		(B=EXXX) (C=EXXX)		(E=EXXX)						

N:Old $\xleftrightarrow[\text{No}]{\text{Yes}}$ New, Q:Old $\xleftrightarrow[\text{Yes}]{\text{No}}$ New, R:Old $\xleftrightarrow[\text{Yes}]{\text{Yes}}$ New, S:Old $\xleftrightarrow[\text{No}]{\text{No}}$ New, W:Add, Z:Discontinued, F:Interchangeable by set, K:Q'ty Change

Copyright (C) YANMAR CO., LTD. All RightsReserved.

Fig.5. LUB. OIL SUMP

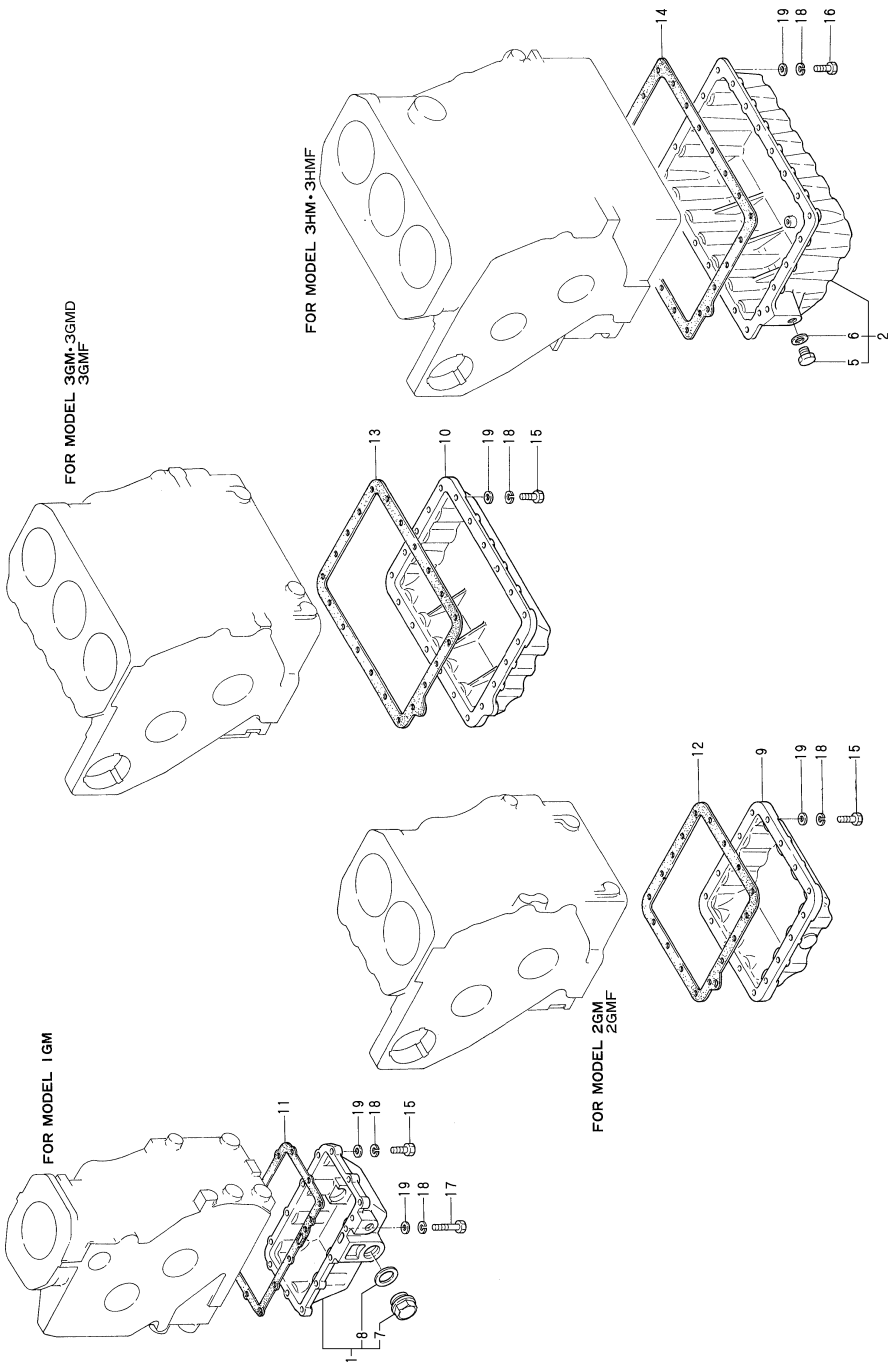

(A)=1GM (B)=2GM(F) (C)=3GM(F) (D)=3GMD (E)=3HM (F)=3HMF

No.	Lev.	Parts No.	Description	Q'ty (A)	(B)	(C)	(D)	(E)	(F)	I	R
1	1	728170-01540	SUMP ASSY, OIL	1							
2	1	721575-01540	SUMP ASSY, OIL					1	1		
5	2	23893-020002	PLUG, G1/4					1	1		
5-1	2	23894-020002	PLUG, G1/4		(E=EXXX)			1 (F=EXXX)	1	R	
6	2	23414-130000	GASKET, 13X1.0					1	1		
7	2	105430-01690	PLUG	1							
8	2	43400-500570	SEAL WASHER 24S	1							
9	1	128270-01720	SUMP, OIL		1						
10	1	128370-01720	SUMP, OIL			1	1				
11	1	128170-01750	GASKET, OIL SUMP	1							
12	1	124000-01750	GASKET, OIL SUMP		1						
13	1	121450-01751	GASKET, OIL SUMP			1	1				
14	1	121575-01750	GASKET, OIL SUMP					1	1		
15	1	26116-060202	BOLT, M6X 20 PLATED	12	17	21	21		1		
16	1	26116-060252	BOLT, M6X 25 PLATED					23	23		
17	1	26116-060352	BOLT, M6X 35 PLATED	1							
18	1	22217-060000	WASHER, SPRING 6	13	17	21	21	23	23		
19	1	22137-060000	WASHER, 6	13	17	21	21	23	23		

N:Old ←Yes/No→ New, Q:Old ←No/Yes→ New, R:Old ←Yes/Yes→ New, S:Old ←No/No→ New, W:Add, Z:Discontinued, F:Interchangeable by set, K:Q'ty Change

Copyright (C) YANMAR CO., LTD. All RightsReserved.

Fig.6. MAIN METAL HOUSING(1,2GM(F))

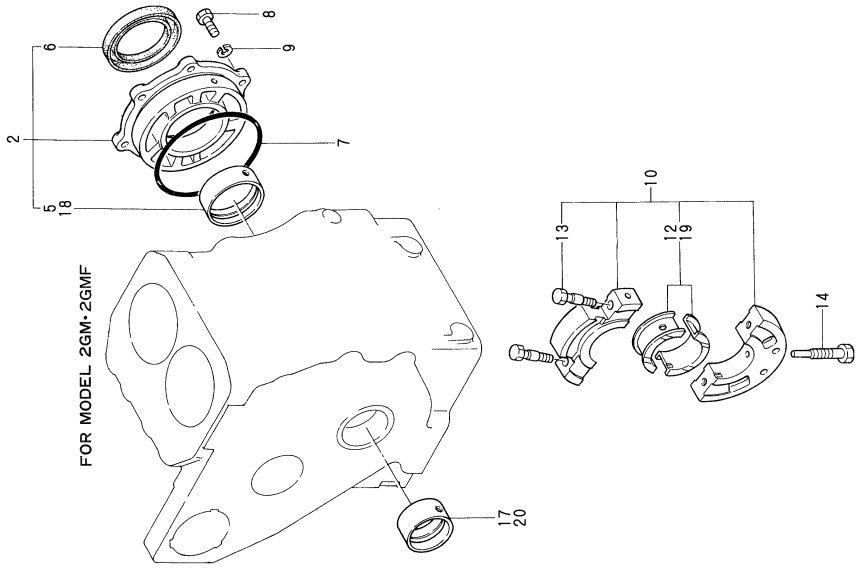

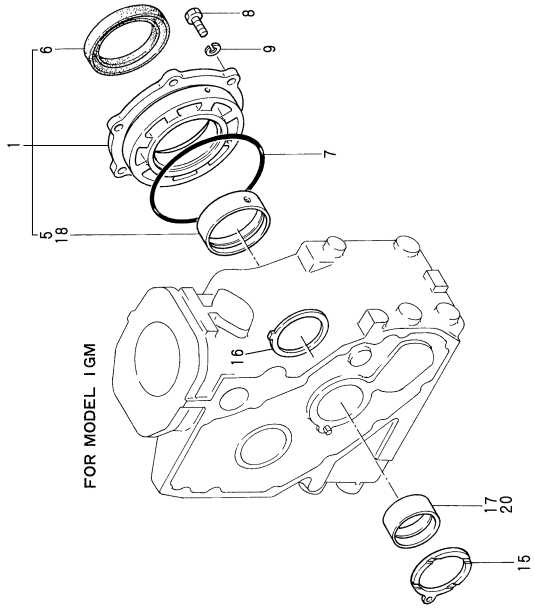

(A)=1GM (B)=2GM(F) (C)=3GM(F) (D)=3GMD (E)=3HM (F)=3HMF

No.	Lev.	Parts No.	Description	Q'ty (A)	(B)	(C)	(D)	(E)	(F)	I	R
1	1	728170-02500	HOUSING ASSY, METAL	1							
2	1	721450-02500	HOUSING ASSY, METAL		1						
5	2	121450-02110	BEARING, MAIN	1	1						
6	2	124450-02220	SEAL, HTCX60X82X9	1	1						
6-1	2	124085-02220	SEAL, OIL	1	1					N	
	(A=EXXX)	(B=EXXX)									
7	1	105225-02020	O-RING	1	1						
8	1	26116-080202	BOLT, M8X 20 PLATED	6	6						
9	1	22217-080000	WASHER, SPRING 8	6	6						
10	1	721450-02611	HOUSING ASSY		1						
12	2	121450-02160	BEARING, MAIN		1						
13	2	121450-02071	BOLT		2						
14	1	105225-02300	BOLT		1						
15	1	128170-02090	BEARING, THRUST	1							
16	1	104200-02110	BEARING, THRUST	1							
17	1	121450-02100	BEARING, MAIN	1	1						
18	1	121450-02320	METAL ASSY, 0.25	1	1						
19	1	121450-02370	BEARING, 0.25 US		1						
20	1	121450-02310	BEARING, 0.25 US	1	1						

N:Old $\overset{\text{Yes}}{\underset{\text{No}}{\leftrightarrows}}$ New, Q:Old $\overset{\text{No}}{\underset{\text{Yes}}{\leftrightarrows}}$ New, R:Old $\overset{\text{Yes}}{\underset{\text{Yes}}{\leftrightarrows}}$ New, S:Old $\overset{\text{No}}{\underset{\text{No}}{\leftrightarrows}}$ New, W:Add, Z:Discontinued, F:Interchangeable by set, K:Q'ty Change

Copyright (C) YANMAR CO., LTD. All RightsReserved.

Fig.7. MAIN METAL HOUSING

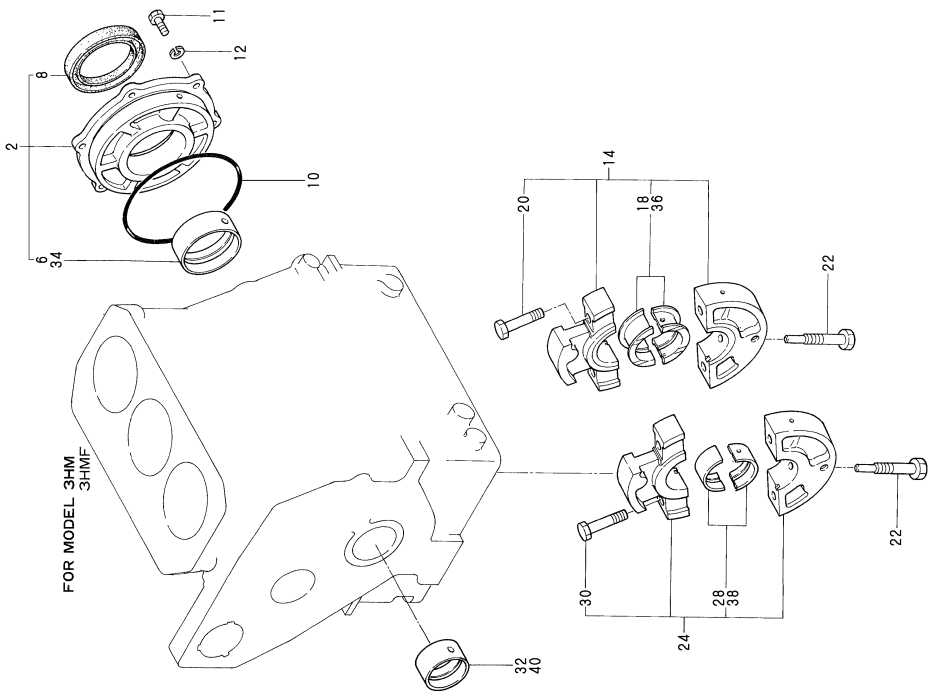

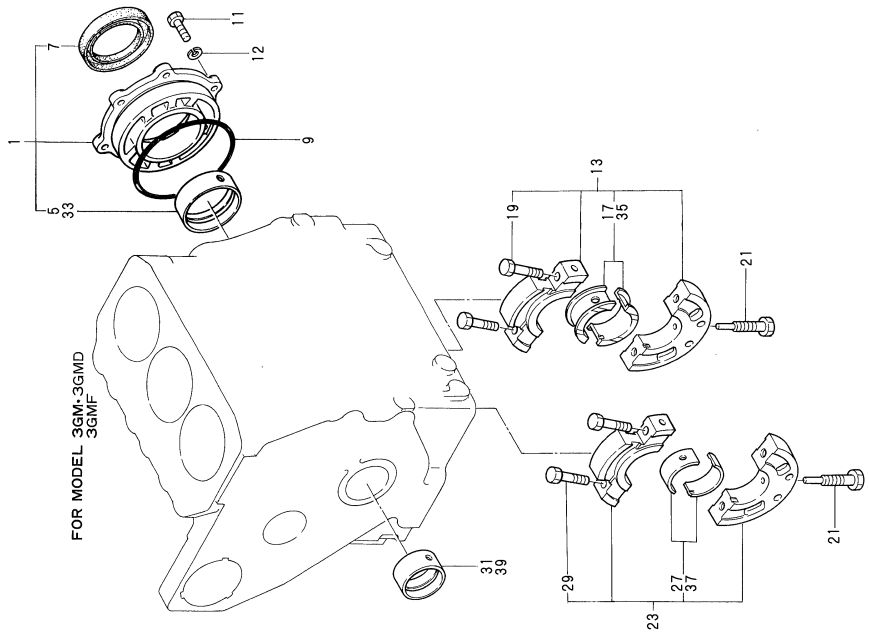

(A)=1GM (B)=2GM(F) (C)=3GM(F) (D)=3GMD (E)=3HM (F)=3HMF

No.	Lev.	Parts No.	Description	Q'ty (A)	(B)	(C)	(D)	(E)	(F)	I	R
1	1	721450-02500	HOUSING ASSY, METAL			1	1				
2	1	721550-02500	HOUSING ASSY, METAL					1	1		
5	2	121450-02110	BEARING, MAIN			1	1				
6	2	121550-02110	BEARING, MAIN					1	1		
7	2	124450-02220	SEAL, HTCX60X82X9			1	1				
7-1	2	124085-02220	SEAL, OIL			1	1			N	
			(C=EXXX) (D=EXXX)								
8	2	124060-02220	SEAL, OIL					1	1		
8-1	2	121551-02220	SEAL, OIL					1	1	N	
				(E=EXXX)				(F=EXXX)			
9	1	105225-02020	O-RING			1	1				
10	1	24341-001350	O-RING, 1AS135.0					1	1		
11	1	26116-080202	BOLT, M8X 20 PLATED			6	6	6	6		
12	1	22217-080000	WASHER, SPRING 8			6	6	6	6		
13	1	721450-02611	HOUSING ASSY			1	1				
14	1	721550-02610	HOUSING ASSY, METAL					1	1		
17	2	121450-02160	BEARING, MAIN			1	1				
18	2	721550-02800	BEARING, MAIN					1	1		
19	2	121450-02071	BOLT			2	2				
20	2	121250-02070	BOLT					2	2		
21	1	105225-02300	BOLT			2	2				
22	1	121550-02300	BOLT					2	2		
23	1	721450-02621	HOUSING ASSY			1	1				
24	1	721550-02620	HOUSING ASSY, METAL					1	1		
27	2	121450-02170	BEARING, MAIN			1	1				
28	2	721550-02810	BEARING, MAIN					1	1		
29	2	121450-02071	BOLT			2	2				
30	2	121250-02070	BOLT					2	2		
31	1	121450-02100	BEARING, MAIN			1	1				
32	1	121520-02100	BEARING, MAIN					1	1		
33	1	121450-02320	METAL ASSY, 0.25			1	1				
34	1	121550-02320	BEARING, 0.25 US					1	1		
35	1	121450-02370	BEARING, 0.25 US			1	1				
36	1	721550-02830	BEARING, 0.25 US					1	1		
37	1	121450-02380	BEARING, 0.25 US			1	1				
38	1	721550-02820	BEARING, 0.25 US					1	1		
39	1	121450-02310	BEARING, 0.25 US			1	1				
40	1	121550-02310	BEARING, 0.25 US					1	1		

N:Old ←Yes/No→ New, Q:Old ←No/Yes→ New, R:Old ←Yes/Yes→ New, S:Old ←No/No→ New, W:Add, Z:Discontinued, F:Interchangeable by set, K:Q'ty Change

Copyright (C) YANMAR CO., LTD. All RightsReserved.

Fig.8. BREATHER

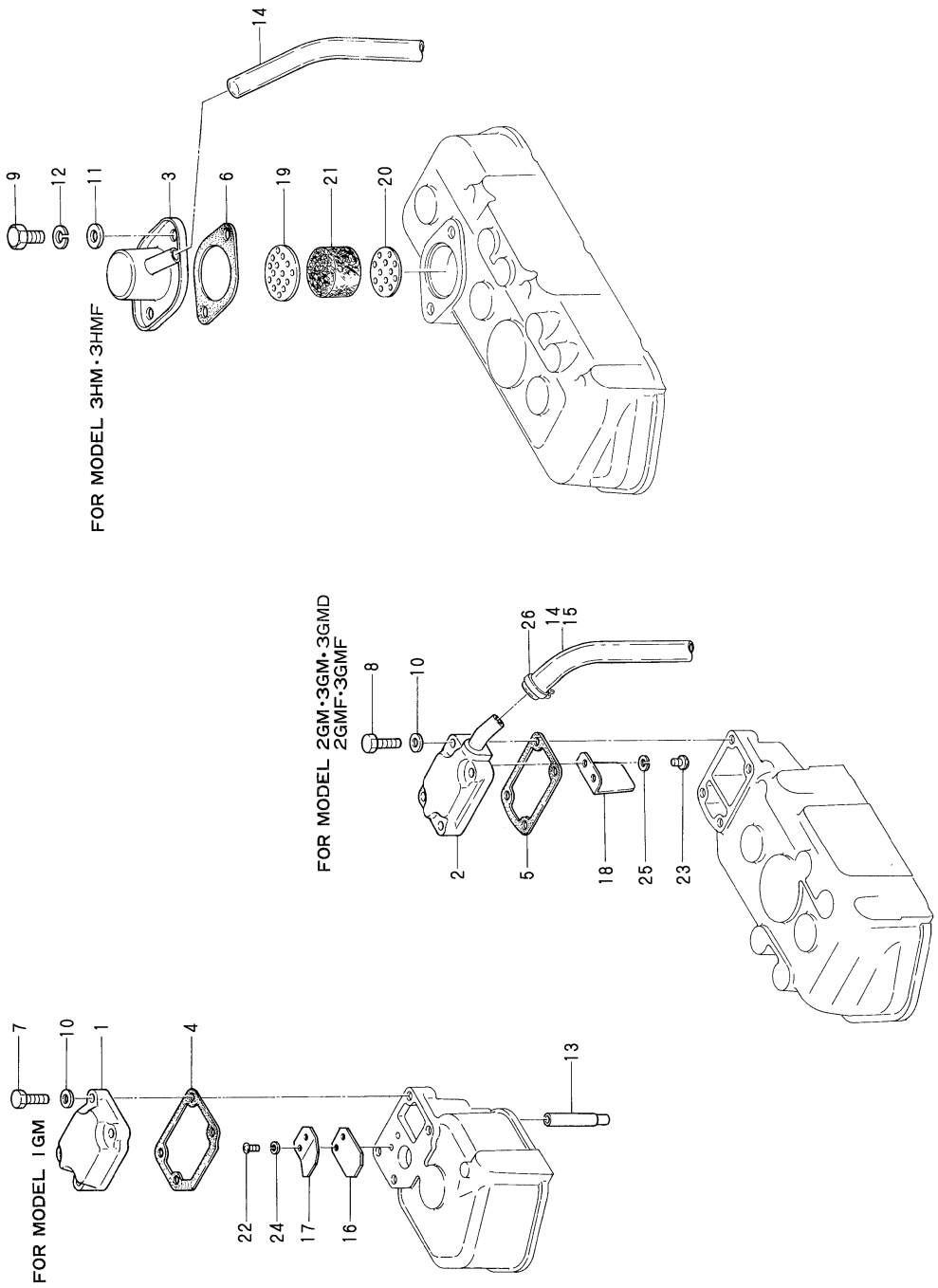

(A)=1GM (B)=2GM(F) (C)=3GM(F) (D)=3GMD (E)=3HM (F)=3HMF

No.	Lev.	Parts No.	Description	Q'ty (A)	(B)	(C)	(D)	(E)	(F)	I	R
1	1	128170-03020	COVER, BREATHER	1							
2	1	121000-03020	COVER, BREATHER		1	1	1				
3	1	128670-03010	BODY, BREATHER					1	1		
4	1	128170-03070	GASKET	1							
5	1	121000-03070	GASKET		1	1	1				
6	1	121450-03071	GASKET					1	1		
7	1	26116-060202	BOLT, M6X 20 PLATED	4							
8	1	26116-060252	BOLT, M6X 25 PLATED		4	4	4				
9	1	26116-080142	BOLT 8X14					2	2		
10	1	22117-060000	WASHER, 6	4	4	4	4				
11	1	22137-080000	WASHER, 8					2	2		
12	1	22217-080000	WASHER, SPRING 8					2	2		
13	1	128170-03200	PIPE , BREATHER	1							
14	1	124000-03200	PIPE , BREATHER		1			1	1		
15	1	121000-03200	PIPE , BREATHER			1	1				
16	1	101158-03061	VALVE	1							
17	1	101158-03111	RETAINER	1							
18	1	121000-03080	PLATE, SHELTER		1	1	1				
19	1	128670-03020	PLATE, BAFFLE					1	1		
20	1	128670-03030	PLATE, BAFFLE					1	1		
21	1	128670-03040	WOOL, STEEL					1	1		
22	1	26557-040082	SCREW, M4X 8	2							
23	1	26557-050102	SCREW, M5X10		2	2	2				
24	1	22217-040000	WASHER, SPRING 4	2							
25	1	22217-050000	WASHER, SPRING 5		2	2	2				
26	1	23080-013000	CLAMP, 13		2	2	2				

N:Old $\overset{\text{Yes}}{\underset{\text{No}}{\leftrightarrows}}$ New, Q:Old $\overset{\text{No}}{\underset{\text{Yes}}{\leftrightarrows}}$ New, R:Old $\overset{\text{Yes}}{\underset{\text{Yes}}{\leftrightarrows}}$ New, S:Old $\overset{\text{No}}{\underset{\text{No}}{\leftrightarrows}}$ New, W:Add, Z:Discontinued, F:Interchangeable by set, K:Q'ty Change

Copyright (C) YANMAR CO., LTD. All RightsReserved.

Fig.9. ENGINE LIFTER

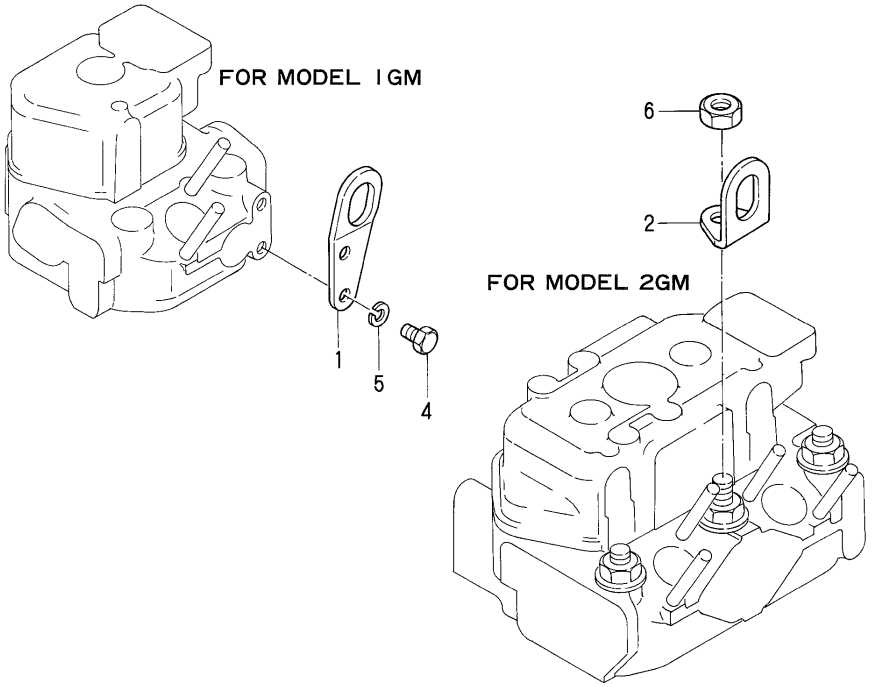

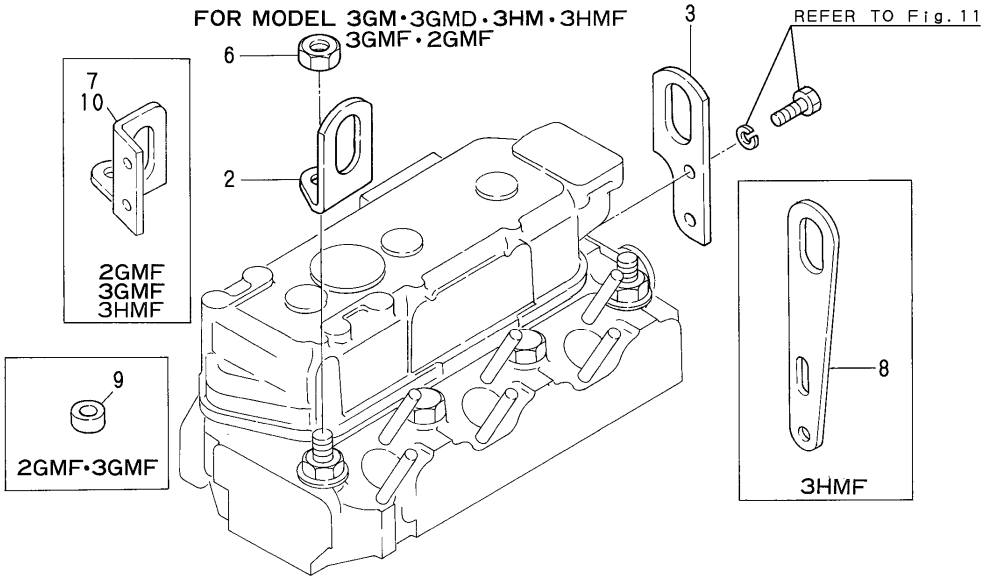

(A)=1GM (B)=2GM(F) (C)=3GM(F) (D)=3GMD (E)=3HM (F)=3HMF

No.	Lev.	Parts No.	Description	Q'ty (A)	(B)	(C)	(D)	(E)	(F)	I	R
1	1	128170-07230	LIFTER	1							
2	1	121575-07230	LIFTER		1	1	1	1			
3	1	121575-07240	LIFTER		1	1	1	1			
4	1	26116-080142	BOLT 8X14	2							
5	1	22217-080000	WASHER, SPRING 8	2							
6	1	26776-120002	NUT, LOCK M12		1	1	1	1	1		
7	1	128695-07230	LIFTER						1		
8	1	124736-07900	LIFTER						1		
9	1	123372-03150	SPACER		2	2					
10	1	128695-07230	LIFTER		1	1					

N:Old $\overset{\text{Yes}}{\underset{\text{No}}{\leftrightarrows}}$ New, Q:Old $\overset{\text{No}}{\underset{\text{Yes}}{\leftrightarrows}}$ New, R:Old $\overset{\text{Yes}}{\underset{\text{Yes}}{\leftrightarrows}}$ New, S:Old $\overset{\text{No}}{\underset{\text{No}}{\leftrightarrows}}$ New, W:Add, Z:Discontinued, F:Interchangeable by set, K:Q'ty Change

Copyright (C) YANMAR CO., LTD. All RightsReserved.

Fig.10. MOUNTING FOOT

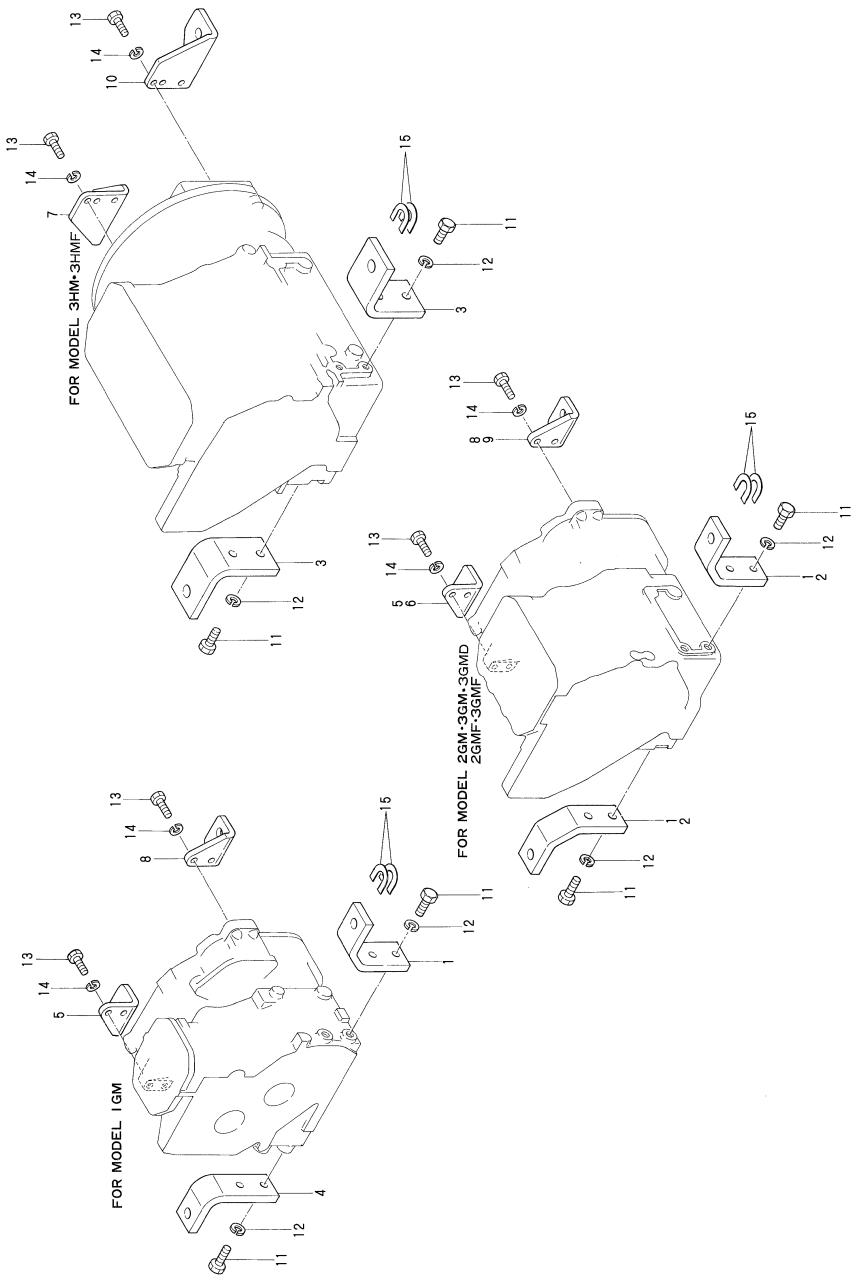

(A)=1GM (B)=2GM(F) (C)=3GM(F) (D)=3GMD (E)=3HM (F)=3HMF

No.	Lev.	Parts No.	Description	Q'ty (A)	(B)	(C)	(D)	(E)	(F)	I	R
1	1	128170-08100	FOOT	1	2	2	2				
2	1	128370-08100	FOOT			2					1
3	1	128670-08100	FOOT, MOUNTING					2	2		
4	1	128170-08110	FOOT	1							
5	1	128170-08120	FOOT	1	1	1	1				
6	1	128370-08120	FOOT			1					1
7	1	128670-08120	FOOT, MOUNTING					1	1		
8	1	128170-08130	FOOT	1	1	1	1				
9	1	128370-08130	FOOT			1					1
10	1	128670-08130	FOOT, MOUNTING					1	1		
11	1	26116-120302	BOLT, M12X 30 PLATED	4	4	4	4	4	4		
12	1	22217-120000	WASHER, SPRING 12	4	4	4	4	4	4		
13	1	26116-100302	BOLT, M10X 30 PLATED	4	4	4	4	4	4		
14	1	22217-100000	WASHER, SPRING 10	4	4	4	4	4	4		
15	1	124223-92800	SHIM SET, ADJUSTING	4	4	4		4		Z	

(A=*1980.07) (B=E/#00018) (C=E/#00011) (E=E/#00018)

Remarks
(1)3GM

N:Old $\xleftrightarrow[\text{No}]{\text{Yes}}$ New, Q:Old $\xleftrightarrow[\text{Yes}]{\text{No}}$ New, R:Old $\xleftrightarrow[\text{Yes}]{\text{Yes}}$ New, S:Old $\xleftrightarrow[\text{No}]{\text{No}}$ New, W:Add, Z:Discontinued, F:Interchangeable by set, K:Q'ty Change

Copyright (C) YANMAR CO., LTD. All RightsReserved.

Fig.11. CYLINDER HEAD

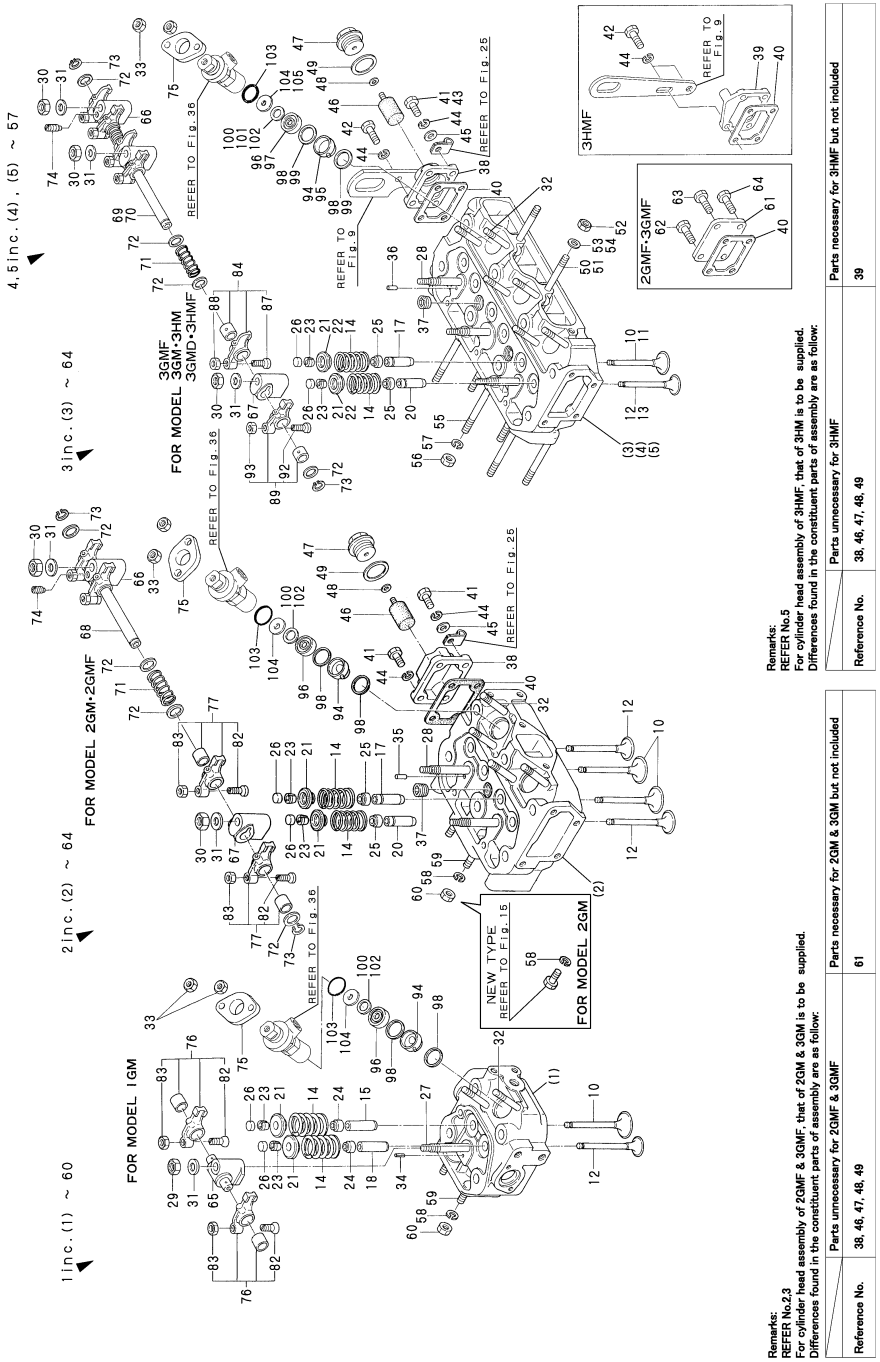

(A)=1GM (B)=2GM(F) (C)=3GM(F) (D)=3GMD (E)=3HM (F)=3HMF

No.	Lev.	Parts No.	Description	Q'ty (A)	(B)	(C)	(D)	(E)	(F)	I	R
1	1	728170-11700	HEAD ASSY, CYLINDER	1							
2	1	728270-11700	HEAD ASSY, CYLINDER		1						
3	1	728370-11700	HEAD ASSY, CYLINDER			1	1				
4	1	721575-11701	HEAD ASSY, CYLINDER					1			
5	1	721575-11701	HEAD ASSY, CYLINDER						1		
10	2	105225-11100	VALVE, INTAKE	1	2	3	3				
11	2	104211-11100	VALVE, INTAKE					3	3		
12	2	105225-11110	VALVE, EXHAUST	1	2	3	3				
13	2	104211-11110	VALVE, EXHAUST					3	3		
14	2	121575-11121	SPRING, VALVE	2	4	6	6	6	6		
15	2	105430-11160	GUIDE, VALVE	1							
17	2	124060-11800	GUIDE, VALVE		2	3	3	3	3		
18	2	105430-11160	GUIDE, VALVE	1							
18-1	2	128170-11160	GUIDE, VALVE	1						R	
	(A=EXXX)										
20	2	124060-11810	GUIDE, VALVE		2	3	3	3	3		
21	2	104200-11180	RETAINER, SPRING	2	4	6	6				
22	2	104211-11180	RETAINER, SPRING					6	6		
23	2	27310-070000	COTTER 7	2	4	6	6	6	6		
23-1	2	27310-070001	COTTER, 7	2	4	6	6	6	6	N	
	(A=EXXX)	(B=EXXX)	(C=EXXX) (D=EXXX)		(E=EXXX)			(F=EXXX)			
24	2	128170-11340	SEAL, VALVE STEM	2							
25	2	124950-11340	SEAL, VALVE STEM		4	6	6	6	6		
26	2	104211-11370	CAP, VALVE	2	4	6	6	6	6		
27	2	128170-11350	STUD	1							
28	2	105225-11350	STUD		2	3	3	3	3		
29	2	26736-100002	NUT, M10	1							
30	2	26776-100002	NUT, LOCK M10		2	3	3	3	3		
31	2	22137-100000	WASHER, 10	1	2	3	3	3	3		
32	2	26216-080622	STUD, M8X 62	2	4	6		6			
32-1	2	26216-080652	STUD, M8X 65		4	6	6		6	S	
		(B=EXXX)	(C=EXXX)								
32-2	2	26216-080702	STUD, M8X 70					6		S	
					(E=EXXX)						
33	2	26716-080002	NUT, M8	2	4	6	6	6	6		
34	2	22351-040008	PIN, SPRING 4.0X 8	1							
34-1	2	22351-040010	PIN, SPRING 4.0X10	1						R	
	(A=EXXX)										
35	2	121000-11050	PIN, 4.5X12		1	1	1				
36	2	121000-11050	PIN, 4.5X12					1	1	W	
					(E=E/#00019)			(F=*1980.07)			
37	2	23873-030000	PLUG, R03		1	2	2	2	2		
38	2	121575-11670	COVER, HEAD		1	1	1	1			
39	2	128695-11670	COVER						1		
40	2	121450-11680	GASKET		1	1	1	1	1		
41	2	26116-080202	BOLT, M8X 20 PLATED		4	2	2		2		
42	2	26116-080252	BOLT, M8X 25 PLATED			2	2	2	2		
43	2	26116-080222	BOLT, M8X 22 PLATED					2			
44	2	22217-080000	WASHER, SPRING 8		4	4		3	3		
45	2	22117-080000	WASHER, 8		1	1	1	1			
45-1	2	22137-080000	WASHER, 8					1		S	

N:Old $\xleftarrow[\text{No}]{\text{Yes}}$ New, Q:Old $\xleftarrow[\text{Yes}]{\text{No}}$ New, R:Old $\xleftarrow[\text{Yes}]{\text{Yes}}$ New, S:Old $\xleftarrow[\text{No}]{\text{No}}$ New, W:Add, Z:Discontinued, F:Interchangeable by set, K:Q'ty Change

++ CONTINUE ++

Copyright (C) YANMAR CO., LTD. All RightsReserved.

Fig.11. CYLINDER HEAD

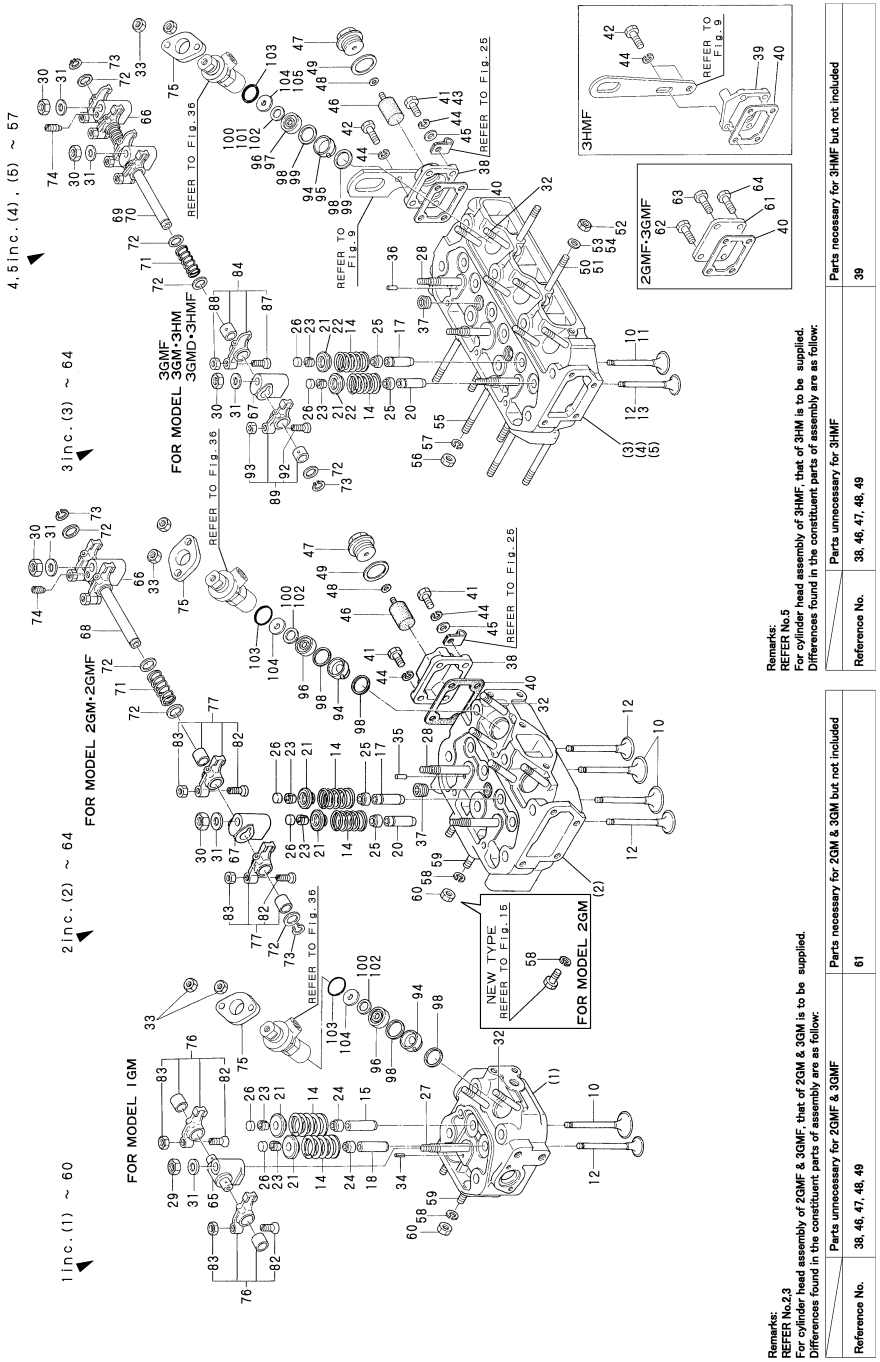

(A)=1GM (B)=2GM(F) (C)=3GM(F) (D)=3GMD (E)=3HM (F)=3HMF

No.	Lev.	Parts No.	Description	Q'ty (A)	(B)	(C)	(D)	(E)	(F)	I	R
					(E=EXXX)						
46	2	27210-200300	ZINC, SCREW20X30		1	1	1	1			
47	2	124220-09320	PLUG		1						
47-1	2	122780-09320	PLUG		1	1	1	1		R	
		(B=*1980.07)									
48	2	123210-09310	GASKET		1	1	1	1			
49	2	23414-250000	GASKET, 25X1.0		1	1	1	1			
50	2	26216-080552	STUD, M8X 55			2	2				
51	2	121250-11550	BOLT					2	2		
52	2	26716-080002	NUT, M8			2	2	2	2		
53	2	22137-080000	WASHER, 8					2	2		
54	2	22117-080000	WASHER, 8			2	2				
55	2	26213-080802	STUD, M8X 80			6	6	6			
56	2	26713-080002	NUT, M8			6	6	6			
57	2	22217-080000	WASHER, SPRING 8			6	6	6			
58	2	22217-080000	WASHER, SPRING 8	3	3						
59	2	26213-080182	STUD, M8X 18	3	3						
60	2	26713-080002	NUT, M8	3	3						
61	2	121450-11670	COVER, HEAD		1	1					
62	2	26116-080282	BOLT, M8X 28 PLATED		2	2					
63	2	26116-080122	BOLT, M8X 12 PLATED		1	1					
64	2	121250-01710	BOLT, SUMP M8X14		1	1					
65	1	128170-11290	SUPPORT, ROCKER ARM	1							
66	1	121450-11260	SUPPORT, ROCKER ARM		1	1	1	1	1		
67	1	121450-11270	SUPPORT, ROCKER ARM		1	2	2	2	2		
68	1	124000-11240	SHAFT, ROCKER ARM		1						
69	1	121450-11240	SHAFT ASSY, ROCKER			1	1				
70	1	121550-11240	SHAFT ASSY, ROCKER					1	1		
71	1	121550-11280	SPRING		1	2	2	2	2		
72	1	121550-11290	WASHER		4	6	6	6	6		
73	1	22242-000140	RING, 14		2	2	2	2	2		
74	1	26921-080102	SCREW, M8X10		1	1	1	1	1		
75	1	101147-11900	RETAINER	1	2	3	3	3	3		
76	1	728170-11650	ARM ASSY, ROCKER	2							
77	1	724085-11650	ARM ASSY, ROCKER		4						
82	2	101158-11230	SCREW, VALVE ADJUST	2	4						
83	2	26756-080002	NUT, LOCK M8	2	4						
84	1	721450-11650	ARM ASSY, ROCKER			3	3	3	3		
87	2	101158-11230	SCREW, VALVE ADJUST			3	3	3	3		
88	2	26756-080002	NUT, LOCK M8			3	3	3	3		
89	2	721450-11660	ARM ASSY, ROCKER			3	3	3	3		
92	2	101158-11230	SCREW, VALVE ADJUST			3	3	3	3		
93	2	26756-080002	NUT, LOCK M8			3	3	3	3		
94	1	121000-11420	CHAMBER	1	2	3	3				
95	1	121575-11421	CHAMBER					3	3		
96	1	124950-11410	CHAMBER	1	2	3					
96-1	1	128275-11410	CHAMBER	1	2	3	3			F	
	(A=*1980.11)		(B=*1980.11) (C=*1980.11)								
97	1	121550-11411	CHAMBER					3			
97-1	1	128695-11410	CHAMBER					3	3	F	
					(E=*1980.11)						

N:Old $\xleftarrow[\text{No}]{\text{Yes}}$ New, Q:Old $\xleftarrow[\text{Yes}]{\text{No}}$ New, R:Old $\xleftarrow[\text{Yes}]{\text{Yes}}$ New, S:Old $\xleftarrow[\text{No}]{\text{No}}$ New, W:Add, Z:Discontinued, F:Interchangeable by set, K:Q'ty Change

++ CONTINUE ++

Copyright (C) YANMAR CO., LTD. All RightsReserved.

Fig.11. CYLINDER HEAD

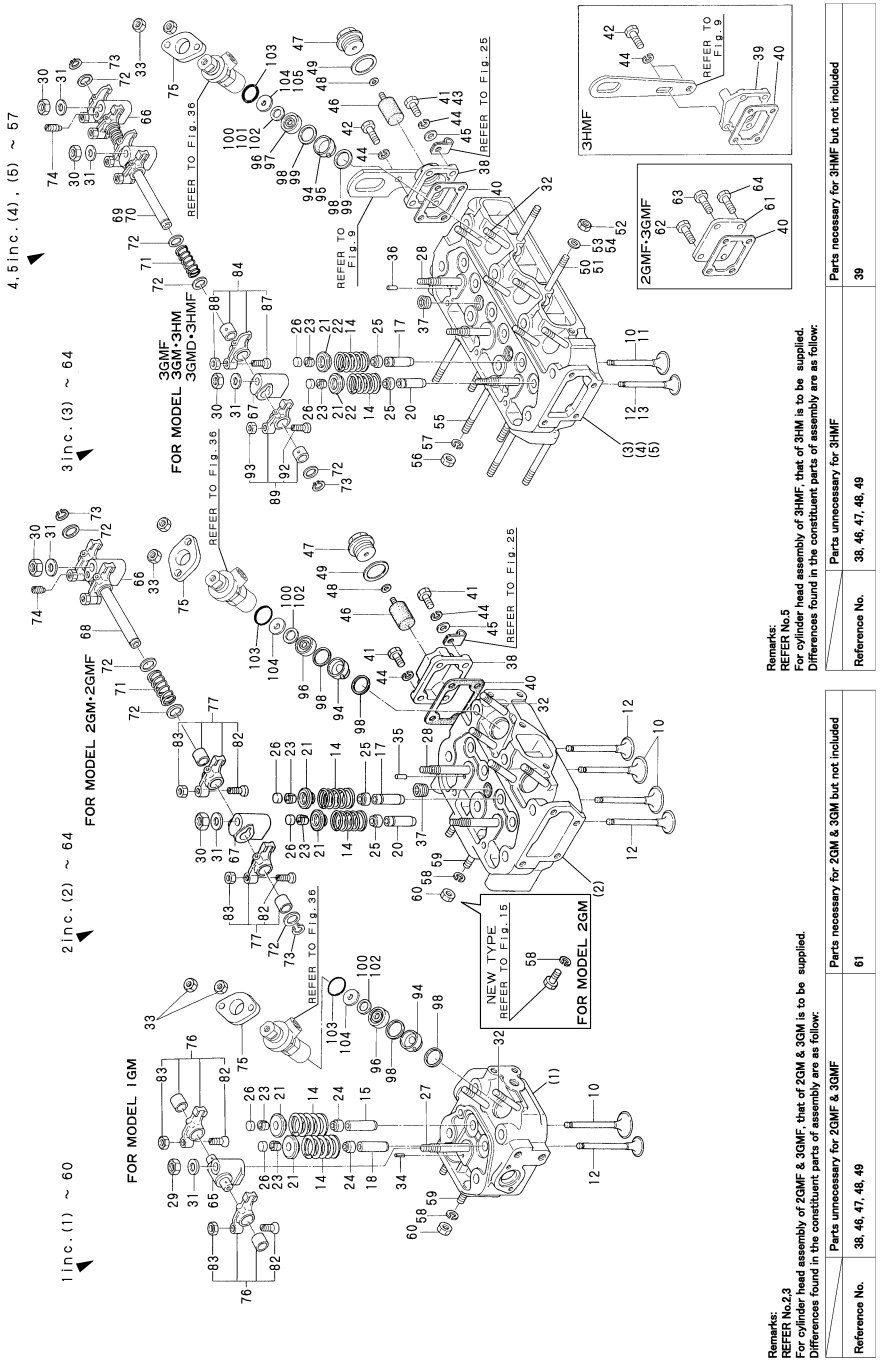

(A)=1GM (B)=2GM(F) (C)=3GM(F) (D)=3GMD (E)=3HM (F)=3HMF

No.	Lev.	Parts No.	Description	Q'ty (A)	(B)	(C)	(D)	(E)	(F)	I	R
98	1	124950-11450	GASKET, CHAMBER	2	4	6	6				
99	1	121550-11451	GASKET, CHAMBER					6	6		
100	1	101147-11490	INSULATOR	1	2	3				Z	
	(A=EXXX)	(B=EXXX)	(C=EXXX)								
101	1	103854-11490	INSULATOR					3		Z	
					(E=EXXX)						
102	1	128275-11490	PROTECTOR	1	2	3	3	3	3	W	
	(A=*1980.11)	(B=*1980.11)	(C=*1980.11) (D=*1980.11)		(E=*1980.11)			(F=*1980.11)			
103	1	24341-000260	O-RING, 1AS26.0	1	2	3	3				
104	1	128275-11500	COVER	1	2	3	3			W	
	(A=*1980.11)	(B=*1980.11)	(C=*1980.11) (D=*1980.11)								
105	1	128695-11500	COVER					3	3	W	
					(E=*1980.11)			(F=*1980.11)			

N:Old $\xleftarrow[\text{No}]{\text{Yes}}$ New, Q:Old $\xleftarrow[\text{Yes}]{\text{No}}$ New, R:Old $\xleftarrow[\text{Yes}]{\text{Yes}}$ New, S:Old $\xleftarrow[\text{No}]{\text{No}}$ New, W:Add, Z:Discontinued, F:Interchangeable by set, K:Q'ty Change

Copyright (C) YANMAR CO., LTD. All RightsReserved.

Fig.12. BONNET

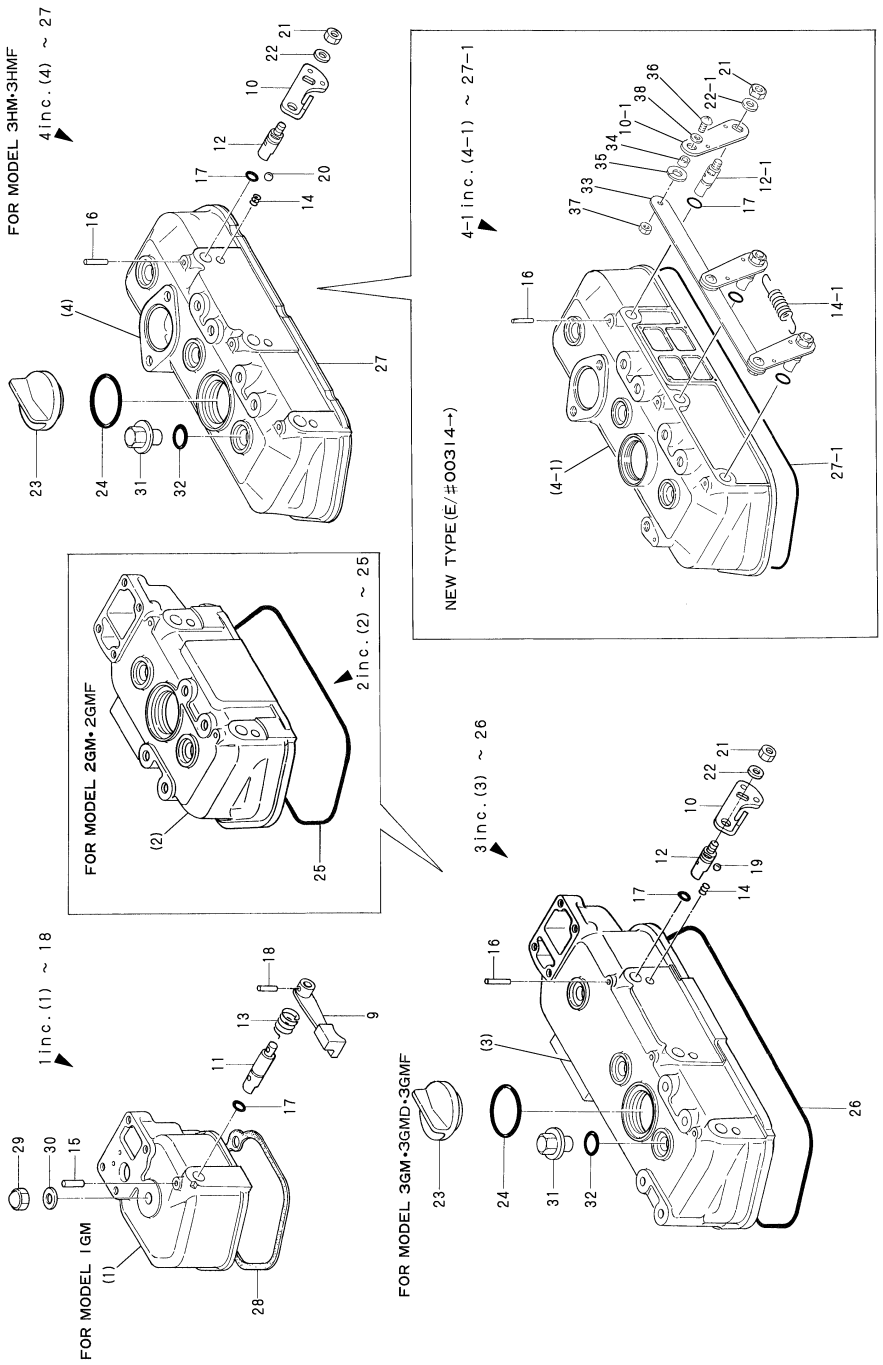

(A)=1GM (B)=2GM(F) (C)=3GM(F) (D)=3GMD (E)=3HM (F)=3HMF

No.	Lev.	Parts No.	Description	Q'ty (A)	(B)	(C)	(D)	(E)	(F)	I	R
38	1	22117-050000	WASHER, 5					3	3	W	
					(E=EXXX)			(F=EXXX)			

N:Old $\xleftarrow[\text{No}]{\text{Yes}}$ New, Q:Old $\xleftarrow[\text{Yes}]{\text{No}}$ New, R:Old $\xleftarrow[\text{Yes}]{\text{Yes}}$ New, S:Old $\xleftarrow[\text{No}]{\text{No}}$ New, W:Add, Z:Discontinued, F:Interchangeable by set, K:Q'ty Change

Copyright (C) YANMAR CO., LTD. All RightsReserved.

Fig.13. AIR INTAKE SILENCER

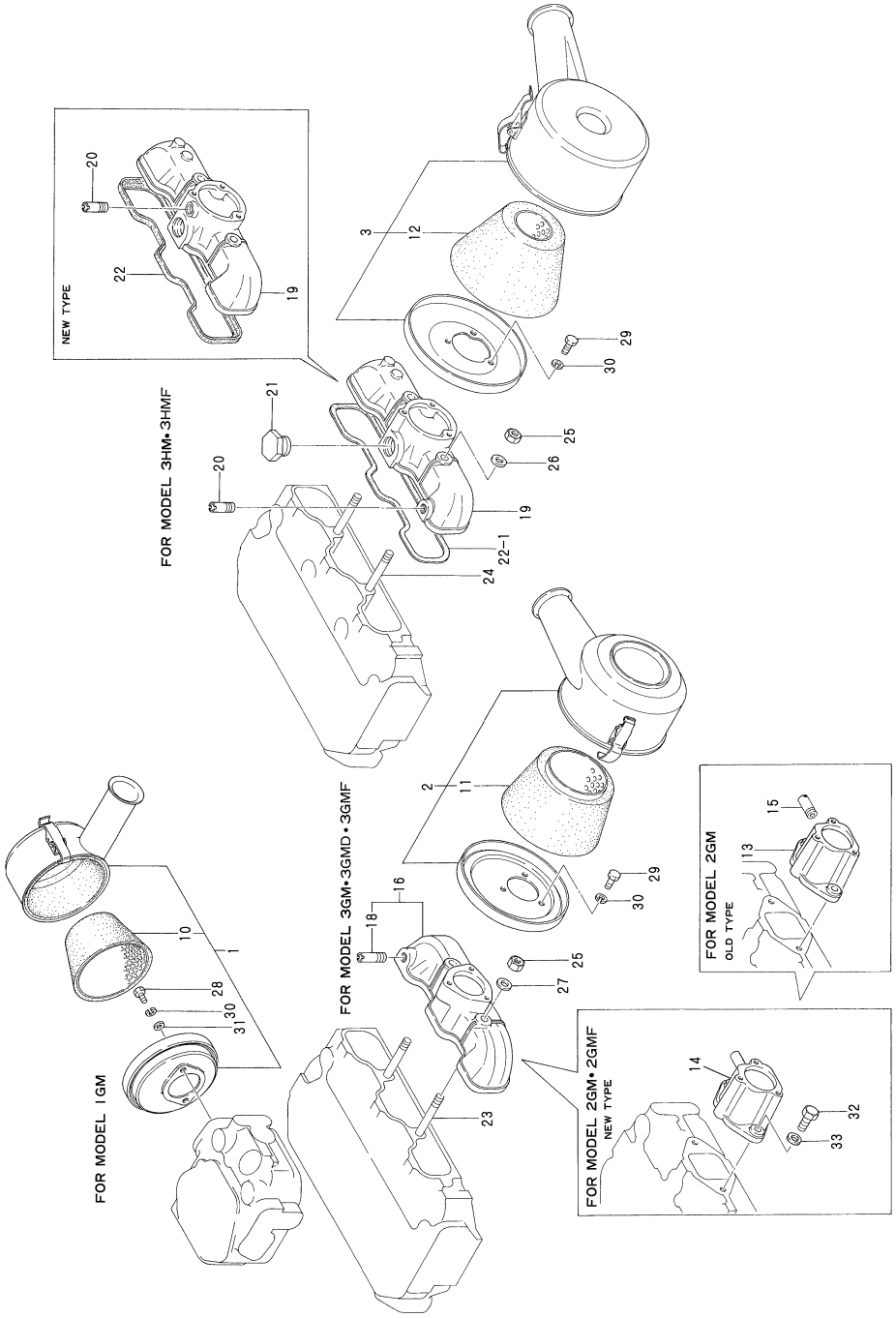

(A)=1GM (B)=2GM(F) (C)=3GM(F) (D)=3GMD (E)=3HM (F)=3HMF

No.	Lev.	Parts No.	Description	Q'ty (A)	(B)	(C)	(D)	(E)	(F)	I	R
1	1	128170-12500	SILENCER ASSY	1							
2	1	128270-12500	SILENCER ASSY		1	1	1				
3	1	124770-12500	SILENCER					1	1		
10	2	128170-12540	ELEMENT	1							
11	2	128270-12540	ELEMENT		1	1	1				
12	2	124770-12540	ELEMENT					1	1		
13	1	128270-12730	PIPE, AIR INTAKE		1					Z	
		(B=*1980.08)									
14	2	128270-12700	PIPE, AIR INTAKE		1						
15	2	124770-11770	JOINT, PIPE PT1/8		1					Z	
		(B=*1980.08)									
16	1	128370-12730	MANIFOLD ASSY,INTAKE			1	1				
18	2	124770-11770	JOINT, PIPE PT1/8			1	1				
19	1	121575-12700	MANIFOLD, AIR INTAKE					1	1		
20	1	124770-11770	JOINT, PIPE PT1/8					1	1		
21	1	124450-11320	PLUG					1	1		
22	1	121550-12710	GASKET, MANIFOLD					1	1		
22-1	1	121551-12710	GASKET, MANIFOLD					1	1	N	
				(E=*1980.09)				(F=*1980.09)			
23	1	26216-080552	STUD, M8X 55			2	2				
24	1	121250-11550	BOLT					2	2		
25	1	26716-080002	NUT, M8			2	2	2	2		
26	1	22137-080000	WASHER, 8					2	2		
27	1	22117-080000	WASHER, 8			2	2				
28	1	26116-060102	BOLT, M6X 10 PLATED	2							
29	1	26116-060142	BOLT, M6X 14 PLATED		3	3	3	3	3		
30	1	22217-060000	WASHER, SPRING 6	2	3	3	3	3	3		
31	1	22117-060000	WASHER, 6	2	3	3	3				
32	1	26116-080202	BOLT, M8X 20 PLATED		2						
33	1	22117-080000	WASHER, 8		2						

N:Old $\overset{\text{Yes}}{\underset{\text{No}}{\leftrightarrows}}$ New, Q:Old $\overset{\text{No}}{\underset{\text{Yes}}{\leftrightarrows}}$ New, R:Old $\overset{\text{Yes}}{\underset{\text{Yes}}{\leftrightarrows}}$ New, S:Old $\overset{\text{No}}{\underset{\text{No}}{\leftrightarrows}}$ New, W:Add, Z:Discontinued, F:Interchangeable by set, K:Q'ty Change

Copyright (C) YANMAR CO., LTD. All RightsReserved.

Fig.14. EXHAUST MANIFOLD

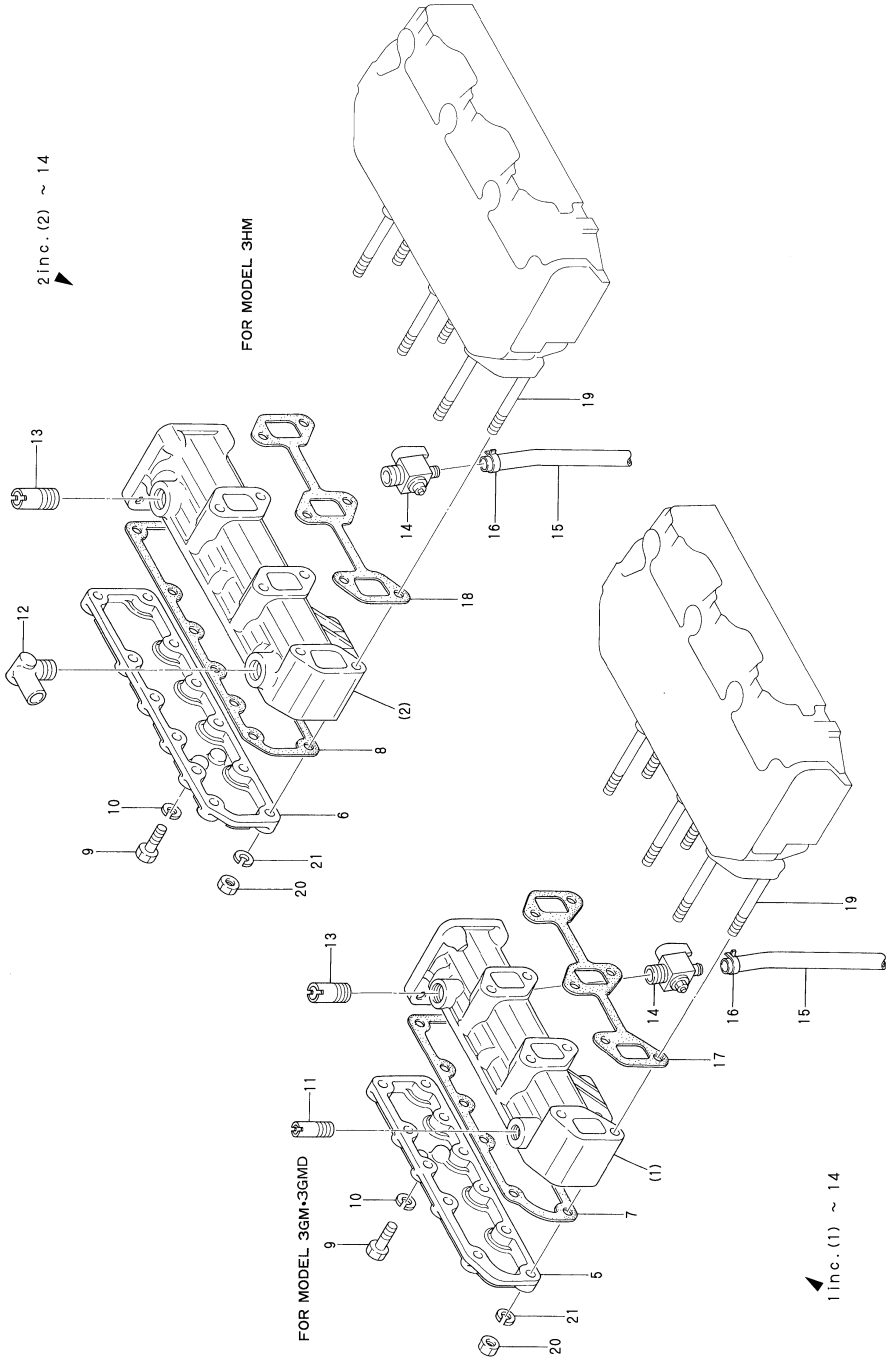

(A)=1GM (B)=2GM(F) (C)=3GM(F) (D)=3GMD (E)=3HM (F)=3HMF

No.	Lev.	Parts No.	Description	Q'ty (A)	(B)	(C)	(D)	(E)	(F)	I	R
1	1	728370-13500	MANIFOLD ASSY			1	1				
2	2	728670-13500	MANIFOLD ASSY					1			
5	2	128370-13160	COVER, MANIFOLD			1	1				
6	2	128670-13160	COVER, MANIFOLD					1			
7	2	128370-13180	GASKET			1	1				
8	2	128670-13180	GASKET					1			
9	2	26116-080252	BOLT, M8X 25 PLATED			5	5	6			
10	2	22217-080000	WASHER, SPRING 8			5	5	6		Z	
			(C=EXXX) (D=EXXX) (E=EXXX)								
11	2	104211-49060	JOINT			1	1				
12	2	124070-13300	ELBOW, PT3/8					1			
13	2	124223-49300	JOINT, PIPE			1	1	1			
14	2	104200-11920	COCK, WATER			1	1	1			
15	1	23061-100500	PIPE, 10X 500			1		1			
15-1	1	23061-100300	PIPE, 10X 300			1	1			R	
			(C=EXXX)								
16	1	124223-49750	CLIP, HOSE 13			1	1	1			
17	1	121450-13250	GASKET			1	1				
18	1	121550-13520	GASKET					1			
19	1	26213-080802	STUD, M8X 80			6	6	6			
20	1	26713-080002	NUT, M8			6	6	6			
21	1	22217-080000	WASHER, SPRING 8			6	6	6			

N:Old $\xleftarrow[\text{No}]{\text{Yes}}$ New, Q:Old $\xleftarrow[\text{Yes}]{\text{No}}$ New, R:Old $\xleftrightarrow[\text{Yes}]{\text{Yes}}$ New, S:Old $\xleftrightarrow[\text{No}]{\text{No}}$ New, W:Add, Z:Discontinued, F:Interchangeable by set, K:Q'ty Change

Copyright (C) YANMAR CO., LTD. All RightsReserved.

Fig.15. MIXING ELBOW

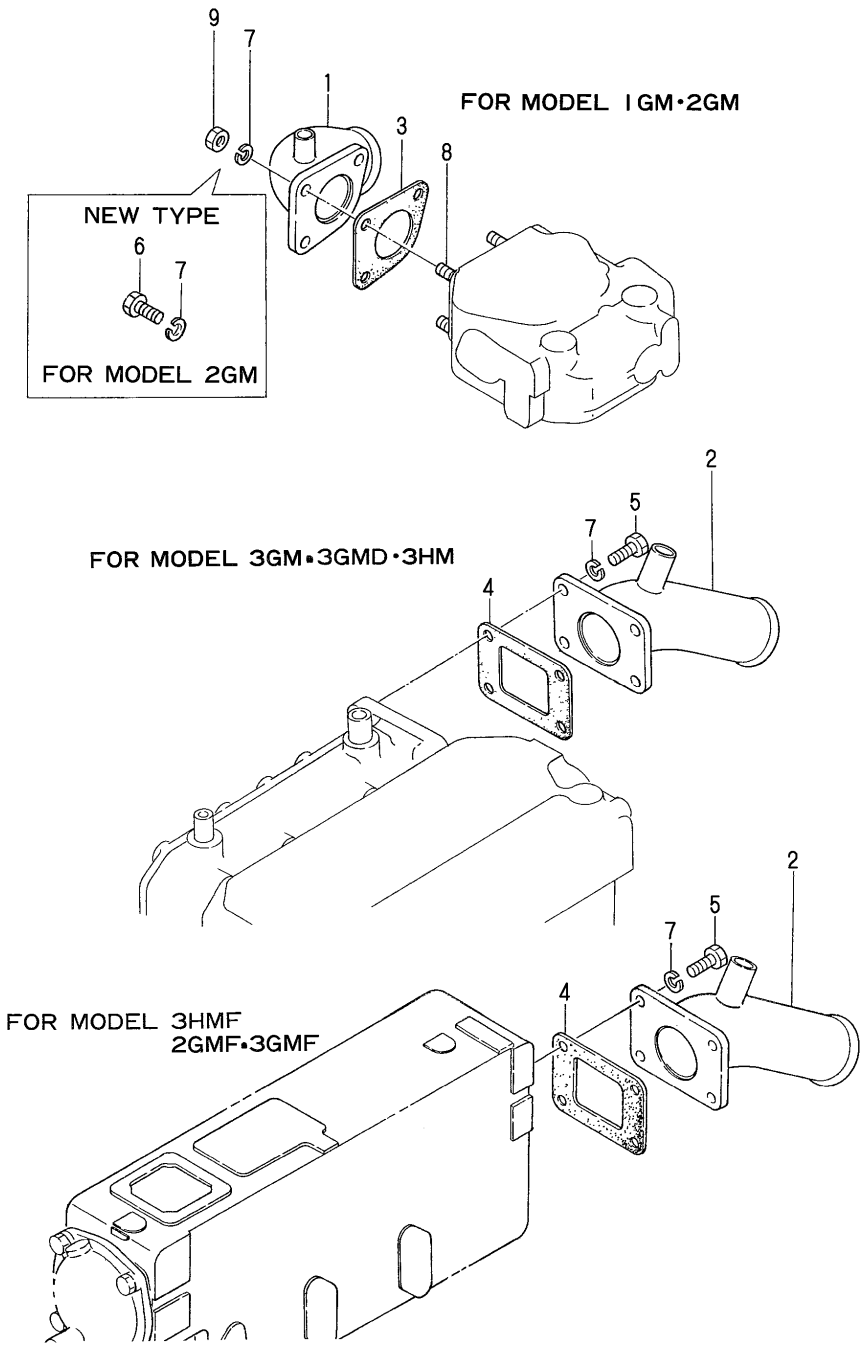

(A)=1GM (B)=2GM(F) (C)=3GM(F) (D)=3GMD (E)=3HM (F)=3HMF

No.	Lev.	Parts No.	Description	Q'ty (A)	(B)	(C)	(D)	(E)	(F)	I	R
1	1	128170-13530	ELBOW	1	1						
2	1	128370-13530	ELBOW		1	1	1	1	1		
3	1	128170-13200	GASKET	1	1						
4	1	128370-13200	GASKET		1	1	1	1	1		
5	1	26113-080202	BOLT M8X 20 (STEN			4	4	4	4		
6	1	26113-080202	BOLT M8X 20 (STEN		3					W	
		(B=EXXX)									
7	1	22217-080000	WASHER, SPRING 8	3	3	4	4	4	4		
8	1	26213-080182	STUD, M8X 18	3	3						
8-1	1	26213-080182	STUD, M8X 18		3					Z	
		(B=EXXX)									
9	1	26713-080002	NUT, M8	3	3						
9-1	1	26713-080002	NUT, M8		3					Z	
		(B=EXXX)									

N:Old ◄Yes/No► New, Q:Old ◄No/Yes► New, R:Old ◄Yes/Yes► New, S:Old ◄No/No► New, W:Add, Z:Discontinued, F:Interchangeable by set, K:Q'ty Change

Copyright (C) YANMAR CO., LTD. All RightsReserved.

Fig.16. MIXING ELBOW(U-TYPE/OPTIONAL)

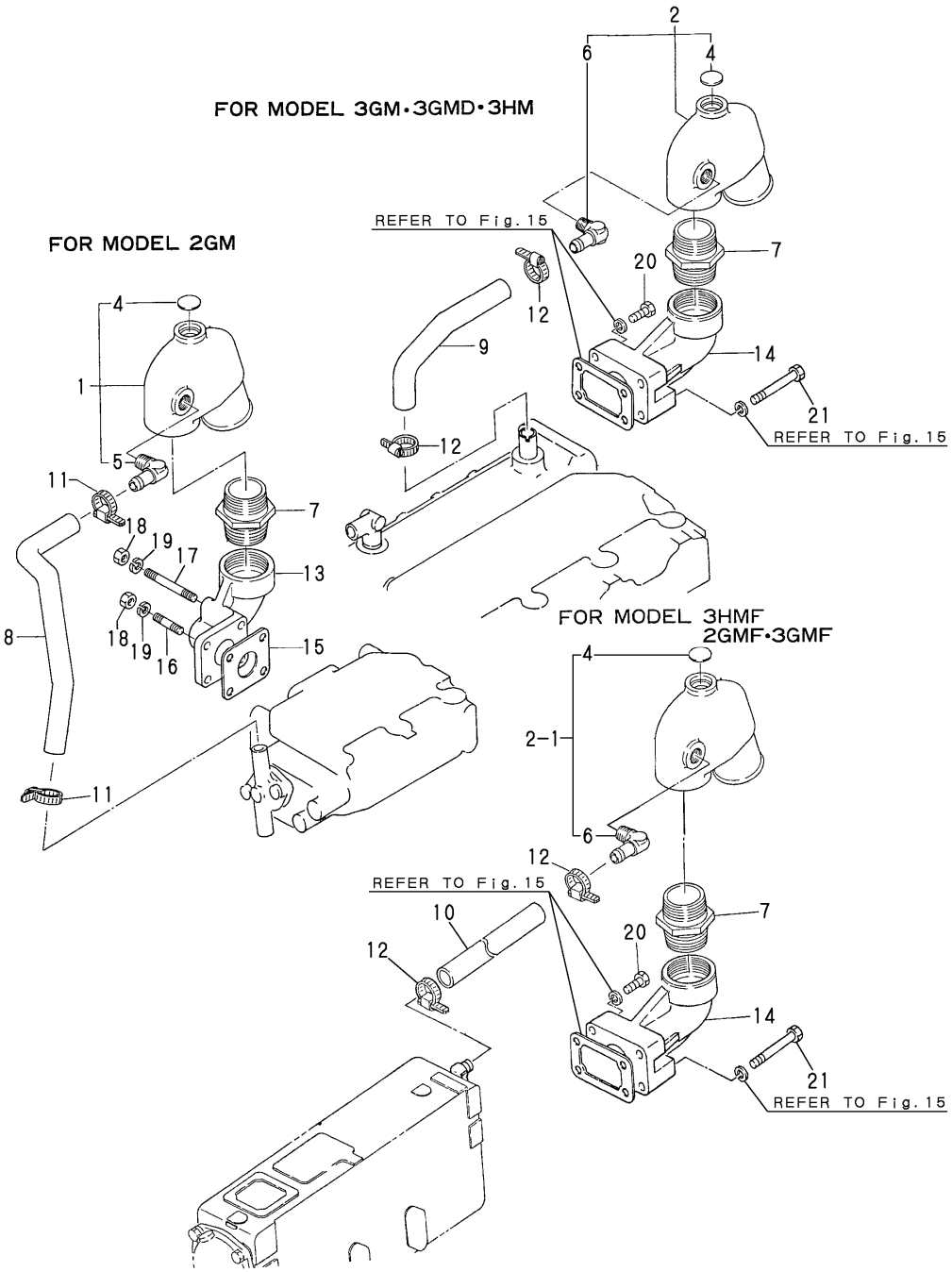

(A)=1GM (B)=2GM(F) (C)=3GM(F) (D)=3GMD (E)=3HM (F)=3HMF

No.	Lev.	Parts No.	Description	Q'ty (A)	(B)	(C)	(D)	(E)	(F)	I	R
1	1	128270-13600	ELBOW ASSY		1						
2	1	124070-13520	ELBOW			1	1	1			
2-1	1	128370-13600	ELBOW		1	1	1	1	1		R
			(C=EXXX) (D=EXXX) (E=EXXX)								
4	2	27233-250000	PLUG, 25		1	1	1	1	1		
5	2	128270-13620	JOINT, PIPE PT3/8		1						
6	2	124070-13300	ELBOW, PT3/8		1	1	1	1	1		
7	1	104214-13580	JOINT		1	1	1	1	1		
8	1	128270-49250	PIPE, WATER		1						
9	1	128370-49250	PIPE, WATER			1	1	1			
10	1	128690-49250	PIPE, WATER		1				1		
11	1	23000-022000	CLAMP, 22		2						
12	1	23000-025000	CLAMP, 25		2	2	2	2	2		
13	1	128270-13610	ELBOW		1						
14	1	128370-13610	ELBOW		1	1	1	1	1		
15	1	124000-13200	GASKET, SILENCER		1						
16	1	26213-080222	STUD, M8X 22		2						
17	1	26213-080702	STUD, M8X 70		2						
18	1	26713-080002	NUT, M8		4						
19	1	22217-080000	WASHER, SPRING 8		4						
20	1	26113-080402	BOLT M 8X 40		2	2	2	2	2		
21	1	26113-080602	BOLT M 8X 60			2	2	2	2		

N:Old ◄Yes/No► New, Q:Old ◄No/Yes► New, R:Old ◄Yes/Yes► New, S:Old ◄No/No► New, W:Add, Z:Discontinued, F:Interchangeable by set, K:Q'ty Change

Copyright (C) YANMAR CO., LTD. All RightsReserved.

Fig.17. CAMSHAFT

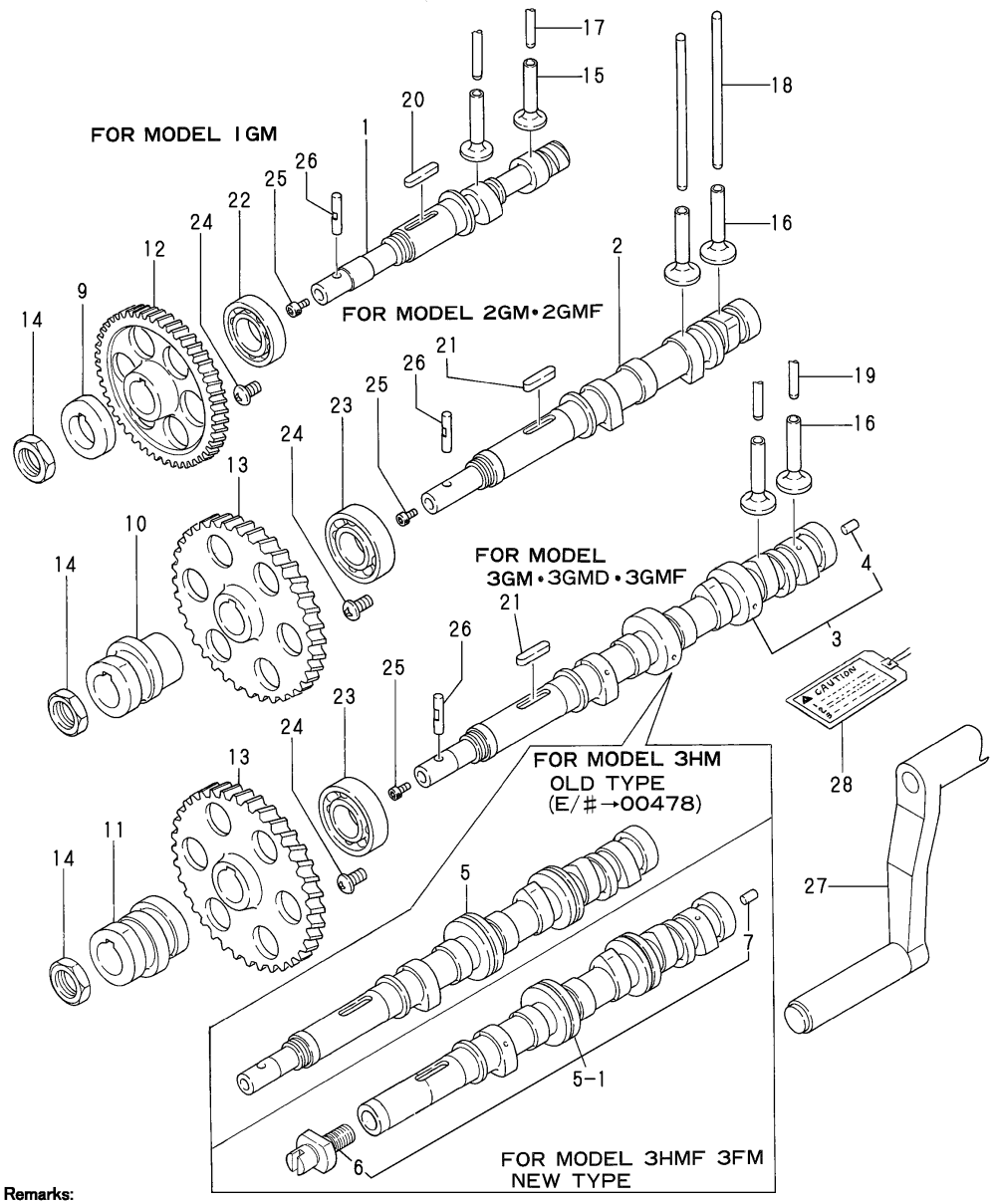

Remarks:
No.5-1: Changed from July, 1980.
(1) Changed effective engine serial number: From E/#00479～(3HM)
Interchangeable provided COVER (Fig.3 No.28-3 171016-01550), BOLT (Fig.3 No.29-1 26116-060162), PACKING (Fig.3 No.40 128695-01840), WASHER 6 (Fig.3 No.41 22137-060000), BOLT (No.6 121000-14110) and PLUG (No.7 121000-14550) are replaced to the original type.
(2) The parts shown in (1) above are included in the camshaft assembly.

(A)=1GM (B)=2GM(F) (C)=3GM(F) (D)=3GMD (E)=3HM (F)=3HMF

No.	Lev.	Parts No.	Description	Q'ty (A)	(B)	(C)	(D)	(E)	(F)	I	R
1	1	128170-14010	CAMSHAFT	1							
2	1	128270-14010	CAMSHAFT		1						
3	1	128370-14010	CAMSHAFT			1	1				
4	2	121000-14550	PLUG			1	1				
5	1	128670-14010	CAMSHAFT					1			
5-1	1	728670-14581	CAMSHAFT ASSY					1	1	F	
				(E=E/#00479)							
6	2	121000-14110	BOLT, CAMSHAFT					1	1	W	
				(E=E/#00479)							
7	2	121000-14550	PLUG					1	1	W	
				(E=E/#00479)							
9	1	124060-14090	CAM, FUEL	1							
10	1	124000-14090	CAM, FUEL		1						
11	1	121575-14090	CAM, FUEL			1	1	1	1		
12	1	128170-14100	GEAR, CAMSHAFT	1							
13	1	129350-14100	GEAR, CAMSHAFT		1	1	1	1	1		
14	1	128170-14150	NUT	1	1	1	1	1	1		
14-1	1	128170-14150	NUT					1	1	Z	
				(E=E/#00479)				(F=EXXX)			
15	1	105430-14200	TAPPET	2							
16	1	104200-14200	TAPPET		4	6	6	6	6		
17	1	105225-14400	ROD, PUSH	2							
18	1	121450-14400	ROD, PUSH		4	6	6				
19	1	121550-14400	ROD, PUSH					6	6		
20	1	22512-050340	KEY, 5X 34	1							
21	1	22512-070300	KEY, 7X 30		1	1	1	1	1		
22	1	24101-060054	BEARING, BALL 6005	1							
23	1	24101-062054	BEARING, BALL 6205		1	1	1	1	1		
24	1	26587-080122	SCREW, M8X12	1	1	1	1	1	1		
24-1	1	26587-080102	SCREW, M8X10					1	1	S	
				(E=EXXX)				(F=EXXX)			
25	1	26450-050102	BOLT, M5X 10	1	1	1	1	1	1		
25-1	1	26450-050102	BOLT, M5X 10					1	1	Z	
				(E=EXXX)				(F=EXXX)			
26	1	124070-14760	PIN	1	1	1	1	1	1		
26-1	1	124070-14760	PIN					1	1	Z	
				(E=EXXX)				(F=EXXX)			
27	1	128170-76790	HANDLE, STARTING	1	1	1	1	1	1		
27-1	1	128170-76790	HANDLE, STARTING					1	1	Z	
				(E=E/#00018)				(F=EXXX)			
28	1	128170-07850	LABEL, CAUTION	1	1	1	1			W	
	(A=EXXX)	(B=E/#00019)	(C=E/#00012) (D=EXXX)								

N:Old ⇄(Yes/No) New, Q:Old ⇄(No/Yes) New, R:Old ⇄(Yes/Yes) New, S:Old ⇄(No/No) New, W:Add, Z:Discontinued, F:Interchangeable by set, K:Q'ty Change

Copyright (C) YANMAR CO., LTD. All RightsReserved.

Fig.18. CRANKSHAFT & FLYWHEEL

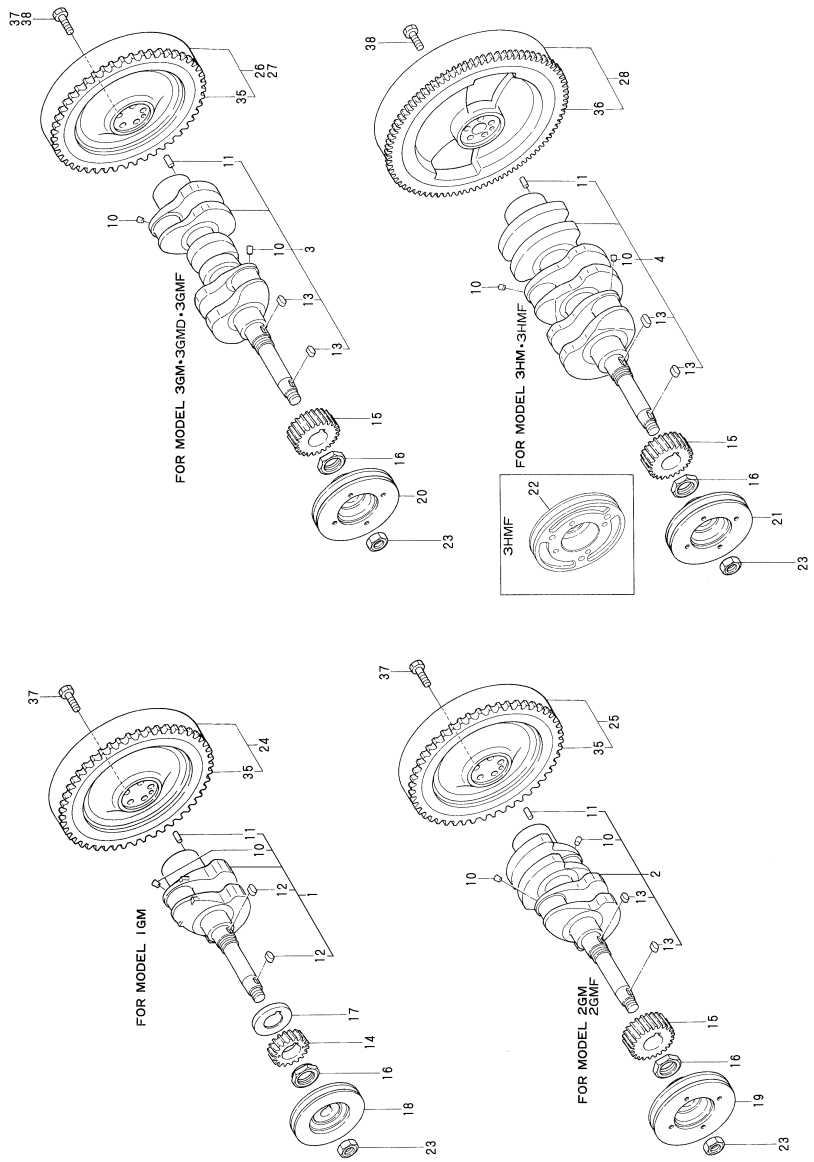

Remarks
(1)INTERCHANGEABLE BY SIMULTANEOUS REPLACEMENT WITH REF.NO.2-1, 19-1,25-1.
2GMF *1982.01
(2)3GMF

(A)=1GM (B)=2GM(F) (C)=3GM(F) (D)=3GMD (E)=3HM (F)=3HMF

No.	Lev.	Parts No.	Description	Q'ty (A)	(B)	(C)	(D)	(E)	(F)	I	R
1	1	728170-21700	CRANKSHAFT ASSY	1							
2	1	724000-21700	CRANKSHAFT ASSY		1						
2-1	1	724000-21701	CRANKSHAFT ASSY		1					F	1
		(B=E/#04758)									
3	1	721000-21700	CRANKSHAFT ASSY			1	1				
3A	1	721000-21700	CRANKSHAFT ASSY			1					2
3A-1	1	721000-21701	CRANKSHAFT ASSY			1				N	2
			(C=EXXX)								
4	1	721500-21700	CRANKSHAFT ASSY					1	1		
10	2	27221-060100	PLUG, 6X10	1	2	3	3	3	3		
10-1	2	27221-060140	PLUG 6X14	1	2	3	3	3	3	R	
	(A=EXXX)	(B=*EXXX)	(C=EXXX) (D=EXXX)	(E=EXXX)				(F=EXXX)			
10-2	2	24190-080001	BALL, STEEL 1/4	1	2	3	3	3	3	R	
	(A=*1982.05)	(B=*1982.05)	(C=*1982.05) (D=*1982.05)	(E=*1982.05)				(F=*1982.05)			
11	2	22312-080160	PIN, PARALLEL M8X16	1	1	1	1	1	1		
12	2	22512-070120	KEY, 7X 12	2							
13	2	22512-070180	KEY, 7X 18		2	2	2	2	2		
14	1	128170-21200	GEAR, CRANKSHAFT	1							
15	1	129350-21200	GEAR, CRANKSHAFT		1	1	1	1	1		
16	1	121450-21540	NUT, CRANKSHAFT GEAR	1	1	1	1	1	1		
17	1	128170-21250	WASHER, THRUST	1							
18	1	128170-21650	V-PULLEY	1							
19	1	128270-21650	V-PULLEY		1						
19-1	1	128270-21651	V-PULLEY		1					S	1
		(B=E/#04758)									
20	1	128370-21650	V-PULLEY			1	1				
21	1	128670-21650	V-PULLEY					1			
22	1	128695-21650	V-PULLEY						1		
23	1	26776-180002	NUT, LOCK M18	1	1	1	1	1	1		
24	1	128170-21590	FLYWHEEL ASSY	1							
25	1	128270-21590	FLYWHEEL ASSY		1						
25-1	1	128270-21591	FLYWHEEL ASSY		1					S	1
		(B=E/#04758)									
26	1	128370-21590	FLYWHEEL ASSY			1					
26A	1	128371-21590	FLYWHEEL ASSY			1					2
27	1	128371-21590	FLYWHEEL ASSY				1				
28	1	128670-21590	FLYWHEEL ASSY					1	1		
35	2	124950-21600	GEAR, RING	1	1	1	1				
36	2	104211-21600	GEAR, RING					1	1		
37	1	121000-21500	BOLT, FLYWHEEL	5	5	5					
38	1	121574-21500	BOLT, FLYWHEEL 10 45				5	5	5		

N:Old ←Yes/No→ New, Q:Old ←No/Yes→ New, R:Old ←Yes/Yes→ New, S:Old ←No/No→ New, W:Add, Z:Discontinued, F:Interchangeable by set, K:Q'ty Change

Copyright (C) YANMAR CO., LTD. All RightsReserved.

Fig.19. PISTON

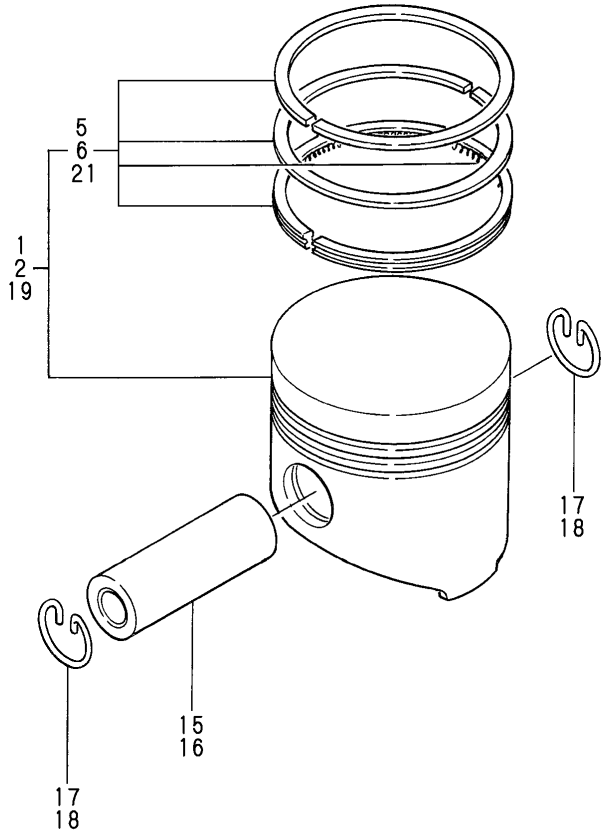

(A)=1GM (B)=2GM(F) (C)=3GM(F) (D)=3GMD (E)=3HM (F)=3HMF

No.	Lev.	Parts No.	Description	Q'ty (A)	(B)	(C)	(D)	(E)	(F)	I	R
1	1	121000-22090	PISTON ASSY	1	2	3	3				
2	1	121575-22090	PISTON ASSY					3	3		
5	2	721000-22500	RING SET, PISTON	1	2	3	3				
6	2	721575-22500	RING SET, PISTON					3	3		
15	1	105225-22300	PIN, PISTON	1	2	3	3				
16	1	104200-22300	PIN, PISTON					3	3		
17	1	105225-22400	CIRCLIP	2	4	6	6				
18	1	172100-22400	CIRCLIP					6	6		
19	1	128170-22470	PISTON ASSY, 0.25 OS	1							
21	2	728170-22540	RING SET, 0.25 OS	1							

ATTENTION

As the abovementioned oversize parts are used for Model 1GM exclusively, they are not used for other Models.

N:Old $\overset{\text{Yes}}{\underset{\text{No}}{\leftrightarrows}}$ New, Q:Old $\overset{\text{No}}{\underset{\text{Yes}}{\leftrightarrows}}$ New, R:Old $\overset{\text{Yes}}{\underset{\text{Yes}}{\leftrightarrows}}$ New, S:Old $\overset{\text{No}}{\underset{\text{No}}{\leftrightarrows}}$ New, W:Add, Z:Discontinued, F:Interchangeable by set, K:Q'ty Change

Copyright (C) YANMAR CO., LTD. All RightsReserved.

Fig.20. CONNECTING ROD

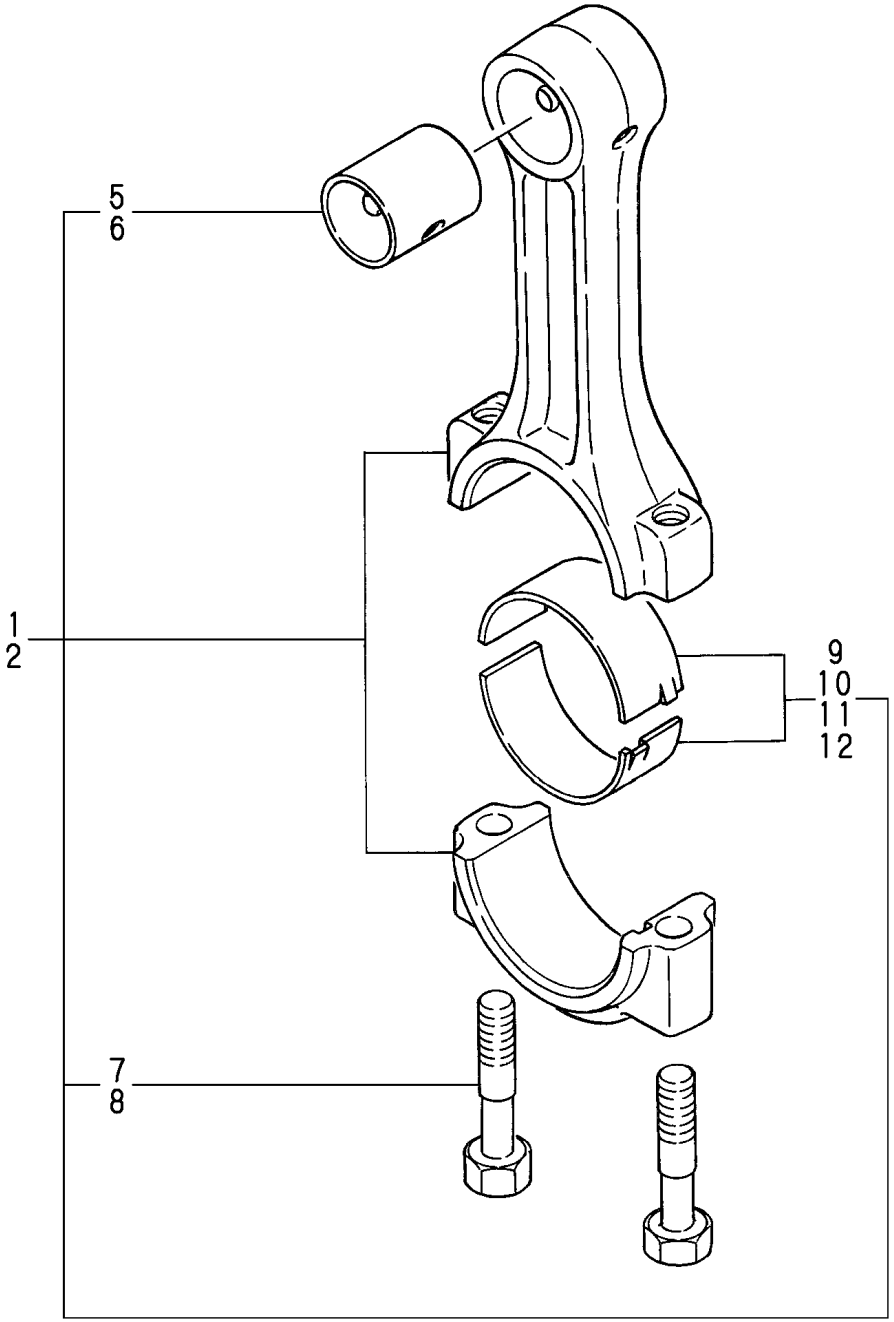

(A)=1GM (B)=2GM(F) (C)=3GM(F) (D)=3GMD (E)=3HM (F)=3HMF

No.	Lev.	Parts No.	Description	Q'ty (A)	(B)	(C)	(D)	(E)	(F)	I	R
1	1	705311-23100	ROD ASSY, CONNECTING	1	2	3	3				
2	1	721550-23100	ROD ASSY, CONNECTING					3	3		
5	2	105225-23100	BEARING, PISTON PIN	1	2	3	3				
6	2	124060-23100	BEARING, PISTON PIN					3	3		
7	2	105225-23200	BOLT, CONNECTING ROD	2	4	6	6				
8	2	121550-23200	BOLT, CONNECTING ROD					6	6		
9	2	705311-23600	BEARING, CRANK PIN	1	2	3	3				
10	2	721550-23600	BEARING, CRANK PIN					3	3		
11	1	105311-23380	METAL ASSY, 0.25	1	2	3	3				
12	1	121550-23380	BEARING, 0.25 US					3	3		

N:Old $\xleftrightarrow[\text{No}]{\text{Yes}}$ New, Q:Old $\xleftrightarrow[\text{Yes}]{\text{No}}$ New, R:Old $\xleftrightarrow[\text{Yes}]{\text{Yes}}$ New, S:Old $\xleftrightarrow[\text{No}]{\text{No}}$ New, W:Add, Z:Discontinued, F:Interchangeable by set, K:Q'ty Change

Copyright (C) YANMAR CO., LTD. All RightsReserved.

Fig.21. LUB. OIL PUMP

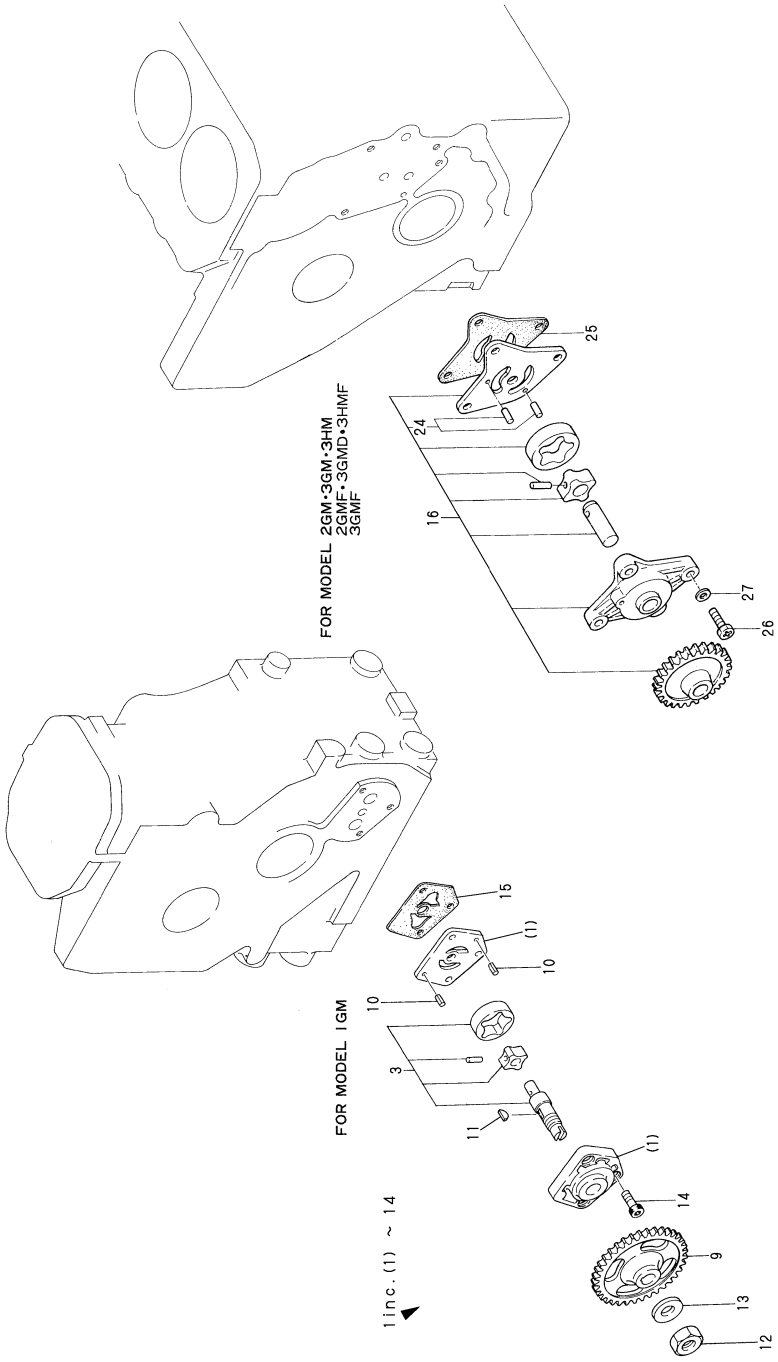

(A)=1GM (B)=2GM(F) (C)=3GM(F) (D)=3GMD (E)=3HM (F)=3HMF

No.	Lev.	Parts No.	Description	Q'ty (A)	(B)	(C)	(D)	(E)	(F)	I	R
1	1	728170-32100	PUMP ASSY, OIL	1							
3	2	728170-32500	ROTOR ASSY	1							
9	2	128170-32200	GEAR, OIL PUMP	1							
10	2	22351-040008	PIN, SPRING 4.0X 8	2							
11	2	22522-030100	KEY, WOODRUFF 3X10	1							
12	2	26776-120002	NUT, LOCK M12	1							
13	2	22117-120000	WASHER, 12	1							
14	2	26450-060182	BOLT, M6X 18	3							
15	1	128170-32030	GASKET	1							
16	1	121450-32091	PUMP ASSY, OIL		1	1					
16-1	1	121575-32090	PUMP ASSY, OIL		1	1	1	1	1	R	
		(B=EXXX)	(C=EXXX)								
24	2	121450-32050	PIN		2	2	2	2	2		
25	1	121450-32021	GASKET, PUMP		1	1	1	1	1		
26	1	26116-060222	BOLT, M6X 22 PLATED		3	3	3	3	3		
27	1	22137-060000	WASHER, 6		3	3	3	3	3		

N:Old ◄Yes/No► New, Q:Old ◄No/Yes► New, R:Old ◄Yes/Yes► New, S:Old ◄No/No► New, W:Add, Z:Discontinued, F:Interchangeable by set, K:Q'ty Change

Copyright (C) YANMAR CO., LTD. All RightsReserved.

Fig.22. LUB. OIL DIPSTICK

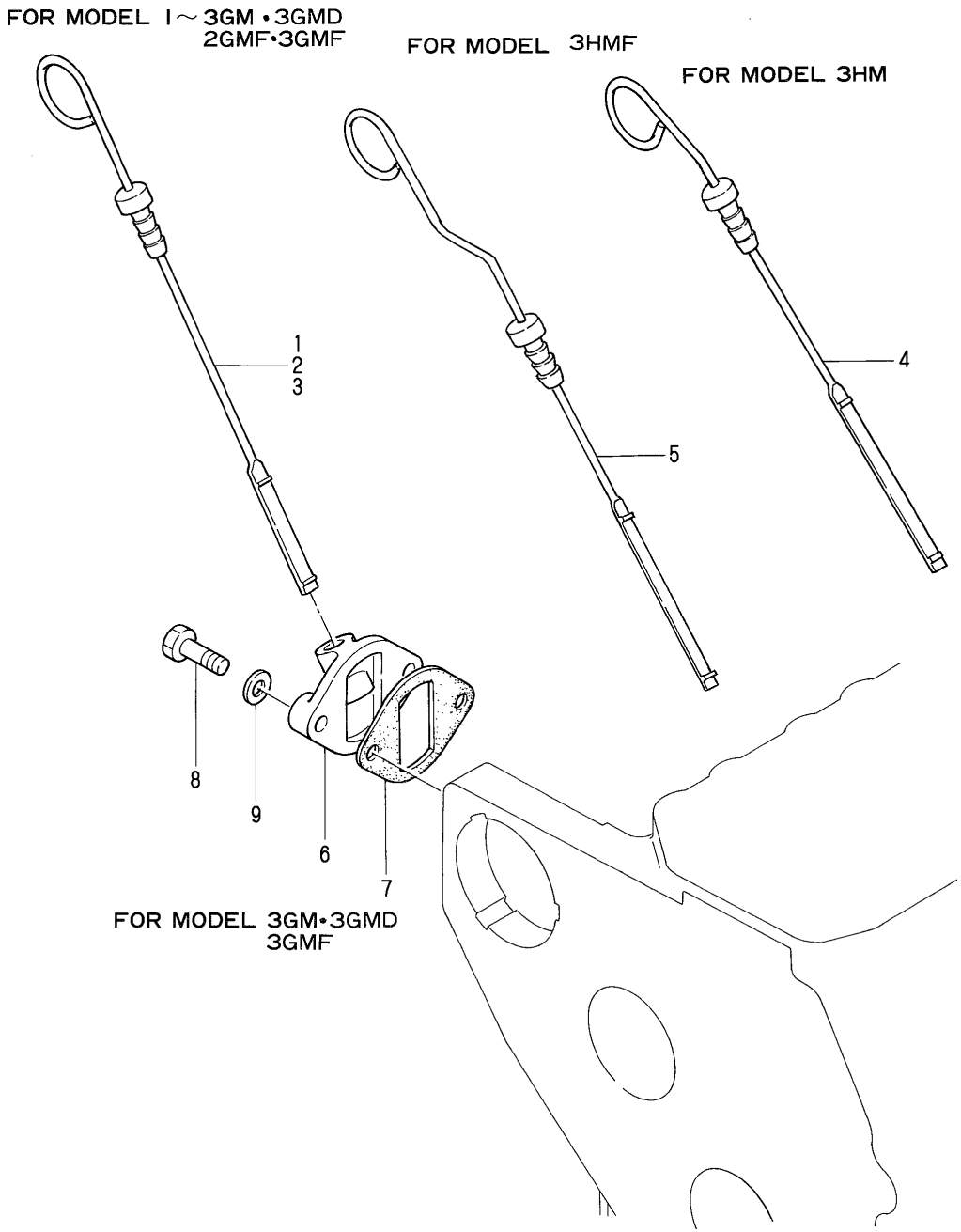

(A)=1GM (B)=2GM(F) (C)=3GM(F) (D)=3GMD (E)=3HM (F)=3HMF

No.	Lev.	Parts No.	Description	Q'ty (A)	(B)	(C)	(D)	(E)	(F)	I	R
1	1	128170-34800	DIPSTICK, OIL	1							
2	1	128270-34800	DIPSTICK, OIL		1						
3	1	128370-34800	DIPSTICK, OIL			1	1				
4	1	121575-34801	DIPSTICK, OIL					1			
5	1	128695-34800	DIPSTICK, OIL						1		
6	1	121575-34830	BRACKET		1	1					
7	1	124160-34844	GASKET		1	1					
8	1	26116-080252	BOLT, M8X 25 PLATED		1						
9	1	22117-080000	WASHER, 8		2						

N:Old ◄Yes/No► New, Q:Old ◄No/Yes► New, R:Old ◄Yes/Yes► New, S:Old ◄No/No► New, W:Add, Z:Discontinued, F:Interchangeable by set, K:Q'ty Change

Copyright (C) YANMAR CO., LTD. All RightsReserved.

Fig.23. LUB. OIL STRAINER

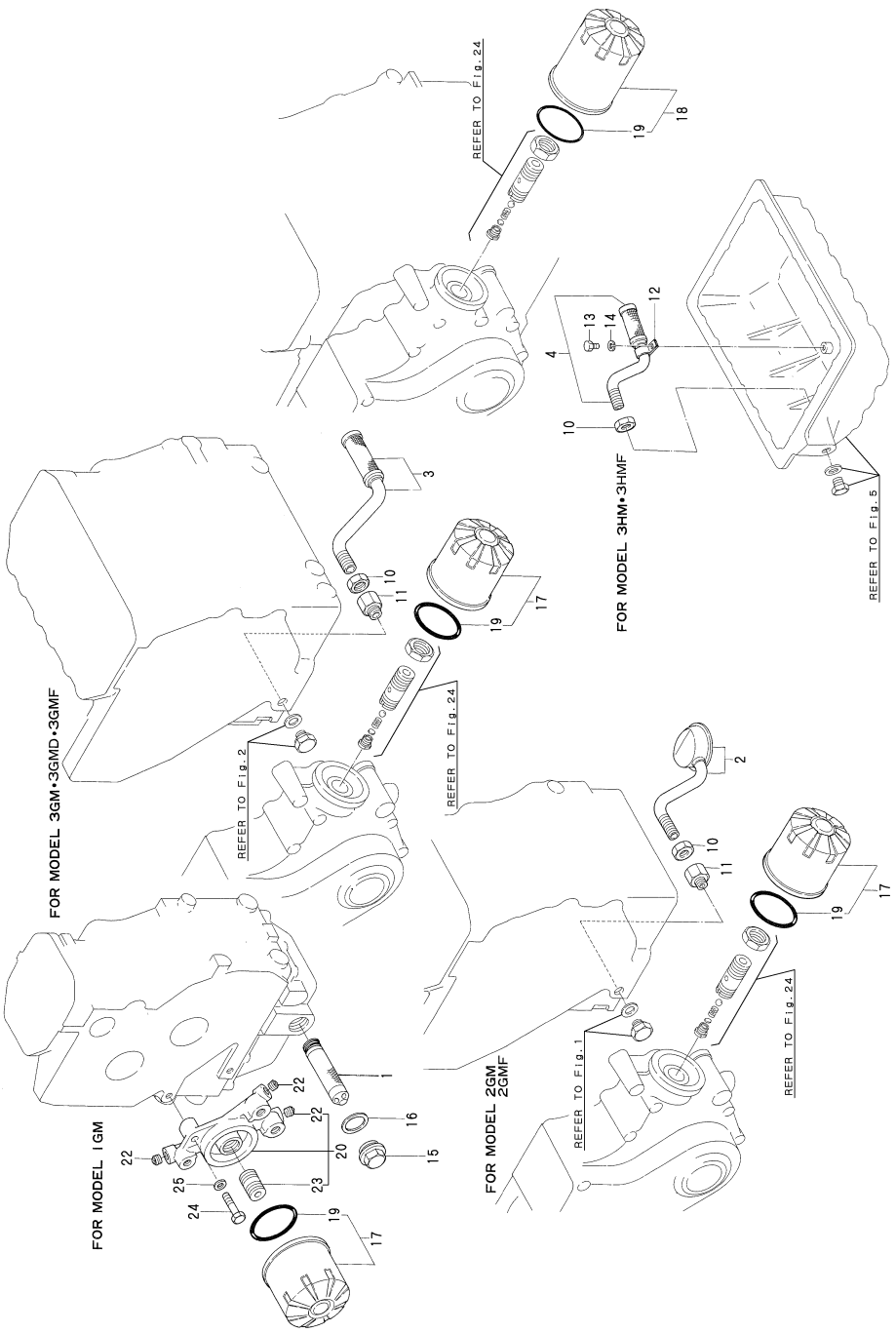

(A)=1GM (B)=2GM(F) (C)=3GM(F) (D)=3GMD (E)=3HM (F)=3HMF

No.	Lev.	Parts No.	Description	Q'ty (A)	(B)	(C)	(D)	(E)	(F)	I	R
1	1	105430-35010	SCREEN	1							
2	1	128270-35090	PIPE ASSY, OIL INLET		1						
3	1	121450-35090	PIPE ASSY, OIL INLET			1	1				
4	1	121575-35090	PIPE ASSY, OIL INLET					1	1		
10	1	124450-35070	NUT, PF1/4		1	1	1	1	1		
11	1	121150-35100	BRACKET		1	1	1				
12	1	121370-35080	RETAINER, PIPE					1	1		
13	1	26116-060142	BOLT, M6X 14 PLATED					1	1		
14	1	22217-060000	WASHER, SPRING 6					1	1		
15	1	105430-01690	PLUG	1							
16	1	43400-500570	SEAL WASHER 24S	1							
17	1	124450-35100	FILTER, OIL	1	1	1	1				
18	1	124550-35110	ELEMENT					1	1		
19	2	124450-35110	O-RING	1	1	1	1	1	1		
20	1	728170-35800	BRACKET ASSY	1							
22	2	124060-01050	PLUG, PT1/8	3							
23	2	105225-35290	BOLT	1							
24	1	26116-080352	BOLT, M8X 35 PLATED	2							
25	1	22137-080000	WASHER, 8	2							

N:Old $\xleftrightarrow[\text{No}]{\text{Yes}}$ New, Q:Old $\xleftrightarrow[\text{Yes}]{\text{No}}$ New, R:Old $\xleftrightarrow[\text{Yes}]{\text{Yes}}$ New, S:Old $\xleftrightarrow[\text{No}]{\text{No}}$ New, W:Add, Z:Discontinued, F:Interchangeable by set, K:Q'ty Change

Copyright (C) YANMAR CO., LTD. All RightsReserved.

Fig.24. LUB. OIL PRESSURE CONTROL VALVE

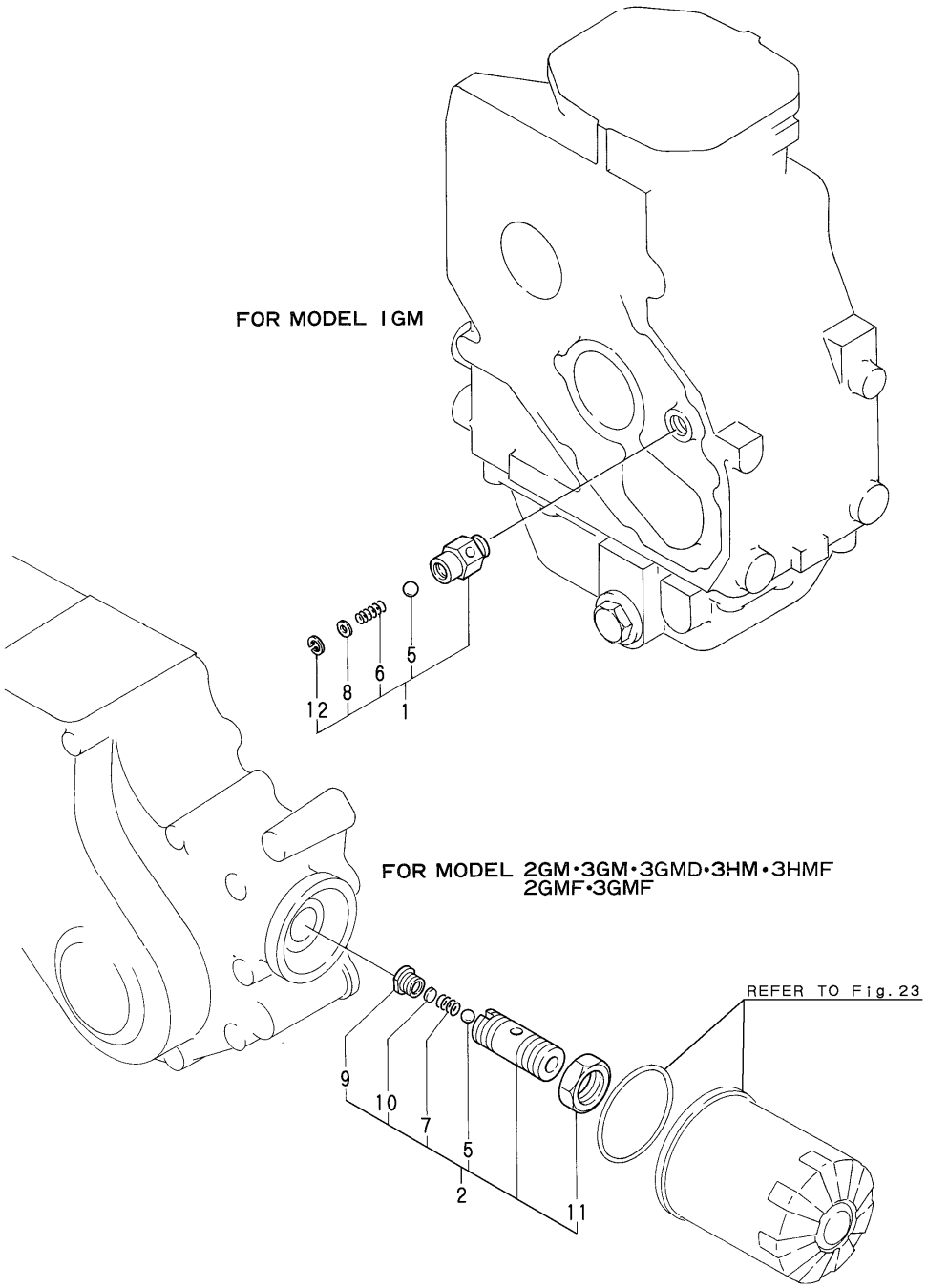

(A)=1GM (B)=2GM(F) (C)=3GM(F) (D)=3GMD (E)=3HM (F)=3HMF

No.	Lev.	Parts No.	Description	Q'ty (A)	(B)	(C)	(D)	(E)	(F)	I	R
1	1	105225-35300	VALVE ASSY, CONTROL	1							
2	1	124085-35300	VALVE ASSY, CONTROL		1	1	1	1	1		
5	2	24190-100001	BALL, STEEL 5/16	1	1	1	1	1	1		
6	2	105582-34040	SPRING	1							
7	2	121250-35320	SPRING, VALVE		1	1	1	1	1		
8	2	124450-35330	RETAINER	1							
9	2	121250-35330	RETAINER, SPRING		1	1	1	1	1		
10	2	121250-35340	SHIM		1	1	1	1	1		
11	2	124450-35350	NUT, LOCK		1	1	1	1	1		
12	2	22252-000100	RING, 10	1							

N:Old $\overset{\text{Yes}}{\underset{\text{No}}{\leftrightarrow}}$ New, Q:Old $\overset{\text{No}}{\underset{\text{Yes}}{\leftrightarrow}}$ New, R:Old $\overset{\text{Yes}}{\underset{\text{Yes}}{\leftrightarrow}}$ New, S:Old $\overset{\text{No}}{\underset{\text{No}}{\leftrightarrow}}$ New, W:Add, Z:Discontinued, F:Interchangeable by set, K:Q'ty Change

Copyright (C) YANMAR CO., LTD. All RightsReserved.

Fig.25. LUB. OIL PIPE

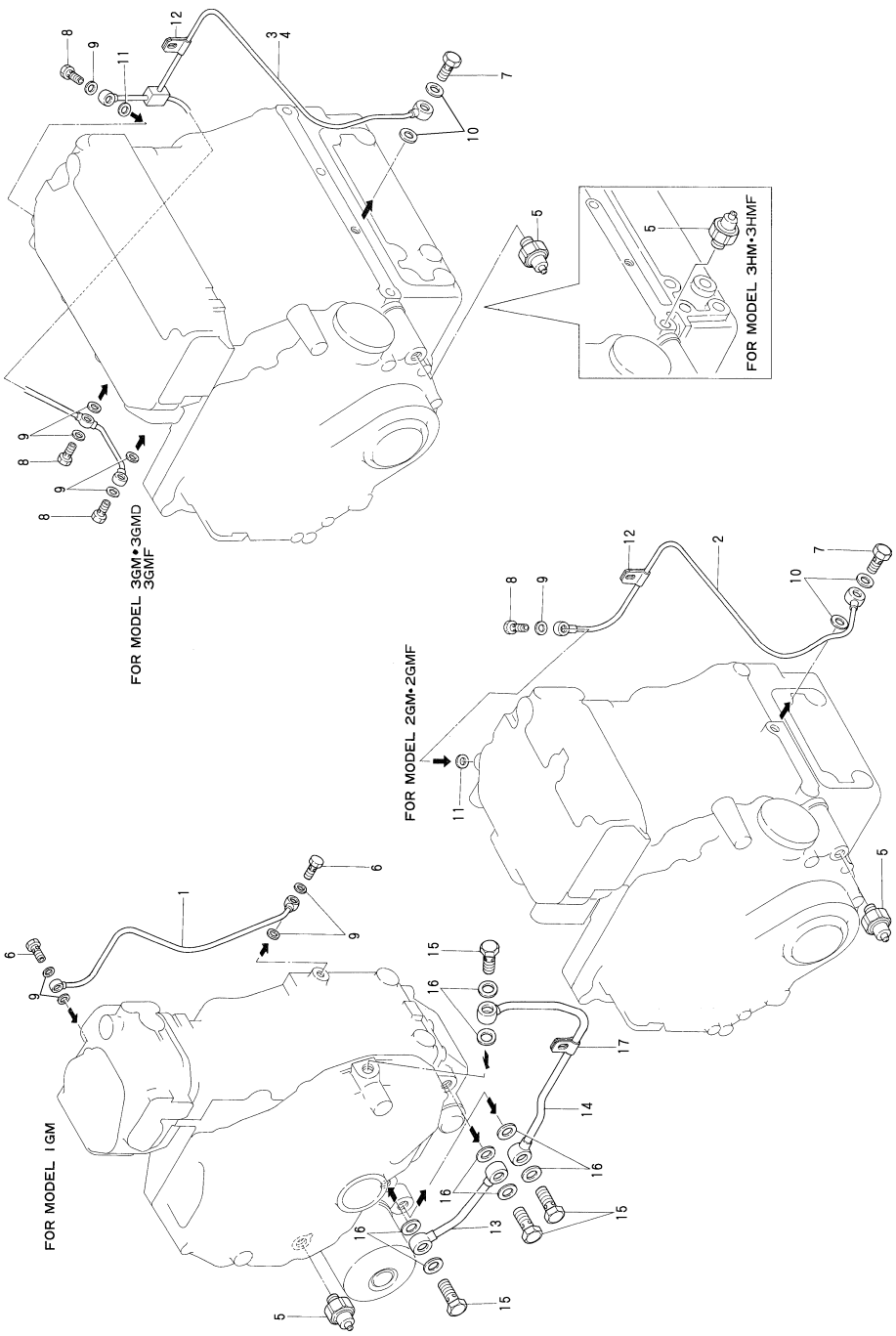

(A)=1GM (B)=2GM(F) (C)=3GM(F) (D)=3GMD (E)=3HM (F)=3HMF

No.	Lev.	Parts No.	Description	Q'ty (A)	(B)	(C)	(D)	(E)	(F)	I	R
1	1	128170-39200	PIPE, OIL	1							
2	1	128270-39200	PIPE, OIL		1						
3	1	128370-39200	PIPE, OIL			1	1				
4	1	121575-39200	PIPE ASSY, OIL					1	1		
5	1	124060-39451	SWITCH, 0.2KG	1	1	1	1	1	1		
6	1	101147-59810	BOLT, PIPE JOINT M8	2							
7	1	124160-39140	BOLT, PIPE JOINT M10		1	1	1	1	1		
8	1	124550-59820	BOLT, PIPE JOINT M8		1	3	3	3	3		
9	1	23414-080000	GASKET, 8X1.0	4	1	5		5			
10	1	23414-100000	GASKET, 10X1.0		2	2	2	2	2		
11	1	104884-59170	GASKET		1	1		1			
11-1	1	23414-080000	GASKET, 8X1.0		1	1	1	1	1	R	
		(B=EXXX)	(C=EXXX)		(E=EXXX)						
12	1	124450-39240	RETAINER, PIPE		1	1	1	1	1		
13	1	128170-39010	PIPE, OIL	1							
14	1	128170-39020	PIPE ASSY, OIL	1							
15	1	103854-39140	BOLT, PIPE JOINT	4							
16	1	23414-120000	GASKET, 12X1.0	8							
17	1	105582-39140	RETAINER	1							

N:Old $\frac{\text{Yes}}{\text{No}}$ New, Q:Old $\frac{\text{No}}{\text{Yes}}$ New, R:Old $\frac{\text{Yes}}{\text{Yes}}$ New, S:Old $\frac{\text{No}}{\text{No}}$ New, W:Add, Z:Discontinued, F:Interchangeable by set, K:Q'ty Change

Copyright (C) YANMAR CO., LTD. All RightsReserved.

Fig.26. COOLING SEA WATER PUMP

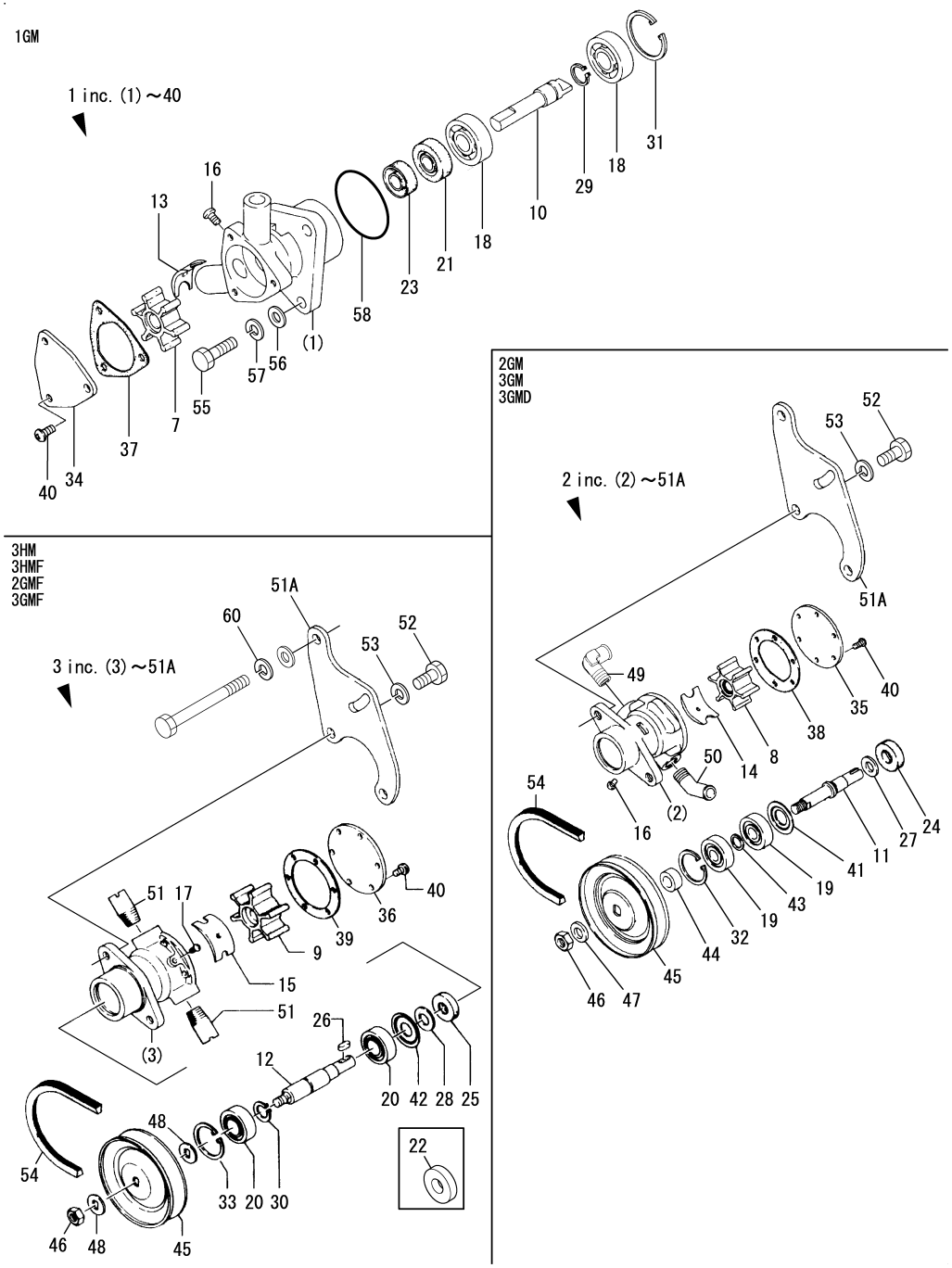

(A)=1GM (B)=2GM(F) (C)=3GM(F) (D)=3GMD (E)=3HM (F)=3HMF

No.	Lev.	Parts No.	Description	Q'ty (A)	(B)	(C)	(D)	(E)	(F)	I	R
1	1	128170-42000	PUMP ASSY, WATER	1							
2	1	128270-42000	PUMP ASSY, WATER		1	1	1				
3	1	121575-42000	PUMP ASSY, WATER		1	1		1	1		
7	2	128170-42070	IMPELLER	1							
8	2	104211-42070	IMPELLER		1	1	1				
9	2	124223-42091	IMPELLER		1	1		1	1		
10	2	128170-42060	SHAFT, IMPELLER	1							
11	2	124070-42060	SHAFT, IMPELLER		1	1	1				
12	2	121575-42020	SHAFT		1	1		1	1		
13	2	128170-42050	CAM	1							
14	2	104211-42050	CAM		1	1	1				
15	2	124323-42100	CAM, IMPELLER		1	1		1	1		
16	2	26554-040062	SCREW, M4X 6	1	1	1	1				
17	2	26554-040102	SCREW, M4X10		1	1		1	1		
18	2	24101-060004	BEARING, BALL 6000	2							
19	2	24107-062004	BEARING, BALL 6200ZZ		2	2	2				
20	2	24107-062024	BEARING, BALL 6202ZZ		2	2		2	2		
21	2	128170-42110	SEAL, TC8227	1							
22	2	124223-42160	SEAL, TC15X30X7					1	1	Z	
					(E=*1979.12.)			(F=*1979.12.)			
23	2	124240-91450	SEAL, OIL	1							
24	2	104211-42100	SEAL, TC10X25X7		1	1	1				
25	2	124223-42080	SEAL, TC13X28X7		1	1		1	1		
26	2	124223-42040	KEY		1	1		1	1		
27	2	104211-42110	PLATE		1	1	1				
28	2	124223-42070	PIECE		1	1		1	1		
29	2	22242-000100	RING, 10	1							
30	2	22242-000150	RING, 15		1	1		1	1		
31	2	22252-000260	RING, 26	1							
32	2	22252-000300	RING, 30		1	1	1				
33	2	22252-000350	RING, 35		1	1		1	1		
34	2	128170-42080	COVER	1							
35	2	104211-42080	COVER		1	1	1				
36	2	121575-42150	COVER		1	1		1	1		
37	2	128170-42090	GASKET	1							
38	2	104211-42090	GASKET		1	1	1				
39	2	124223-42110	GASKET, WATER PUMP		1	1		1	1		
40	2	26554-040082	SCREW, M4X 8	3	6	6	6	6	6		
41	2	104211-42120	COVER, BEARING		1	1	1				
42	2	121575-42120	COVER, BEARING		1	1		1	1	W	
					(E=*1979.12.)			(F=*1979.12.)			
43	2	104211-42130	PIECE, DISTANCE		1	1	1				
44	2	124070-42410	COLLAR		1	1	1				
45	2	124070-42400	V-PULLEY		1	1	1	1	1		
46	2	26347-080002	NUT, M8		1	1	1	1	1		
47	2	124070-42420	WASHER		1	1	1	1			
48	2	124070-42420	WASHER		2	2		2	2		
49	2	105583-49910	ELBOW, PT1/4		1	1	1				
50	2	128270-49300	ELBOW, 1/4		1	1	1				
51	2	121575-49300	JOINT, PIPE		2	2		2	2		
51A	2	128270-42150	BRACKET, PUMP		1	1	1	1	1		

N:Old $\xleftarrow[\text{No}]{\text{Yes}}$ New, Q:Old $\xleftarrow[\text{Yes}]{\text{No}}$ New, R:Old $\xleftarrow[\text{Yes}]{\text{Yes}}$ New, S:Old $\xleftarrow[\text{No}]{\text{No}}$ New, W:Add, Z:Discontinued, F:Interchangeable by set, K:Q'ty Change

++ CONTINUE ++

Copyright (C) YANMAR CO., LTD. All RightsReserved.

Fig.26. COOLING SEA WATER PUMP

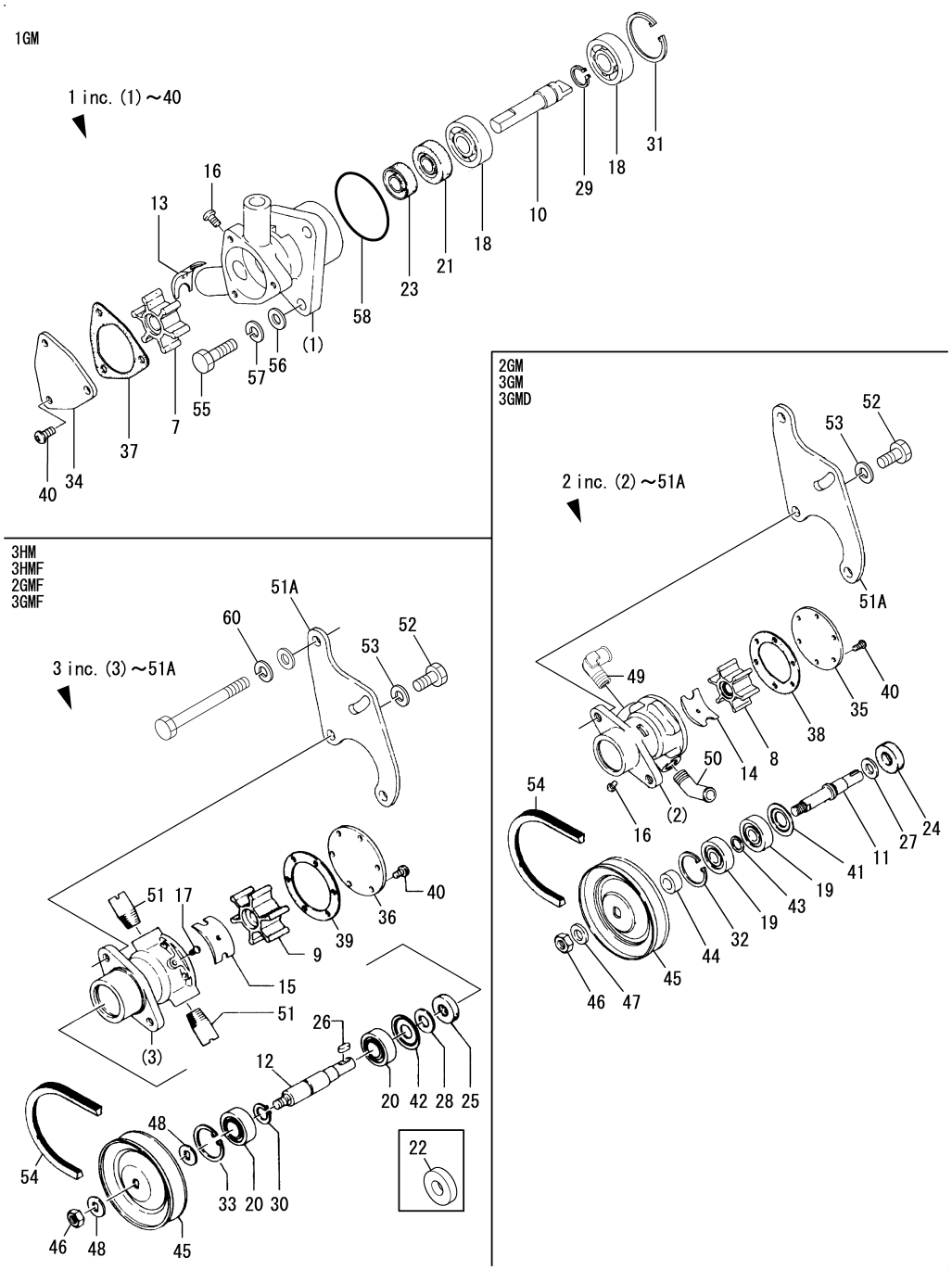

(A)=1GM (B)=2GM(F) (C)=3GM(F) (D)=3GMD (E)=3HM (F)=3HMF

No.	Lev.	Parts No.	Description	Q'ty (A)	(B)	(C)	(D)	(E)	(F)	I	R
52	1	26116-080142	BOLT 8X14		2	2	2	2	2		
53	1	22217-080000	WASHER, SPRING 8		2	2	2	2	2		
54	1	104511-78780	V-BELT, M/19		1	1	1	1	1		
55	1	26116-060202	BOLT, M6X 20 PLATED	3							
56	1	22217-060000	WASHER, SPRING 6	3							
57	1	22117-060000	WASHER, 6	3							
58	1	24321-000350	O-RING, 1AG35.0	1							
60	1	22217-080000	WASHER, SPRING 8		2	2		2	2	W	

N:Old ←Yes/No→ New, Q:Old ←No/Yes→ New, R:Old ←Yes/Yes→ New, S:Old ←No/No→ New, W:Add, Z:Discontinued, F:Interchangeable by set, K:Q'ty Change

Copyright (C) YANMAR CO., LTD. All RightsReserved.

Fig.27. COOLING FRESH WATER PUMP

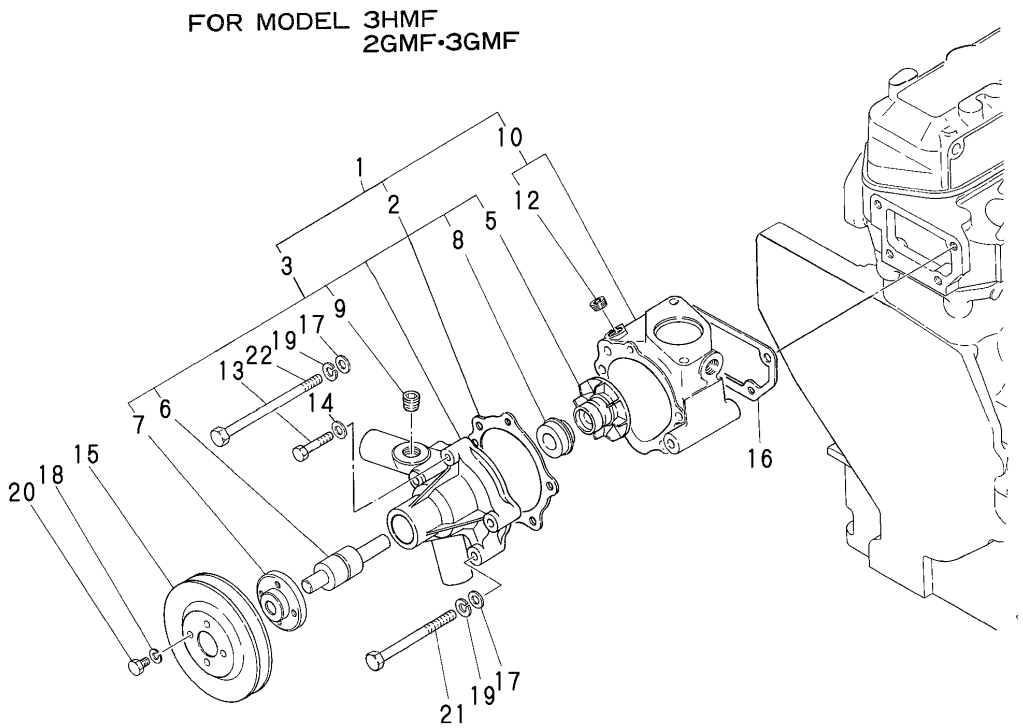

(A)=1GM (B)=2GM(F) (C)=3GM(F) (D)=3GMD (E)=3HM (F)=3HMF

No.	Lev.	Parts No.	Description	Q'ty (A)	(B)	(C)	(D)	(E)	(F)	I	R
1	1	128695-42010	PUMP ASSY, WATER		1	1			1		
2	2	121000-42050	GASKET, WATER PUMP		1	1			1		
3	2	121000-42100	PUMP ASSY, WATER		1	1			1		
5	3	129350-42200	IMPELLER		1	1			1		
6	3	121450-42240	BEARING, SHAFT		1	1			1		
7	3	121450-42260	FLANGE, V-PULLEY		1	1			1		
8	3	121450-42310	SEAL, MECHANICAL		1	1			1		
9	3	23871-030000	PLUG, R03		1	1			1		
10	2	728695-43500	BRACKET ASSY		1	1			1		
12	3	23871-020000	PLUG, R02		1	1			1		
13	2	26117-060352	BOLT M 6X 35		1	1			1		
14	2	22117-060000	WASHER, 6		1	1			1		
15	1	128695-42350	V-PULLEY		1	1			1		
16	1	121450-44410	GASKET		1	1			1		
17	1	22117-080000	WASHER, 8		4	4			4		
18	1	22217-060000	WASHER, SPRING 6		4	4			4		
19	1	22217-080000	WASHER, SPRING 8		4	4			4		
20	1	26116-060102	BOLT, M6X 10 PLATED		4	4			4		
21	1	26116-080952	BOLT, M8X 95 PLATED		3	3			3		
22	1	26116-081152	BOLT, M8X115 PLATED		1	1			1		

N:Old $\overset{\text{Yes}}{\underset{\text{No}}{\leftrightarrows}}$ New, Q:Old $\overset{\text{No}}{\underset{\text{Yes}}{\leftrightarrows}}$ New, R:Old $\overset{\text{Yes}}{\underset{\text{Yes}}{\leftrightarrows}}$ New, S:Old $\overset{\text{No}}{\underset{\text{No}}{\leftrightarrows}}$ New, W:Add, Z:Discontinued, F:Interchangeable by set, K:Q'ty Change

Copyright (C) YANMAR CO., LTD. All RightsReserved.

Fig.28. COOLING FRESH WATER COOLER

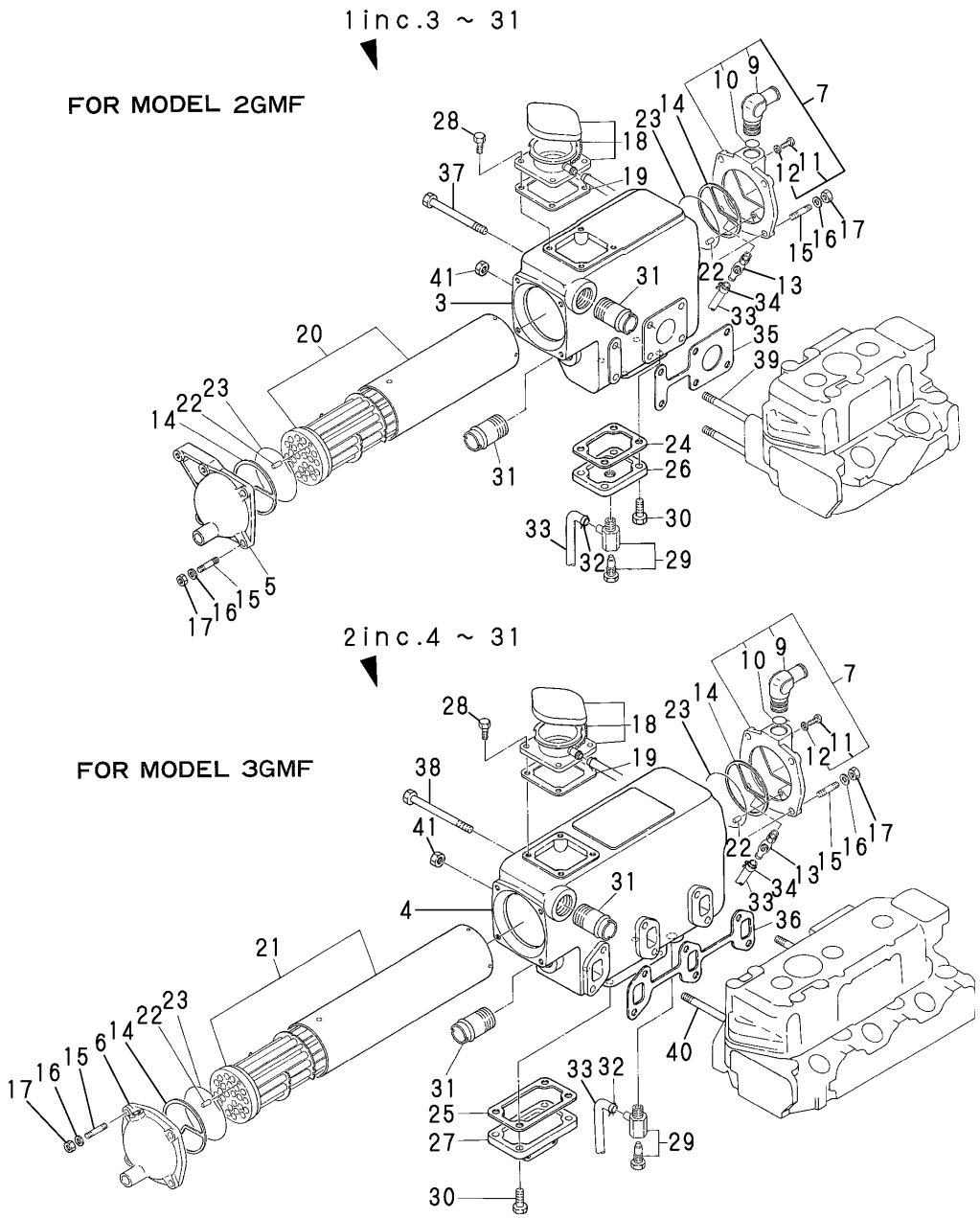

(A)=1GM (B)=2GM(F) (C)=3GM(F) (D)=3GMD (E)=3HM (F)=3HMF

No.	Lev.	Parts No.	Description	Q'ty (A)	(B)	(C)	(D)	(E)	(F)	I	R
1	1	728290-44500	COOLER ASSY, WATER		1						
2	1	728390-44500	COOLER ASSY, WATER			1					
3	2	128290-44010	BODY, COOLER		1						
4	2	128390-44010	BODY, TANK			1					
5	2	128290-44050	COVER		1						
6	2	128965-44050	COVER			1					
7	2	728690-44710	COVER ASSY		1	1					
9	3	128690-49310	ELBOW		1	1					
10	3	24311-000160	O-RING, 1AP16.0		1	1					
11	3	26554-050102	SCREW, M5X10		1	1					
12	3	23414-050000	GASKET, 5X1.0		1	1					
13	2	128695-44090	COCK		1	1					
14	2	128695-44070	GASKET		2	2					
15	2	26216-060202	STUD, M6X 20		8	8					
16	2	22117-060000	WASHER, 6		8	8					
17	2	26716-060002	NUT, M6		8	8					
18	2	123682-44190	FILLER ASSY		1	1					
19	2	123672-44200	GASKET		1	1					
20	2	128290-44400	PIPE, WATER		1						
21	2	128390-44400	CORE, COOLER			1					
22	2	124790-44470	PIN		2	2					
23	2	24311-000700	O-RING, 1AP70.0		2	2					
24	2	121450-11680	GASKET		1						
25	2	128390-44490	GASKET			1					
26	2	128290-44480	COVER, TANK		1						
27	2	128390-44480	COVER, TANK			1					
28	2	26116-060162	BOLT, M6X 16 PLATED		4	4					
29	2	43600-500290	COCK 1/4		1	1					
30	2	26116-080202	BOLT, M8X 20 PLATED		4	4					
31	2	124160-49480	JOINT, PIPE		2	2					
32	1	124460-77680	RETAINER		1	1					
33	1	23061-070300	PIPE, 7X 300		2	2					
34	1	124722-59050	CLIP, HOSE 9		1	1					
35	1	128290-13250	GASKET		1						
36	1	121450-13250	GASKET			1					
37	1	26116-080852	BOLT, M8X 85 PLATED		4						
38	1	26116-080902	BOLT, M8X 90 PLATED			4					
39	1	26216-080852	STUD, M8X 85		2						
40	1	26216-080902	STUD, M8X 90			2					
41	1	26716-080002	NUT, M8		2	2					

N:Old $\frac{\text{Yes}}{\text{No}}$ New, Q:Old $\frac{\text{No}}{\text{Yes}}$ New, R:Old $\frac{\text{Yes}}{\text{Yes}}$ New, S:Old $\frac{\text{No}}{\text{No}}$ New, W:Add, Z:Discontinued, F:Interchangeable by set, K:Q'ty Change

Copyright (C) YANMAR CO., LTD. All RightsReserved.

Fig.29. COOLING FRESH WATER COOLER(3HMF)

FOR MODEL 3HMF

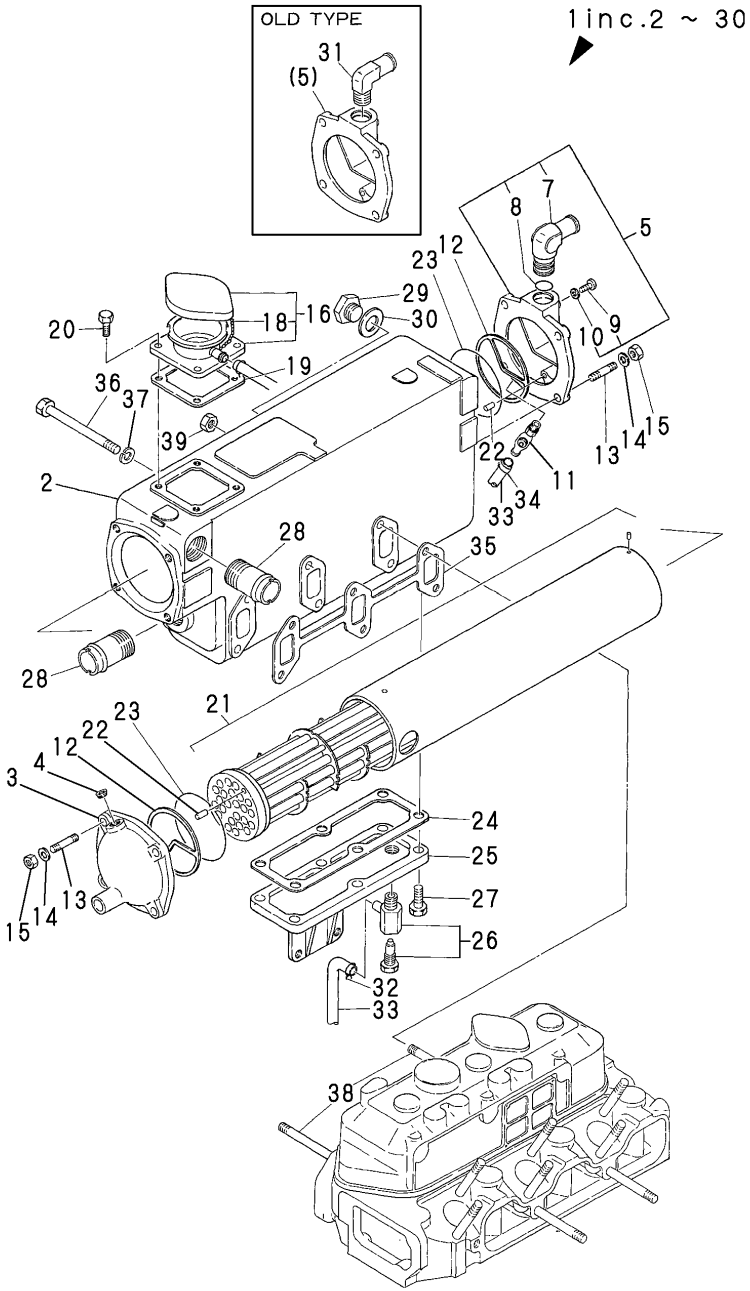

(A)=1GM (B)=2GM(F) (C)=3GM(F) (D)=3GMD (E)=3HM (F)=3HMF

No.	Lev.	Parts No.	Description	Q'ty (A)	(B)	(C)	(D)	(E)	(F)	I	R
1	1	728695-44500	COOLER ASSY, WATER						1		
1-1	1	728695-44501	COOLER ASSY, WATER						1	N	
									(F=EXXX)		
2	2	128695-44010	BODY, TANK						1		
3	2	128695-44050	COVER, COOLER						1		
4	2	23873-010000	PLUG, R01						1	Z	
									(F=EXXX)		
5	2	728690-44710	COVER ASSY						1	W	
									(F=EXXX)		
7	3	128690-49310	ELBOW						1	W	
									(F=EXXX)		
8	3	24311-000160	O-RING, 1AP16.0						1	W	
									(F=EXXX)		
9	3	26554-050102	SCREW, M5X10						1	W	
									(F=EXXX)		
10	3	23414-050000	GASKET, 5X1.0						1	W	
									(F=EXXX)		
11	2	128695-44090	COCK						1		
12	2	128695-44070	GASKET						2		
13	2	26216-060202	STUD, M6X 20						8		
14	2	22117-060000	WASHER, 6						8		
15	2	26716-060002	NUT, M6						8		
16	2	123682-44190	FILLER ASSY						1		
18	3	123682-44220	CHAIN						1		
19	2	123672-44200	GASKET						1		
20	2	26116-060162	BOLT, M6X 16 PLATED						4		
21	2	128695-44400	PIPE ASSY, COOLING						1		
22	2	124790-44470	PIN						2		
23	2	24311-000700	O-RING, 1AP70.0						2		
24	2	120345-13160	GASKET, MANIFOLD						1		
25	2	128695-44480	COVER, TANK						1		
26	2	43600-500290	COCK 1/4						1		
27	2	26116-080202	BOLT, M8X 20 PLATED						6		
28	2	124160-49480	JOINT, PIPE						2		
29	2	23897-030002	PLUG PF3/8						1		
30	2	23414-170022	GASKET, 17X1.0						1		
31	1	124070-13300	ELBOW, PT3/8						1	Z	
									(F=EXXX)		
32	1	124460-77680	RETAINER						1		
33	1	23061-070300	PIPE, 7X 300						2		
34	1	124722-59050	CLIP, HOSE 9						1		
35	1	121550-13520	GASKET						1		
36	1	26116-080902	BOLT, M8X 90 PLATED						4		
37	1	22217-080000	WASHER, SPRING 8						4		
38	1	26216-080902	STUD, M8X 90						2		
39	1	26716-080002	NUT, M8						2		

N:Old $\overset{\text{Yes}}{\underset{\text{No}}{\leftrightarrow}}$ New, Q:Old $\overset{\text{No}}{\underset{\text{Yes}}{\leftrightarrow}}$ New, R:Old $\overset{\text{Yes}}{\underset{\text{Yes}}{\leftrightarrow}}$ New, S:Old $\overset{\text{No}}{\underset{\text{No}}{\leftrightarrow}}$ New, W:Add, Z:Discontinued, F:Interchangeable by set, K:Q'ty Change

Copyright (C) YANMAR CO., LTD. All RightsReserved.

Fig.30. SUB-TANK

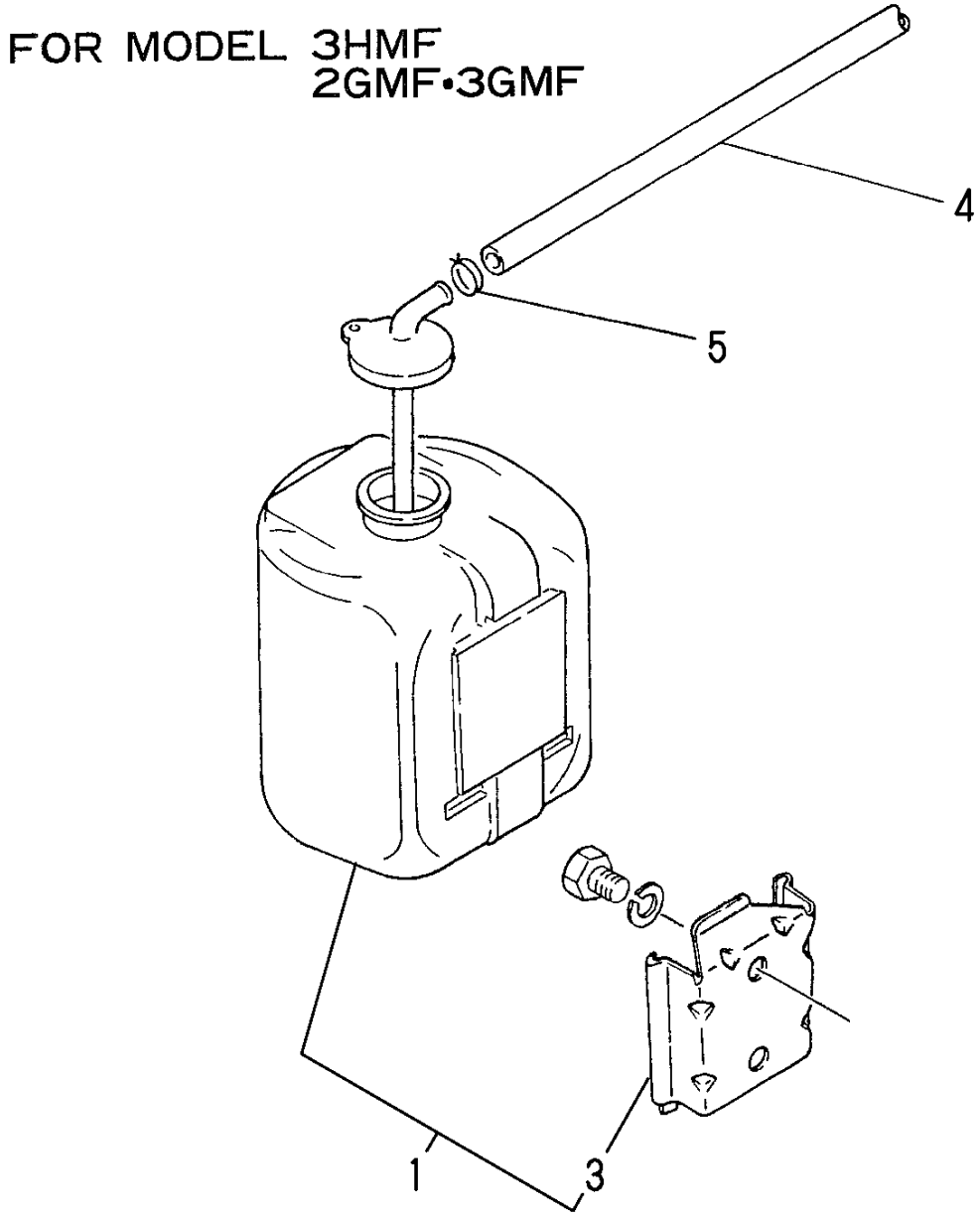

(A)=1GM (B)=2GM(F) (C)=3GM(F) (D)=3GMD (E)=3HM (F)=3HMF

No.	Lev.	Parts No.	Description	Q'ty (A)	(B)	(C)	(D)	(E)	(F)	I	R
1	1	720445-44200	TANK ASSY, SUB		1	1			1		
3	1	120445-44540	SUPPORT		1	1			1		
4	1	124790-44560	PIPE, WATER L=1000		1	1			1		
5	1	23010-013000	CLAMP, HOSE 13		2	2			2		

N:Old $\xleftarrow[\text{No}]{\text{Yes}}$ New, Q:Old $\xleftarrow[\text{Yes}]{\text{No}}$ New, R:Old $\xleftarrow[\text{Yes}]{\text{Yes}}$ New, S:Old $\xleftarrow[\text{No}]{\text{No}}$ New, W:Add, Z:Discontinued, F:Interchangeable by set, K:Q'ty Change

Copyright (C) YANMAR CO., LTD. All RightsReserved.

Fig.31. COOLING WATER PIPE

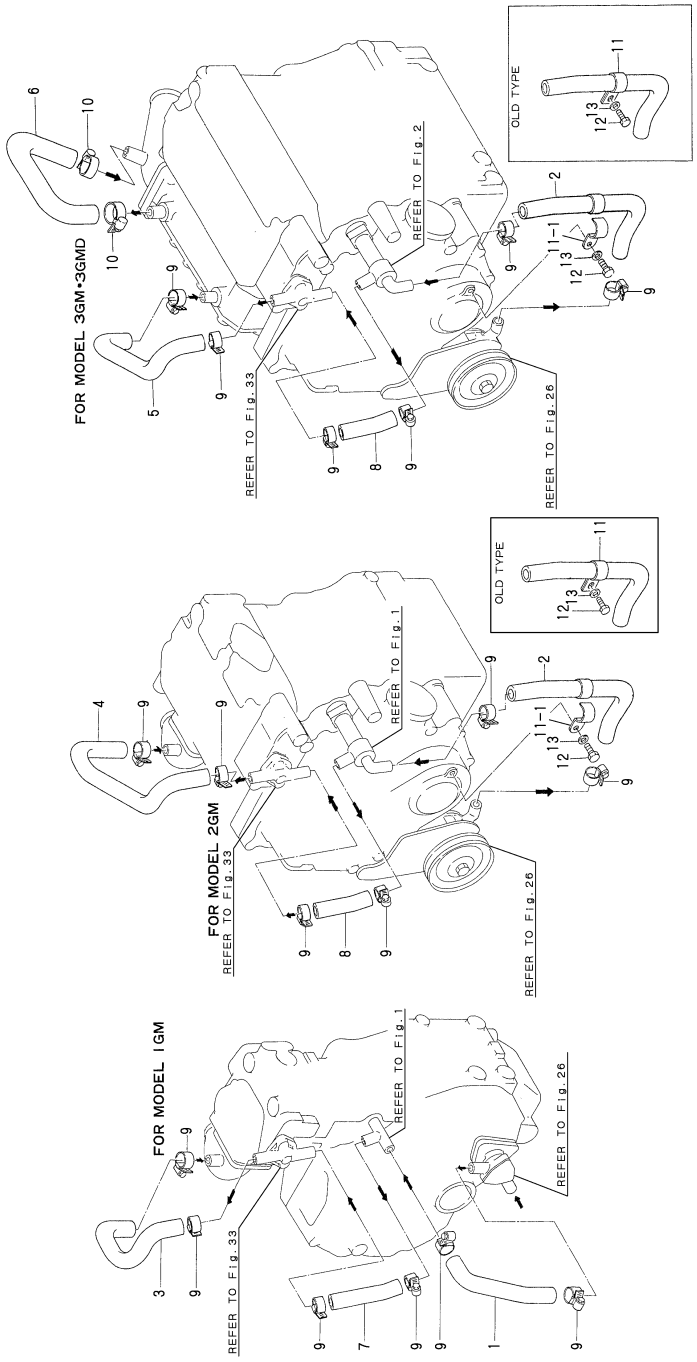

(A)=1GM (B)=2GM(F) (C)=3GM(F) (D)=3GMD (E)=3HM (F)=3HMF

No.	Lev.	Parts No.	Description	Q'ty (A)	(B)	(C)	(D)	(E)	(F)	I	R
1	1	128170-49010	PIPE, WATER	1							
2	1	128270-49010	PIPE, WATER		1	1	1				
2-1	1	128270-49110	PIPE, WATER		1	1	1			R	
		(B=E/#00643)	(C=E/#00380) (D=*1980.11)								
2-2	1	128270-49010	PIPE, WATER		1	1	1			R	
		(B=E/#02383)	(C=E/#01668) (D=*1981.07)								
3	1	128170-49040	PIPE, WATER	1							
4	1	128270-49020	PIPE, WATER		1						
5	1	128370-49020	PIPE, WATER			1	1				
6	1	128370-49030	PIPE, WATER			1					
6-1	1	121370-49040	PIPE, WATER			1	1			R	
			(C=E/#00012)								
7	1	128170-49050	PIPE, WATER	1							
8	1	128270-49050	PIPE, WATER		1	1	1				
9	1	23000-022000	CLAMP, 22	6	6	6	6				
10	1	23000-025000	CLAMP, 25			2	2				
11	1	23297-200061	CLAMP, A20X 6		1	1	1				
11-1	1	124070-49310	RETAINER		1	1	1			N	
		(B=*1980.09)	(C=*1980.09) (D=*1980.09)								
12	1	26116-060122	BOLT, M6X 12 PLATED		1	1	1				
13	1	22137-060000	WASHER, 6		1	1	1				

N:Old $\frac{\text{Yes}}{\text{No}}$ New, Q:Old $\frac{\text{No}}{\text{Yes}}$ New, R:Old $\frac{\text{Yes}}{\text{Yes}}$ New, S:Old $\frac{\text{No}}{\text{No}}$ New, W:Add, Z:Discontinued, F:Interchangeable by set, K:Q'ty Change

Copyright (C) YANMAR CO., LTD. All RightsReserved.

Fig.32. COOLING WATER PIPE(2,3GMF,3HMF)

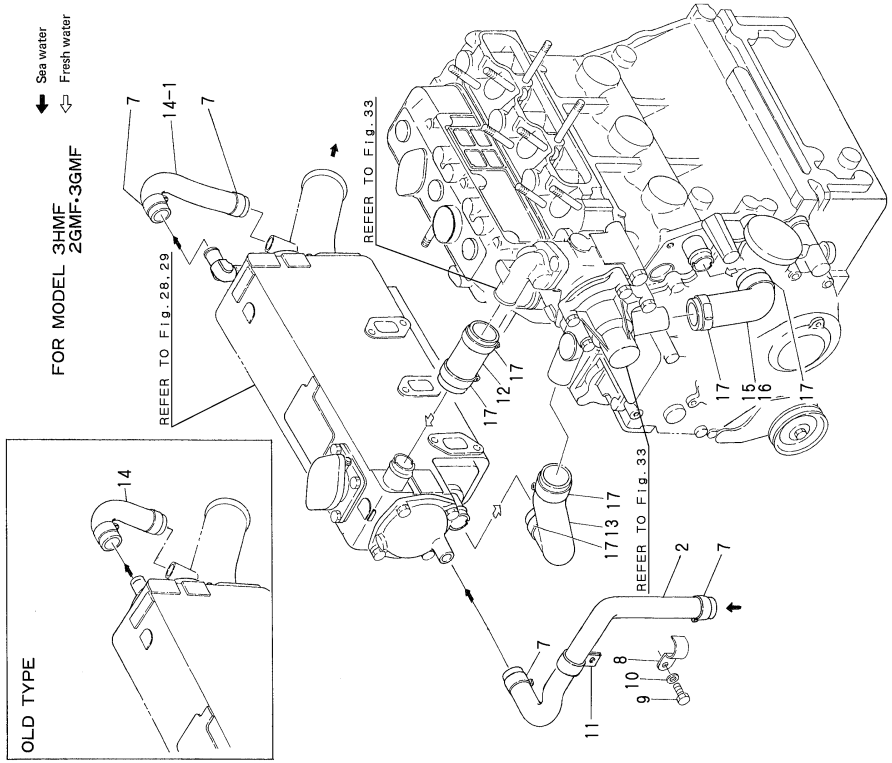

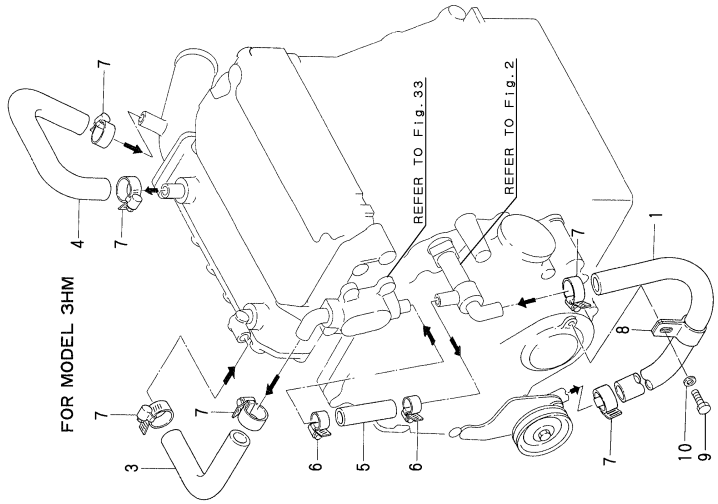

(A)=1GM (B)=2GM(F) (C)=3GM(F) (D)=3GMD (E)=3HM (F)=3HMF

No.	Lev.	Parts No.	Description	Q'ty (A)	(B)	(C)	(D)	(E)	(F)	I	R
1	1	128670-49010	PIPE, WATER					1			
2	1	128690-49010	PIPE, WATER		1	1			1		
3	1	121575-49020	PIPE, WATER					1			
4	1	128370-49030	PIPE, WATER					1			
4-1	1	121370-49040	PIPE, WATER					1		R	
				(E=E/#00019)							
5	1	128270-49050	PIPE, WATER					1			
6	1	23000-022000	CLAMP, 22					2			
7	1	23000-025000	CLAMP, 25		4	4		6	4		
8	1	121575-49310	RETAINER, PIPE					1	1		
8-1	1	124070-49310	RETAINER					1	1	N	
				(E=*1980.09)				(F=*1980.09)			
9	1	26116-060102	BOLT, M6X 10 PLATED		1	1		1	1		
10	1	22137-060000	WASHER, 6		1	1		1	1		
11	1	121575-49310	RETAINER, PIPE		1	1			1		
12	1	128695-49520	PIPE, WATER		1	1			1		
13	1	128695-49530	PIPE, WATER		1	1			1		
14	1	128695-49020	PIPE, WATER						1		
14-1	1	124770-49040	PIPE, WATER		1	1			1	S	
								(F=EXXX)			
15	1	128695-49530	PIPE, WATER						1		
16	1	128290-49510	PIPE, WATER		1	1					
17	1	23000-041000	CLAMP, 41		6	6			6		

N:Old $\frac{\text{Yes}}{\text{No}}$ New, Q:Old $\frac{\text{No}}{\text{Yes}}$ New, R:Old $\frac{\text{Yes}}{\text{Yes}}$ New, S:Old $\frac{\text{No}}{\text{No}}$ New, W:Add, Z:Discontinued, F:Interchangeable by set, K:Q'ty Change

Copyright (C) YANMAR CO., LTD. All RightsReserved.

Fig.33. THERMOSTAT

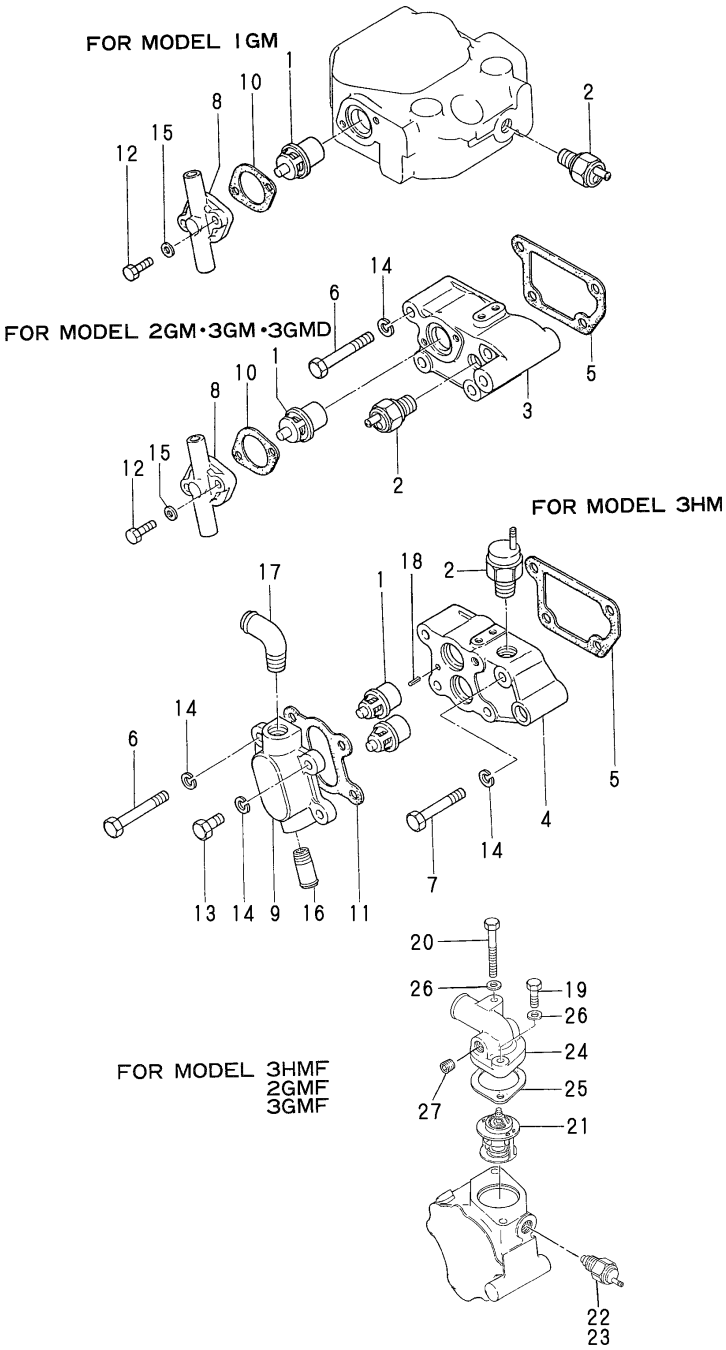

(A)=1GM (B)=2GM(F) (C)=3GM(F) (D)=3GMD (E)=3HM (F)=3HMF

No.	Lev.	Parts No.	Description	Q'ty (A)	(B)	(C)	(D)	(E)	(F)	I	R
1	1	105582-49200	THERMOSTAT	1	1	1	1	2			
2	1	127610-91340	SWITCH, 60	1	1	1	1	1			
2-1	1	128275-91340	SWITCH, 65	1	1	1	1	1		N	
	(A=E/#01256)	(B=*1980.12)	(C=*1980.12) (D=*1980.12) (E=*1980.12)								
3	1	128270-49100	BRACKET		1	1	1				
4	1	121575-49100	BRACKET, THERMOSTAT					1			
5	1	121450-44410	GASKET		1	1	1	1			
6	1	26116-080602	BOLT, M8X 60 PLATED		4	4	4	3			
7	1	26116-080502	BOLT, M8X 50 PLATED					1			
8	1	128170-49150	COVER, THERMOSTAT	1	1	1	1				
9	1	121575-49150	COVER, THERMOSTAT					1			
10	1	104211-49160	GASKET	1	1	1	1				
11	1	121575-49160	GASKET					1			
12	1	26116-060202	BOLT, M6X 20 PLATED	2	2	2	2				
13	1	26116-080202	BOLT, M8X 20 PLATED					1			
14	1	22217-080000	WASHER, SPRING 8		4	4	4	5			
15	1	22117-060000	WASHER, 6	2	2	2	2				
16	1	104271-49060	JOINT, PIPE					1			
17	1	124070-13300	ELBOW, PT3/8					1			
18	1	22351-040008	PIN, SPRING 4.0X 8					1			
19	1	26116-080282	BOLT, M8X 28 PLATED		1	1			1		
20	1	26116-080652	BOLT, M8X 65 PLATED		1	1			1		
21	1	121750-49800	THERMOSTAT		1	1			1		
22	1	127610-91350	SWITCH, 95		1	1			1		
23	1	127610-91360	SWITCH, 106		1	1			1		
24	1	128690-49530	COVER, THERMOSTAT		1	1			1		
25	1	124736-49540	GASKET		1	1			1		
26	1	22137-080000	WASHER, 8		2	2			2		
27	1	23871-030000	PLUG, R03		1	1			1		

N:Old ←Yes/No→ New, Q:Old ←No/Yes→ New, R:Old ←Yes/Yes→ New, S:Old ←No/No→ New, W:Add, Z:Discontinued, F:Interchangeable by set, K:Q'ty Change

Copyright (C) YANMAR CO., LTD. All RightsReserved.

Fig.34. FUEL INJECTION PUMP

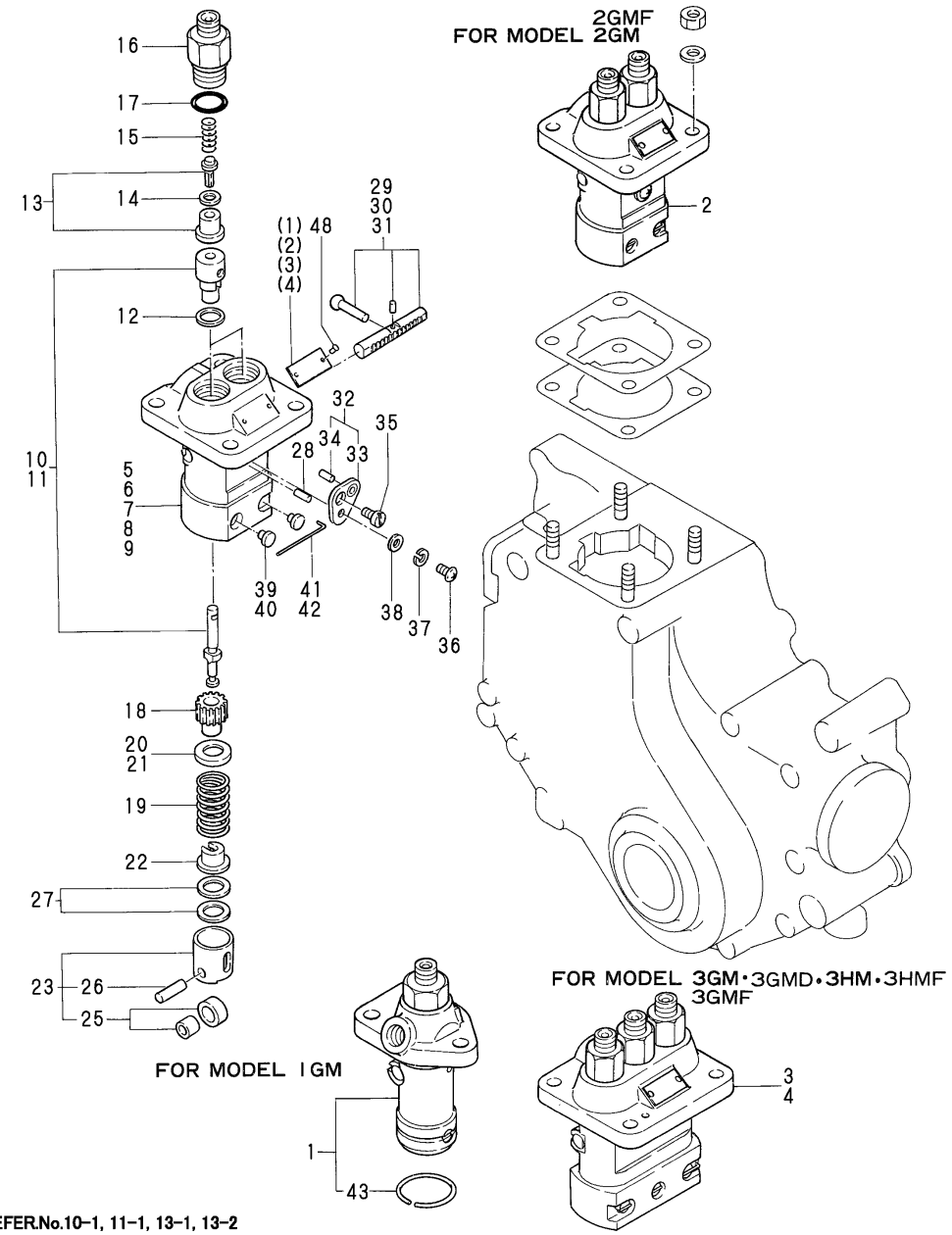

(A)=1GM (B)=2GM(F) (C)=3GM(F) (D)=3GMD (E)=3HM (F)=3HMF

No.	Lev.	Parts No.	Description	Q'ty (A)	(B)	(C)	(D)	(E)	(F)	I	R
1	1	728170-51700	PUMP ASSY, INJECTION	1							
1-1	1	728170-51101	PUMP ASSY, INJECTION	1						N	
	(A=E/#02350)										
2	1	728270-51700	PUMP ASSY, INJECTION		1						
2-1	1	728270-51101	PUMP ASSY, INJECTION		1					N	
		(B=E/#02252)									
3	1	728370-51700	PUMP ASSY, INJECTION			1	1				
3-1	1	728370-51101	PUMP ASSY, INJECTION			1	1			N	
			(C=*1981.07) (D=E/#01615)								
4	1	721575-51700	PUMP ASSY, INJECTION					1	1		
4-1	1	728696-51100	PUMP ASSY, INJECTION					1	1	N	
				(E=E/#00991)				(F=E/#00023)			
5	2	128170-51010	BODY, FUEL PUMP	1							
6	2	124950-51010	BODY, FUEL PUMP		1						
7	2	128370-51010	BODY, FUEL PUMP			1	1				
8	2	121450-51010	BODY ASSY, PUMP					1	1		
9	2	128370-51010	BODY, FUEL PUMP					1	1		
10	2	128170-51100	PLUNGER ASSY	1	2	3	3				
10-1	2	128170-51101	PLUNGER ASSY	1	2	3	3			S	
	(A=E/#02350)	(B=E/#02252)	(C=*1981.07) (D=E/#01615)								
11	2	121575-51100	PLUNGER ASSY					3	3		
11-1	2	128696-51100	PLUNGER ASSY					3	3	S	
				(E=E/#00991)				(F=E/#00023)			
12	2	124950-51270	GASKET	1	2	3	3	3	3		
13	2	124060-51300	VALVE ASSY, DELIVERY	1	2	3	3	3	3		
13-1	2	128170-51300	VALVE ASSY, DELIVERY	1	2	3	3			S	
	(A=E/#02350)	(B=E/#02252)	(C=*1981.07) (D=E/#01615)								
13-2	2	128696-51300	VALVE ASSY, DELIVERY					3	3	S	
				(E=E/#00991)				(F=E/#00023)			
14	2	124550-51350	GASKET, DELIVERY	1	2	3	3	3	3		
15	2	124550-51320	SPRING, DELIVERY	1	2	3	3	3	3		
16	2	124550-51341	HOLDER, DELIVERY L43	1	2	3	3	3	3		
17	2	124550-51370	O-RING	1	2	3	3	3	3		
18	2	124950-51510	PINION	1	2	3	3	3	3		
19	2	124950-51190	SPRING, PLUNGER	1	2	3	3	3	3		
20	2	124950-51170	RETAINER, SPRING A	1	2						
21	2	174307-51170	RETAINER, SPRING A			3	3	3	3		
22	2	174307-51181	RETAINER, SPRING B	1	2	3	3	3	3		
23	2	724550-51520	GUIDE, PLUNGER	1	2	3	3	3	3		
25	3	711100-51540	ROLLER ASSY	1	2	3	3	3	3		
26	3	174100-54120	PIN	1	2	3	3	3	3		
27	2	174307-51700	SHIM SET	1	2	3	3	3	3		
28	2	103854-51251	PIN, PLUNGER	1	1	1	1	1	1		
29	2	128170-51500	RACK ASSY, CONTROL	1							
30	2	124085-51500	RACK, CONTROL		1						
31	2	121450-51500	RACK, CONTROL			1	1	1	1		
32	2	124950-51640	PLATE ASSY, ADJUST		1	2	2	2	2		
33	3	124950-51650	PLATE		1	2	2	2	2		
34	3	124950-51670	PIN		1	2	2	2	2		
35	2	103854-51660	SCREW		1	2	2	2	2		
36	2	26587-050122	SCREW, M5X12		1	2	2	2	2		

N:Old $\overset{\text{Yes}}{\underset{\text{No}}{\leftrightarrow}}$ New, Q:Old $\overset{\text{No}}{\underset{\text{Yes}}{\leftrightarrow}}$ New, R:Old $\overset{\text{Yes}}{\underset{\text{Yes}}{\leftrightarrow}}$ New, S:Old $\overset{\text{No}}{\underset{\text{No}}{\leftrightarrow}}$ New, W:Add, Z:Discontinued, F:Interchangeable by set, K:Q'ty Change

REFER.No.10-1, 11-1, 13-1, 13-2

1. When replacing the plunger (10-1, 11-1) or the valve (13-1, 13-2) replace all the quantities required per engine simultaneously with new ones.
2. New type pump assembly has been supplied since 1981, July.
3. Applicable engine numbers: 1GM 02350～, 2GM 02252～, 3GMD 01615～, 3HM 00991～, 3HMF 00023～)

++ CONTINUE ++

Copyright (C) YANMAR CO., LTD. All RightsReserved.

Fig.34. FUEL INJECTION PUMP

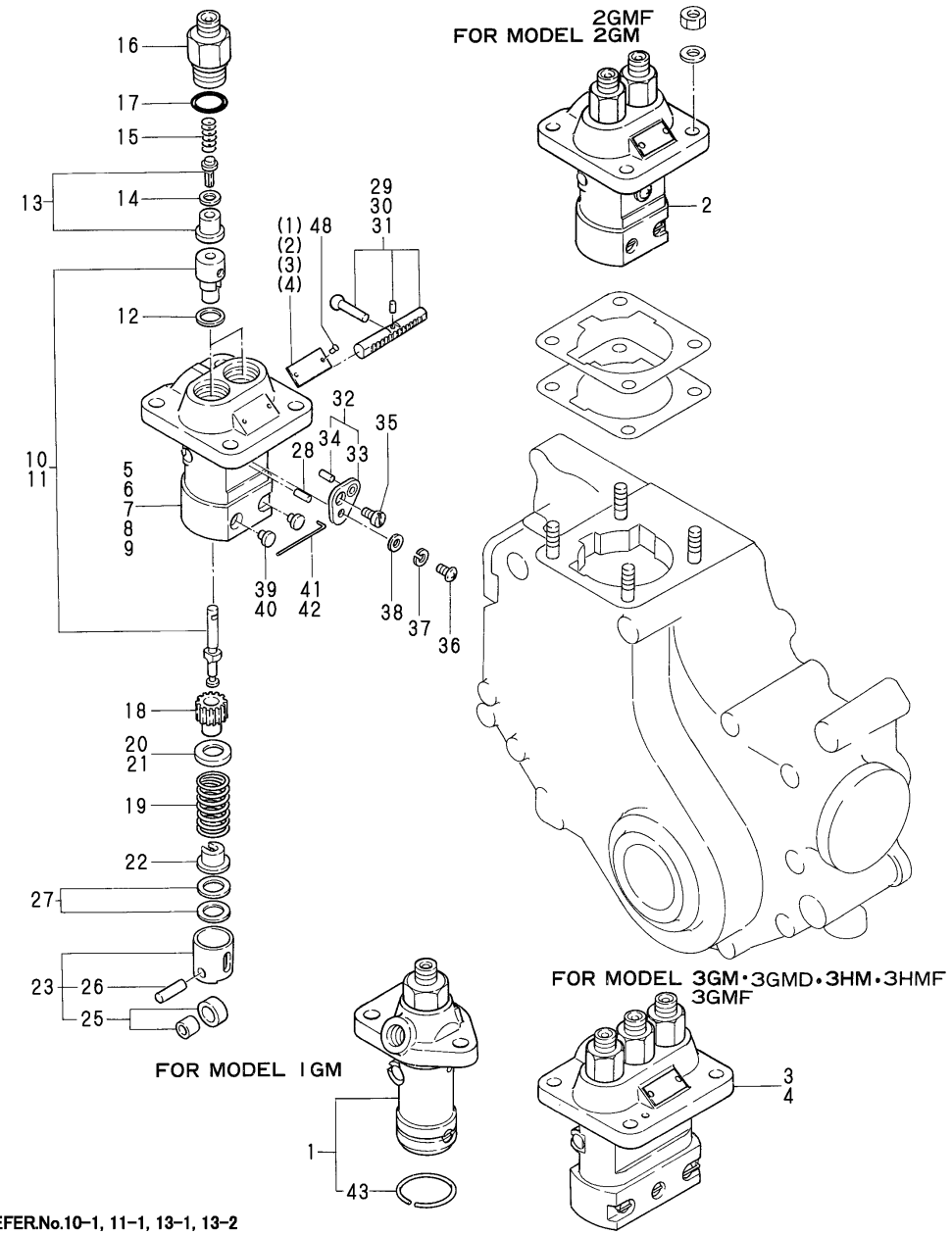

REFER.No.10-1, 11-1, 13-1, 13-2

1. When replacing the plunger (10-1, 11-1) or the valve (13-1, 13-2) replace all the quantities required per engine simultaneously with new ones.
2. New type pump assembly has been supplied since 1981, July.
3. Applicable engine numbers: 1GM 02350～, 2GM 02252～, 3GMD 01615～, 3HM 00991～, 3HMF 00023～)

(A)=1GM (B)=2GM(F) (C)=3GM(F) (D)=3GMD (E)=3HM (F)=3HMF

No.	Lev.	Parts No.	Description	Q'ty (A)	(B)	(C)	(D)	(E)	(F)	I	R
36-1	2	26587-050102	SCREW, M5X10		1	2	2	2	2	N	
		(B=EXXX)	(C=EXXX) (D=EXXX)		(E=EXXX)			(F=EXXX)			
37	2	22217-050000	WASHER, SPRING 5		1	2	2	2	2		
38	2	22137-050000	WASHER, 5		1	2	2	2	2		
39	2	104271-51450	PIECE, GUIDE	1							
40	2	124950-51450	PIECE, GUIDE		2	3	3	3	3		
41	2	174307-51460	PIN, LOCK		1						
42	2	121150-51460	PIN, GUIDE			1	1	1	1		
43	2	104271-51460	CIRCLIP	1							
48	2	124220-51890	RIVET	2	2	2	2	2	2		

N:Old ◄Yes/No► New, Q:Old ◄No/Yes► New, R:Old ◄Yes/Yes► New, S:Old ◄No/No► New, W:Add, Z:Discontinued, F:Interchangeable by set, K:Q'ty Change

Copyright (C) YANMAR CO., LTD. All RightsReserved.

Fig.35. FUEL FEED PUMP

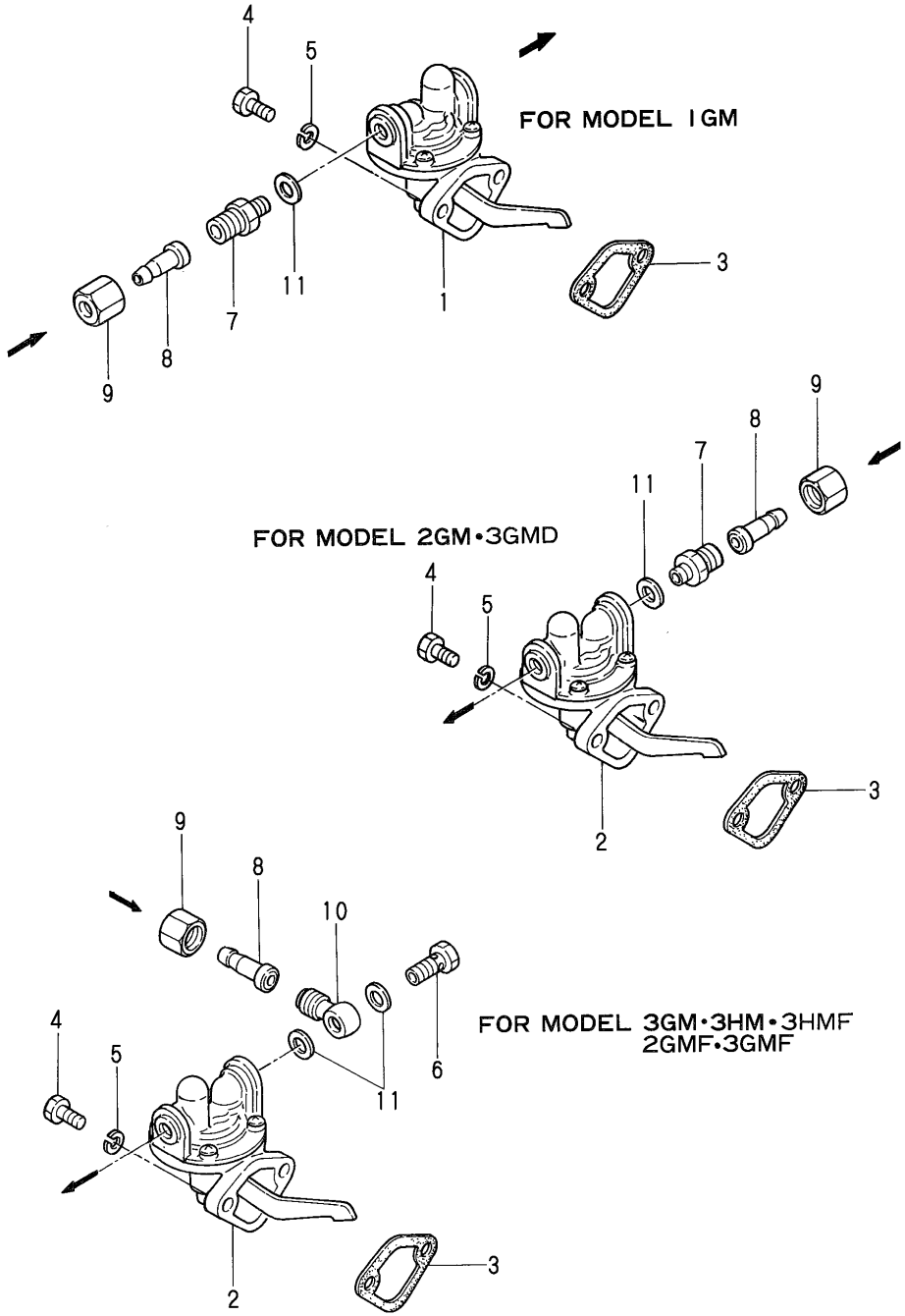

(A)=1GM (B)=2GM(F) (C)=3GM(F) (D)=3GMD (E)=3HM (F)=3HMF

No.	Lev.	Parts No.	Description	Q'ty (A)	(B)	(C)	(D)	(E)	(F)	I	R
1	1	105582-52010	PUMP ASSY, FUEL FEED	1							
2	1	121256-52020	PUMP ASSY, FUEL FEED		1	1	1	1	1		
3	1	121400-01850	GASKET	1	1	1		1			
3-1	1	121520-01850	GASKET	1	1	1	1	1	1	R	
	(A=*1981.01)	(B=*1981.01)	(C=*1981.01)	(E=*1981.01)							
4	1	26116-060162	BOLT, M6X 16 PLATED	2	2	2	2	2	2		
5	1	22217-060000	WASHER, SPRING 6	2	2	2	2	2	2		
6	1	105582-59150	BOLT, PIPE JOINT		1	1		1	1		
7	1	124772-59650	UNION	1	1		1				
8	1	124772-59660	JOINT	1	1	1	1	1	1		
9	1	124772-59670	NUT, CAP	1	1	1	1	1	1		
10	1	128370-59650	JOINT, PIPE		1	1		1	1		
11	1	23414-080000	GASKET, 8X1.0	1	1	2	1	2	2		

N:Old $\xleftarrow[\text{No}]{\text{Yes}}$ New, Q:Old $\xleftarrow[\text{Yes}]{\text{No}}$ New, R:Old $\xleftarrow[\text{Yes}]{\text{Yes}}$ New, S:Old $\xleftarrow[\text{No}]{\text{No}}$ New, W:Add, Z:Discontinued, F:Interchangeable by set, K:Q'ty Change

Copyright (C) YANMAR CO., LTD. All RightsReserved.

Fig.36. FUEL INJECTION VALVE

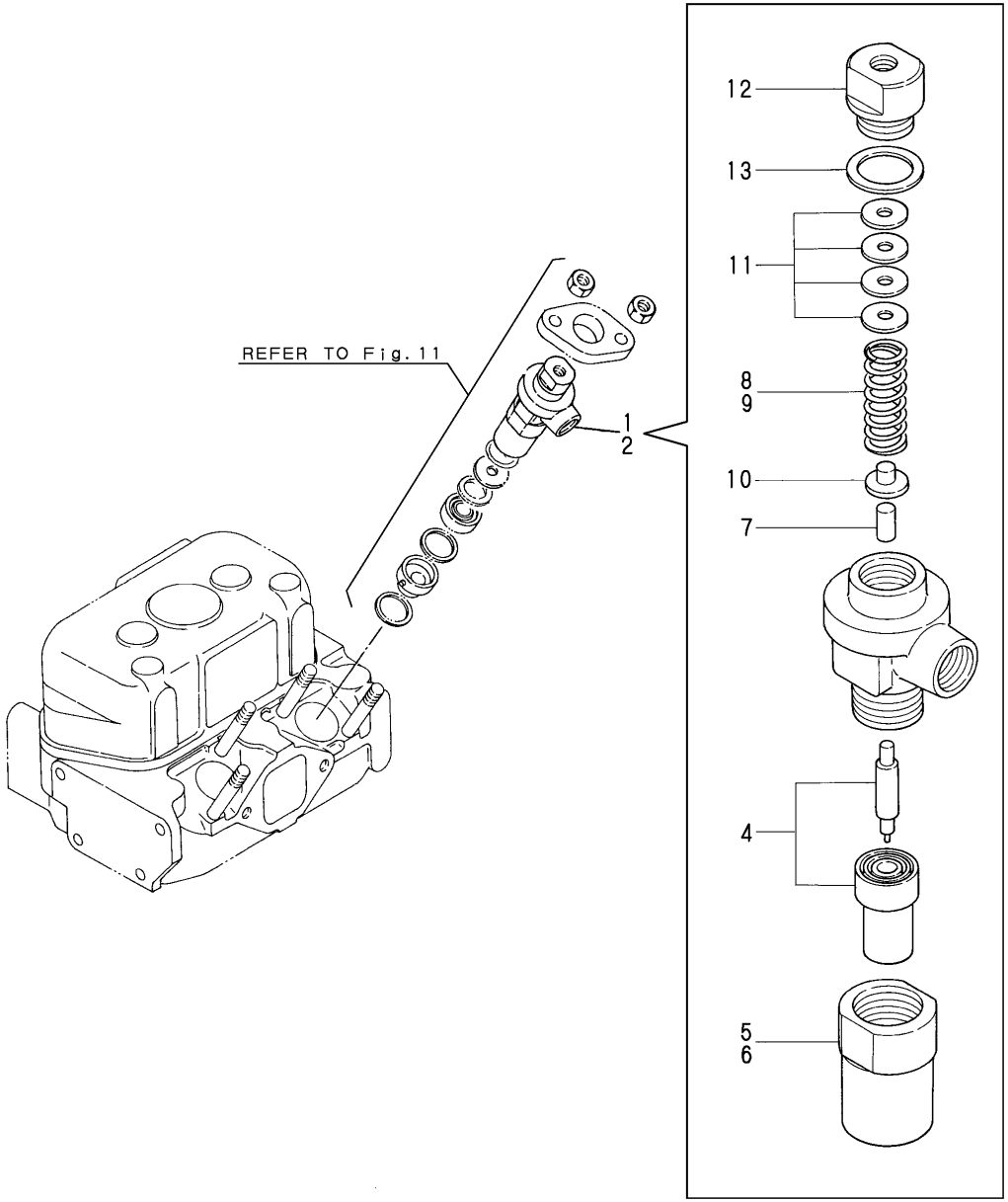

(A)=1GM (B)=2GM(F) (C)=3GM(F) (D)=3GMD (E)=3HM (F)=3HMF

No.	Lev.	Parts No.	Description	Q'ty (A)	(B)	(C)	(D)	(E)	(F)	I	R
1	1	728170-53100	VALVE ASSY,INJECTION	1	2	3	3				
2	1	724060-53101	VALVE ASSY,INJECTION					3	3		
4	2	124770-53000	VALVE ASSY,INJECTION	1	2	3	3	3	3		
5	2	128170-53080	NUT, NOZZLE	1	2	3	3				
6	2	104200-53080	NUT, NOZZLE					3	3		
7	2	113200-53110	SPINDLE, INTER	1	2	3	3	3	3		
8	2	104211-53120	SPRING, NOZZLE	1	2	3	3				
9	2	103854-53120	SPRING, NOZZLE					3	3		
9-1	2	104211-53120	SPRING, NOZZLE					3	3	R	
				(E=EXXX)				(F=EXXX)			
10	2	113200-53120	RETAINER, SPRING	1	2	3	3	3	3		
11	2	110250-53150	PLATE ASSY, ADJUST	1	2	3	3	3	3		
12	2	103854-53180	RETAINER, SPRING	1	2	3	3	3	3		
13	2	172100-53200	GASKET	1	2	3	3	3	3		

N:Old ◄Yes/No► New, Q:Old ◄No/Yes► New, R:Old ◄Yes/Yes► New, S:Old ◄No/No► New, W:Add, Z:Discontinued, F:Interchangeable by set, K:Q'ty Change

Copyright (C) YANMAR CO., LTD. All RightsReserved.

Fig.37. FUEL STRAINER

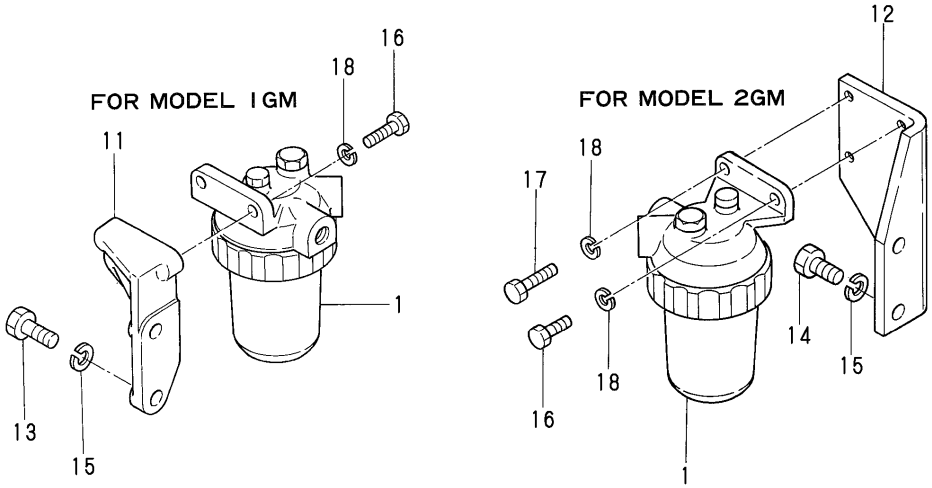

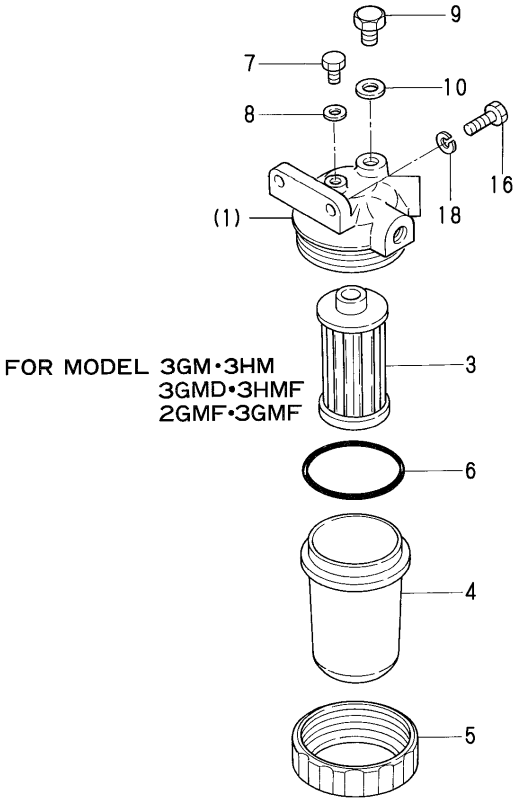

(A)=1GM (B)=2GM(F) (C)=3GM(F) (D)=3GMD (E)=3HM (F)=3HMF

No.	Lev.	Parts No.	Description	Q'ty (A)	(B)	(C)	(D)	(E)	(F)	I	R
1	1	124790-55601	STRAINER ASSY, FUEL	1	1	1	1	1	1		
3	2	104500-55710	ELEMENT	1	1	1	1	1	1		
4	2	121370-55730	CUP, STRAINER	1	1	1	1	1	1		
5	2	110250-55610	RING, RETAINING	1	1	1	1	1	1		
6	2	24341-000440	O-RING, 1AS44.0	1	1	1	1	1	1		
7	2	101720-55750	PLUG, 6	1	1	1	1	1	1		
8	2	23418-060000	GASKET, 6X1.0	1	1	1	1	1	1		
9	2	135210-51900	PLUG	1	1	1	1	1	1		
10	2	23414-080012	GASKET, 8X1.0	1	1	1	1	1	1		
11	1	128170-55610	BRACKET, STRAINER	1							
12	1	128270-55610	BRACKET, STRAINER		1						
13	1	26116-080202	BOLT, M8X 20 PLATED	2							
14	1	26116-080162	BOLT, M8X 16 PLATED		2						
15	1	22217-080000	WASHER, SPRING 8	2	2						
16	1	26116-060182	BOLT, M6X 18 PLATED	2	1	2	2	2	2		
17	1	26116-060252	BOLT, M6X 25 PLATED		1						
18	1	22217-060000	WASHER, SPRING 6	2	2	2	2	2	2		

N:Old ◄Yes/No► New, Q:Old ◄No/Yes► New, R:Old ◄Yes/Yes► New, S:Old ◄No/No► New, W:Add, Z:Discontinued, F:Interchangeable by set, K:Q'ty Change

Copyright (C) YANMAR CO., LTD. All RightsReserved.

Fig.38. FUEL PIPE

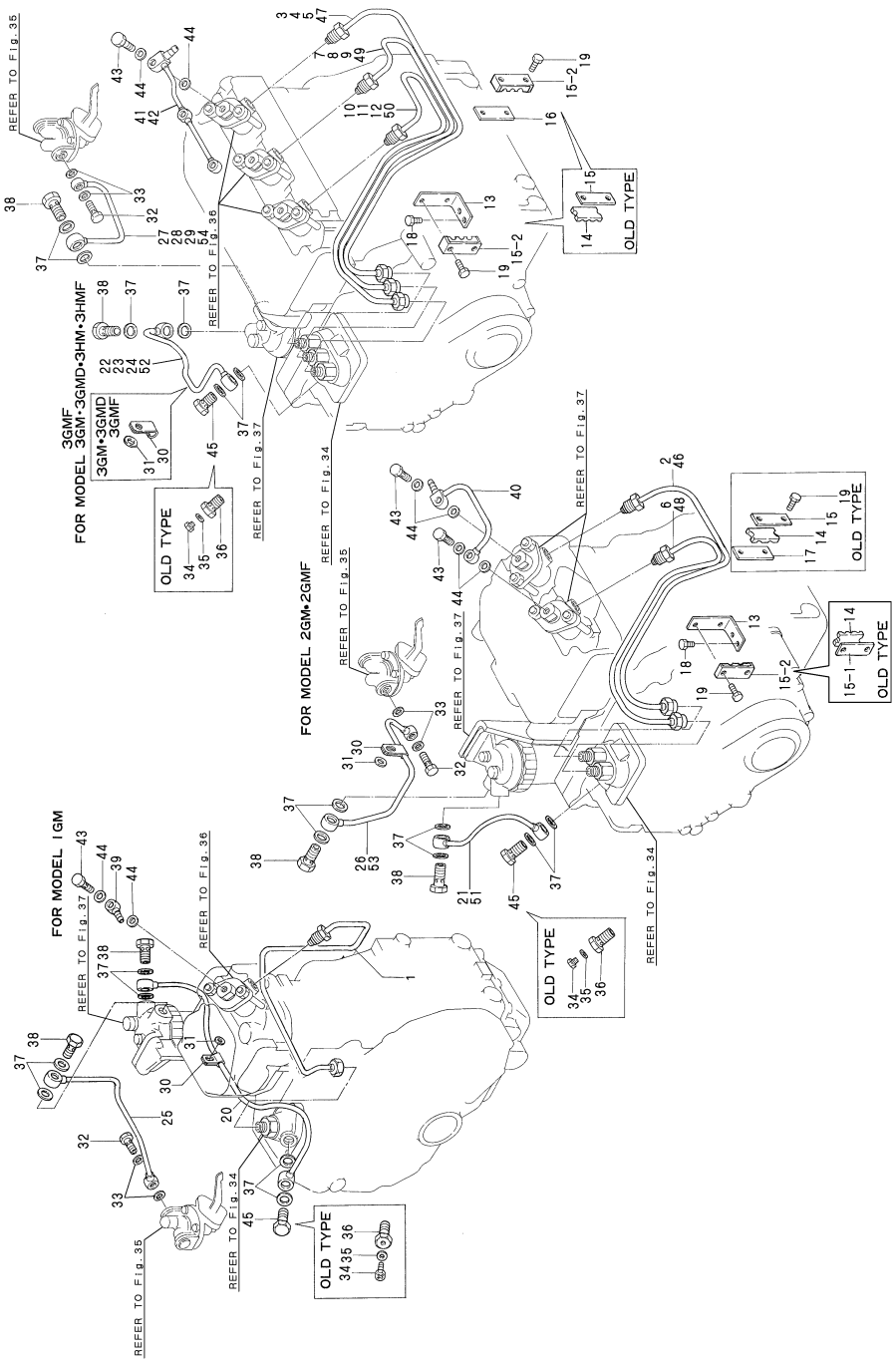

(A)=1GM (B)=2GM(F) (C)=3GM(F) (D)=3GMD (E)=3HM (F)=3HMF

No.	Lev.	Parts No.	Description	Q'ty (A)	(B)	(C)	(D)	(E)	(F)	I	R
1	1	128170-59810	PIPE ASSY, INJECTION	1							
2	1	128270-59810	PIPE ASSY, INJECTION		1						
3	1	128370-59810	PIPE ASSY, INJECTION			1	1				
4	1	121550-59810	PIPE, FUEL INJECTION					1			
5	1	128695-59810	PIPE ASSY, INJECTION						1		
6	1	128270-59820	PIPE ASSY, INJECTION		1						
7	1	128370-59820	PIPE ASSY, INJECTION			1	1				
8	1	121550-59820	PIPE ASSY, INJECTION					1			
9	1	128695-59820	PIPE ASSY, INJECTION						1		
10	1	128370-59830	PIPE ASSY, INJECTION			1	1				
11	1	121550-59830	PIPE ASSY, INJECTION					1			
12	1	128695-59830	PIPE ASSY, INJECTION						1		
13	1	121450-59850	BRACKET		1	1	1	1	1		
14	1	123325-59100	RETAINER, PIPE		2	2		2		Z	
		(B=*1980.11)	(C=*1980.11)		(E=*1980.11)						
15	1	123325-59110	COVER		2	2		2			
15-1	1	122780-59100	RETAINER		1					R	
		(B=*1980.12)									
15-2	1	123372-59100	RETAINER, PIPE		1	2	2	2	2	R	
		(B=*1980.12)	(C=*1980.12)		(E=*1980.12)						
16	1	121250-59860	BRACKET			1	1	1	1		
17	1	121250-59860	BRACKET		1					Z	
		(B=*1980.11)									
18	1	26116-060102	BOLT, M6X 10 PLATED		2	2	2	2	2		
19	1	26116-060162	BOLT, M6X 16 PLATED		4	4	4	4	4		
19-1	1	26116-060162	BOLT, M6X 16 PLATED		2					K	
		(B=EXXX)									
20	1	128170-59010	PIPE ASSY, FUEL	1							
21	1	128270-59010	PIPE ASSY, FUEL		1						
22	1	128370-59010	PIPE ASSY, FUEL			1	1				
23	1	128670-59010	PIPE ASSY, FUEL					1			
24	1	128690-59010	PIPE ASSY, FUEL						1		
25	1	128170-59080	PIPE ASSY, FUEL	1							
26	1	128270-59080	PIPE ASSY, FUEL		1						
27	1	128370-59080	PIPE, FUEL			1	1				
28	1	128670-59080	PIPE, FUEL					1			
29	1	128690-59080	PIPE						1		
30	1	124450-39240	RETAINER, PIPE	1	1	1	1				
31	1	22117-080000	WASHER, 8	1	1	1	1				
32	1	105582-59150	BOLT, PIPE JOINT	1	1	1	1	1	1		
33	1	23414-080000	GASKET, 8X1.0	2	2	2	2	2	2		
34	1	124060-59380	PLUG, 6	1	1	1	1	1	1	Z	
	(A=EXXX)	(B=EXXX)	(C=EXXX) (D=EXXX)		(E=EXXX)			(F=EXXX)			
35	1	180110-51910	GASKET, PLUG	1	1	1	1	1	1	Z	
	(A=EXXX)	(B=EXXX)	(C=EXXX) (D=EXXX)		(E=EXXX)			(F=EXXX)			
36	1	103854-59200	BOLT, M12	1	1	1	1	1	1	Z	
	(A=EXXX)	(B=EXXX)	(C=EXXX) (D=EXXX)		(E=EXXX)			(F=EXXX)			
37	1	23414-120000	GASKET, 12X1.0	6	6	6	6	6	6		
38	1	23857-060000	BOLT, JOINT 6	2	2	2	2	2	2		
39	1	104264-59030	JOINT, PIPE 8	1							
40	1	105311-59500	PIPE ASSY, RETURN		1						

N:Old $\xleftarrow[\text{No}]{\text{Yes}}$ New, Q:Old $\xleftarrow[\text{Yes}]{\text{No}}$ New, R:Old $\xleftarrow[\text{Yes}]{\text{Yes}}$ New, S:Old $\xleftarrow[\text{No}]{\text{No}}$ New, W:Add, Z:Discontinued, F:Interchangeable by set, K:Q'ty Change

++ CONTINUE ++

Copyright (C) YANMAR CO., LTD. All RightsReserved.

Fig.38. FUEL PIPE

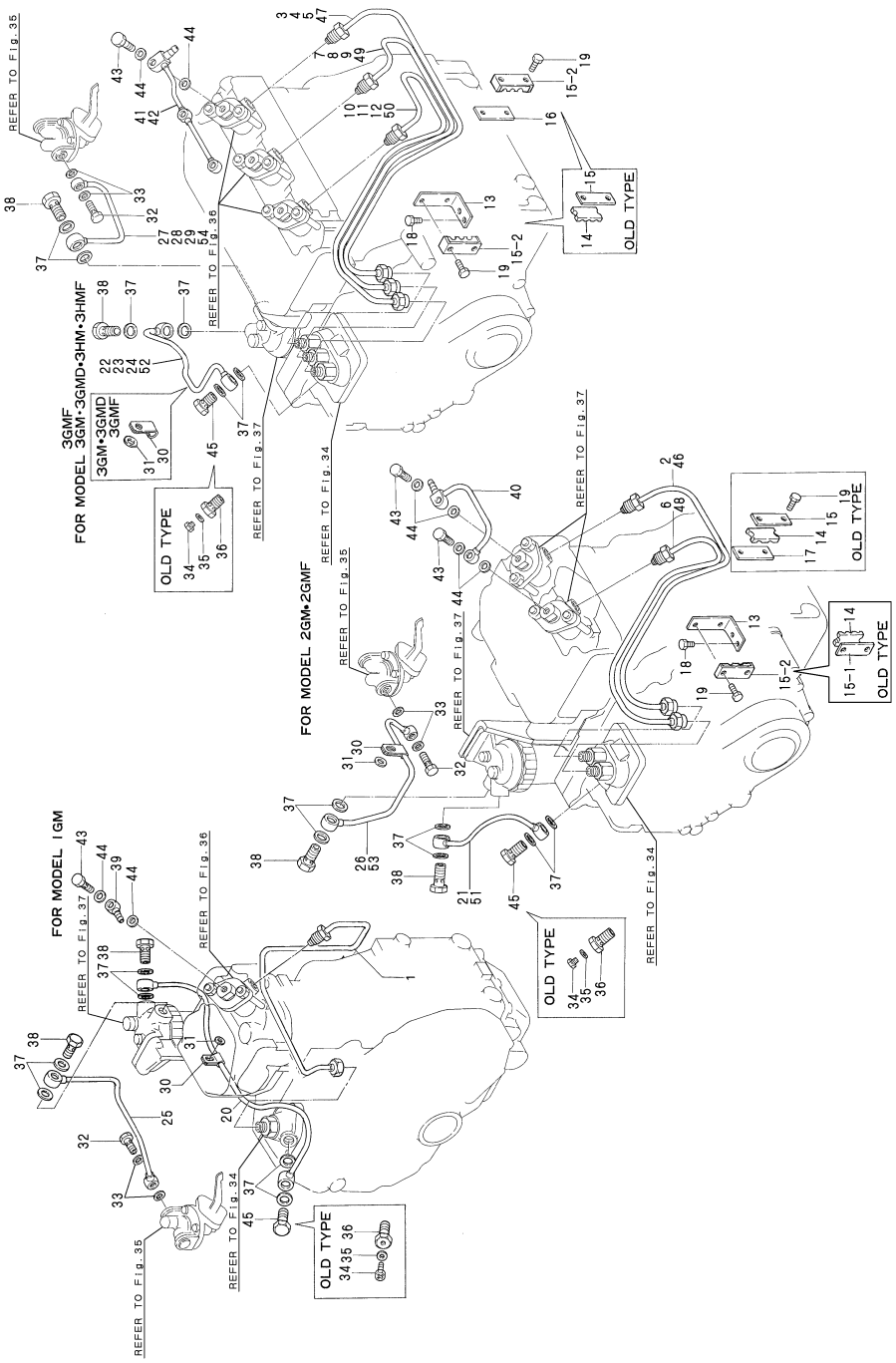

(A)=1GM (B)=2GM(F) (C)=3GM(F) (D)=3GMD (E)=3HM (F)=3HMF

No.	Lev.	Parts No.	Description	Q'ty (A)	(B)	(C)	(D)	(E)	(F)	I	R
41	1	128370-59500	PIPE ASSY, RETURN			1	1				
42	1	121575-59500	PIPE ASSY, RETURN					1	1		
43	1	101147-59810	BOLT, PIPE JOINT M8	1	2	3	3	3	3		
44	1	23414-080000	GASKET, 8X1.0	2	4	6	6	6	6		
45	1	103854-59191	BOLT ASSY, JOINT M12	1	1	1	1	1	1	W	
	(A=EXXX)	(B=EXXX)	(C=EXXX) (D=EXXX)		(E=EXXX)			(F=EXXX)			
46	1	128290-59810	PIPE ASSY, INJECTION		1						
47	1	128390-59810	PIPE ASSY, INJECTION			1					
48	1	128290-59820	PIPE ASSY, INJECTION		1						
49	1	128390-59820	PIPE ASSY, INJECTION			1					
50	1	128390-59830	PIPE ASSY, INJECTION			1					
51	1	128290-59010	PIPE ASSY, FUEL		1						
52	1	128390-59010	PIPE ASSY, FUEL			1					
53	1	128290-59080	PIPE ASSY, FUEL		1						
54	1	128390-59080	PIPE, FUEL			1					

N:Old $\xleftarrow[\text{No}]{\text{Yes}}$ New, Q:Old $\xleftarrow[\text{Yes}]{\text{No}}$ New, R:Old $\xleftrightarrow[\text{Yes}]{\text{Yes}}$ New, S:Old $\xleftrightarrow[\text{No}]{\text{No}}$ New, W:Add, Z:Discontinued, F:Interchangeable by set, K:Q'ty Change

Copyright (C) YANMAR CO., LTD. All RightsReserved.

Fig.39. GOVERNOR DRIVING

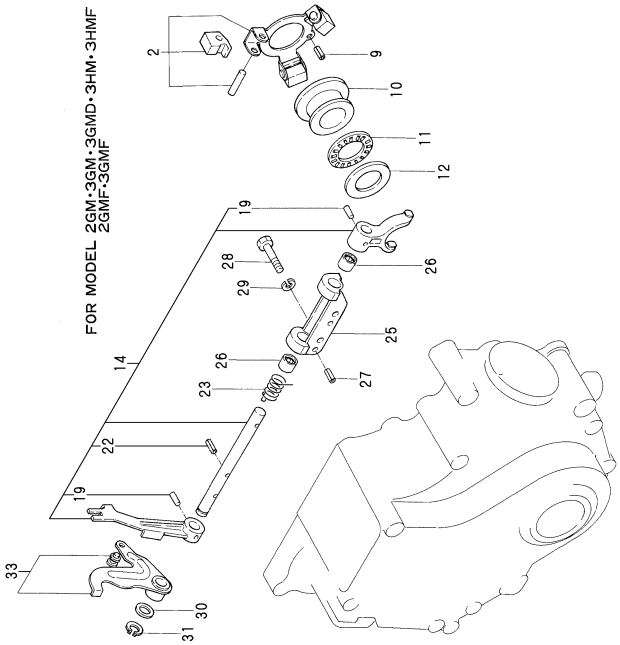

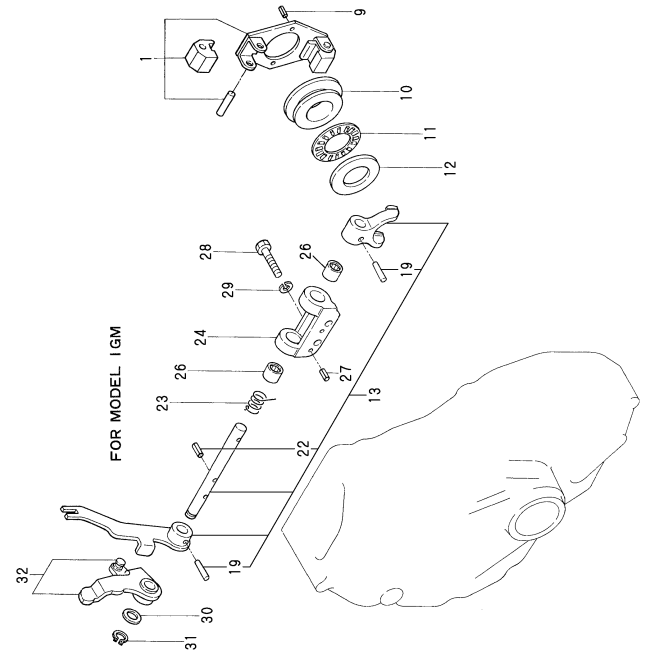

(A)=1GM (B)=2GM(F) (C)=3GM(F) (D)=3GMD (E)=3HM (F)=3HMF

No.	Lev.	Parts No.	Description	Q'ty (A)	(B)	(C)	(D)	(E)	(F)	I	R
1	1	128170-61100	WEIGHT ASSY,GOVERNOR	1							
2	1	721575-61520	SUPPORT ASSY, WEIGHT		1	1	1	1	1		
9	1	22351-040008	PIN, SPRING 4.0X 8	2	1	1	1	1	1		
10	1	121000-61600	SLEEVE, GOVERNOR	1	1	1	1	1	1		
11	1	121575-61710	BEARING, FNTA-2542	1	1	1	1	1	1		
12	1	121575-61720	COLLAR	1	1	1	1	1	1		
13	1	728170-61560	LEVER ASSY, GOVERNOR	1							
14	1	721500-61560	LEVER ASSY, GOVERNOR		1	1	1	1	1		
19	2	22322-030200	PIN, TAPER 3X20	2	2	2	2	2	2		
22	2	22351-030012	PIN, SPRING 3.0X12	1	1	1	1	1	1		
23	1	121575-66310	SPRING, STARTING	1	1	1	1	1	1		
24	1	128170-61620	SUPPORT	1							
25	1	121575-61620	SUPPORT		1	1	1	1	1		
26	1	122410-61650	BEARING, FJ-1010W	2	2	2	2	2	2		
27	1	22351-040008	PIN, SPRING 4.0X 8	2	2	2	2	2	2		
28	1	26116-060302	BOLT, M6X 30 PLATED	2	2	2	2	2	2		
29	1	22217-060000	WASHER, SPRING 6	2	2	2	2	2	2		
30	1	104211-42130	PIECE, DISTANCE	1	1	1	1	1	1		
31	1	22242-000100	RING, 10	1	1	1	1	1	1		
32	1	128170-61160	LEVER ASSY, CONTROL	1							
33	1	121575-61160	LEVER ASSY, CONTROL		1	1	1	1	1		

N:Old ←Yes/No→ New, Q:Old ←No/Yes→ New, R:Old ←Yes/Yes→ New, S:Old ←No/No→ New, W:Add, Z:Discontinued, F:Interchangeable by set, K:Q'ty Change

Copyright (C) YANMAR CO., LTD. All RightsReserved.

Fig.40. REGULATOR LINKS

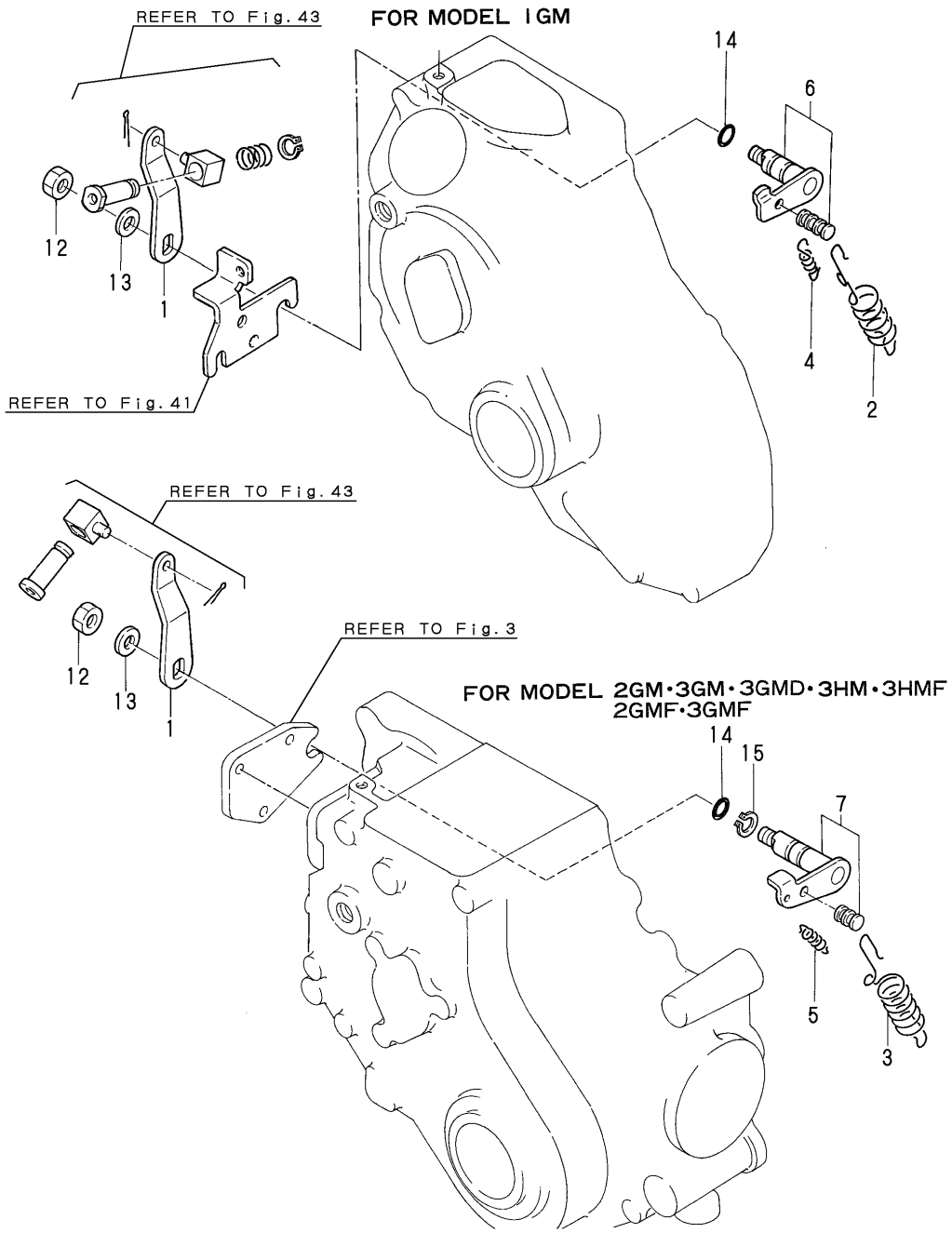

(A)=1GM (B)=2GM(F) (C)=3GM(F) (D)=3GMD (E)=3HM (F)=3HMF

No.	Lev.	Parts No.	Description	Q'ty (A)	(B)	(C)	(D)	(E)	(F)	I	R
1	1	121575-66051	HANDLE, REGULATOR	1	1	1	1	1	1		
2	1	128170-66010	SPRING, REGULATOR	1							
3	1	128270-66010	SPRING, REGULATOR		1	1	1	1	1		
4	1	128170-66200	SPRING, REGULATOR	1							
5	1	128270-66200	SPRING, REGULATOR		1	1					
5-1	1	121575-66200	SPRING, REGULATOR		1	1	1	1	1	R	
		(B=E/#00019)	(C=E/#00012)								
6	1	128170-66090	LEVER ASSY,REGULATOR	1							
7	1	121000-66090	LEVER ASSY,REGULATOR		1	1	1	1	1		
12	1	26716-080002	NUT, M8	1	1	1	1	1	1		
13	1	22117-080000	WASHER, 8	1	1	1	1	1	1		
14	1	24311-000090	O-RING, 1AP9.0	1	1	1	1	1	1		
15	1	22242-000120	RING, 12		1	1	1	1	1		

N:Old $\overset{\text{Yes}}{\underset{\text{No}}{\leftrightarrows}}$ New, Q:Old $\overset{\text{No}}{\underset{\text{Yes}}{\leftrightarrows}}$ New, R:Old $\overset{\text{Yes}}{\underset{\text{Yes}}{\leftrightarrows}}$ New, S:Old $\overset{\text{No}}{\underset{\text{No}}{\leftrightarrows}}$ New, W:Add, Z:Discontinued, F:Interchangeable by set, K:Q'ty Change

Copyright (C) YANMAR CO., LTD. All RightsReserved.

Fig.41. FUEL CONTROLLER

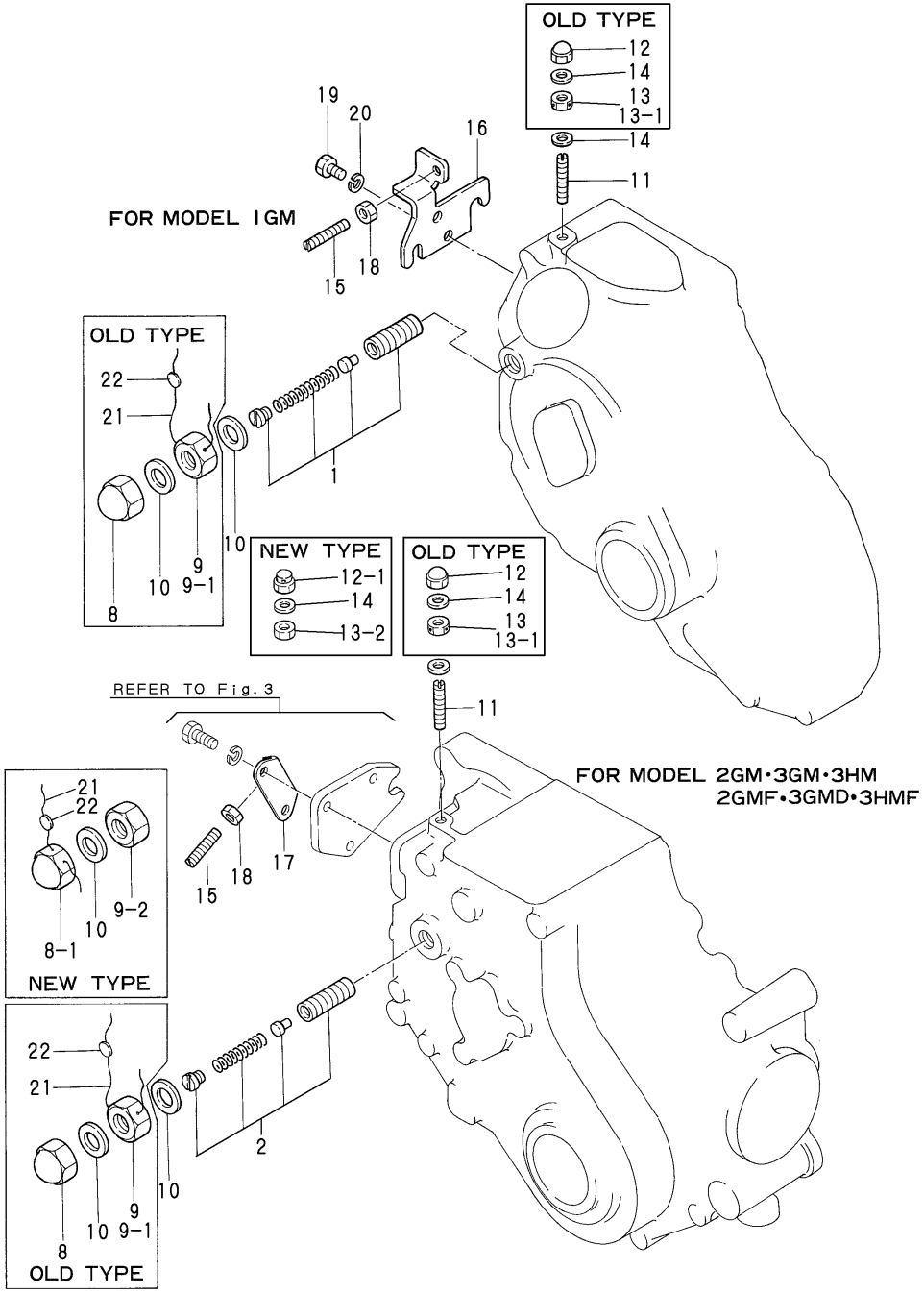

(A)=1GM (B)=2GM(F) (C)=3GM(F) (D)=3GMD (E)=3HM (F)=3HMF

No.	Lev.	Parts No.	Description	Q'ty (A)	(B)	(C)	(D)	(E)	(F)	I	R
1	1	128170-66550	LIMITER ASSY, FUEL	1							
2	1	128270-66550	LIMITER ASSY, FUEL		1	1	1	1	1		
8	1	26657-120002	NUT, CAP M12	1	1	1	1	1	1		
8-1	1	128170-66880	NUT, CAP M12	1	1	1	1	1	1	S	
	(A=EXXX)	(B=EXXX)	(C=EXXX) (D=EXXX)		(E=EXXX)			(F=EXXX)			
9	1	26756-120002	NUT, LOCK M12	1	1	1	1	1	1		
9-1	1	128170-66890	NUT, M12	1	1	1	1	1	1	R	
	(A=EXXX)	(B=EXXX)	(C=EXXX) (D=EXXX)		(E=EXXX)			(F=EXXX)			
9-2	1	26756-120002	NUT, LOCK M12	1	1	1	1	1	1	S	
	(A=EXXX)	(B=EXXX)	(C=EXXX) (D=EXXX)		(E=EXXX)			(F=EXXX)			
10	1	43400-500450	SEAL WASHER 12S	2	2	2	2	2	2		
11	1	121575-66800	SCREW	1	1	1	1	1	1		
11-1	1	121575-66830	SCREW					1	1	R	
					(E=*1980.10)			(F=*1980.10)			
12	1	26666-060002	NUT, CAP M6	1	1	1	1	1	1		
12-1	1	128170-66870	NUT, CAP M6	1	1	1	1	1	1	S	
	(A=EXXX)	(B=EXXX)	(C=EXXX) (D=EXXX)		(E=EXXX)			(F=EXXX)			
13	1	26756-060002	NUT, LOCK M6	1	1	1	1	1	1		
13-1	1	124550-66370	NUT, M6	1	1	1	1	1	1	R	
	(A=EXXX)	(B=EXXX)	(C=EXXX) (D=EXXX)		(E=EXXX)			(F=EXXX)			
13-2	1	26756-060002	NUT, LOCK M6	1	1	1	1	1	1	S	
	(A=EXXX)	(B=EXXX)	(C=EXXX) (D=EXXX)		(E=EXXX)			(F=EXXX)			
14	1	43400-500390	SEAL WASHER 6S	2	2	2	2	2	2		
15	1	121575-66800	SCREW	1	1	1	1	1	1		
16	1	128170-66850	RETAINER	1							
17	1	121575-66850	RETAINER		1	1	1	1	1		
18	1	26756-060002	NUT, LOCK M6	1	1	1	1	1	1		
19	1	26116-060142	BOLT, M6X 14 PLATED	2							
20	1	22217-060000	WASHER, SPRING 6	2							
21	1	22451-100000	WIRE, 1.0	1	1	1	1	1	1	W	
	(A=*1980.11)	(B=*1980.11)	(C=*1980.11) (D=*1980.11)		(E=*1980.11)			(F=*1980.11)			
22	1	135210-61090	LEAD	1	1	1	1	1	1	W	
	(A=*1980.11)	(B=*1980.11)	(C=*1980.11) (D=*1980.11)		(E=*1980.11)			(F=*1980.11)			

N:Old $\overset{\text{Yes}}{\underset{\text{No}}{\leftrightarrows}}$ New, Q:Old $\overset{\text{No}}{\underset{\text{Yes}}{\leftrightarrows}}$ New, R:Old $\overset{\text{Yes}}{\underset{\text{Yes}}{\leftrightarrows}}$ New, S:Old $\overset{\text{No}}{\underset{\text{No}}{\leftrightarrows}}$ New, W:Add, Z:Discontinued, F:Interchangeable by set, K:Q'ty Change

Copyright (C) YANMAR CO., LTD. All RightsReserved.

Fig.42. ENGINE STOP DEVIC

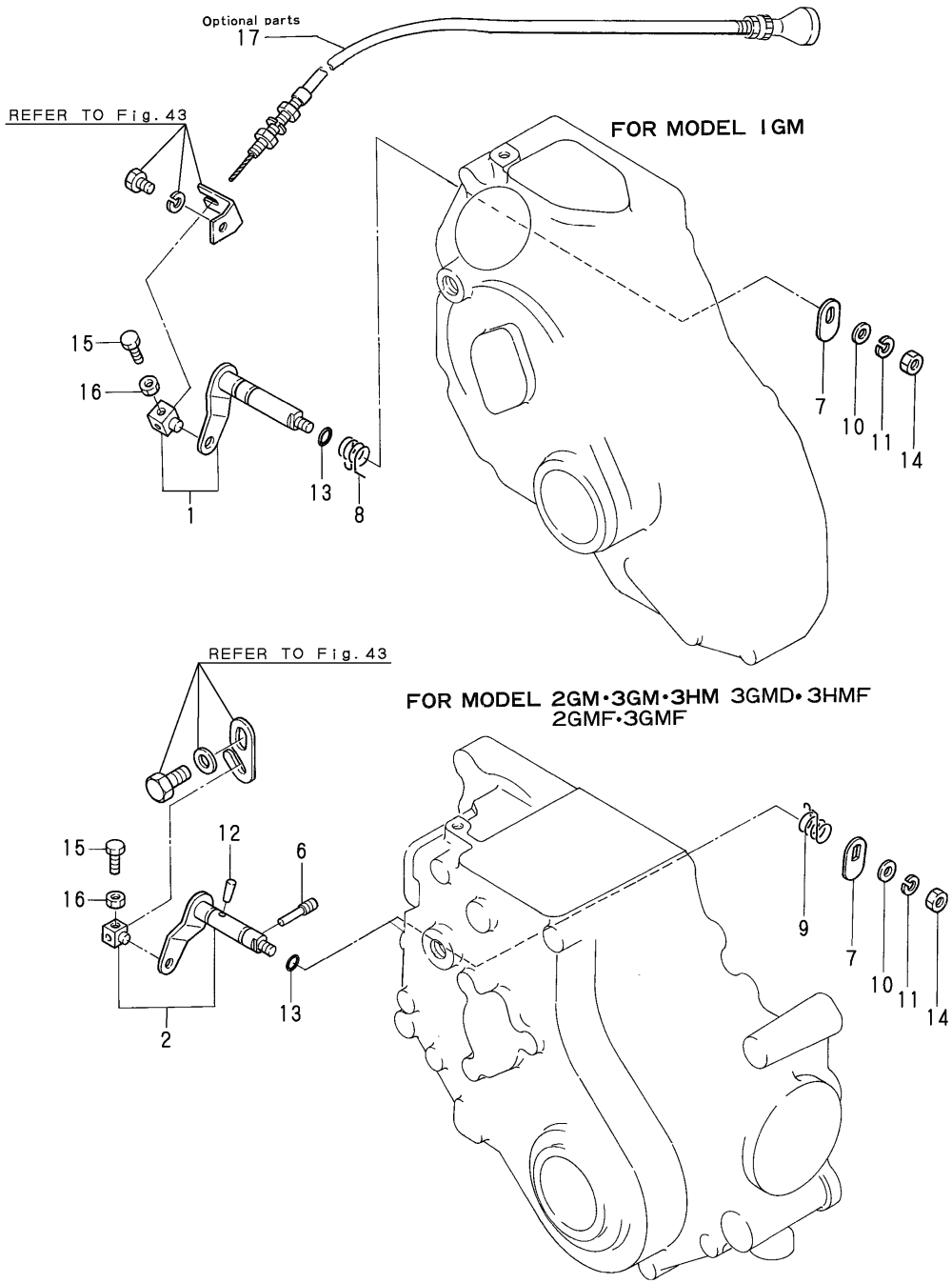

(A)=1GM (B)=2GM(F) (C)=3GM(F) (D)=3GMD (E)=3HM (F)=3HMF

No.	Lev.	Parts No.	Description	Q'ty (A)	(B)	(C)	(D)	(E)	(F)	I	R
1	1	128170-66510	LEVER ASSY, STOP	1							
2	1	121575-66510	LEVER ASSY, STOP		1	1	1	1	1		
6	1	124250-03640	SCREW		1	1	1	1	1		
7	1	121575-66550	CAM	1	1	1	1	1	1		
8	1	128170-66580	SPRING, RETURN	1							
9	1	121575-66580	SPRING, RETURN		1	1	1	1	1		
10	1	22117-060000	WASHER, 6	1	1	1	1	1	1		
11	1	22217-060000	WASHER, SPRING 6	1	1	1	1	1	1		
12	1	22322-030160	PIN, TAPER 3X16		1	1	1	1	1		
13	1	24311-000070	O-RING, 1AP7.0	1	1	1	1	1	1		
14	1	26716-060002	NUT, M6	1	1	1	1	1	1		
15	1	26116-050128	BOLT, M5X 12 PLATED	1	1	1	1	1	1		
16	1	26756-050002	NUT, LOCK M5	1	1	1	1	1	1		
17	1	104271-67550	CABLE, STOP L=3000	1	1	1	1	1	1		

N:Old $\xleftrightarrow[\text{No}]{\text{Yes}}$ New, Q:Old $\xleftrightarrow[\text{Yes}]{\text{No}}$ New, R:Old $\xleftrightarrow[\text{Yes}]{\text{Yes}}$ New, S:Old $\xleftrightarrow[\text{No}]{\text{No}}$ New, W:Add, Z:Discontinued, F:Interchangeable by set, K:Q'ty Change

Copyright (C) YANMAR CO., LTD. All RightsReserved.

Fig.43. SPEED REMOTE CONTROL

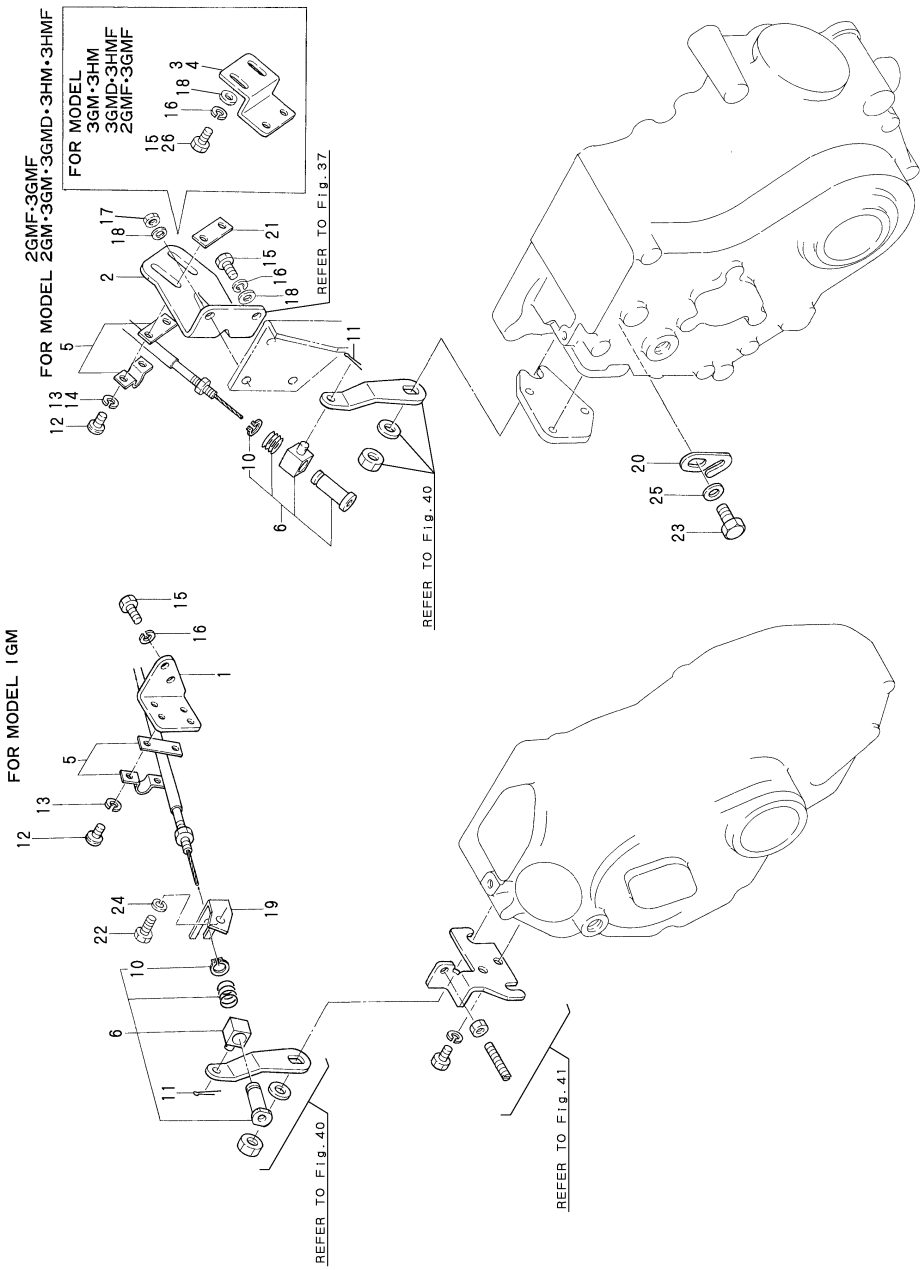

(A)=1GM (B)=2GM(F) (C)=3GM(F) (D)=3GMD (E)=3HM (F)=3HMF

No.	Lev.	Parts No.	Description	Q'ty (A)	(B)	(C)	(D)	(E)	(F)	I	R
1	1	128170-67100	BRACKET, CABLE	1							
2	1	128270-67100	BRACKET, CABLE		1						
3	1	105311-67100	BRACKET, CABLE		1	1	1	1			
4	1	128695-67100	BRACKET						1		
5	1	41710-000410	CLAMP	1	1	1	1	1	1		
6	1	105311-67200	RETAINER ASSY	1	1	1	1	1	1		
10	2	22242-000100	RING, 10	1	1	1	1	1	1		
11	1	22414-250150	PIN, COTTER 2.5X15	1	1	1	1	1	1		
12	1	26557-050122	SCREW, M5X12	2	2	2	2	2			
12-1	1	26557-050102	SCREW, M5X10					2	2	R	
			(E=EXXX)								
13	1	22217-050000	WASHER, SPRING 5	2				2	2		
14	1	22217-050000	WASHER, SPRING 5		2	2				Z	
		(B=EXXX)	(C=EXXX)								
15	1	26116-060142	BOLT, M6X 14 PLATED	2	1	2		2	2		
15-1	1	26116-060122	BOLT, M6X 12 PLATED		1	2	2			R	
		(B=EXXX)	(C=EXXX)								
16	1	22217-060000	WASHER, SPRING 6	2	2	2	2	2	2		
17	1	26716-060002	NUT, M6		1						
18	1	22137-060000	WASHER, 6		2	2	2	2	2		
19	1	128170-67580	BRACKET, CABLE	1							
20	1	121575-67580	BRACKET, CABLE		1	1	1	1	1		
21	1	121574-86320	RETAINER		1						
22	1	26116-060102	BOLT, M6X 10 PLATED	1							
23	1	26116-080142	BOLT 8X14		1	1	1	1	1		
24	1	22217-060000	WASHER, SPRING 6	1							
25	1	22137-080000	WASHER, 8		1	1	1	1	1		
26	1	26116-060122	BOLT, M6X 12 PLATED		2						1

Remarks
(1)2GMF

N:Old ←Yes/No→ New, Q:Old ←No/Yes→ New, R:Old ←Yes/Yes→ New, S:Old ←No/No→ New, W:Add, Z:Discontinued, F:Interchangeable by set, K:Q'ty Change

Copyright (C) YANMAR CO., LTD. All RightsReserved.

Fig.44. STARTING MOTOR

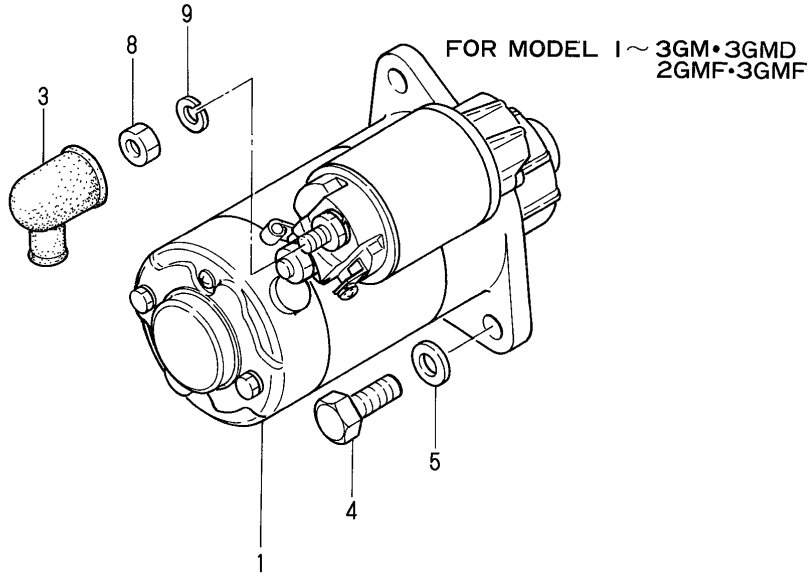

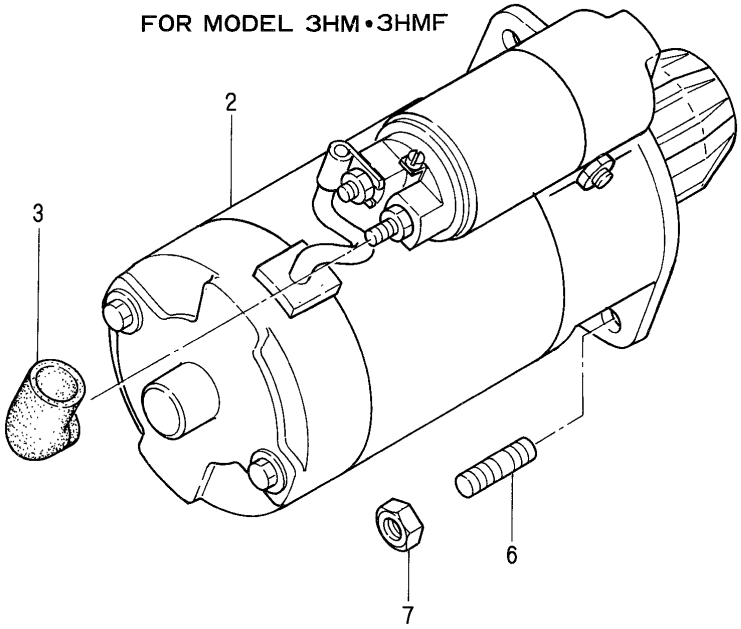

(A)=1GM (B)=2GM(F) (C)=3GM(F) (D)=3GMD (E)=3HM (F)=3HMF

No.	Lev.	Parts No.	Description	Q'ty (A)	(B)	(C)	(D)	(E)	(F)	I	R
1	1	128170-77010	STARTER, S114-303	1	1	1	1				
2	1	121370-77020	STARTER, S12-79					1	1		
3	1	124550-77030	COVER, TERMINAL	1	1	1	1	1	1		
4	1	26116-100302	BOLT, M10X 30 PLATED	2	2	2	2				
5	1	22117-100000	WASHER, 10	2	2	2	2				
6	1	26226-120252	STUD, M12X 25					2	2		
7	1	26716-120002	NUT, M12					2	2		
8	1	26716-080002	NUT, M8	1	1	1	1				
8-1	1	26756-080002	NUT, LOCK M8	1	1	1	1				R
	(A=EXXX)	(B=EXXX)	(C=EXXX) (D=EXXX)								
9	1	22217-080000	WASHER, SPRING 8	1	1	1	1				

N:Old $\xleftarrow[\text{No}]{\text{Yes}}$ New, Q:Old $\xleftarrow[\text{Yes}]{\text{No}}$ New, R:Old $\xleftarrow[\text{Yes}]{\text{Yes}}$ New, S:Old $\xleftarrow[\text{No}]{\text{No}}$ New, W:Add, Z:Discontinued, F:Interchangeable by set, K:Q'ty Change

Copyright (C) YANMAR CO., LTD. All RightsReserved.

Fig.45. STARTING MOTOR COMPONENT PART(12V/1.0KW)

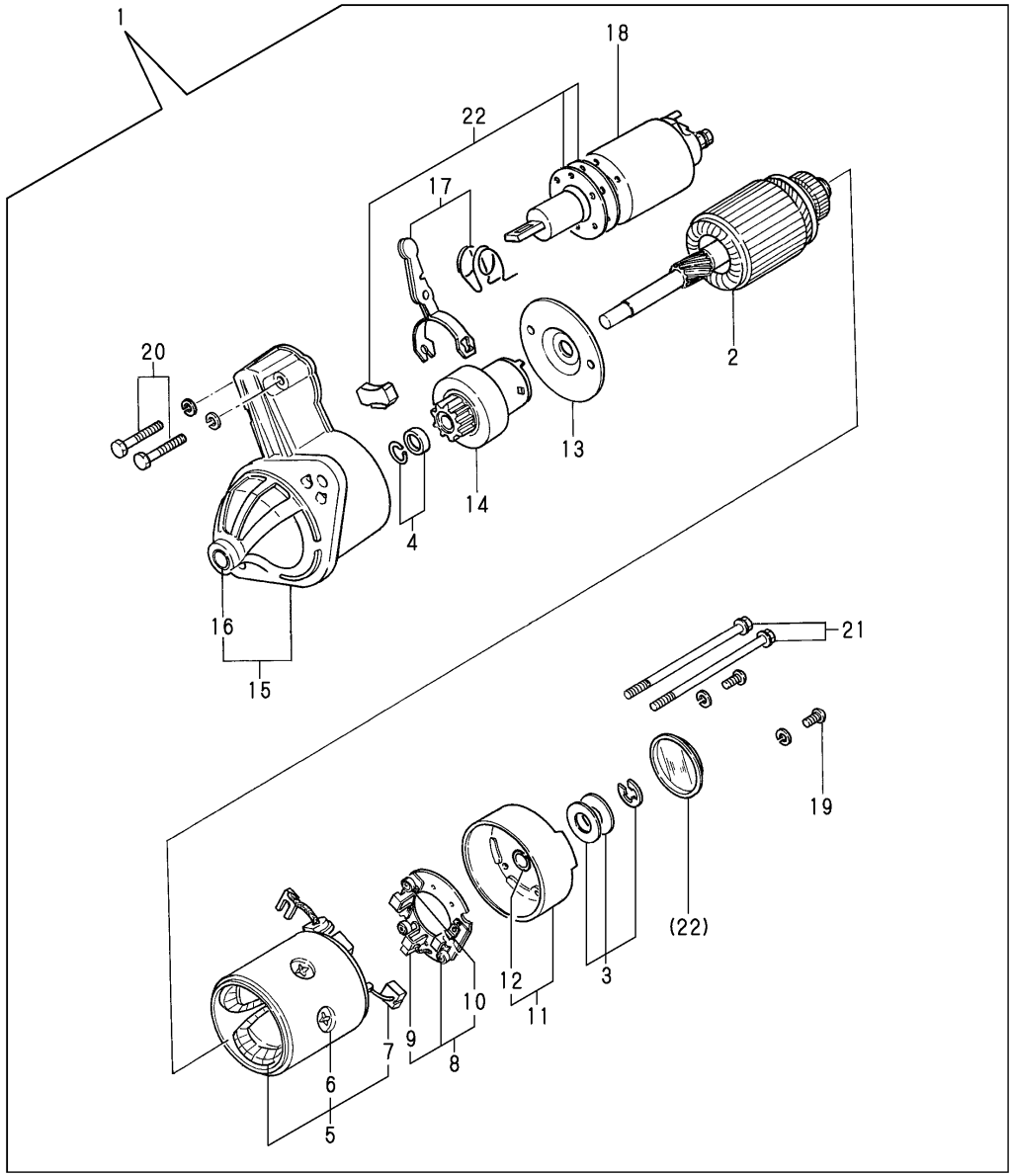

(A)=1GM (B)=2GM(F) (C)=3GM(F) (D)=3GMD (E)=3HM (F)=3HMF

No.	Lev.	Parts No.	Description	Q'ty (A)	(B)	(C)	(D)	(E)	(F)	I	R
1	1	128170-77010	STARTER, S114-303	1	1	1	1				
2	2	X211451005	ARMATURE	1	1	1	1				
3	2	X21148110	WASHER SET, THRUST	1	1	1	1				
4	2	X21147155	STOPPER SET, PINION	1	1	1	1				
5	2	X211462101	COIL ASSY, FIELD	1	1	1	1				
6	3	X21143215	SCREW, CORE	4	4	4	4				
7	3	X21145312	BRUSH, +	2	2	2	2				
8	2	X211433101	HOLDER	1	1	1	1				
9	3	X21148313	BRUSH (-)	1	1	1	1				
10	3	X21145314	SPRING	3	3	3	3				
11	2	X211413005	COVER ASSY	1	1	1	1				
12	3	X21145352	METAL	1	1	1	1				
13	2	X21144454	PLATE	1	1	1	1				
14	2	X211415006	PINION ASSY	1	1	1	1				
15	2	X211476503	CASE ASSY	1	1	1	1				
16	3	X21144661	METAL, GEAR CASE	1	1	1	1				
17	2	X21149652	LEVER SET, SHIFT	1	1	1	1				
18	2	X211447009	SWITCH	1	1	1	1				
19	2	26031-040122	SCREW M4X12	2	2	2	2				
20	2	26013-060322	BOLT, M6X 32	2	2	2	2				
21	2	X21148852	BOLT, THROUGH	2	2	2	2				
22	2	X21146963	COVER	1	1	1	1				

N:Old $\xleftarrow[\text{No}]{\text{Yes}}$ New, Q:Old $\xleftarrow[\text{Yes}]{\text{No}}$ New, R:Old $\xleftarrow[\text{Yes}]{\text{Yes}}$ New, S:Old $\xleftarrow[\text{No}]{\text{No}}$ New, W:Add, Z:Discontinued, F:Interchangeable by set, K:Q'ty Change

Copyright (C) YANMAR CO., LTD. All RightsReserved.

Fig.46. STARTING MOTOR COMPONENT PART(12V/1.8KW)

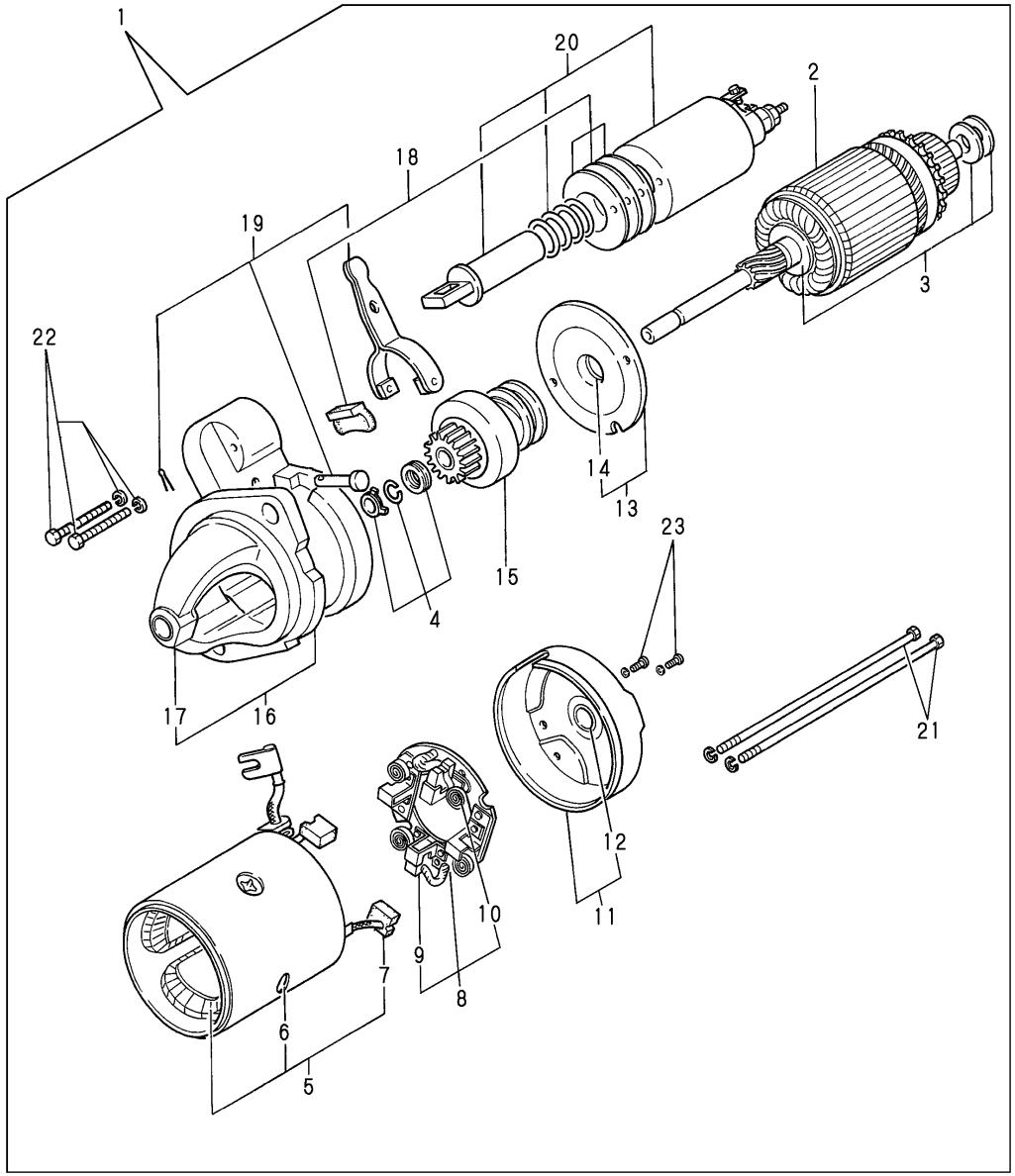

(A)=1GM (B)=2GM(F) (C)=3GM(F) (D)=3GMD (E)=3HM (F)=3HMF

No.	Lev.	Parts No.	Description	Q'ty (A)	(B)	(C)	(D)	(E)	(F)	I	R
1	1	121370-77020	STARTER, S12-79					1	1		
2	2	X21207100	ARMATURE ASSY					1	1		
3	2	X21201115	WASHER SET, THRUST					1	1		
4	2	X21201110	STOPPER SET					1	1		
5	2	X21204259	COIL ASSY					1	1		
6	3	X21142215	SCREW					4	4		
7	3	X21209311	BRUSH (+)					2	2		
8	2	X21205310	HOLDER ASSY, BRUSH					1	1		
9	3	X21207312	BRUSH					2	2		
10	3	X21201313	SPRING, BRUSH					4	4		
11	2	X22501300	COVER ASSY,REAR					1	1		
12	3	X21204302	METAL, COVER BEARING					1	1		
13	2	X21205400	BEARING ASSY					1	1		
14	3	X21204401	METAL, CENTER BERG.					1	1		
15	2	X212045001	PINION ASSY					1	1		
16	2	X21205650	CASE ASSY,GEAR					1	1		
17	3	X21202601	METAL, GEAR CASE					1	1		
18	2	X21202602	COVER SET					1	1		
19	2	X21201605	LEVER SET					1	1		
20	2	X212077002	SWITCH ASSY, MAGNET.					1	1		
21	2	X21204810	BOLT, THROUGH					2	2		
22	2	X21145866	BOLT					2	2		
23	2	26557-040122	SCREW, M4X12					2	2		
23-1	2	26013-040122	SCREW					2	2	N	
				(E=EXXX)				(F=EXXX)			

N:Old ◄Yes/No► New, Q:Old ◄No/Yes► New, R:Old ◄Yes/Yes► New, S:Old ◄No/No► New, W:Add, Z:Discontinued, F:Interchangeable by set, K:Q'ty Change

Copyright (C) YANMAR CO., LTD. All RightsReserved.

Fig.47. GENERATOR(AC)

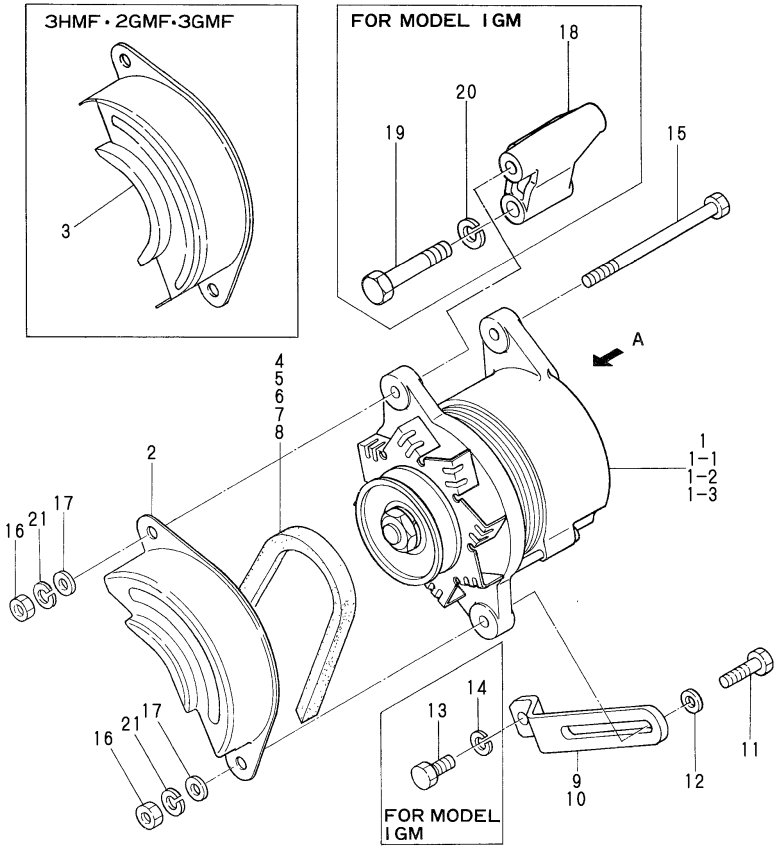

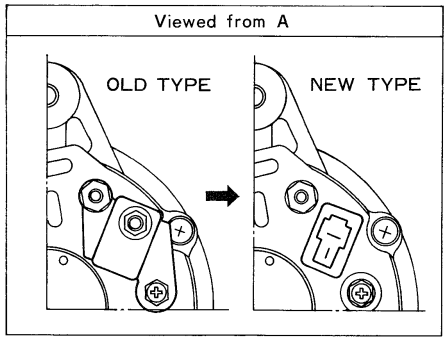

Remarks
(1)INTERCHANGEABLE BY SIMULTANEOUS REPLACEMENT WITH FIG.NO.52 REF.NO.3-1.
(2)2GMF,3GMF

(A)=1GM (B)=2GM(F) (C)=3GM(F) (D)=3GMD (E)=3HM (F)=3HMF

No.	Lev.	Parts No.	Description	Q'ty (A)	(B)	(C)	(D)	(E)	(F)	I	R
1	1	121370-77200	GENERATOR, LR135-31		1	1		1			
1-1	1	128170-77200	GENERATOR, LR135-74	1	1	1	1	1	1	R	
		(B=EXXX)	(C=EXXX)		(E=EXXX)						
1-2	1	128170-77201	GENERATOR, LR135-74B	1	1	1	1	1	1	N	
	(A=E/#03427)	(B=E/#04805)	(C=E/#02710) (D=*1982.01)		(E=*1982.01)			(F=*1982.01)			
1-3	1	128270-77200	GENERATOR, LR135-105	1	1	1	1	1	1	F	1
	(A=EXXX)	(B=EXXX)	(C=EXXX) (D=EXXX)		(E=EXXX)			(F=EXXX)			
2	1	121250-77210	COVER, GENERATOR	1	1	1	1	1			
3	1	128695-77210	COVER, GENERATOR		1	1			1		
4	1	128170-77350	V-BELT, HM29	1							
5	1	25132-003000	V-BELT, A30		1	1	1				
6	1	128670-77350	V-BELT, A31					1			
7	1	128695-44780	V-BELT, A39.5						1		
8	1	121150-42290	V-BELT		1	1					2
9	1	124465-77330	ADJUSTER	1							
10	1	124790-77330	ADJUSTER, BELT		1	1	1	1	1		
11	1	26116-080302	BOLT, M8X 30 PLATED	1	1	1	1	1	1		
11-1	1	26116-080322	BOLT, M8X 32 PLATED					1		R	
				(E=EXXX)							
12	1	22137-080000	WASHER, 8	1	1	1	1	1	1		
13	1	26116-080202	BOLT, M8X 20 PLATED	1							
14	1	22217-080000	WASHER, SPRING 8	1							
15	1	26116-081202	BOLT, M8X120 PLATED	1	1	1	1	1	1		
16	1	26716-080002	NUT, M8	2	2	2	2	2	2		
17	1	22137-080000	WASHER, 8	2	2	2		2			
17-1	1	22117-080000	WASHER, 8	2	2	2	2	2	2	R	
	(A=EXXX)	(B=EXXX)	(C=EXXX)		(E=EXXX)						
18	1	128170-77250	BRACKET, GENERATOR	1							
19	1	26116-100602	BOLT, M10X 60 PLATED	2							
20	1	22217-100000	WASHER, SPRING 10	2							
21	1	22217-080000	WASHER, SPRING 8					2			

N:Old $\xleftarrow[\text{No}]{\text{Yes}}$ New, Q:Old $\xleftarrow[\text{Yes}]{\text{No}}$ New, R:Old $\xleftarrow[\text{Yes}]{\text{Yes}}$ New, S:Old $\xleftarrow[\text{No}]{\text{No}}$ New, W:Add, Z:Discontinued, F:Interchangeable by set, K:Q'ty Change

Copyright (C) YANMAR CO., LTD. All RightsReserved.

Fig.48. GENERATOR COMPONENT PART(121370-77200)

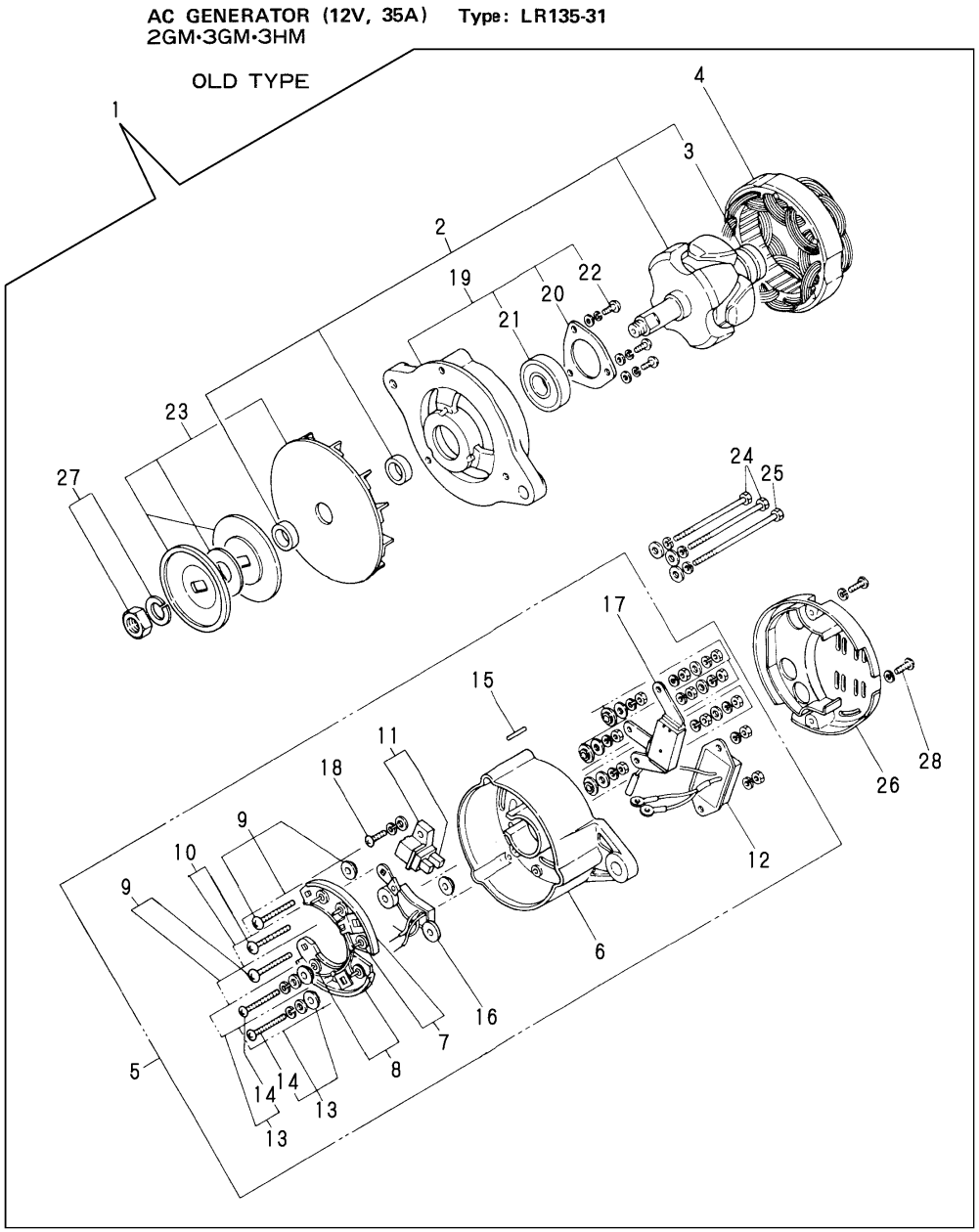

(A)=1GM
(B)=2GM(F)
(C)=3GM(F)
(D)=3GMD
(E)=3HM
(F)=3HMF

No.	Lev.	Parts No.	Description	Q'ty (A)	(B)	(C)	(D)	(E)	(F)	I	R
1	1	121370-77200	GENERATOR, LR135-31		1	1		1			
2	2	XLR135Y110	ROTOR ASSY		1	1		1			
3	3	X6201SD	BEARING		1	1		1			
4	2	XL135Y1200	STATOR ASSY		1	1		1			
5	2	XL135Y1300	COVER ASSY, REAR		1	1		1			
6	3	XL135Y13001	COVER, REAR		1	1		1			
7	3	XL135Y1302	SR HOLDER (+)		1	1		1			
8	3	XL135Y1303	SR HOLDER (-)		1	1		1			
9	3	XL135Y1310	TERMINAL ASSY		2	2		2			
10	3	XL135Y1311	TERMINAL ASSY		1	1		1			
11	4	XL135Y1320	HOLDER ASSY, BRUSH		1	1		1			
12	4	XTR1Z28	IC REGULATOR		1	1		1			
13	4	XL135Y1803	SCREW SET		2	2		2			1
14	4	26557-050362	SCREW M 5X 36		2	2		2			
15	3	XL135Y1810	LOCK, BEARING		1	1		1			
16	3	XMV11305	CONTROL UNIT, FIELD		1	1		1			
17	3	XMV11306	CR ASSY		1	1		1			
18	3	26557-050162	SCREW, M5X16		1	1		1			
19	2	XL135Y1400	COVER ASSY, FRONT		1	1		1			
20	3	XL135Y1401	RETAINER, BEARING		1	1		1			
21	3	X6302BM	BALL BEARING		1	1		1			
22	3	26557-040122	SCREW, M4X12		3	3		3			
23	2	XL135Y1531	PULLEY ASSY		1	1		1			
24	2	XL135Y1801	BOLT, THROUGH		2	2		2			
25	2	XL135Y1802	BOLT, THROUGH		1	1		1			
26	2	XL135Y1820	COVER		1	1		1			
27	2	XB444001A	NUT SET, PULLEY		1	1		1			
28	2	26557-050102	SCREW, M5X10		1	1		1			

Remarks
(1)INC.NO.14

N:Old $\xleftarrow[\text{No}]{\text{Yes}}$ New, Q:Old $\xleftarrow[\text{Yes}]{\text{No}}$ New, R:Old $\xleftarrow[\text{Yes}]{\text{Yes}}$ New, S:Old $\xleftarrow[\text{No}]{\text{No}}$ New, W:Add, Z:Discontinued, F:Interchangeable by set, K:Q'ty Change

Copyright (C) YANMAR CO., LTD. All RightsReserved.

Fig.49. GENERATOR COMPONENT PART(128170-77200)

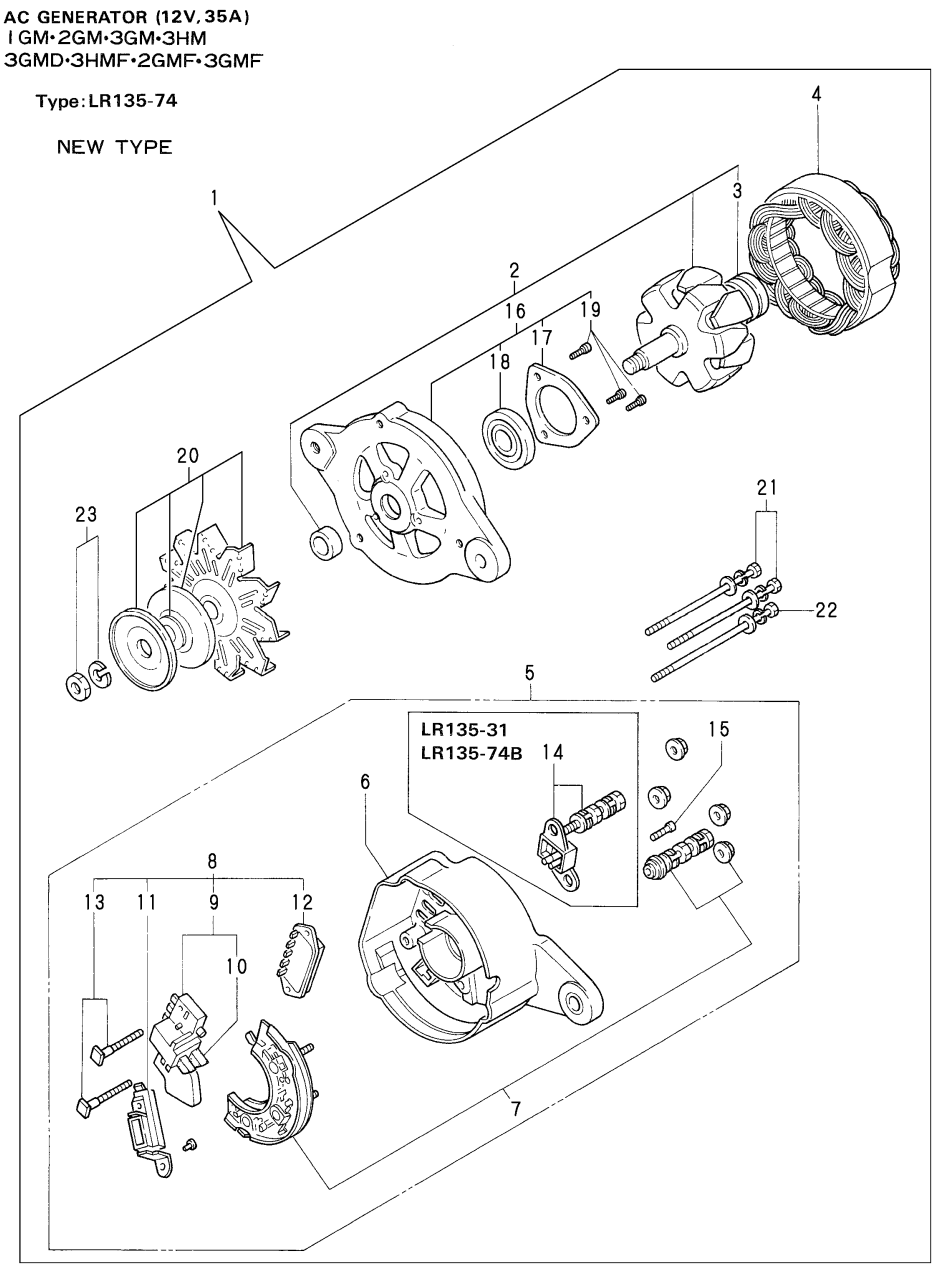

(A)=1GM (B)=2GM(F) (C)=3GM(F) (D)=3GMD (E)=3HM (F)=3HMF

No.	Lev.	Parts No.	Description	Q'ty (A)	(B)	(C)	(D)	(E)	(F)	I	R
1	1	128170-77200	GENERATOR, LR135-74	1	1	1	1	1	1		
2	2	XL13561001	ROTOR ASSY	1	1	1	1	1	1		
3	3	X6201SD	BEARING	1	1	1	1	1	1		
4	2	XL1356200	STATER ASSY	1	1	1	1	1	1		
5	2	XL13523001	COVER ASSY, REAR	1	1	1	1	1	1		
6	3	XL1358301	COVER	1	1	1	1	1	1		
7	3	XL1353320	DIODE ASSY	1	1	1	1	1	1		
8	3	XL13533151	BRUSH W/REGURATOR	1	1	1	1	1	1		
9	4	XL1208326	BRUSH ASSY	1	1	1	1	1	1		1
10	4	XL12013262	BRUSH	2	2	2	2	2	2		
11	4	XL1351318	CONDENSER	1	1	1	1	1	1		
12	4	XTR1Z49	IC REGULATOR	1	1	1	1	1	1		
13	4	XL13513134	BOLT M5	2	2	2	2	2	2		
14	3	XL1202310	BOLT ASSY, TERMINAL	1	1	1	1	1	1		
15	3	26557-050142	SCREW M 5X 14	1	1	1	1	1	1		
16	2	XL1359400	COVER ASSY, FRONT	1	1	1	1	1	1		
17	3	XL13514042	RETAINER	1	1	1	1	1	1		
18	3	X6302BM	BALL BEARING	1	1	1	1	1	1		
19	3	26557-040122	SCREW, M4X12	3	3	3	3	3	3		
20	2	XL13525001	PULLEY ASSY	1	1	1	1	1	1		
21	2	XL1254801	BOLT, THROUGH	2	2	2	2	2	2		
22	2	XL1255801	BOLT, THROUGH	1	1	1	1	1	1		
23	2	XB495469B	NUT ASSY, PULLEY	1	1	1	1	1	1		

Remarks
(1)INC.NO.10

N:Old $\frac{\text{Yes}}{\text{No}}$ New, Q:Old $\frac{\text{No}}{\text{Yes}}$ New, R:Old $\frac{\text{Yes}}{\text{Yes}}$ New, S:Old $\frac{\text{No}}{\text{No}}$ New, W:Add, Z:Discontinued, F:Interchangeable by set, K:Q'ty Change

Copyright (C) YANMAR CO., LTD. All RightsReserved.

Fig.50. GENERATOR COMPONENT PART(128170-77201)

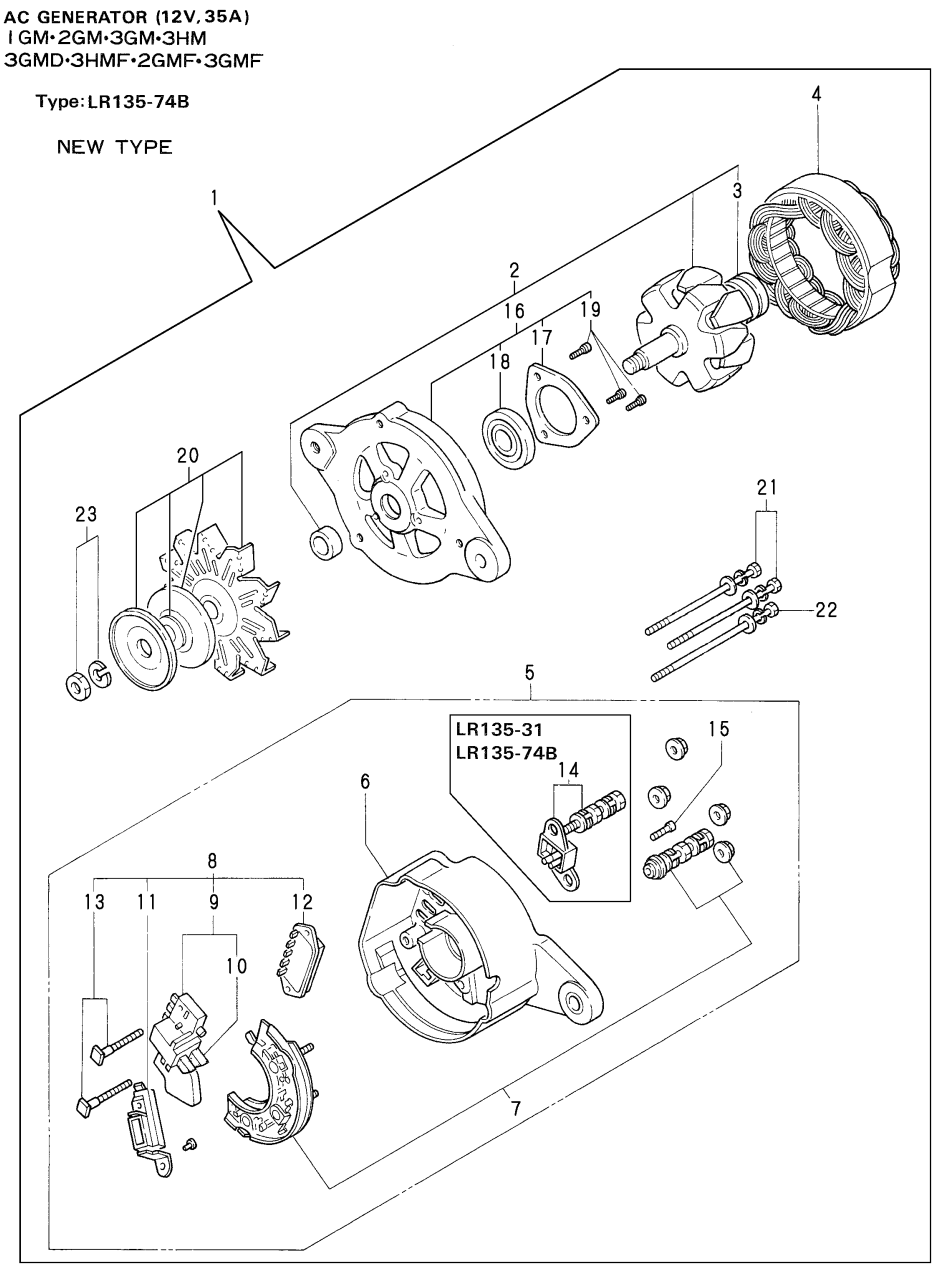

(A)=1GM (B)=2GM(F) (C)=3GM(F) (D)=3GMD (E)=3HM (F)=3HMF

No.	Lev.	Parts No.	Description	Q'ty (A)	(B)	(C)	(D)	(E)	(F)	I	R
1	1	128170-77201	GENERATOR, LR135-74B	1	1	1	1	1	1		
2	2	XL13561001	ROTOR ASSY	1	1	1	1	1	1		
3	3	X6201SD	BEARING	1	1	1	1	1	1		
4	2	XL1356200	STATER ASSY	1	1	1	1	1	1		
5	2	XL13513003	REAR COVER ASSY	1	1	1	1	1	1		
6	3	XL1358301	COVER	1	1	1	1	1	1		
7	3	XL1353320	DIODE ASSY	1	1	1	1	1	1		
8	3	XL13533152	REGULATOR ASSY	1	1	1	1	1	1		
9	4	XL1354326	BRUSH, CARBON	1	1	1	1	1	1		1
10	4	XL12013262	BRUSH	2	2	2	2	2	2		
11	4	XL1351318	CONDENSER	1	1	1	1	1	1		
12	4	XTR1Z69	REGULATOR	1	1	1	1	1	1		
13	4	XL13513134	BOLT M5	2	2	2	2	2	2		
14	3	XL1203310	BOLT	1	1	1	1	1	1		
15	3	26557-050142	SCREW M 5X 14	1	1	1	1	1	1		
16	2	XL1359400	COVER ASSY, FRONT	1	1	1	1	1	1		
17	3	XL13514042	RETAINER	1	1	1	1	1	1		
18	3	X6302BM	BALL BEARING	1	1	1	1	1	1		
19	3	26557-040122	SCREW, M4X12	3	3	3	3	3	3		
20	2	XL13525001	PULLEY ASSY	1	1	1	1	1	1		
21	2	XL1254801	BOLT, THROUGH	2	2	2	2	2	2		
22	2	XL1255801	BOLT, THROUGH	1	1	1	1	1	1		
23	2	XB495469B	NUT ASSY, PULLEY	1	1	1	1	1	1		

Remarks
(1)INC.NO.10

N:Old $\frac{\text{Yes}}{\text{No}}$ New, Q:Old $\frac{\text{No}}{\text{Yes}}$ New, R:Old $\frac{\text{Yes}}{\text{Yes}}$ New, S:Old $\frac{\text{No}}{\text{No}}$ New, W:Add, Z:Discontinued, F:Interchangeable by set, K:Q'ty Change

Copyright (C) YANMAR CO., LTD. All RightsReserved.

Fig.51. GENERATOR COMPONENT PART(128270-77200)

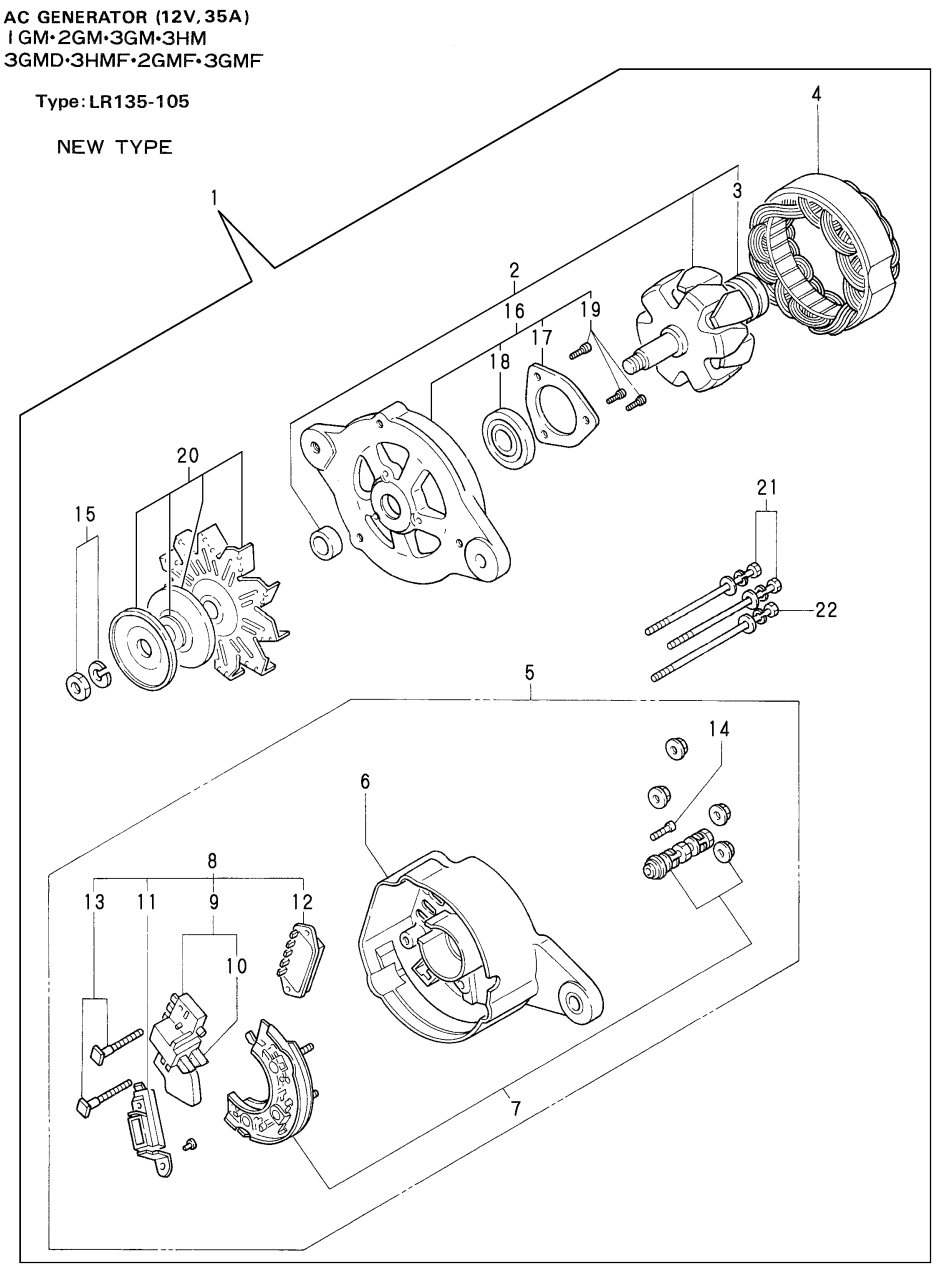

(A)=1GM (B)=2GM(F) (C)=3GM(F) (D)=3GMD (E)=3HM (F)=3HMF

No.	Lev.	Parts No.	Description	Q'ty (A)	(B)	(C)	(D)	(E)	(F)	I	R
1	1	128270-77200	GENERATOR, LR135-105	1	1	1	1	1	1		
2	2	XL13561001	ROTOR ASSY	1	1	1	1	1	1		
3	3	X6201SD	BEARING	1	1	1	1	1	1		
4	2	XL13542001	STATER ASSY	1	1	1	1	1	1		
5	2	XL13523003	COVER ASSY, REAR	1	1	1	1	1	1		
6	3	XL1358301	COVER	1	1	1	1	1	1		
7	3	XL1353320	DIODE ASSY	1	1	1	1	1	1		
8	3	XL13513152	BRUSH REGULATOR(W/CO	1	1	1	1	1	1		
9	4	XL1354326	BRUSH, CARBON	1	1	1	1	1	1		1
10	4	XL12013262	BRUSH	2	2	2	2	2	2		
11	4	XL1352318	CONDENSER ASSY	1	1	1	1	1	1		
12	4	XTR1Z63	REGULATOR	1	1	1	1	1	1		
13	4	XL13513134	BOLT M5	2	2	2	2	2	2		
14	3	26557-050142	SCREW M 5X 14	1	1	1	1	1	1		
15	2	XB495469B	NUT ASSY, PULLEY	1	1	1	1	1	1		
16	2	XL1359400	COVER ASSY, FRONT	1	1	1	1	1	1		
17	3	XL13514042	RETAINER	1	1	1	1	1	1		
18	3	X6302BM	BALL BEARING	1	1	1	1	1	1		
19	3	26557-040122	SCREW, M4X12	3	3	3	3	3	3		
20	2	XL13525001	PULLEY ASSY	1	1	1	1	1	1		
21	2	XL1254801	BOLT, THROUGH	2	2	2	2	2	2		
22	2	XL1255801	BOLT, THROUGH	1	1	1	1	1	1		

Remarks
(1)INC.NO.10

N:Old $\frac{\text{Yes}}{\text{No}}$ New, Q:Old $\frac{\text{No}}{\text{Yes}}$ New, R:Old $\frac{\text{Yes}}{\text{Yes}}$ New, S:Old $\frac{\text{No}}{\text{No}}$ New, W:Add, Z:Discontinued, F:Interchangeable by set, K:Q'ty Change

Copyright (C) YANMAR CO., LTD. All RightsReserved.

Fig.52. WIRE HARNESS

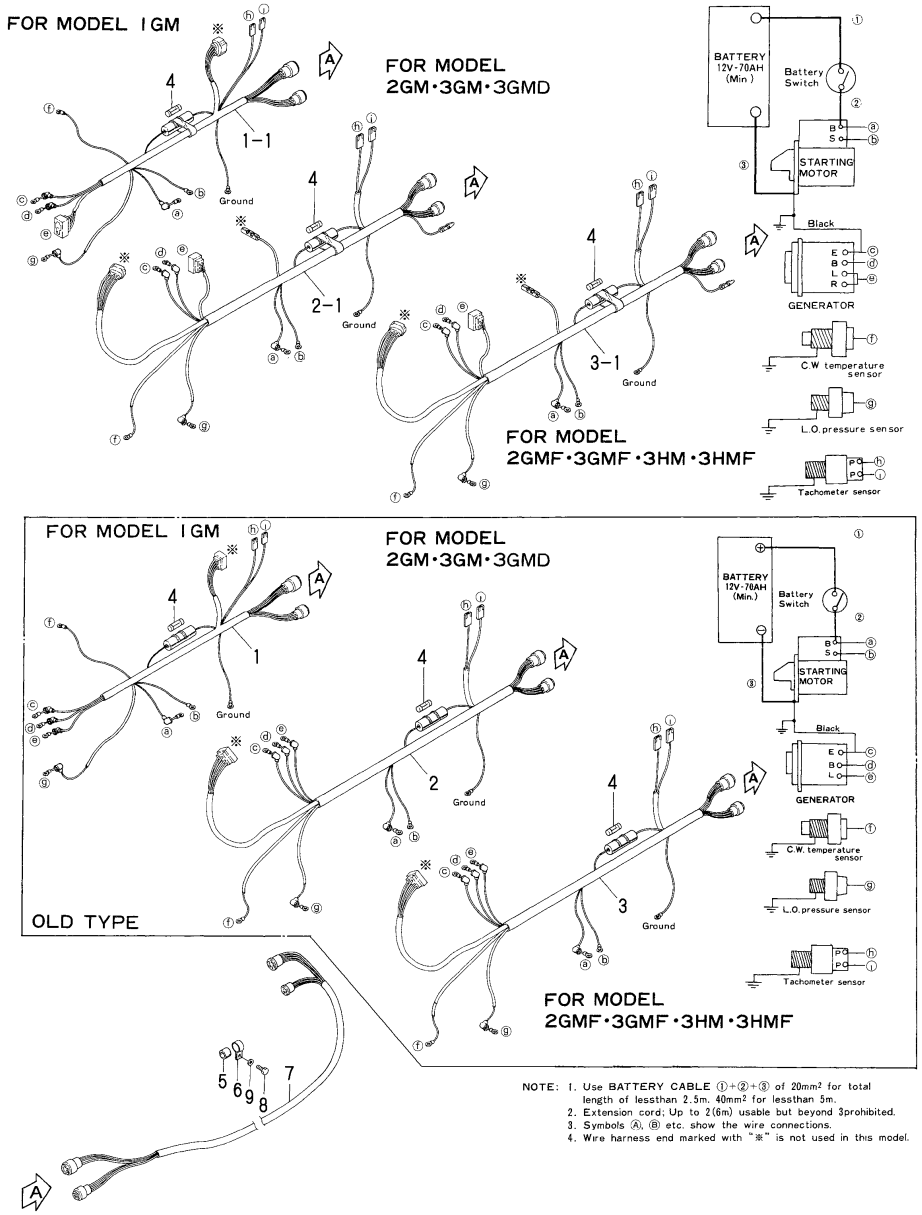

Remarks
(1)INTERCHANGEABLE BY SIMULTANEOUS REPLACEMENT WITH FIG.NO.47 REF.NO.1-3.

(A)=1GM (B)=2GM(F) (C)=3GM(F) (D)=3GMD (E)=3HM (F)=3HMF

No.	Lev.	Parts No.	Description	Q'ty (A)	(B)	(C)	(D)	(E)	(F)	I	R
1	1	128170-77920	HARNESS, WIRE	1							
1-1	1	128170-77921	HARNESS, WIRE	1						F	1
(A=E/#03428)											
2	1	128270-77920	HARNESS, WIRE		1	1	1				
2-1	1	128270-77921	HARNESS, WIRE		1	1	1			F	1
		(B=E/#04806)	(C=E/#02710)								
3	1	128670-77920	HARNESS, WIRE		1	1		1	1		
3-1	1	128270-77921	HARNESS, WIRE		1	1		1	1	F	1
		(B=*1982.01)	(C=*1982.01)	(E=*1982.01)				(F=*1982.01)			
4	1	46150-003680	FUSE 30A	1	1	1	1	1	1		
5	1	124770-77940	PROTECTOR	1	1	1	1	1	1		
6	1	124070-77950	CLAMP	1	1	1	1	1	1		
7	1	128170-77500	CORD, EXTENSION 3000	1	1	1	1	1	1		
8	1	26116-080162	BOLT, M8X 16 PLATED	1	1	1	1	1	1		
9	1	22117-080000	WASHER, 8	1	1	1	1	1	1		

N:Old $\xleftarrow[\text{No}]{\text{Yes}}$ New, Q:Old $\xleftarrow[\text{Yes}]{\text{No}}$ New, R:Old $\xleftarrow[\text{Yes}]{\text{Yes}}$ New, S:Old $\xleftarrow[\text{No}]{\text{No}}$ New, W:Add, Z:Discontinued, F:Interchangeable by set, K:Q'ty Change

Copyright (C) YANMAR CO., LTD. All RightsReserved.

Fig.53. CLUTCH

P/C NEWS No. :Y00R0902-1
PUBLISHED :2005/7

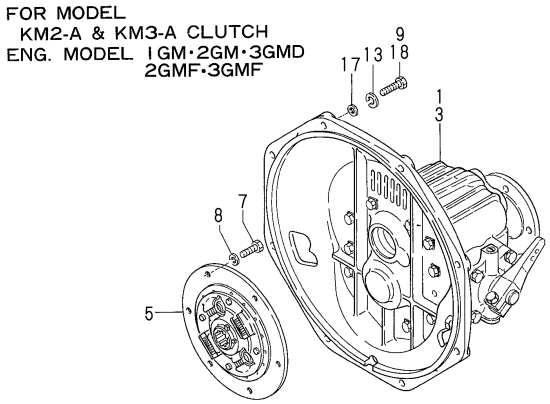

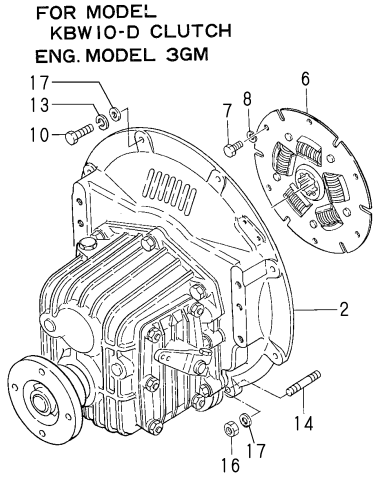

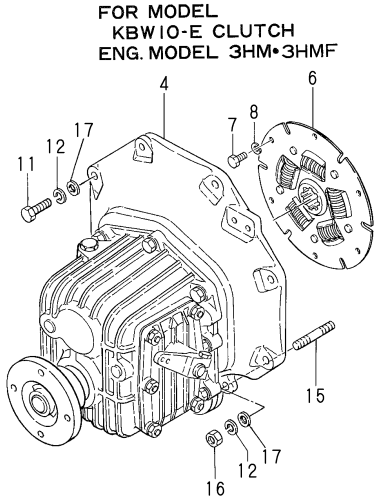

Remarks
(1)KM2A,KM3A
(2)KBW10D,KBW10E
(3)3GMF,3GMD

(A)=1GM (B)=2GM(F) (C)=3GM(F) (D)=3GMD (E)=3HM (F)=3HMF

No.	Lev.	Parts No.	Description	Q'ty (A)	(B)	(C)	(D)	(E)	(F)	I	R
1	1	128170-81030	CLUTCH ASSY, 2.21	1	1						
1A	1	128170-81010	CLUTCH ASSY, I=2.62	1	1						
1B	1	128170-81020	CLUTCH ASSY, I=3.22	1	1						
2	1	128370-81010	CLUTCH ASSY, 2.14			1					
2A	1	128370-81030	CLUTCH ASSY, I=2.63			1					
2B	1	128370-81020	CLUTCH ASSY, I=2.83			1					
3	1	128371-81010	CLUTCH ASSY, 2.36			1	1				
3A	1	128371-81020	CLUTCH ASSY, I=2.61			1	1				
3B	1	128371-81030	CLUTCH ASSY, I=3.20			1	1				
4	1	128670-81010	CLUTCH ASSY, 2.14					1	1		
4A	1	128670-81020	CLUTCH ASSY, I=2.83					1	1		
5	1	124072-81050	DISK, DAMPER	1	1						
5-1	1	128371-81050	DISK, DAMPER D170	1	1	1	1			R	
	(A=EXXX)	(B=EXXX)									
5-2	1	177070-03501	DISK, DAMPER D170	1	1	1	1			N	1
	(A=*1991.01)	(B=*1991.01)	(C=*1991.01) (D=*1991.01)								
6	1	124772-81050	DISK, DAMPER D190			1		1	1		
6-1	1	177099-03500	DISK, DAMPER			1		1	1	N	2
			(C=*1991.01)	(E=*1991.01)				(F=*1991.01)			
7	1	26116-080142	BOLT 8X14	6	6	6	6	6	6		
8	1	22217-080000	WASHER, SPRING 8	6	6	6	6	6	6		
9	1	26116-080252	BOLT, M8X 25 PLATED	8	8						
10	1	26116-080302	BOLT, M8X 30 PLATED			6					
11	1	26116-080282	BOLT, M8X 28 PLATED					6	6		
12	1	22217-080000	WASHER, SPRING 8					8	8		
13	1	22217-080000	WASHER, SPRING 8	8	8	8				Z	
	(A=EXXX)	(B=EXXX)	(C=EXXX)								
14	1	26226-080182	STUD, M8X 18			2					
15	1	26226-080222	STUD, M8X 22					2	2		
16	1	26716-080002	NUT, M8			2		2	2		
17	1	22117-080000	WASHER, 8	8	8	8	8	8	8	W	
	(A=EXXX)	(B=EXXX)	(C=EXXX) (D=EXXX)	(E=EXXX)				(F=EXXX)			
18	1	26116-080302	BOLT, M8X 30 PLATED			8	8				3

N:Old $\overset{\text{Yes}}{\underset{\text{No}}{\leftrightarrows}}$ New, Q:Old $\overset{\text{No}}{\underset{\text{Yes}}{\leftrightarrows}}$ New, R:Old $\overset{\text{Yes}}{\underset{\text{Yes}}{\leftrightarrows}}$ New, S:Old $\overset{\text{No}}{\underset{\text{No}}{\leftrightarrows}}$ New, W:Add, Z:Discontinued, F:Interchangeable by set, K:Q'ty Change

Copyright (C) YANMAR CO., LTD. All RightsReserved.

Fig.54. CLUTCH REMOTE CONTROL

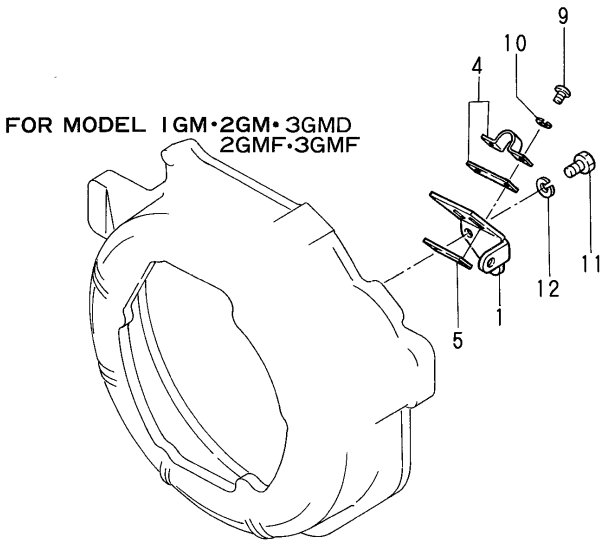

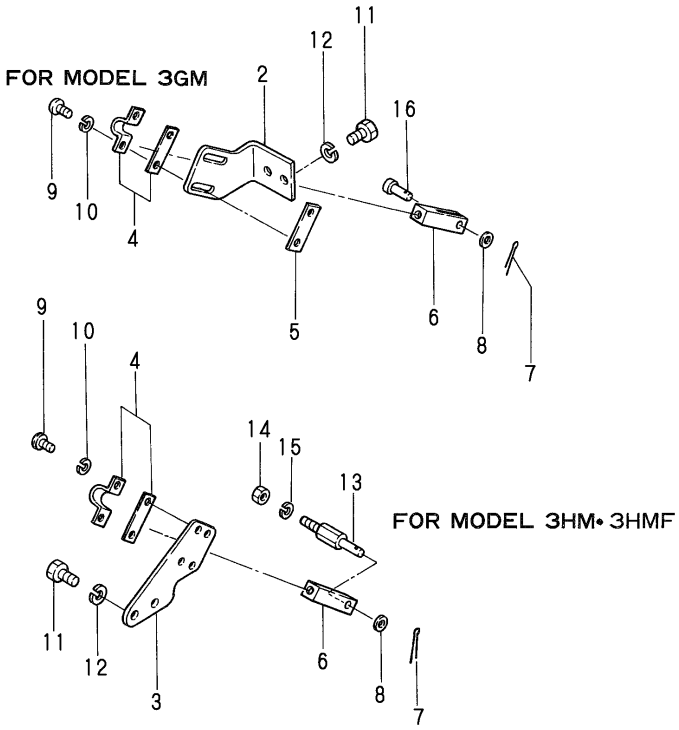

(A)=1GM (B)=2GM(F) (C)=3GM(F) (D)=3GMD (E)=3HM (F)=3HMF

No.	Lev.	Parts No.	Description	Q'ty (A)	(B)	(C)	(D)	(E)	(F)	I	R
1	1	128170-86300	BRACKET, CABLE	1	1	1	1				
2	1	128370-86300	BRACKET, CABLE			1					
3	1	128670-86300	BRACKET, CABLE					1	1		
4	1	41710-000410	CLAMP	1	1	1	1	1	1		
5	1	121574-86320	RETAINER	1	1	1	1				
6	1	128370-86280	CLEVIS, 12SQ-48L			1		1	1		
7	1	22414-160100	PIN, COTTER 1.6X10			1		1	1		
8	1	22113-060000	WASHER, 6			1		1	1		
9	1	26557-050122	SCREW, M5X12	2	2	2	2	2	2		
10	1	22217-050000	WASHER, SPRING 5	2	2	2	2	2	2		
11	1	26116-060142	BOLT, M6X 14 PLATED	2	2	2	2	2	2		
12	1	22217-060000	WASHER, SPRING 6	2	2	2	2	2	2		
13	1	128670-86250	JOINT					1	1		
14	1	26716-060002	NUT, M6					1	1		
15	1	22217-060000	WASHER, SPRING 6					1	1		
16	1	22487-060160	PIN, H 6X 16			1					

N:Old $\overset{\text{Yes}}{\underset{\text{No}}{\leftrightarrow}}$ New, Q:Old $\overset{\text{No}}{\underset{\text{Yes}}{\leftrightarrow}}$ New, R:Old $\overset{\text{Yes}}{\underset{\text{Yes}}{\leftrightarrow}}$ New, S:Old $\overset{\text{No}}{\underset{\text{No}}{\leftrightarrow}}$ New, W:Add, Z:Discontinued, F:Interchangeable by set, K:Q'ty Change

Copyright (C) YANMAR CO., LTD. All RightsReserved.

Fig.55. TOOL

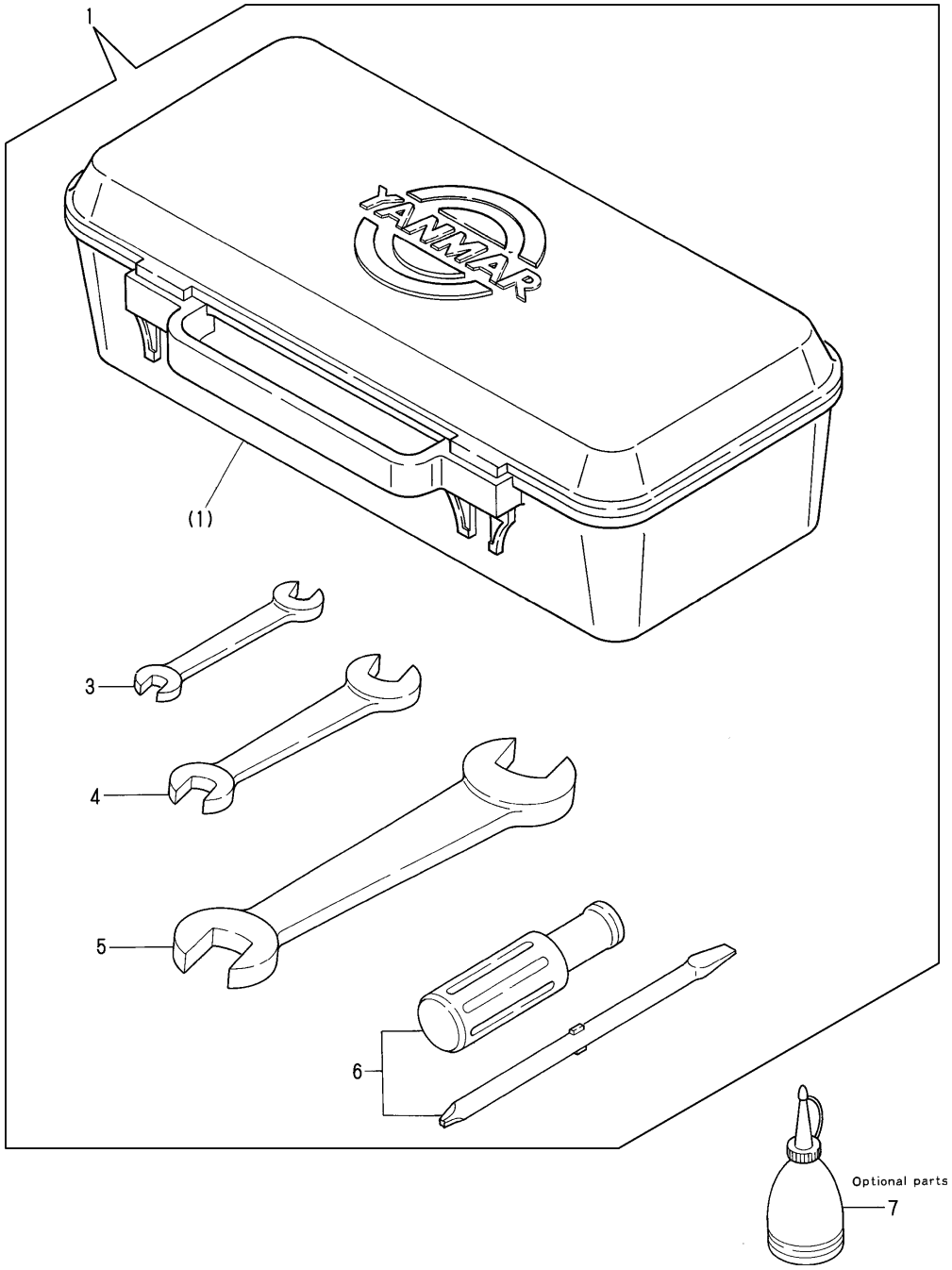

(A)=1GM (B)=2GM(F) (C)=3GM(F) (D)=3GMD (E)=3HM (F)=3HMF

No.	Lev.	Parts No.	Description	Q'ty (A)	(B)	(C)	(D)	(E)	(F)	I	R
1	1	704507-92100	BOX ASSY, TOOL	1	1	1	1	1	1		
3	2	28110-100130	SPANNER, 10X13	1	1	1	1	1	1		
4	2	28110-170190	SPANNER, 17X19	1	1	1	1	1	1		
5	2	28110-220240	SPANNER, 22X24	1	1	1	1	1	1		
6	2	104200-92350	DRIVER, SCREW	1	1	1	1	1	1		
7	1	28210-000150	OILER	1	1	1	1	1	1		

N:Old $\xleftarrow[\text{No}]{\text{Yes}}$ New, Q:Old $\xleftarrow[\text{Yes}]{\text{No}}$ New, R:Old $\xleftarrow[\text{Yes}]{\text{Yes}}$ New, S:Old $\xleftarrow[\text{No}]{\text{No}}$ New, W:Add, Z:Discontinued, F:Interchangeable by set, K:Q'ty Change

Copyright (C) YANMAR CO., LTD. All RightsReserved.

Fig.56. FLEXIBLE MOUNTING(OPTIONAL)

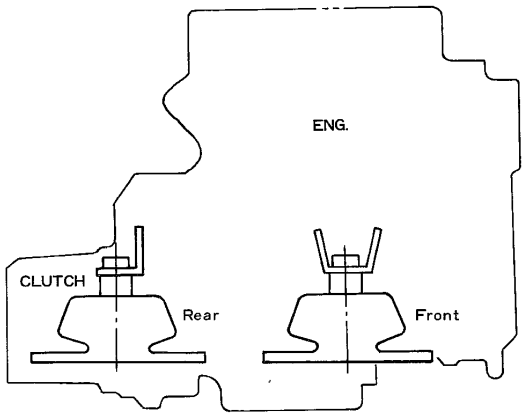

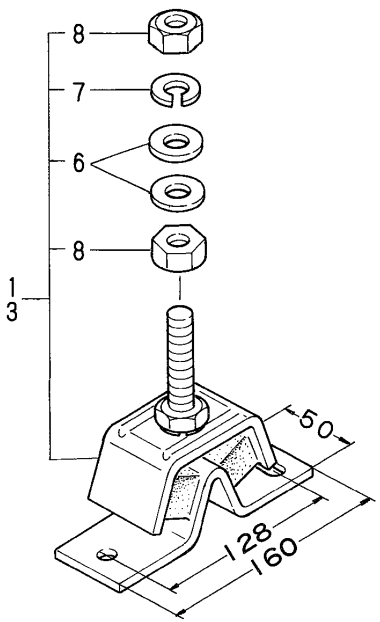

FOR MODEL 1GM

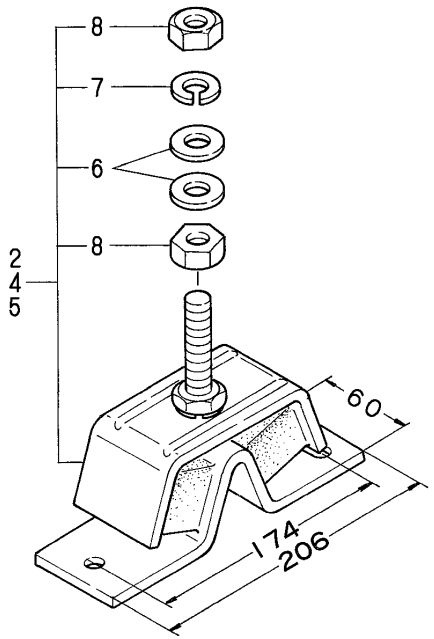

FOR MODEL 2GM•3GM•3GMD•3HM•3HMF
2GMF•3GMF

(A)=1GM (B)=2GM(F) (C)=3GM(F) (D)=3GMD (E)=3HM (F)=3HMF

No.	Lev.	Parts No.	Description	Q'ty (A)	(B)	(C)	(D)	(E)	(F)	I	R
1	1	128170-08350	MOUNT, FLEXIBLE 70	2							
2	1	124772-08340	MOUNT, FLEXIBLE		2	2	2	2	2		
3	1	128170-08340	MOUNT, FLEXIBLE D50	2							
4	1	128270-08340	MOUNT, FLEXIBLE 75		2	2	2				
5	1	124772-08340	MOUNT, FLEXIBLE					2	2		
6	2	22137-140000	WASHER, 14	8	8	8	8	8	8		
7	2	22217-140000	WASHER, SPRING 14	4	4	4	4	4	4		
8	2	26736-140002	NUT, M14	8	8	8	8	8	8		

N:Old ◄Yes/No► New, Q:Old ◄No/Yes► New, R:Old ◄Yes/Yes► New, S:Old ◄No/No► New, W:Add, Z:Discontinued, F:Interchangeable by set, K:Q'ty Change

Copyright (C) YANMAR CO., LTD. All RightsReserved.

Fig.57. LUB. OIL WASTE,BILGE PUMP & KINGSTON COCK(OPTIONAL)

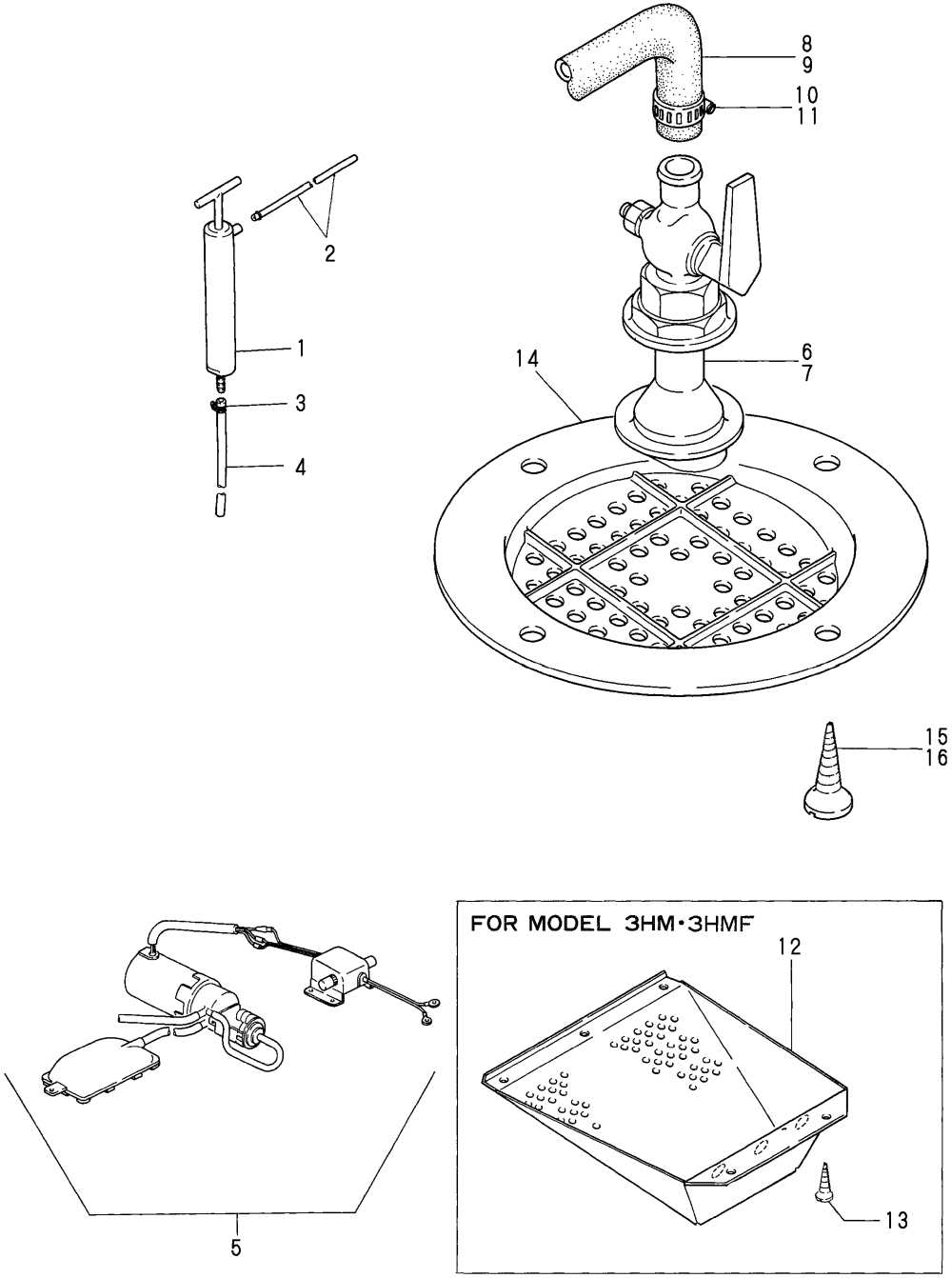

(A)=1GM (B)=2GM(F) (C)=3GM(F) (D)=3GMD (E)=3HM (F)=3HMF

No.	Lev.	Parts No.	Description	Q'ty (A)	(B)	(C)	(D)	(E)	(F)	I	R
1	1	104264-39700	PUMP ASSY, WASTE	1	1	1	1	1	1		
2	1	104264-39710	PIPE	1	1	1	1	1	1		
3	1	23010-012000	CLAMP, 12	1	1	1	1	1	1		
4	1	23061-081000	PIPE, 8X1000	1	1	1	1	1	1		
5	1	97778-200121	BILGE PUMP 12V	1	1	1	1	1	1		
6	1	43662-010030	COCK ASSY, SEA WATER	1	1	1	1				
7	1	43662-015020	COCK					1	1		
8	1	104211-49080	PIPE, 13/20X2M	1	1	1	1				
9	1	124223-49050	PIPE, WATER					1	1		
10	1	23000-022000	CLAMP, 22	3	3	3	3				
11	1	23000-025000	CLAMP, 25					2	2		
12	1	43600-500011	COVER					1	1	Z	
				(E=EXXX)				(F=EXXX)			
13	1	22714-580250	SCREW, 5.8X25					5	5		
14	1	43666-020951	COVER, STRAINER	1	1	1	1	1	1		
15	1	22724-800380	SCREW, 8.0X38	4	4	4	4				
16	1	22724-800400	SCREW 8X 40					4	4		

N:Old $\overset{\text{Yes}}{\underset{\text{No}}{\leftrightarrows}}$ New, Q:Old $\overset{\text{No}}{\underset{\text{Yes}}{\leftrightarrows}}$ New, R:Old $\overset{\text{Yes}}{\underset{\text{Yes}}{\leftrightarrows}}$ New, S:Old $\overset{\text{No}}{\underset{\text{No}}{\leftrightarrows}}$ New, W:Add, Z:Discontinued, F:Interchangeable by set, K:Q'ty Change

Copyright (C) YANMAR CO., LTD. All RightsReserved.

Fig.58. FUEL OIL TANK & BATTERY SWITCH(OPTIONAL)

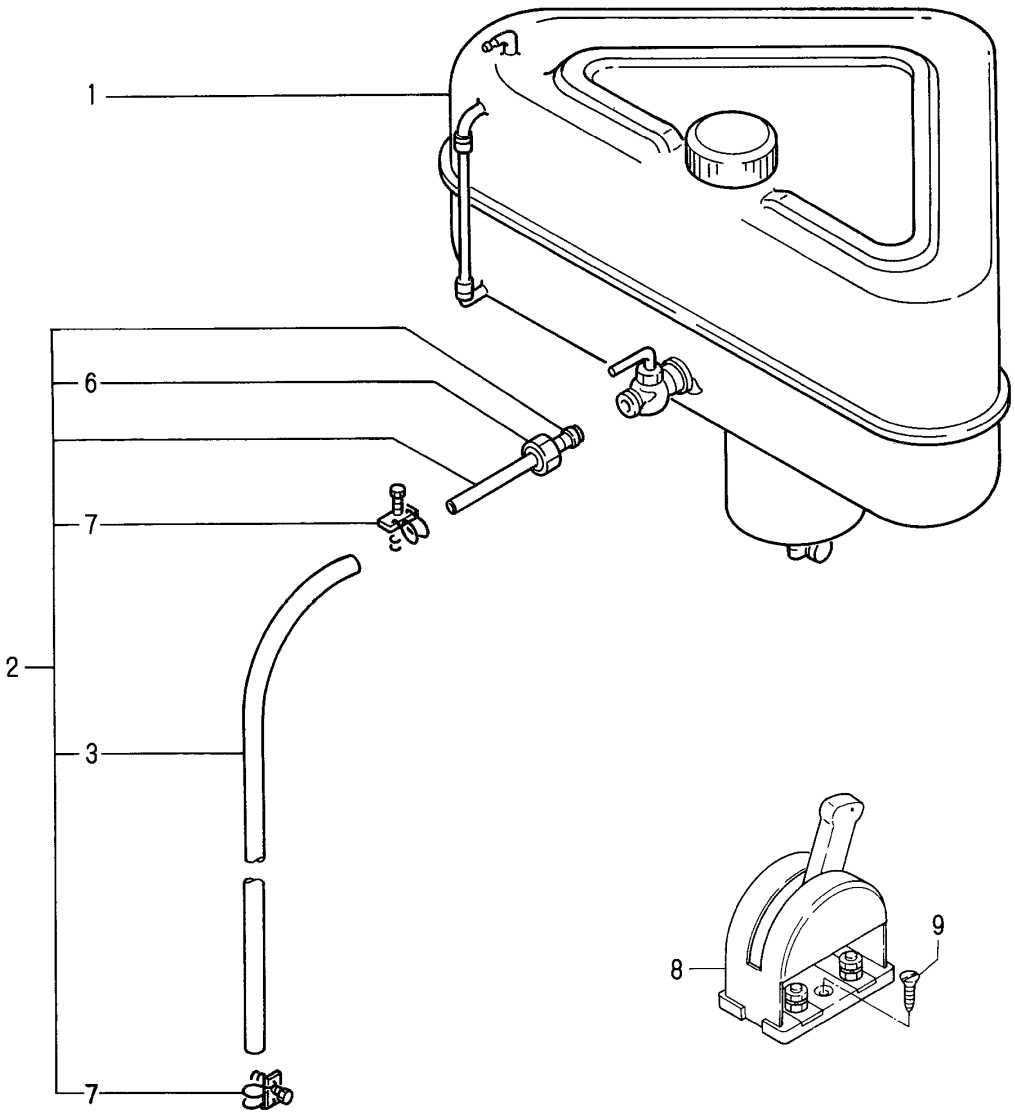

(A)=1GM (B)=2GM(F) (C)=3GM(F) (D)=3GMD (E)=3HM (F)=3HMF

No.	Lev.	Parts No.	Description	Q'ty (A)	(B)	(C)	(D)	(E)	(F)	I	R
1	1	83213-003012	TANK (30L), FUEL	1	1	1	1	1	1		
2	1	124070-59060	PIPE ASSY, FUEL	1	1	1	1	1	1		
3	2	124070-59130	PIPE, FUEL 2M	1	1	1	1	1	1		
6	2	138603-59380	CAP NUT	1	1	1	1	1	1		
7	2	23010-014000	CLAMP, 14	2	2	2	2	2	2		
8	1	123310-77640	SWITCH, BATTERY	1	1	1	1	1	1		
9	1	22724-800380	SCREW, 8.0X38	2	2	2	2	2	2		

N:Old ◄Yes/No► New, Q:Old ◄No/Yes► New, R:Old ◄Yes/Yes► New, S:Old ◄No/No► New, W:Add, Z:Discontinued, F:Interchangeable by set, K:Q'ty Change

Copyright (C) YANMAR CO., LTD. All RightsReserved.

Fig.59. COUPLING(TAPER & SLIT TYPE/OPTIONAL)

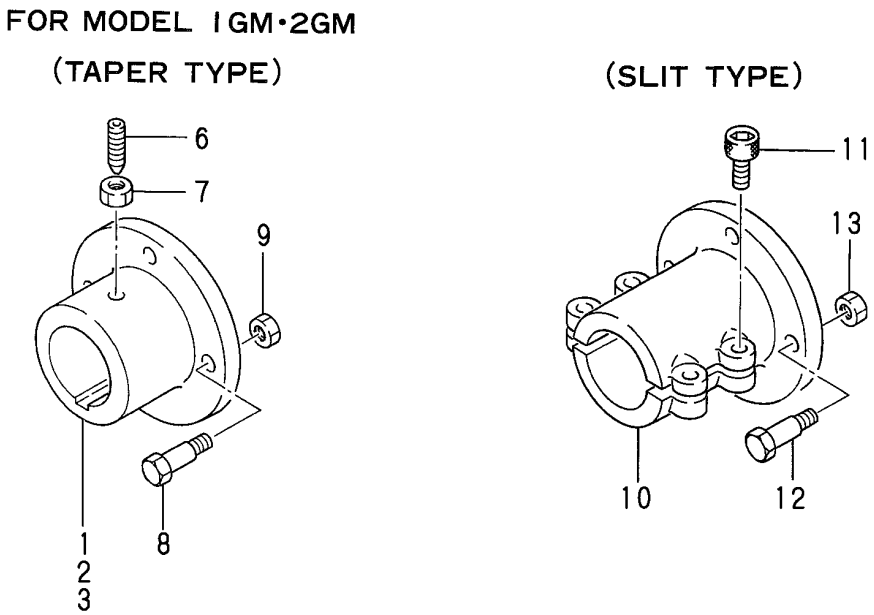

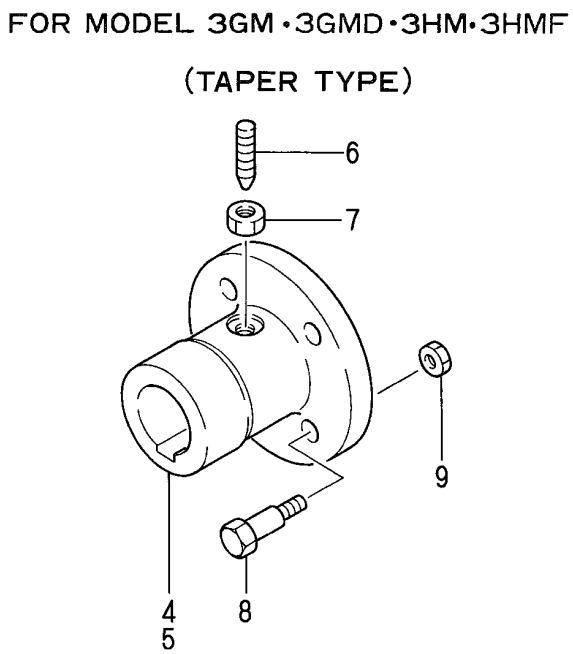

(A)=1GM (B)=2GM(F) (C)=3GM(F) (D)=3GMD (E)=3HM (F)=3HMF

No.	Lev.	Parts No.	Description	Q'ty (A)	(B)	(C)	(D)	(E)	(F)	I	R
1	1	48110-025062	COUPLING	1	1						
2	1	48110-025063	COUPLING, TAPER 25		1						
3	1	48110-522361	COUPLING, TAPER 22	1							
4	1	48110-032502	COUPLING, 30			1		1	1		
5	1	48110-028063	COUPLING, TAPER 28			1	1				
6	1	48110-032411	SCREW	1	1	1	1	1	1		
7	1	26757-080002	NUT, LOCK M8	1	1	1	1	1	1		
8	1	26116-100322	BOLT, M10X 32 PLATED	4	4	4	4	4	4		
9	1	26716-100002	NUT, M10	4	4	4	4	4	4		
10	1	104214-83980	COUPLING	1	1	1	1	1	1		
11	1	26450-080282	BOLT, M8X 28	4	4	4	4	4	4		
12	1	26116-100322	BOLT, M10X 32 PLATED	4	4	4	4	4	4		
13	1	26716-100002	NUT, M10	4	4	4	4	4	4		

N:Old $\overset{\text{Yes}}{\underset{\text{No}}{\leftrightarrow}}$ New, Q:Old $\overset{\text{No}}{\underset{\text{Yes}}{\leftrightarrow}}$ New, R:Old $\overset{\text{Yes}}{\underset{\text{Yes}}{\leftrightarrow}}$ New, S:Old $\overset{\text{No}}{\underset{\text{No}}{\leftrightarrow}}$ New, W:Add, Z:Discontinued, F:Interchangeable by set, K:Q'ty Change

Copyright (C) YANMAR CO., LTD. All RightsReserved.

Fig.60. SINGLE LEVER CONTROL(OPTIONAL)

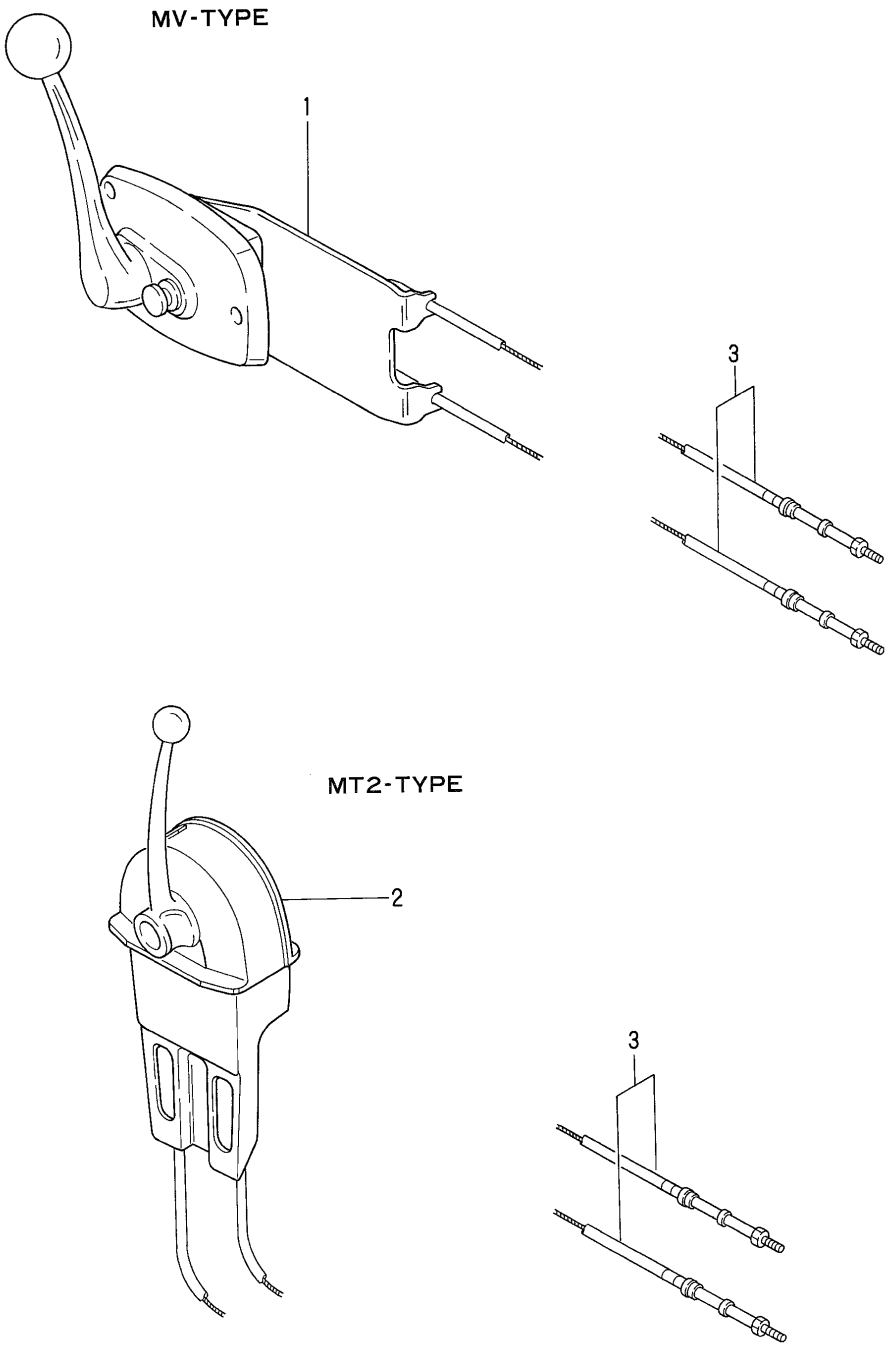

(A)=1GM (B)=2GM(F) (C)=3GM(F) (D)=3GMD (E)=3HM (F)=3HMF

No.	Lev.	Parts No.	Description	Q'ty (A)	(B)	(C)	(D)	(E)	(F)	I	R
1	1	128170-86500	CONTROLLER	1	1	1	1	1	1		
2	1	41730-000680	HEAD, REMOTE-CONTROL	1	1	1	1	1	1		
3	1	41710-000380	CABLE L=4000	2	2	2	2	2	2		

N:Old $\overset{\text{Yes}}{\underset{\text{No}}{\rightleftarrows}}$ New, Q:Old $\overset{\text{No}}{\underset{\text{Yes}}{\rightleftarrows}}$ New, R:Old $\overset{\text{Yes}}{\underset{\text{Yes}}{\rightleftarrows}}$ New, S:Old $\overset{\text{No}}{\underset{\text{No}}{\rightleftarrows}}$ New, W:Add, Z:Discontinued, F:Interchangeable by set, K:Q'ty Change

Copyright (C) YANMAR CO., LTD. All RightsReserved.

Fig.61. INSTRUMENT PANEL(M1/M2-TYPE)(OPTIONAL)

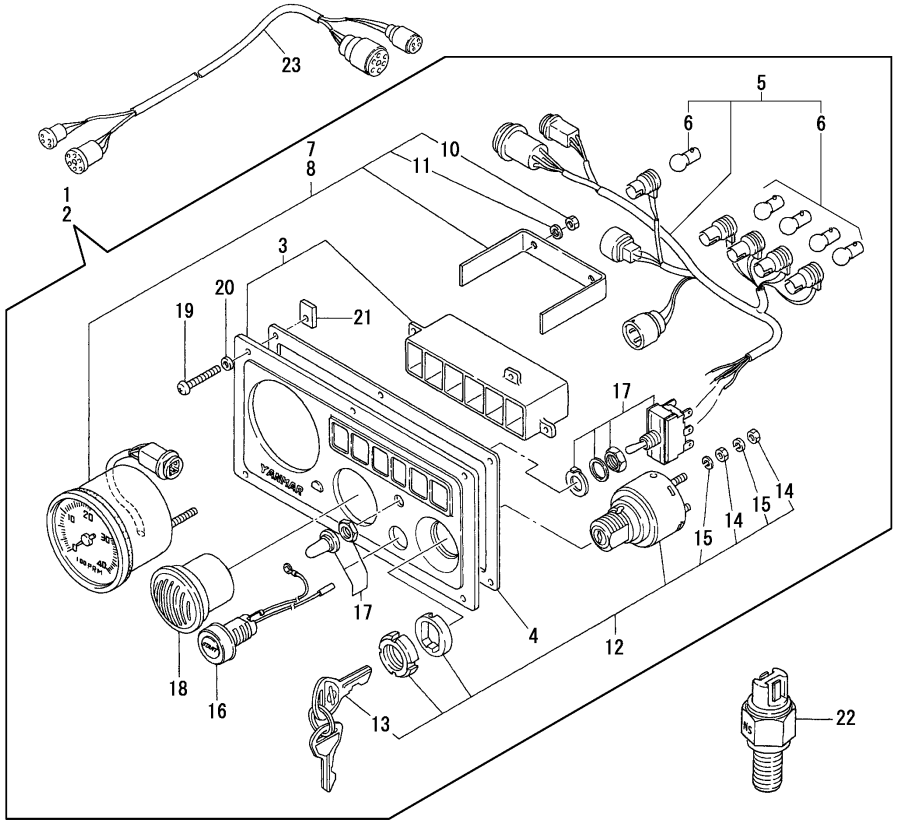

OLD TYPE	Details of WIRE HARNESS (Refer No.5)	NEW TYPE

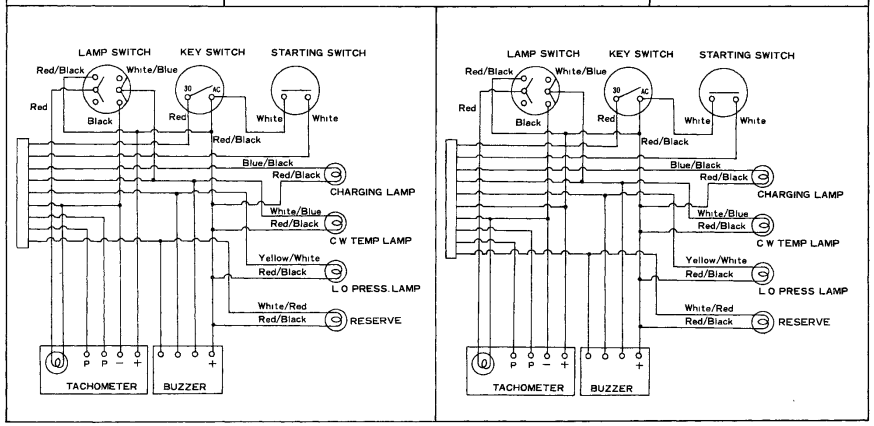

(A)=1GM (B)=2GM(F) (C)=3GM(F) (D)=3GMD (E)=3HM (F)=3HMF

No.	Lev.	Parts No.	Description	Q'ty (A)	(B)	(C)	(D)	(E)	(F)	I	R
1	1	128170-91001	PANEL, INSTRUMENT	1	1	1	1				
2	1	128670-91001	PANEL ASSY					1	1		
3	2	128170-91010	BODY, PANEL	1	1	1	1	1	1		
4	2	128170-91020	GASKET	1	1	1	1	1	1		
5	2	128170-91031	HARNESS, WIRE	1	1	1	1	1	1		
6	3	46150-001110	BULB(12V3W/G11.BA9S)	5	5	5	5	5	5		
7	2	128170-91100	TACHOMETER	1	1	1	1				
8	2	128670-91100	TACHOMETER					1	1		
10	3	26716-050002	NUT, M5	2	2	2	2	2	2		
11	3	22217-050000	WASHER, SPRING 5	2	2	2	2	2	2		
12	2	124070-91250	SWITCH, KEY	1	1	1	1	1	1		
13	3	124070-91290	KEY, SWITCH	1	1	1	1	1	1		
14	3	26716-050002	NUT, M5	4	4	4	4	4	4		
15	3	22217-050000	WASHER, SPRING 5	4	4	4	4	4	4		
16	2	124070-91300	SWITCH	1	1	1	1	1	1		
17	2	128170-91310	SWITCH	1	1	1	1	1	1		
18	2	104271-91351	BUZZER	1	1	1	1	1	1		
19	2	128170-91810	SCREW, M5X35	6	6	6	6	6	6		
20	2	128170-91820	WASHER, 5	6	6	6	6	6	6		
21	2	128170-91830	NUT, M5	6	6	6	6	6	6		
22	1	128170-91160	SENSOR	1	1	1	1	1	1		
23	1	128170-77500	CORD, EXTENSION 3000	1	1	1	1	1	1		

N:Old $\frac{\text{Yes}}{\text{No}}$ New, Q:Old $\frac{\text{No}}{\text{Yes}}$ New, R:Old $\frac{\text{Yes}}{\text{Yes}}$ New, S:Old $\frac{\text{No}}{\text{No}}$ New, W:Add, Z:Discontinued, F:Interchangeable by set, K:Q'ty Change

Copyright (C) YANMAR CO., LTD. All RightsReserved.

Fig.62. INSTRUMENT PANEL(S-TYPE/OPTIONAL)

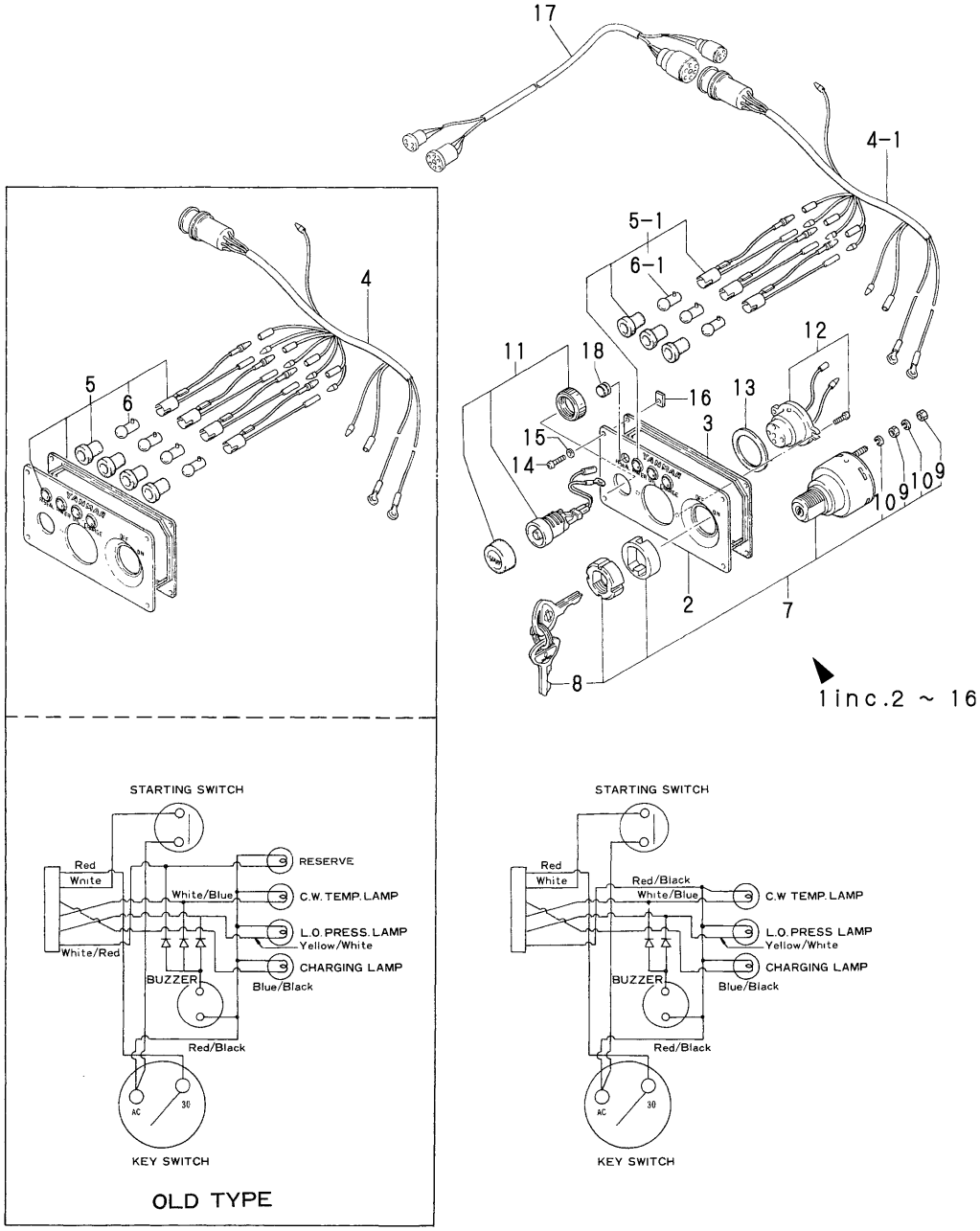

(A)=1GM (B)=2GM(F) (C)=3GM(F) (D)=3GMD (E)=3HM (F)=3HMF

No.	Lev.	Parts No.	Description	Q'ty (A)	(B)	(C)	(D)	(E)	(F)	I	R
1	1	128270-91000	PANEL ASSY, S	1	1	1	1	1	1		
1-1	1	128270-91001	PANEL ASSY	1	1	1	1	1	1	N	
	(A=EXXX)	(B=EXXX)	(C=EXXX) (D=EXXX)	(E=EXXX)				(F=EXXX)			
2	2	128270-91010	BODY, PANEL	1	1	1	1	1	1		
3	2	128270-91020	GASKET	1	1	1	1	1	1		
4	2	128270-91030	HARNESS, WIRE	1	1	1	1	1	1		
4-1	2	128270-91031	HARNESS, WIRE	1	1	1	1	1	1	N	
	(A=EXXX)	(B=EXXX)	(C=EXXX) (D=EXXX)	(E=EXXX)				(F=EXXX)			
5	2	128270-91040	LAMP, PILOT	4	4	4	4	4	4		
5-1	2	128270-91040	LAMP, PILOT	3	3	3	3	3	3	K	
	(A=EXXX)	(B=EXXX)	(C=EXXX) (D=EXXX)	(E=EXXX)				(F=EXXX)			
6	3	46150-001110	BULB(12V3W/G11.BA9S)	4	4	4	4	4	4		
6-1	3	46150-001110	BULB(12V3W/G11.BA9S)	3	3	3	3	3	3	K	
	(A=EXXX)	(B=EXXX)	(C=EXXX) (D=EXXX)	(E=EXXX)				(F=EXXX)			
7	2	124070-91250	SWITCH, KEY	1	1	1	1	1	1		
8	3	124070-91290	KEY, SWITCH	1	1	1	1	1	1		
9	3	26716-050002	NUT, M5	4	4	4	4	4	4		
10	3	22217-050000	WASHER, SPRING 5	4	4	4	4	4	4		
11	2	124070-91300	SWITCH	1	1	1	1	1	1		
12	2	128270-91350	BUZZER, ALARM	1	1	1	1	1	1		
13	2	128270-91360	GASKET	1	1	1	1	1	1		
14	2	128170-91810	SCREW, M5X35	4	4	4	4	4	4		
15	2	128170-91820	WASHER, 5	4	4	4	4	4	4		
16	2	128170-91830	NUT, M5	4	4	4	4	4	4		
17	1	128170-77500	CORD, EXTENSION 3000	1	1	1	1	1	1		
18	1	128270-91230	COVER	1	1	1	1	1	1	W	
	(A=EXXX)	(B=EXXX)	(C=EXXX) (D=EXXX)	(E=EXXX)				(F=EXXX)			

N:Old $\xleftrightarrow[\text{No}]{\text{Yes}}$ New, Q:Old $\xleftrightarrow[\text{Yes}]{\text{No}}$ New, R:Old $\xleftrightarrow[\text{Yes}]{\text{Yes}}$ New, S:Old $\xleftrightarrow[\text{No}]{\text{No}}$ New, W:Add, Z:Discontinued, F:Interchangeable by set, K:Q'ty Change

Copyright (C) YANMAR CO., LTD. All RightsReserved.

Fig.63. SPECIAL TOOL(OPTIONAL)

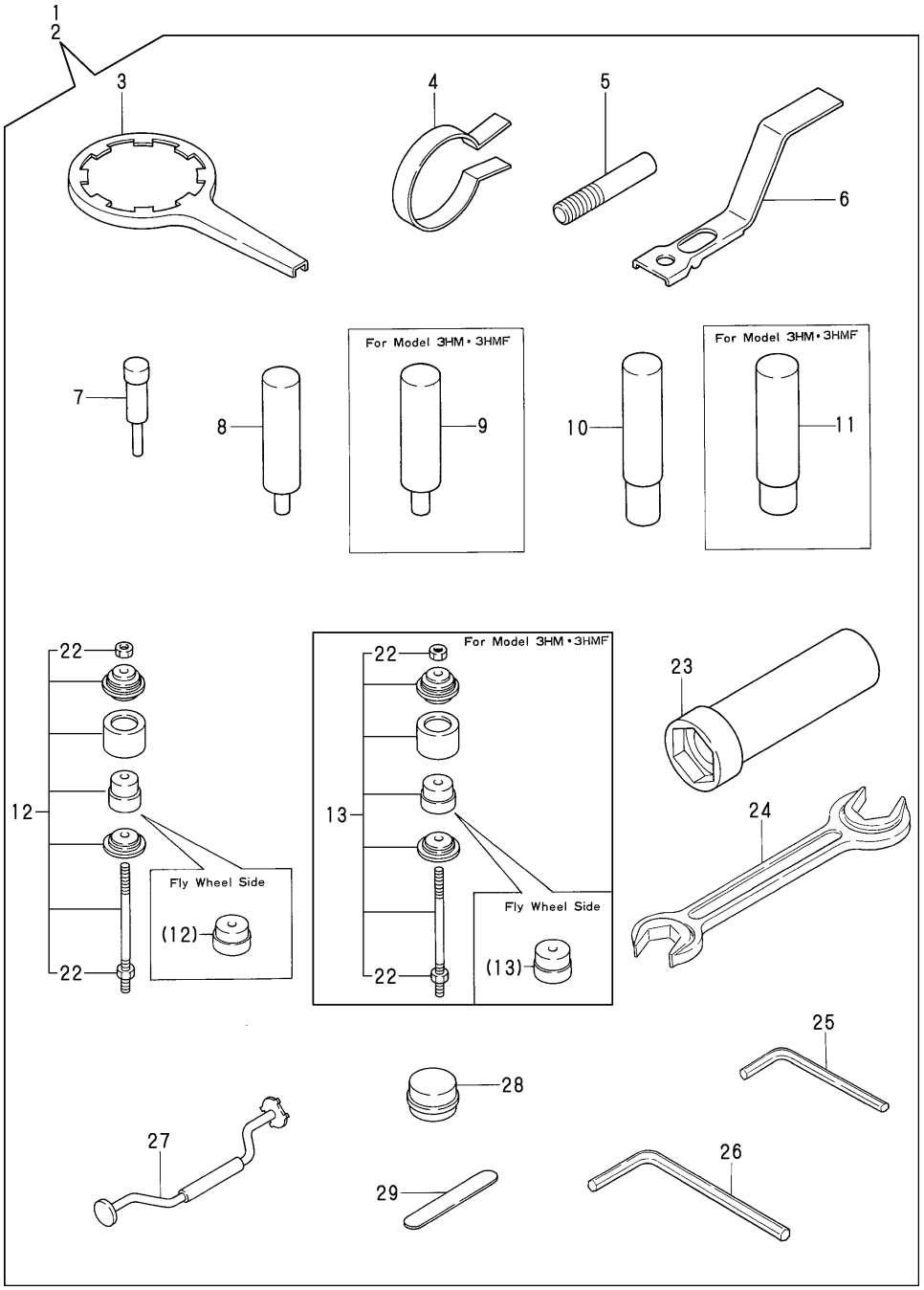

(A)=1GM (B)=2GM(F) (C)=3GM(F) (D)=3GMD (E)=3HM (F)=3HMF

No.	Lev.	Parts No.	Description	Q'ty (A)	(B)	(C)	(D)	(E)	(F)	I	R
1	1	728270-92400	TOOL ASSY, SPECIAL	1	1	1	1				
2	1	728670-92400	TOOL ASSY, SPECIAL					1	1		
3	2	124550-35350	WRENCH, FILTER	1	1	1	1	1	1		
4	2	101200-92140	TOOL, PISTON&RING	1	1	1	1	1	1		
5	2	101104-92180	TOOL, NOZZLE REMOVER	1	1	1	1	1	1		
6	2	124085-92210	TOOL, VALVE REMOVER	1	1	1	1	1	1		
7	2	124085-92250	TOOL, VALVE GUIDE	1	1	1	1	1	1		
8	2	124085-92260	TOOL, PISTON PIN	1	1	1	1				
9	2	128670-92260	TOOL, PISTON PIN					1	1		
10	2	124085-92270	TOOL, PIN BUSH	1	1	1	1				
11	2	128670-92270	TOOL, PIN BUSH					1	1		
12	2	124085-92400	TOOL, METAL REMOVER	1	1	1	1				
13	2	128670-92400	TOOL, METAL REMOVER					1	1		
22	3	26716-160002	NUT, M16	2	2	2	2	2	2		
23	2	124085-92700	WRENCH	1	1	1	1	1	1		
24	2	28110-270300	SPANNER, 27X30	1	1	1	1	1	1		
25	2	28150-040000	WRENCH, BAR 4	1	1	1	1	1	1		
26	2	28150-050000	WRENCH, BAR 5	1	1	1	1	1	1		
27	2	28210-000031	TOOL, VALVE RAPPING	1	1	1	1	1	1		
28	2	28210-000070	COMPOUND	1	1	1	1	1	1		
29	2	28312-150750	GAUGE, 0.15X75	1	1	1	1	1	1		

N:Old $\overset{\text{Yes}}{\underset{\text{No}}{\leftrightarrow}}$ New, Q:Old $\overset{\text{No}}{\underset{\text{Yes}}{\leftrightarrow}}$ New, R:Old $\overset{\text{Yes}}{\underset{\text{Yes}}{\leftrightarrow}}$ New, S:Old $\overset{\text{No}}{\underset{\text{No}}{\leftrightarrow}}$ New, W:Add, Z:Discontinued, F:Interchangeable by set, K:Q'ty Change

Copyright (C) YANMAR CO., LTD. All RightsReserved.

Fig.64. REPAIR KIT(OPTIONAL)

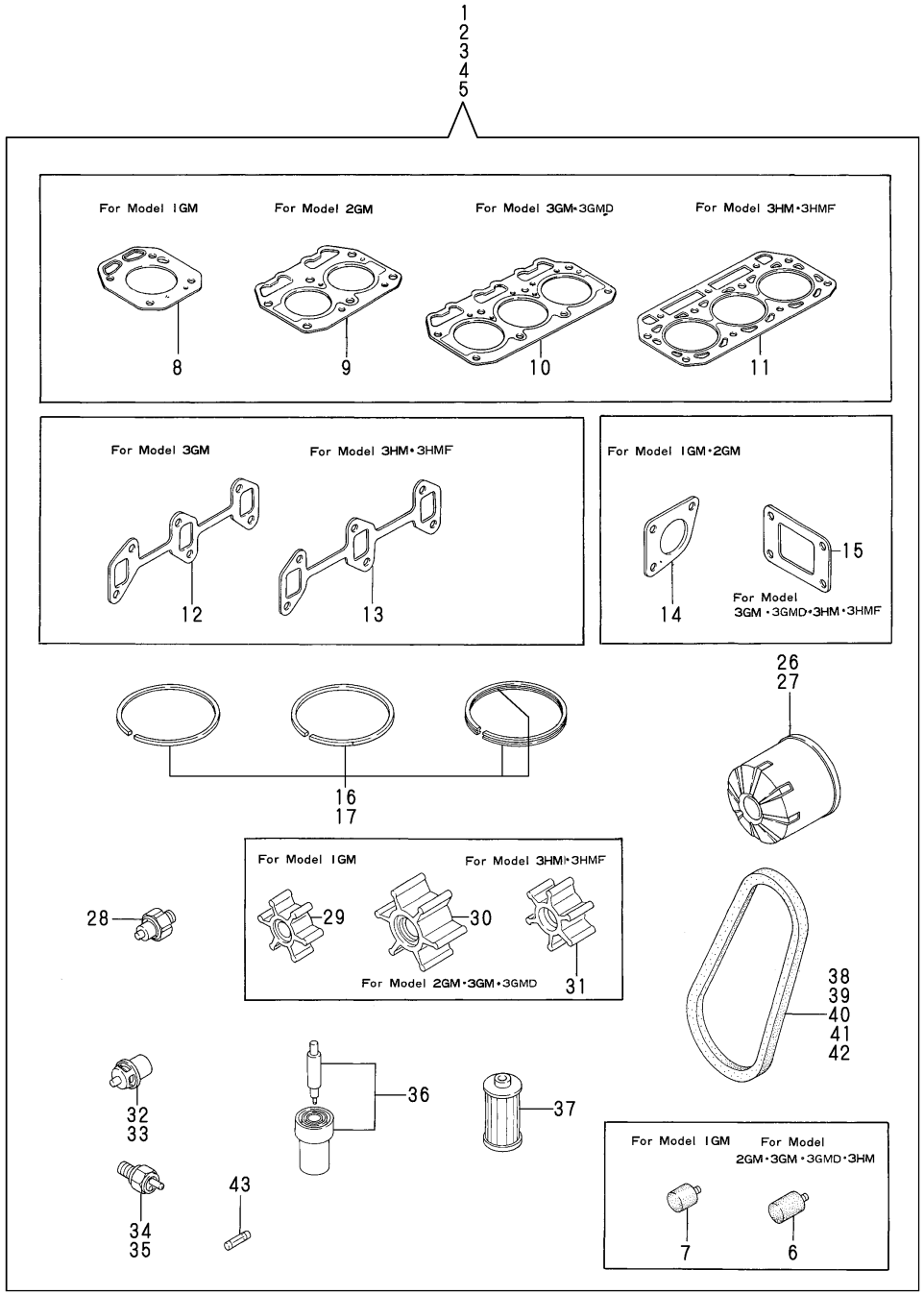

(A)=1GM (B)=2GM(F) (C)=3GM(F) (D)=3GMD (E)=3HM (F)=3HMF

No.	Lev.	Parts No.	Description	Q'ty (A)	(B)	(C)	(D)	(E)	(F)	I	R
1	1	728170-92500	REPAIR KIT	1							
2	1	728270-92500	REPAIR KIT		1						
3	1	728370-92500	REPAIR KIT			1	1				
4	1	728670-92500	REPAIR KIT					1			
5	1	728690-92500	REPAIR KIT						1		
6	2	27210-200300	ZINC, SCREW20X30		2	3	3	3			
7	2	27210-200200	ZINC, SCREW20X20	1							
8	2	128170-01331	GASKET, HEAD	1							
9	2	128270-01331	GASKET, HEAD		1						
10	2	128370-01331	GASKET, HEAD			1	1				
11	2	121575-01333	GASKET, HEAD					1	1		
12	2	121450-13250	GASKET			1	1				
13	2	121550-13520	GASKET					1	1		
14	2	128170-13200	GASKET	1	1						
15	2	128370-13200	GASKET			1	1	1	1		
16	2	721000-22500	RING SET, PISTON	1	2	3	3				
17	2	721575-22500	RING SET, PISTON					3	3		
26	2	124450-35100	FILTER, OIL	1	1	1	1				
27	2	124550-35110	ELEMENT					1	1		
28	2	124060-39451	SWITCH, 0.2KG	1	1	1	1	1	1		
29	2	128170-42070	IMPELLER	1							
30	2	104211-42070	IMPELLER		1	1	1				
31	2	124223-42091	IMPELLER					1	1		
32	2	105582-49200	THERMOSTAT	1	1	1	1	2			
33	2	121750-49800	THERMOSTAT						1		
34	2	128275-91340	SWITCH, 65	1	1	1	1	1			
35	2	127610-91360	SWITCH, 106						1		
36	2	124770-53000	VALVE ASSY,INJECTION	1	2	3	3	3	3		
37	2	104500-55710	ELEMENT	1	1	1	1	1	1		
38	2	104511-78780	V-BELT, M/19		1	1	1	1	1		
39	2	128170-77350	V-BELT, HM29	1							
40	2	25132-003000	V-BELT, A30		1	1	1				
41	2	128670-77350	V-BELT, A31					1			
42	2	128695-44780	V-BELT, A39.5						1		
43	2	46150-003680	FUSE 30A	1	1	1	1	1	1		

N:Old ←Yes/No→ New, Q:Old ←No/Yes→ New, R:Old ←Yes/Yes→ New, S:Old ←No/No→ New, W:Add, Z:Discontinued, F:Interchangeable by set, K:Q'ty Change

Copyright (C) YANMAR CO., LTD. All RightsReserved.

Fig.65. GASKET KIT(OPTIONAL)

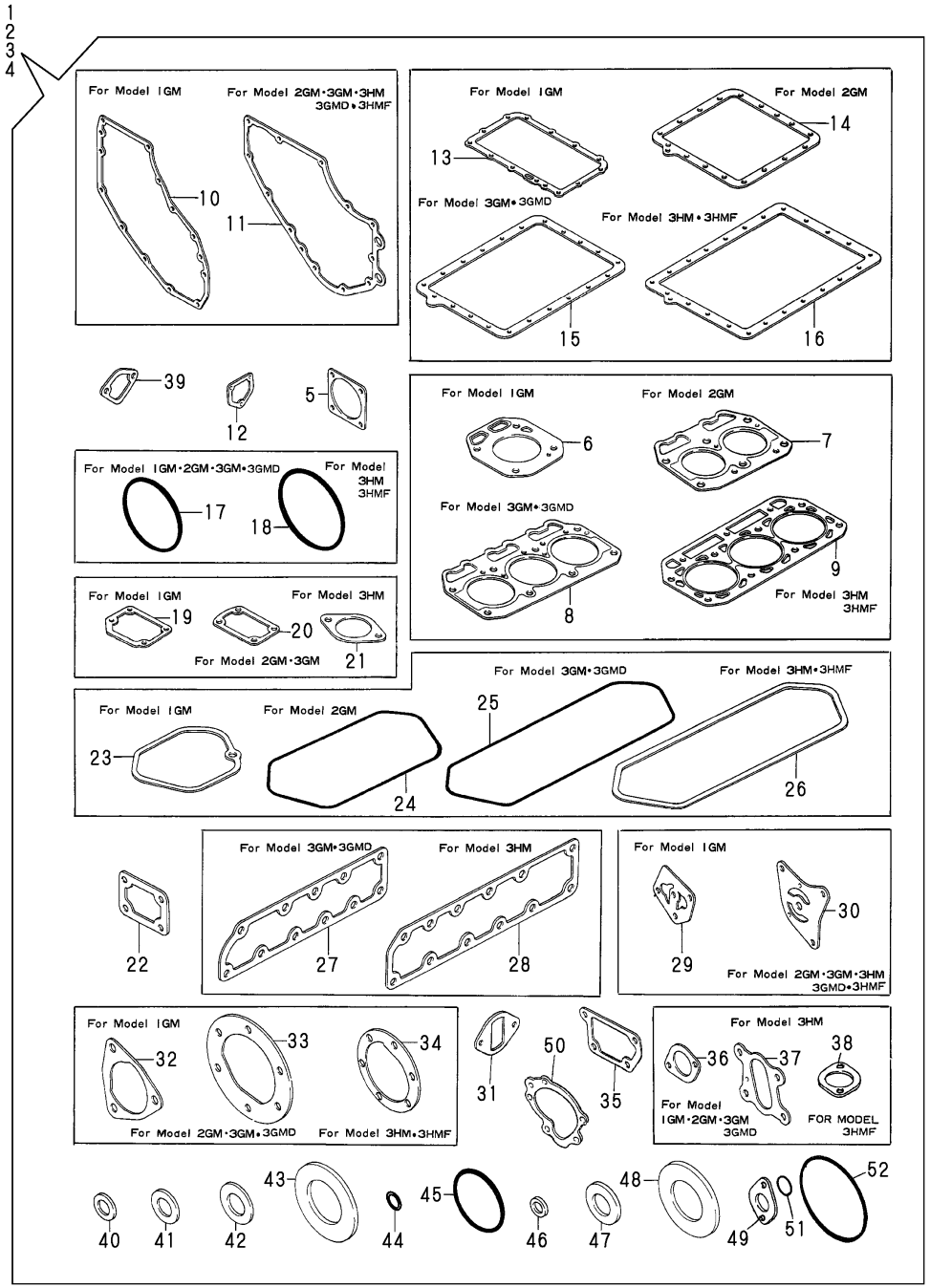

(A)=1GM (B)=2GM(F) (C)=3GM(F) (D)=3GMD (E)=3HM (F)=3HMF

No.	Lev.	Parts No.	Description	Q'ty (A)	(B)	(C)	(D)	(E)	(F)	I	R
1	1	728170-92600	GASKET SET	1							
2	1	728270-92600	GASKET SET		1						
3	1	728370-92600	GASKET SET			1	1				
4	1	728670-92600	GASKET SET					1	1		
5	2	124240-01882	GASKET	1	1	1	1	1	1		
6	2	128170-01331	GASKET, HEAD	1							
7	2	128270-01331	GASKET, HEAD		1						
8	2	128370-01331	GASKET, HEAD			1	1				
9	2	121575-01333	GASKET, HEAD					1	1		
10	2	128170-01510	GASKET, GEAR CASE	1							
11	2	121575-01510	GASKET, GEAR CASE		1	1	1	1	1		
12	2	121575-01860	GASKET		1	1	1	1	1		
13	2	128170-01750	GASKET, OIL SUMP	1							
14	2	124000-01750	GASKET, OIL SUMP		1						
15	2	121450-01751	GASKET, OIL SUMP			1	1				
16	2	121575-01750	GASKET, OIL SUMP					1	1		
17	2	105225-02020	O-RING	1	1	1	1				
18	2	24341-001350	O-RING, 1AS135.0					1	1		
19	2	128170-03070	GASKET	1							
20	2	121000-03070	GASKET		1	1	1				
21	2	121450-03071	GASKET					1	1		
22	2	121450-11680	GASKET		1	1	1	1	1		
23	2	128170-11310	GASKET, BONNET	1							
24	2	128270-11310	GASKET, BONNET		1						
25	2	121450-11310	GASKET, BONNET			1	1				
26	2	128670-11310	GASKET, BONNET					1	1		
26-1	2	121550-11310	GASKET, BONNET					1	1	S	
				(E=EXXX)				(F=EXXX)			
27	2	128370-13180	GASKET			1	1				
28	2	128670-13180	GASKET					1	1		
29	2	128170-32030	GASKET	1							
30	2	121450-32021	GASKET, PUMP		1	1	1	1	1		
31	2	124160-34844	GASKET			1	1				
32	2	128170-42090	GASKET	1							
33	2	104211-42090	GASKET		1	1	1				
34	2	124223-42110	GASKET, WATER PUMP		1	1	1	1	1		
35	2	121450-44410	GASKET		1	1	1	1	1		
36	2	104211-49160	GASKET	1	1	1	1				
37	2	121575-49160	GASKET					1			
38	2	124736-49540	GASKET						1		
39	2	121520-01850	GASKET	1	1	1	1	1	1		
40	2	23414-080000	GASKET, 8X1.0	20	20	20	20	20	20		
41	2	23414-100000	GASKET, 10X1.0	5	5	5	5	5	5		
42	2	23414-120000	GASKET, 12X1.0	20	20	20	20	20	20		
43	2	23414-250000	GASKET, 25X1.0		5	5	5	5	5		
44	2	24311-000100	O-RING, 1AP10.0		2	2	2	2	2		
45	2	24321-000350	O-RING, 1AG35.0	1	1	1	1	1	1		
46	2	43400-500390	SEAL WASHER 6S	2	2	2	2	2	2		
47	2	43400-500450	SEAL WASHER 12S	2	2	2	2	2	2		
48	2	43400-500570	SEAL WASHER 24S	1							
49	2	128695-01840	GASKET					1	1	W	

N:Old $\xleftarrow[\text{No}]{\text{Yes}}$ New, Q:Old $\xleftarrow[\text{Yes}]{\text{No}}$ New, R:Old $\xleftarrow[\text{Yes}]{\text{Yes}}$ New, S:Old $\xleftarrow[\text{No}]{\text{No}}$ New, W:Add, Z:Discontinued, F:Interchangeable by set, K:Q'ty Change

++ CONTINUE ++

Copyright (C) YANMAR CO., LTD. All RightsReserved.

Fig.65. GASKET KIT(OPTIONAL)

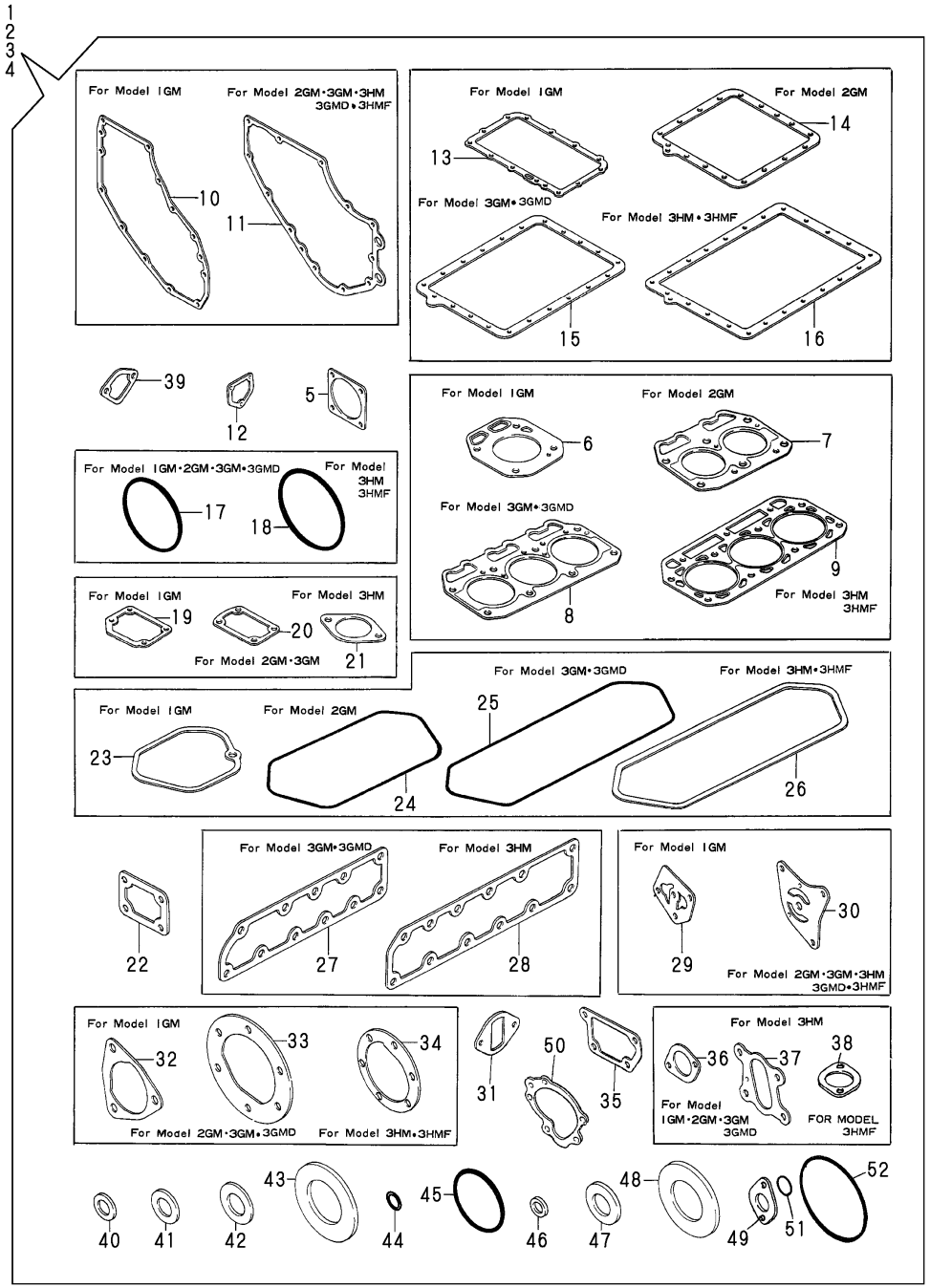

(A)=1GM (B)=2GM(F) (C)=3GM(F) (D)=3GMD (E)=3HM (F)=3HMF

No.	Lev.	Parts No.	Description	Q'ty (A)	(B)	(C)	(D)	(E)	(F)	I	R
					(E=EXXX)			(F=EXXX)			
50	2	121000-42050	GASKET, WATER PUMP		1	1	1	1	1	W	
			(B=EXXX) (C=EXXX) (D=EXXX)		(E=EXXX)			(F=EXXX)			
51	2	24311-000160	O-RING, 1AP16.0		1	1	1	1	1	W	
			(B=EXXX) (C=EXXX) (D=EXXX)		(E=EXXX)			(F=EXXX)			
52	2	24311-000700	O-RING, 1AP70.0		2	2	2	2	2		

N:Old ←Yes/No→ New, Q:Old ←No/Yes→ New, R:Old ←Yes/Yes→ New, S:Old ←No/No→ New, W:Add, Z:Discontinued, F:Interchangeable by set, K:Q'ty Change

Copyright (C) YANMAR CO., LTD. All RightsReserved.

Fig.66. CLUTCH HOUSING

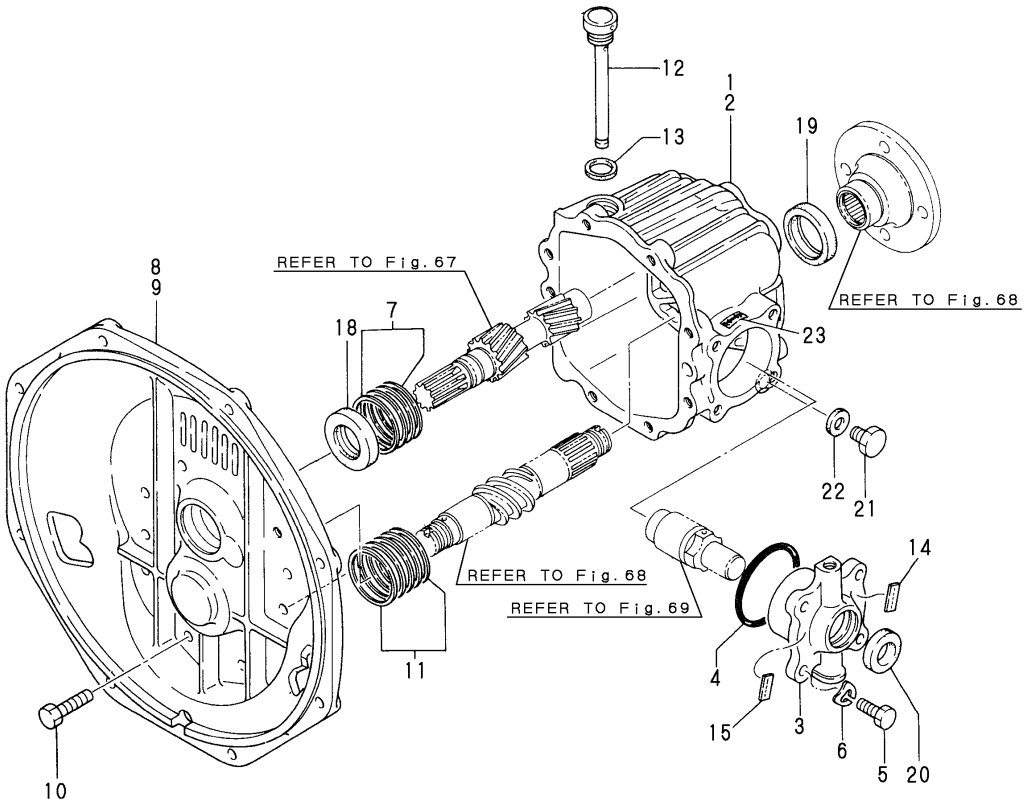

(A)=1GM (B)=2GM(F) (C)=3GMF (D)=3GMD (E)=3HM (F)=3HMF

No.	Lev.	Parts No.	Description	Q'ty (A)	(B)	(C)	(D)	(E)	(F)	I	R
1	1	177088-02011	HOUSING, CLUTCH	1	1						
2	1	177070-02011	HOUSING, CLUTCH			1	1				
3	1	177088-02091	COVER	1	1	1	1				
4	1	24341-000600	O-RING, 1AS60.0	1	1	1	1				
5	1	26116-080202	BOLT, M8X 20 PLATED	4	4	4	4				
6	1	22287-080000	WASHER, 8	4	4	4	4				
7	1	177088-02350	SHIM SET	1	1	1	1				
8	1	177088-02032	FLANGE	1	1						
9	1	177070-02031	FLANGE, CLUTCH			1	1				
10	1	26116-080252	BOLT, M8X 25 PLATED	8	8	8	8				
11	1	177090-02250	SHIM	1	1	1	1				
12	1	177088-02450	DIPSTICK	1	1	1	1				
13	1	23414-160021	GASKET, 16X1.0	1	1	1	1				
14	1	177090-02620	LABEL	1	1						
15	1	170090-02630	LABEL	1	1						
18	1	177088-02950	SEAL SC25 40 8, OIL	1	1	1	1				
19	1	177088-02961	SEAL MHSA34 44 8,OIL	1	1	1	1				
20	1	177088-02970	SEAL, OIL	1	1	1	1				
21	1	23883-100002	PLUG, 10	1	1	1	1				
22	1	23414-100000	GASKET, 10X1.0	1	1	1	1				
23	1	177088-02430	LABEL			1	1				

N:Old $\xleftarrow[\text{No}]{\text{Yes}}$ New, Q:Old $\xleftarrow[\text{Yes}]{\text{No}}$ New, R:Old $\xleftarrow[\text{Yes}]{\text{Yes}}$ New, S:Old $\xleftarrow[\text{No}]{\text{No}}$ New, W:Add, Z:Discontinued, F:Interchangeable by set, K:Q'ty Change

Copyright (C) YANMAR CO., LTD. All RightsReserved.

Fig.67. INPUT SHAFT & IDLE GEAR SHAFT

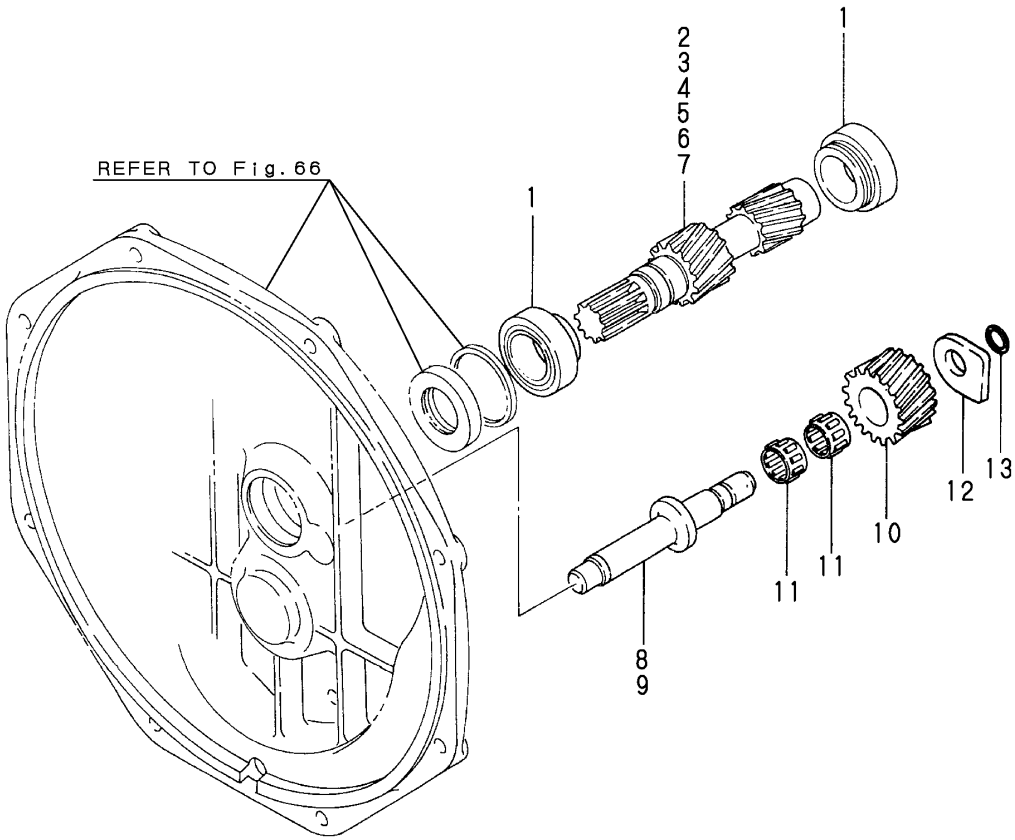

(A)=1GM (B)=2GM(F) (C)=3GMF (D)=3GMD (E)=3HM (F)=3HMF

No.	Lev.	Parts No.	Description	Q'ty (A)	(B)	(C)	(D)	(E)	(F)	I	R
1	1	177088-03400	ROLLER BERING	2	2	2	2				
2	1	177088-03030	SHAFT, INPUT	1	1						
3	1	177088-03011	SHAFT, INPUT I=2.62	1	1						
4	1	177088-03020	SHAFT, INPUT I=3.22	1	1						
5	1	177070-03030	SHAFT, INPUT			1	1				
6	1	177070-03010	SHAFT, INPUT			1	1				
7	1	177070-03020	SHAFT, INPUT			1	1				
8	1	177088-03301	SHAFT, IDLE	1	1						
9	1	177070-03301	SHAFT, IDLE			1	1				
10	1	177088-03311	GEAR, IDLE Z=26	1	1	1	1				
11	1	177088-03331	NEEDLE BERG.#K162213	2	2	2	2				
12	1	177088-03341	WASHER, THRUST	1	1	1	1				
13	1	24341-000120	O-RING, 1AS12.0	1	1	1	1				

N:Old $\overset{\text{Yes}}{\underset{\text{No}}{\leftrightarrow}}$ New, Q:Old $\overset{\text{No}}{\underset{\text{Yes}}{\leftrightarrow}}$ New, R:Old $\overset{\text{Yes}}{\underset{\text{Yes}}{\leftrightarrow}}$ New, S:Old $\overset{\text{No}}{\underset{\text{No}}{\leftrightarrow}}$ New, W:Add, Z:Discontinued, F:Interchangeable by set, K:Q'ty Change

Copyright (C) YANMAR CO., LTD. All RightsReserved.

Fig.68. OUTPUT SHAFT

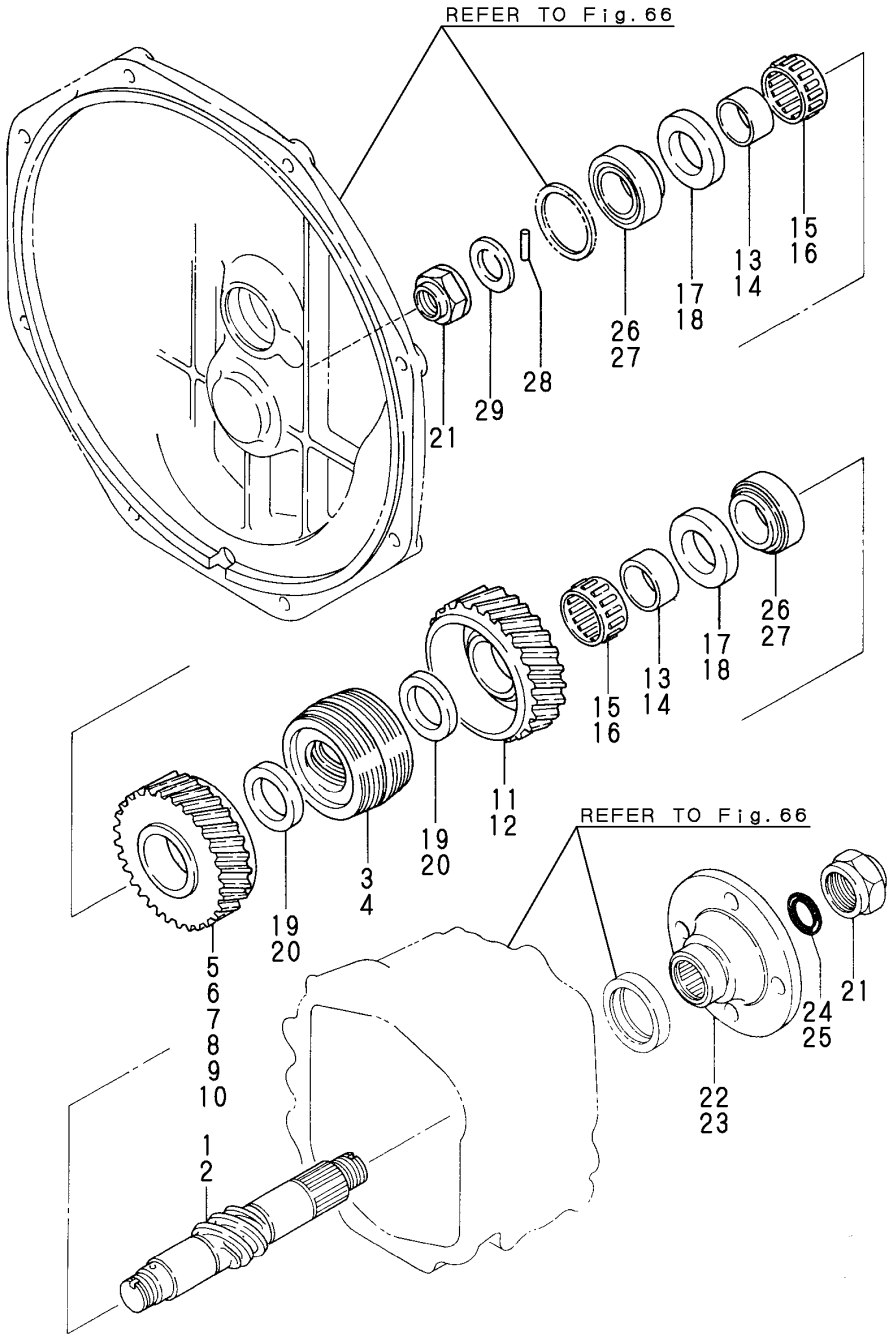

(A)=1GM (B)=2GM(F) (C)=3GMF (D)=3GMD (E)=3HM (F)=3HMF

No.	Lev.	Parts No.	Description	Q'ty (A)	(B)	(C)	(D)	(E)	(F)	I	R
1	1	177088-03091	SHAFT, OUTPUT	1	1						
2	1	177070-03040	SHAFT, OUTPUT			1	1				
3	1	177088-03071	CONE, DRIVE	1	1						
4	1	177070-03070	CONE, DRIVE			1	1				
5	1	177088-03130	GEAR, FORWARD Z=53	1	1						
6	1	177088-03110	GEAR, FORWARD Z=55	1	1						
7	1	177088-03120	GEAR, FORWARD Z=58	1	1						
8	1	177070-03130	GEAR, FORWARD Z=59			1	1				
9	1	177070-03111	GEAR, Z=60			1	1				
10	1	177070-03121	GEAR, FORWARD Z=64			1	1				
11	1	177088-03110	GEAR, FORWARD Z=55	1	1						
12	1	177070-03111	GEAR, Z=60			1	1				
13	1	177088-03192	RACE, INNER	2	2						
14	1	177070-03190	RACE, BEARING			2	2				
15	1	177088-03201	NEEDLE BERG.#K303517	2	2						
16	1	177070-03200	NEEDLE BEARING			2	2				
17	1	177088-03232	COLLAR, THRUST	2	2						
18	1	177070-03230	COLLAR, THRUST			2	2				
19	1	177088-03252	COLLAR, THRUST	2	2						
20	1	177070-03250	COLLAR, THRUST			2	2				
21	1	177088-03272	NUT	2	2	2	2				
22	1	177088-03552	COUPLING	1	1						
23	1	177070-03550	COUPLING			1	1				
24	1	24311-000180	O-RING, 1AP18.0	1	1						
25	1	24311-000210	O-RING, 1AP21.0			1	1				
26	1	177088-03520	R.BEARING07087/07204	2	2						
27	1	24141-302050	BEARING, 30205			2	2				
28	1	177088-03290	PIN	1	1	1	1				
29	1	177088-03280	COLLAR, 32D-45T	1	1	1	1				

N:Old ◄Yes/No► New, Q:Old ◄No/Yes► New, R:Old ◄Yes/Yes► New, S:Old ◄No/No► New, W:Add, Z:Discontinued, F:Interchangeable by set, K:Q'ty Change

Copyright (C) YANMAR CO., LTD. All RightsReserved.

Fig.69. CONTROL DEVICE

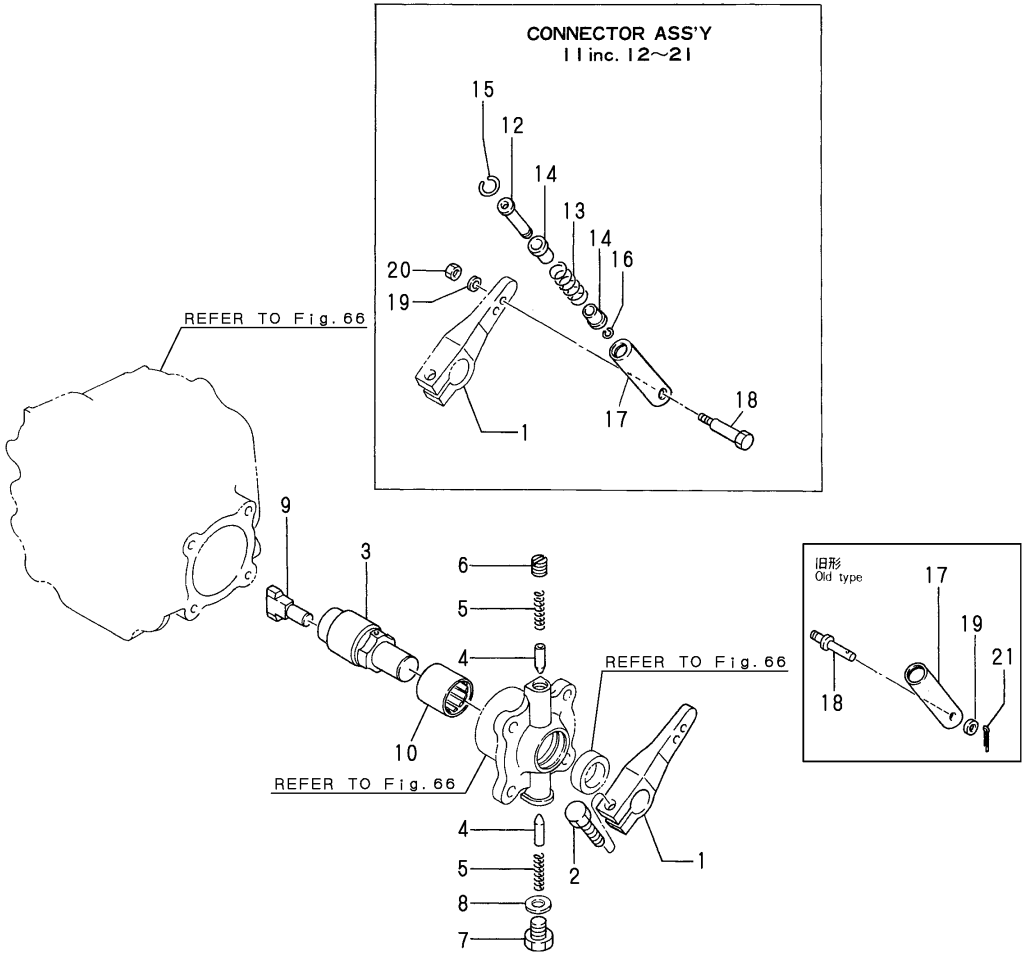

(A)=1GM (B)=2GM(F) (C)=3GMF (D)=3GMD (E)=3HM (F)=3HMF

No.	Lev.	Parts No.	Description	Q'ty (A)	(B)	(C)	(D)	(E)	(F)	I	R
1	1	177095-06040	LEVER	1	1	1	1				
2	1	26116-080252	BOLT, M8X 25 PLATED	1	1	1	1				
3	1	177088-06010	SHAFT	1	1	1	1				
4	1	177095-03190	PIN	2	2	2	2				
5	1	177088-06020	SPRING	2	2	2	2				
6	1	26911-100102	SCREW, M10X10	1	1	1	1				
7	1	23883-100002	PLUG, 10	1	1	1	1				
8	1	23414-100000	GASKET, 10X1.0	1	1	1	1				
9	1	177088-06050	SHIFTER	1	1	1	1				
10	1	177088-06070	NEEDLE BERG. #HK3026	1	1	1	1				
11	1	177088-06090	CONNECTOR ASSY	1	1	1	1				
12	2	177088-06120	CONNECTOR	1	1	1	1				
13	2	177088-06170	SPRING	1	1	1	1				
14	2	177088-06140	RETAINER, SPRING	2	2	2	2				
15	2	177088-06150	CIRCLIP	1	1	1	1				
16	2	177088-06160	CIRCLIP	1	1	1	1				
17	2	177088-06110	HOLDER	1	1	1	1				
18	2	177088-06100	CONNECTOR	1	1	1	1				
19	2	22117-060000	WASHER, 6	2	2	2	2			Z	
	(A=EXXX)	(B=EXXX)	(C=EXXX) (D=EXXX)								
20	2	26756-060002	NUT, LOCK M6	1	1	1	1				
21	2	22417-250150	PIN 2.5* 15	1	1					Z	
	(A=EXXX)	(B=EXXX)									

N:Old ←Yes/No→ New, Q:Old ←No/Yes→ New, R:Old ←Yes/Yes→ New, S:Old ←No/No→ New, W:Add, Z:Discontinued, F:Interchangeable by set, K:Q'ty Change

Copyright (C) YANMAR CO., LTD. All RightsReserved.

Fig.70. CLUTCH HOUSING

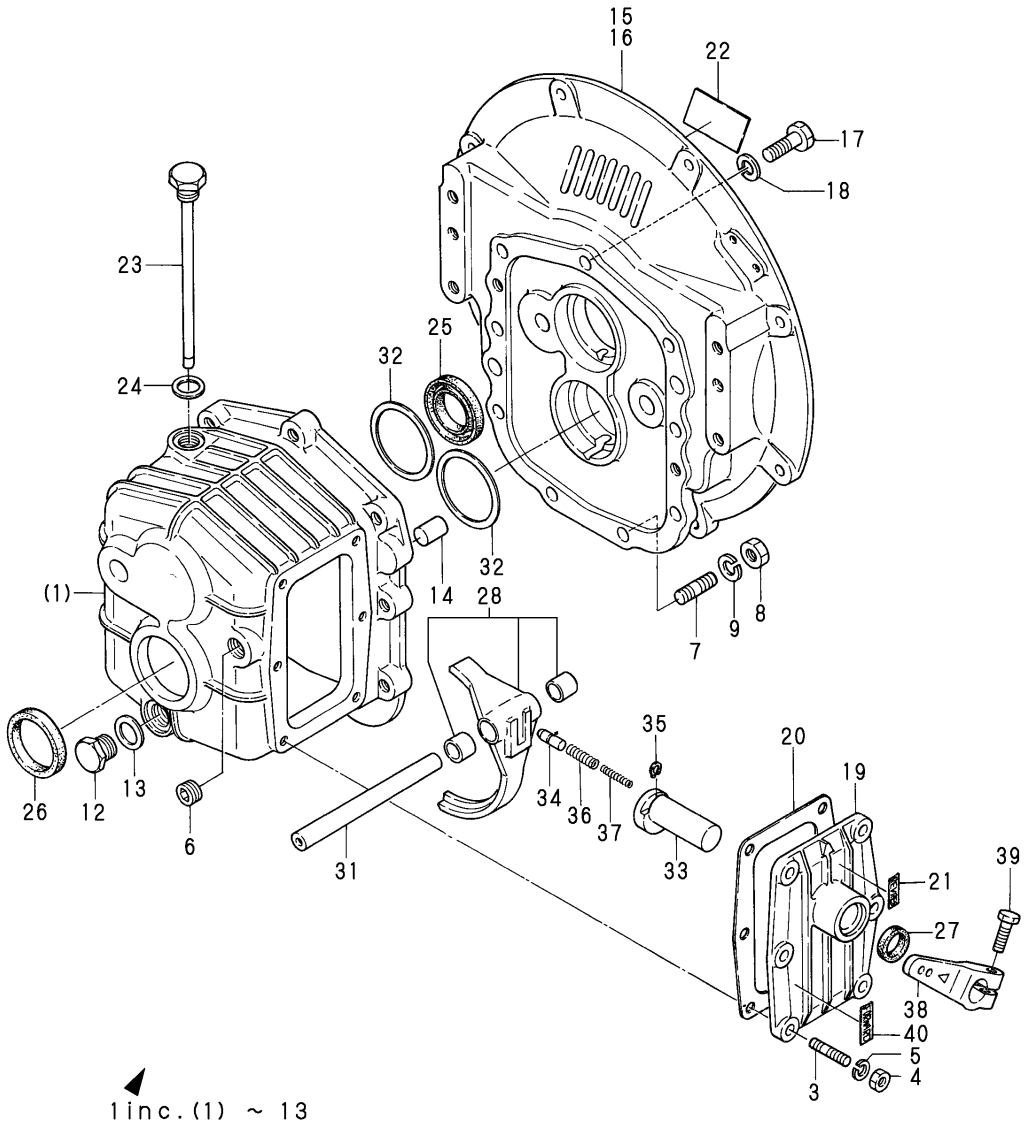

(A)=1GM (B)=2GM(F) (C)=3GM (D)=3GMD (E)=3HM (F)=3HMF

No.	Lev.	Parts No.	Description	Q'ty (A)	(B)	(C)	(D)	(E)	(F)	I	R
1	1	777099-02550	HOUSING ASSY, CLUTCH			1		1	1		
3	2	26286-080222	STUD M 8X 22 PLATED			6		6	6		
4	2	26716-080002	NUT, M8			6		6	6		
5	2	22287-080000	WASHER, 8			6		6	6		
6	2	177099-06050	PLUG			1		1	1		
7	2	26223-100222	STUD, M10X 22			4		4	4		
8	2	26713-100002	NUT, M10			4		4	4		
9	2	22133-100000	WASHER, 10			4		4	4		
12	2	23883-160002	PLUG, 16			1		1	1		
13	2	23414-160021	GASKET, 16X1.0			1		1	1		
14	1	177099-02130	PIN, PARALLEL			2		2	2		
15	1	177094-02120	FLANGE, MOUNTING			1					
16	1	177080-02030	FLANGE, MOUNTING					1	1		
17	1	26116-100302	BOLT, M10X 30 PLATED			5		5	5		
18	1	22287-100000	WASHER, 10			5		5	5		
19	1	177099-02081	COVER			1		1	1		
20	1	177099-02091	GASKET			1		1	1		
21	1	177090-02630	LABEL			1		1	1		
22	1	177095-02400	LABEL			1		1	1		
23	1	177099-02450	DIPSTICK			1		1	1		
24	1	23414-160021	GASKET, 16X1.0			1		1	1		
25	1	177099-02950	SEAL TC30 52 8, OIL			1		1	1		
26	1	177099-02960	SEAL TC40 52 8, OIL			1		1	1		
27	1	177095-02980	SEAL, OIL			1		1	1		
28	1	177099-06010	FORK ASSY			1		1	1		
31	1	177099-06041	SHAFT, SHIFT			1		1	1		
32	1	177099-02250	SHIM SET			2		2	2		
33	1	177095-06030	CAM, SHIFT			1		1	1		
34	1	177095-06050	PIN			1		1	1		
35	1	177095-06140	CIRCLIP			1		1	1		
36	1	177095-03200	SPRING			1		1	1		
37	1	177095-06060	SPRING			1		1	1		
38	1	177095-06040	LEVER			1		1	1		
39	1	26116-080252	BOLT, M8X 25 PLATED			1		1	1		
40	1	177090-02620	LABEL			1		1	1		

N:Old $\overset{\text{Yes}}{\underset{\text{No}}{\leftrightarrows}}$ New, Q:Old $\overset{\text{No}}{\underset{\text{Yes}}{\leftrightarrows}}$ New, R:Old $\overset{\text{Yes}}{\underset{\text{Yes}}{\leftrightarrows}}$ New, S:Old $\overset{\text{No}}{\underset{\text{No}}{\leftrightarrows}}$ New, W:Add, Z:Discontinued, F:Interchangeable by set, K:Q'ty Change

Copyright (C) YANMAR CO., LTD. All RightsReserved.

Fig.71. INPUT SHAFT & IDLE GEAR SHAFT

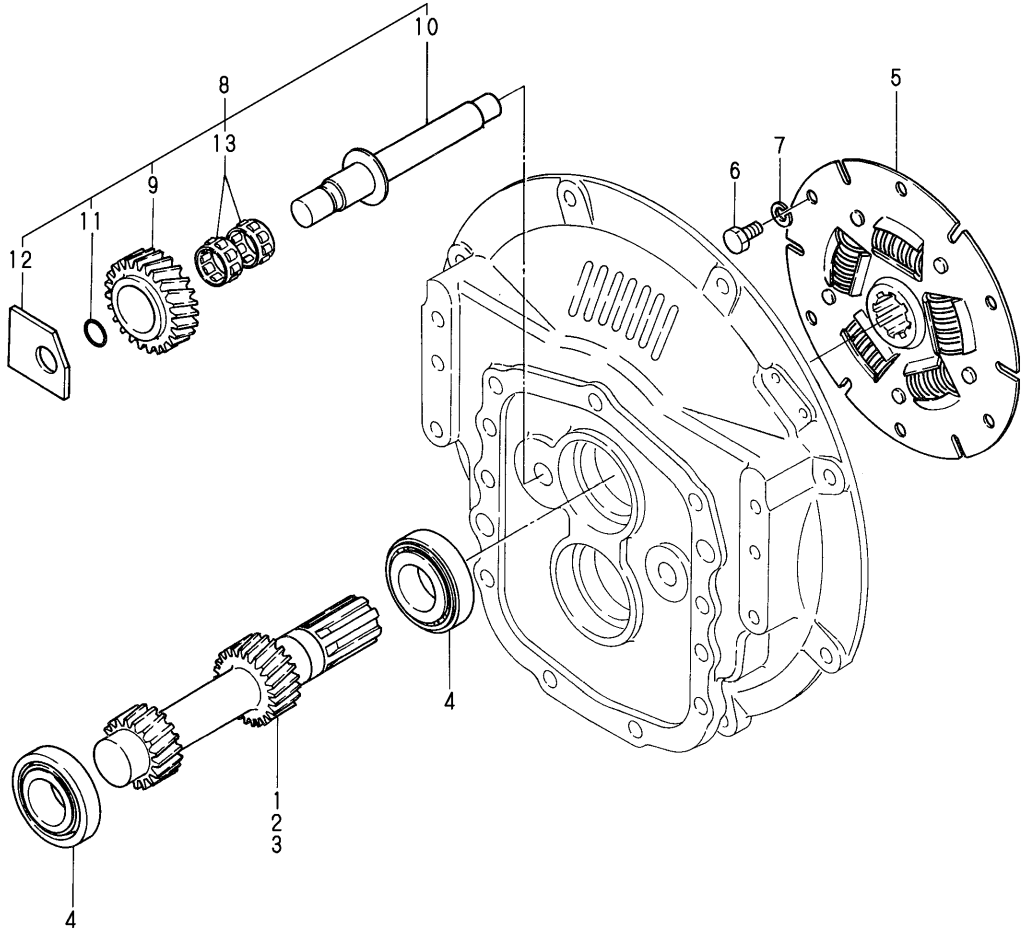

(A)=1GM
(B)=2GM(F)
(C)=3GM
(D)=3GMD
(E)=3HM
(F)=3HMF

No.	Lev.	Parts No.	Description	Q'ty (A)	(B)	(C)	(D)	(E)	(F)	I	R
1	1	177099-03011	SHAFT, INPUT I=2.14			1		1	1		
2	1	177099-03380	SHAFT, INPUT I=2.63			1					
3	1	177099-03411	SHAFT, INPUT I=2.83			1		1	1		
4	1	177099-03920	ROLLER BEARING			2		2	2		
5	1	177099-03500	DISK, DAMPER			1		1	1		
6	1	26116-080142	BOLT 8X14			6		6	6		
7	1	22217-080000	WASHER, SPRING 8			6		6	6		
8	1	777099-03021	SHAFT ASSY			1		1	1		
9	2	177099-03301	GEAR, IDLE Z=25			1		1	1		
10	2	177099-03980	SHAFT, GEAR			1		1	1		
11	2	24341-000150	O-RING, 1AS15.0			1		1	1		
12	2	177099-03321	WASHER			1		1	1		
13	2	177099-03901	NEEDLE BEARING			2		2	2		

N:Old $\xleftrightarrow[\text{No}]{\text{Yes}}$ New, Q:Old $\xleftrightarrow[\text{Yes}]{\text{No}}$ New, R:Old $\xleftrightarrow[\text{Yes}]{\text{Yes}}$ New, S:Old $\xleftrightarrow[\text{No}]{\text{No}}$ New, W:Add, Z:Discontinued, F:Interchangeable by set, K:Q'ty Change

Copyright (C) YANMAR CO., LTD. All RightsReserved.

Fig.72. OUTPUT SHAFT

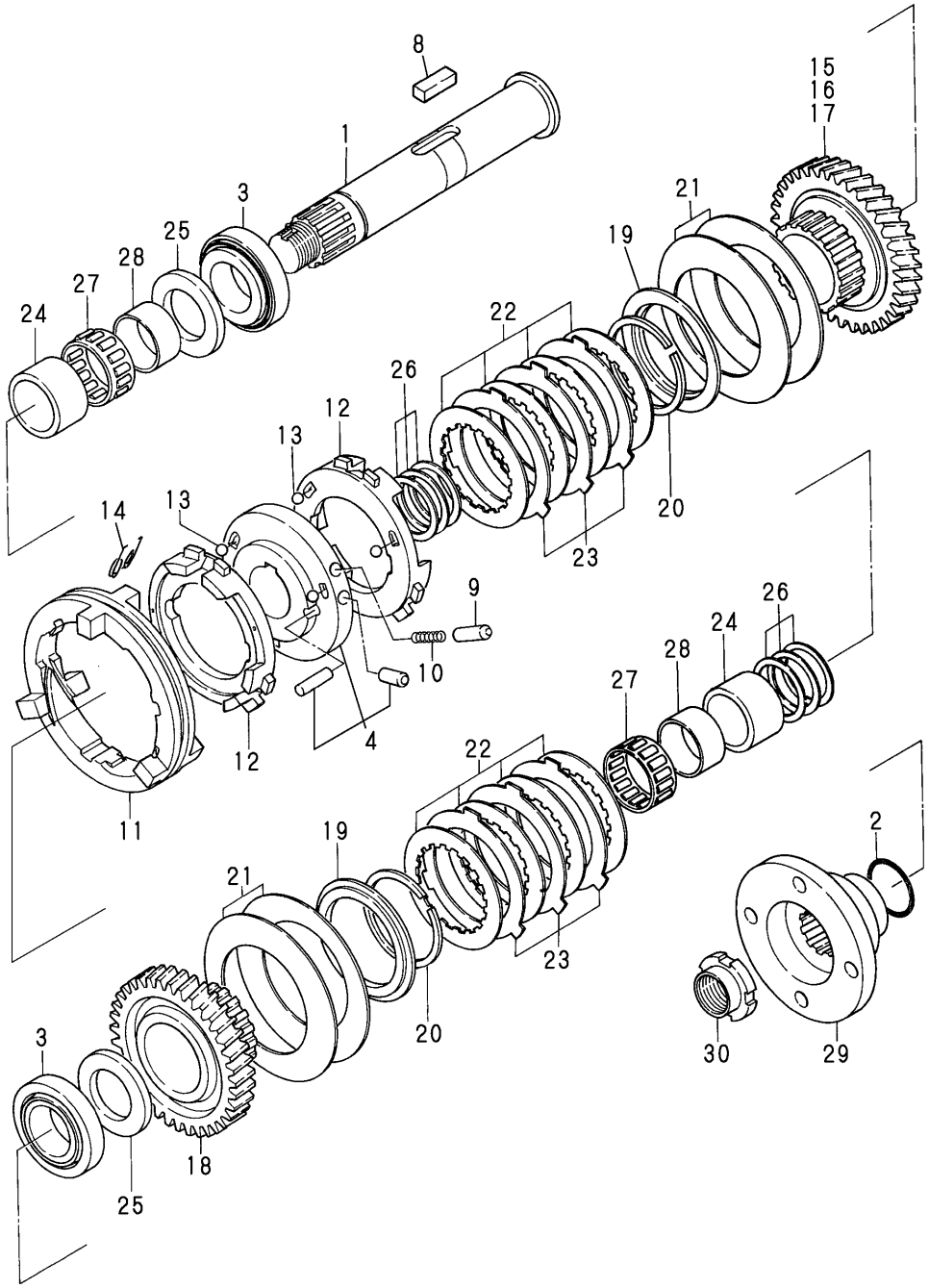

(A)=1GM (B)=2GM(F) (C)=3GM (D)=3GMD (E)=3HM (F)=3HMF

No.	Lev.	Parts No.	Description	Q'ty (A)	(B)	(C)	(D)	(E)	(F)	I	R
1	1	177099-03021	SHAFT, OUTPUT			1		1	1		
2	1	24341-000300	O-RING, 1AS30.0			1		1	1		
3	1	177099-03920	ROLLER BEARING			2		2	2		
4	1	177099-03040	PLATE ASSY, DRIVE			1		1	1		
8	1	177090-03230	KEY			1		1	1		
9	1	177095-03190	PIN			3		3	3		
10	1	177095-03200	SPRING			3		3	3		
11	1	177099-03070	RING, SHIFT			1		1	1		
12	1	177099-03080	PLATE, PRESSURE			2		2	2		
13	1	177090-03180	BALL, STEEL			6		6	6		
14	1	177095-03210	SPRING			3		3	3		
15	1	177099-03101	GEAR, Z=47 I=2.14			1		1	1		
16	1	177099-03390	GEAR, Z=50 I=2.63			1					
17	1	177099-03431	GEAR, Z=51 I=2.83			1		1	1		
18	1	177099-03111	GEAR, Z=45			1		1	1		
19	1	177090-03110	RETAINER			2		2	2		
20	1	177095-03280	CIRCLIP			2		2	2		
21	1	177090-03121	SPRING			4		2	2		
22	1	177090-03080	DISK, D78 T1.7			8		8	8		
23	1	177090-03090	PLATE, STEEL			6		6	6		
24	1	177099-03161	SPACER			2		2	2		
25	1	177090-03270	COLLAR, THRUST			2		2	2		
26	1	177095-03800	SHIM SET			2		2	2		
27	1	177095-03900	ROLLER BEARING			2		2	2		
28	1	177099-03470	RACE, INNER			2		2	2		
29	1	177099-03550	COUPLING			1		1	1		
30	1	177099-03540	NUT, LOCK			1		1	1		

N:Old $\frac{\text{Yes}}{\text{No}}$ New, Q:Old $\frac{\text{No}}{\text{Yes}}$ New, R:Old $\frac{\text{Yes}}{\text{Yes}}$ New, S:Old $\frac{\text{No}}{\text{No}}$ New, W:Add, Z:Discontinued, F:Interchangeable by set, K:Q'ty Change

Copyright (C) YANMAR CO., LTD. All RightsReserved.

Fig.73. COOLING SEA WATER PUMP

[For Heat Exchanger Refit Engine]

1 inc. (1)～21

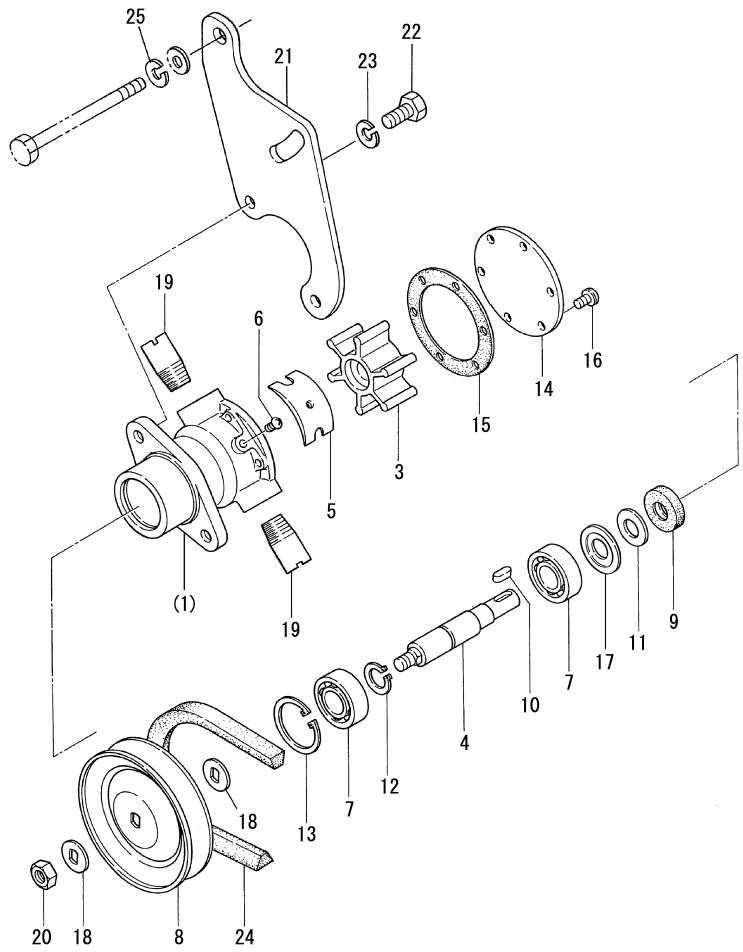

(A)=1GM (B)=2GM (C)=3GM (D)=3GMD (E)=3HM (F)=3HMF

No.	Lev.	Parts No.	Description	Q'ty (A)	(B)	(C)	(D)	(E)	(F)	I	R
1	1	121575-42000	PUMP ASSY, WATER		1	1		1			
3	2	124223-42091	IMPELLER		1	1		1			
4	2	121575-42020	SHAFT		1	1		1			
5	2	124323-42100	CAM, IMPELLER		1	1		1			
6	2	26554-040102	SCREW, M4X10		1	1		1			
7	2	24107-062024	BEARING, BALL 6202ZZ		2	2		2			
8	2	124070-42400	V-PULLEY		1	1		1			
9	2	124223-42080	SEAL, TC13X28X7		1	1		1			
10	2	124223-42040	KEY		1	1		1			
11	2	124223-42070	PIECE		1	1		1			
12	2	22242-000150	RING, 15		1	1		1			
13	2	22252-000350	RING, 35		1	1		1			
14	2	121575-42150	COVER		1	1		1			
15	2	124223-42110	GASKET, WATER PUMP		1	1		1			
16	2	26554-040082	SCREW, M4X 8		6	6		6			
17	2	121575-42120	COVER, BEARING		1	1		1			
18	2	124070-42420	WASHER		2	2		2			
19	2	121575-49300	JOINT, PIPE		2	2		2			
20	2	26347-080002	NUT, M8		1	1		1			
21	2	128270-42150	BRACKET, PUMP		1	1		1			
22	1	26116-080142	BOLT 8X14		2	2		2			
23	1	22217-080000	WASHER, SPRING 8		2	2		2			
24	1	104511-78780	V-BELT, M/19		1	1		1			
25	1	22217-080000	WASHER, SPRING 8		2	2		2			

N:Old ◄Yes/No► New, Q:Old ◄No/Yes► New, R:Old ◄Yes/Yes► New, S:Old ◄No/No► New, W:Add, Z:Discontinued, F:Interchangeable by set, K:Q'ty Change

Copyright (C) YANMAR CO., LTD. All RightsReserved.

Fig.74. COOLING FRESH WATER PUMP & SUB-TANK

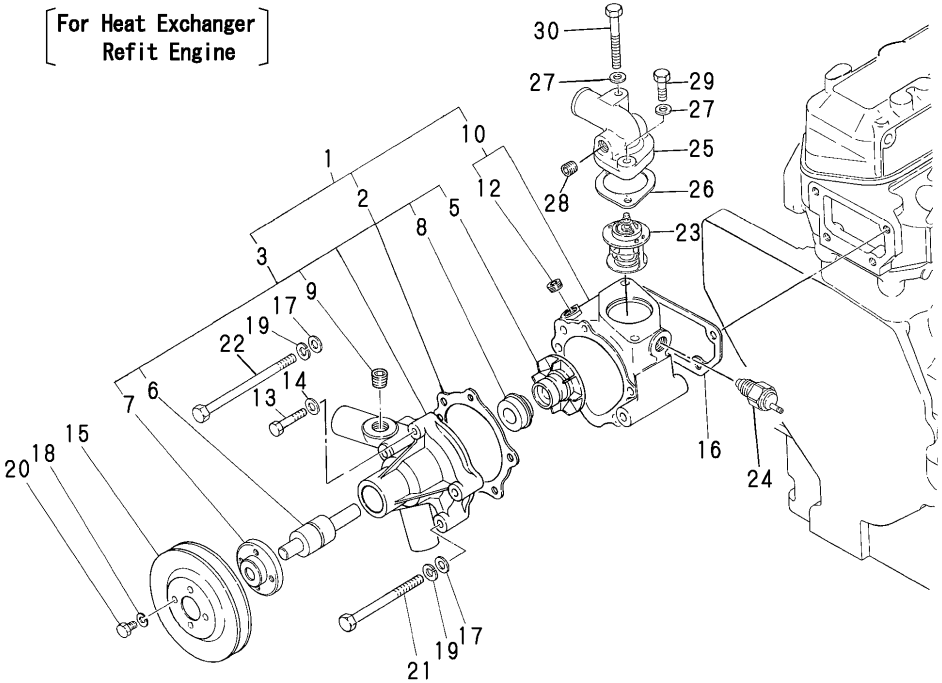

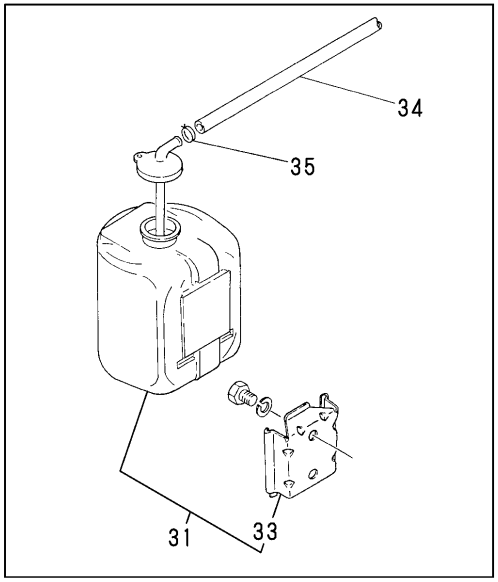

(A)=1GM (B)=2GM (C)=3GM (D)=3GMD (E)=3HM (F)=3HMF

No.	Lev.	Parts No.	Description	Q'ty (A)	(B)	(C)	(D)	(E)	(F)	I	R
1	1	128695-42010	PUMP ASSY, WATER		1	1		1			
2	2	121000-42050	GASKET, WATER PUMP		1	1		1			
3	2	121000-42100	PUMP ASSY, WATER		1	1		1			
5	3	129350-42200	IMPELLER		1	1		1			
6	3	121450-42240	BEARING, SHAFT		1	1		1			
7	3	121450-42260	FLANGE, V-PULLEY		1	1		1			
8	3	121450-42310	SEAL, MECHANICAL		1	1		1			
9	3	23871-030000	PLUG, R03		1	1		1			
10	2	728695-43500	BRACKET ASSY		1	1		1			
12	3	23871-020000	PLUG, R02		1	1		1			
13	2	26117-060352	BOLT M 6X 35		1	1		1			
14	2	22117-060000	WASHER, 6		1	1		1			
15	1	128695-42350	V-PULLEY		1	1		1			
16	1	121450-44410	GASKET		1	1		1			
17	1	22117-080000	WASHER, 8		4	4		4			
18	1	22217-060000	WASHER, SPRING 6		4	4		4			
19	1	22217-080000	WASHER, SPRING 8		4	4		4			
20	1	26116-060102	BOLT, M6X 10 PLATED		4	4		4			
21	1	26116-080952	BOLT, M8X 95 PLATED		4	4		4			
22	1	26116-081152	BOLT, M8X115 PLATED		4	4		4			
23	1	121750-49800	THERMOSTAT		1	1		1			
24	1	127610-91350	SWITCH, 95		1	1		1			
25	1	128690-49530	COVER, THERMOSTAT		1	1		1			
26	1	124736-49540	GASKET		1	1		1			
27	1	22137-080000	WASHER, 8		2	2		2			
28	1	23871-030000	PLUG, R03		1	1		1			
29	1	26116-080282	BOLT, M8X 28 PLATED		1	1		1			
30	1	26116-080652	BOLT, M8X 65 PLATED		1	1		1			
31	1	720445-44200	TANK ASSY, SUB		1	1		1			
33	2	120445-44540	SUPPORT		1	1		1			
34	1	124790-44560	PIPE, WATER L=1000		1	1		1			
35	1	23010-013000	CLAMP, HOSE 13		2	2		2			

N:Old $\frac{\text{Yes}}{\text{No}}$ New, Q:Old $\frac{\text{No}}{\text{Yes}}$ New, R:Old $\frac{\text{Yes}}{\text{Yes}}$ New, S:Old $\frac{\text{No}}{\text{No}}$ New, W:Add, Z:Discontinued, F:Interchangeable by set, K:Q'ty Change

Copyright (C) YANMAR CO., LTD. All RightsReserved.

Fig.75. COOLING FRESH WATER PUMP

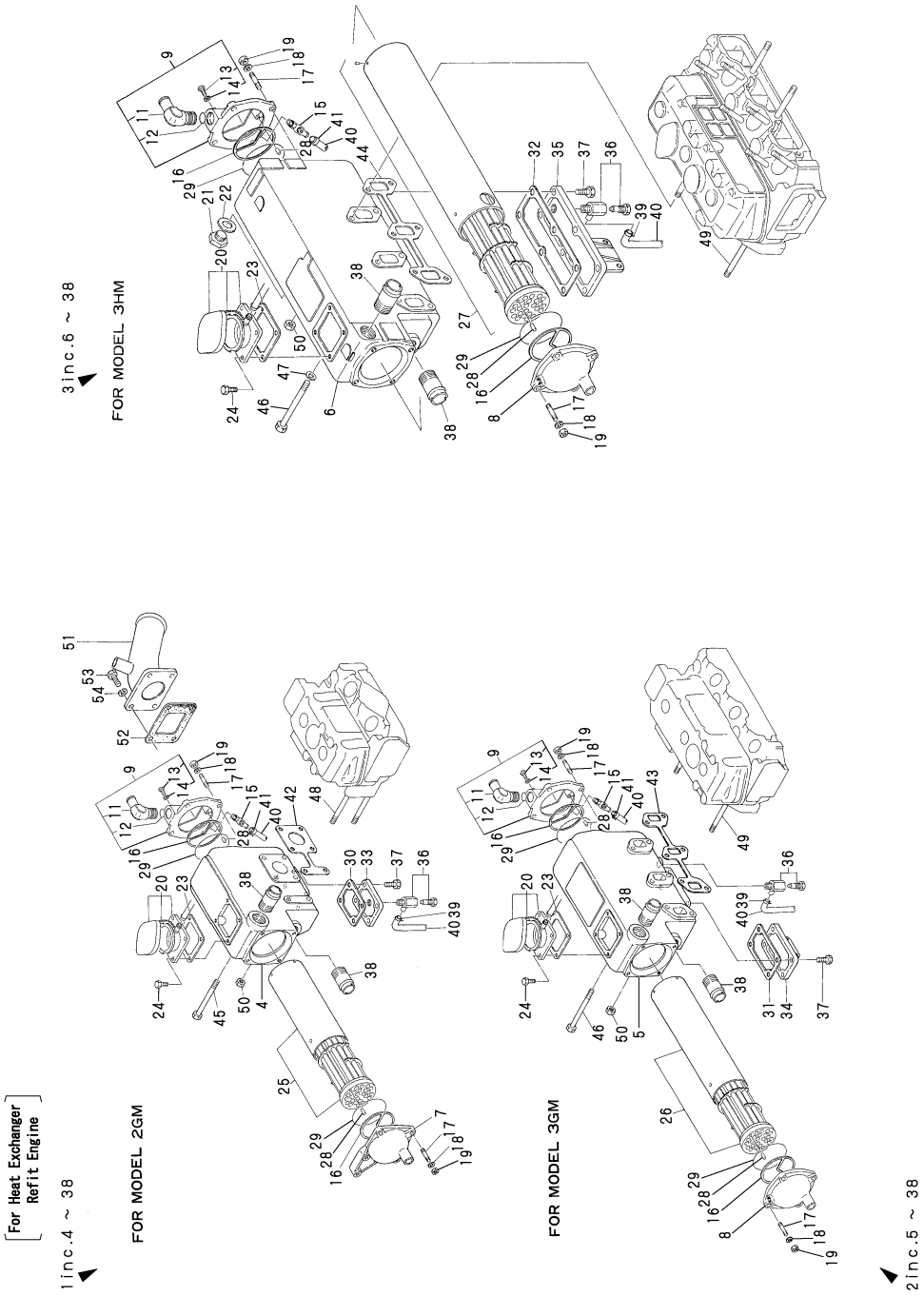

(A)=1GM (B)=2GM (C)=3GM (D)=3GMD (E)=3HM (F)=3HMF

No.	Lev.	Parts No.	Description	Q'ty (A)	(B)	(C)	(D)	(E)	(F)	I	R
1	1	728290-44500	COOLER ASSY, WATER		1						
2	1	728390-44500	COOLER ASSY, WATER			1					
3	1	728695-44501	COOLER ASSY, WATER					1			
4	2	128290-44010	BODY, COOLER		1						
5	2	128390-44010	BODY, TANK			1					
6	2	128695-44010	BODY, TANK					1			
7	2	128290-44050	COVER		1						
8	2	128965-44050	COVER			1		1			
9	2	728690-44710	COVER ASSY		1	1		1			
11	3	128690-49310	ELBOW		1	1		1			
12	3	24311-000160	O-RING, 1AP16.0		1	1		1			
13	3	26554-050102	SCREW, M5X10		1	1		1			
14	3	23414-050000	GASKET, 5X1.0		1	1		1			
15	2	128695-44090	COCK		1	1		1			
16	2	128695-44070	GASKET		2	2		2			
17	2	26216-060202	STUD, M6X 20		8	8		8			
18	2	22117-060000	WASHER, 6		8	8		8			
19	2	26716-060002	NUT, M6		8	8		8			
20	2	123682-44190	FILLER ASSY		1	1		1			
21	2	23897-030002	PLUG PF3/8					1			
22	2	23414-170022	GASKET, 17X1.0					1			
23	2	123672-44200	GASKET		1	1		1			
24	2	26116-060162	BOLT, M6X 16 PLATED		4	4		4			
25	2	128290-44400	PIPE, WATER		1						
26	2	128390-44400	CORE, COOLER			1					
27	2	128695-44400	PIPE ASSY, COOLING					1			
28	2	124790-44470	PIN		2	2		2			
29	2	24311-000700	O-RING, 1AP70.0		2	2		2			
30	2	121450-11680	GASKET		1						
31	2	128390-44490	GASKET			1					
32	2	120345-13160	GASKET, MANIFOLD					1			
33	2	128290-44480	COVER, TANK		1						
34	2	128390-44480	COVER, TANK			1					
35	2	128695-44480	COVER, TANK					1			
36	2	43600-500290	COCK 1/4		1	1		1			
37	2	26116-080202	BOLT, M8X 20 PLATED		4	4		6			
38	2	124160-49480	JOINT, PIPE		2	2		2			
39	1	124460-77680	RETAINER		1	1		1			
40	1	23061-070300	PIPE, 7X 300		2	2		2			
41	1	124722-59050	CLIP, HOSE 9		1	1		1			
42	1	128290-13250	GASKET		1						
43	1	121450-13250	GASKET			1					
44	1	121550-13520	GASKET					1			
45	1	26116-080852	BOLT, M8X 85 PLATED		4						
46	1	26116-080902	BOLT, M8X 90 PLATED			4		4			
47	1	22217-080002	SPRING WASHER 8					4			
48	1	26216-080852	STUD, M8X 85		2						
49	1	26216-080902	STUD, M8X 90			2		2			
50	1	26717-080002	NUT, M8		2	2		2			
51	1	128370-13530	ELBOW		1						
52	1	128370-13200	GASKET		1						

N:Old $\xleftarrow[\text{No}]{\text{Yes}}$ New, Q:Old $\xleftarrow[\text{Yes}]{\text{No}}$ New, R:Old $\xleftarrow[\text{Yes}]{\text{Yes}}$ New, S:Old $\xleftarrow[\text{No}]{\text{No}}$ New, W:Add, Z:Discontinued, F:Interchangeable by set, K:Q'ty Change

++ CONTINUE ++

Copyright (C) YANMAR CO., LTD. All RightsReserved.

Fig.75. COOLING FRESH WATER PUMP

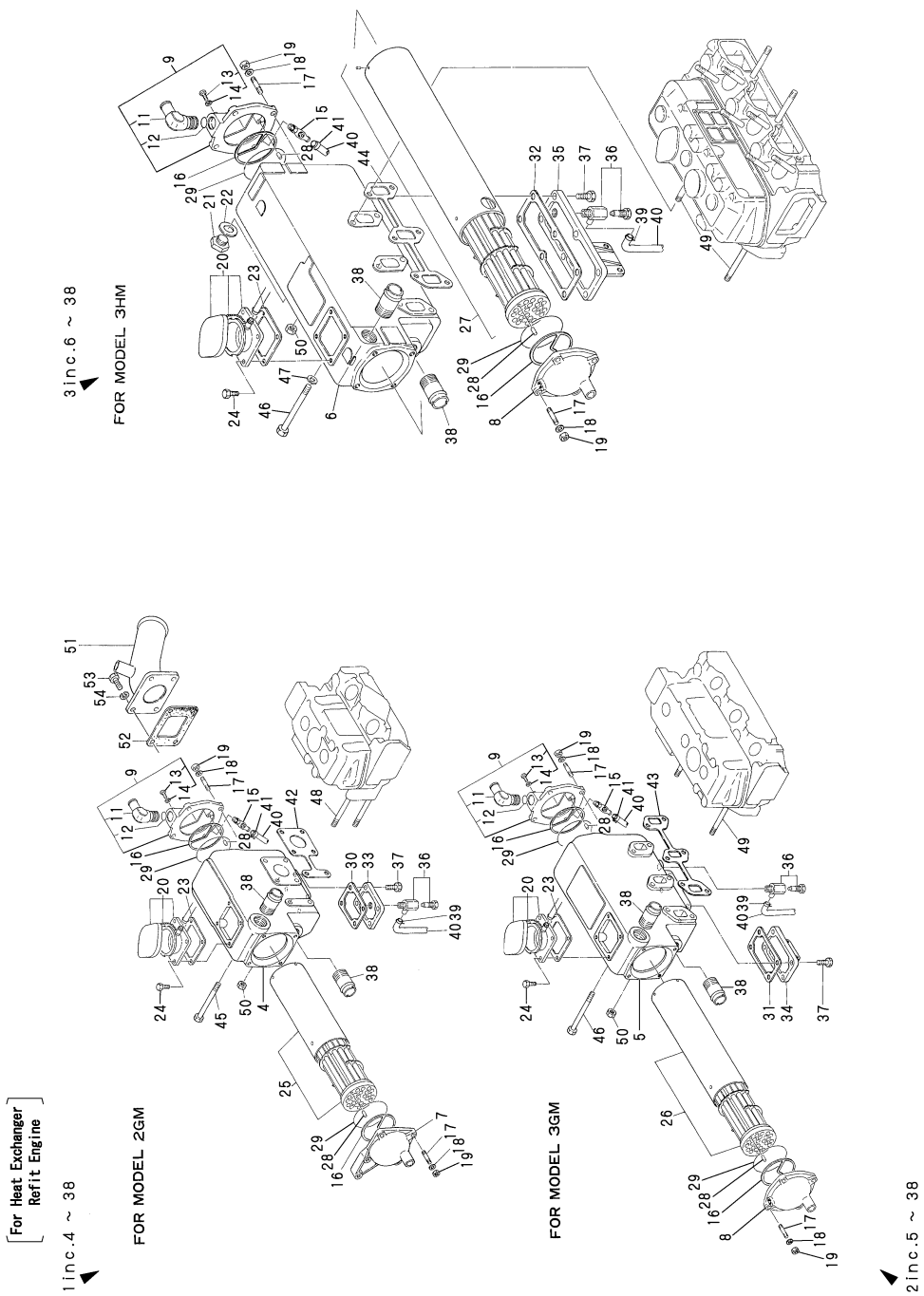

(A)=1GM (B)=2GM (C)=3GM (D)=3GMD (E)=3HM (F)=3HMF

No.	Lev.	Parts No.	Description	Q'ty (A)	(B)	(C)	(D)	(E)	(F)	I	R
53	1	26113-080202	BOLT M8X 20 (STEN		4						
54	1	22217-080000	WASHER, SPRING 8		4						

N:Old $\xleftarrow[\text{No}]{\text{Yes}}$ New, Q:Old $\xleftarrow[\text{Yes}]{\text{No}}$ New, R:Old $\xleftarrow[\text{Yes}]{\text{Yes}}$ New, S:Old $\xleftarrow[\text{No}]{\text{No}}$ New, W:Add, Z:Discontinued, F:Interchangeable by set, K:Q'ty Change

Copyright (C) YANMAR CO., LTD. All RightsReserved.

Fig.76. COOLING WATER PIPE & V-BELT

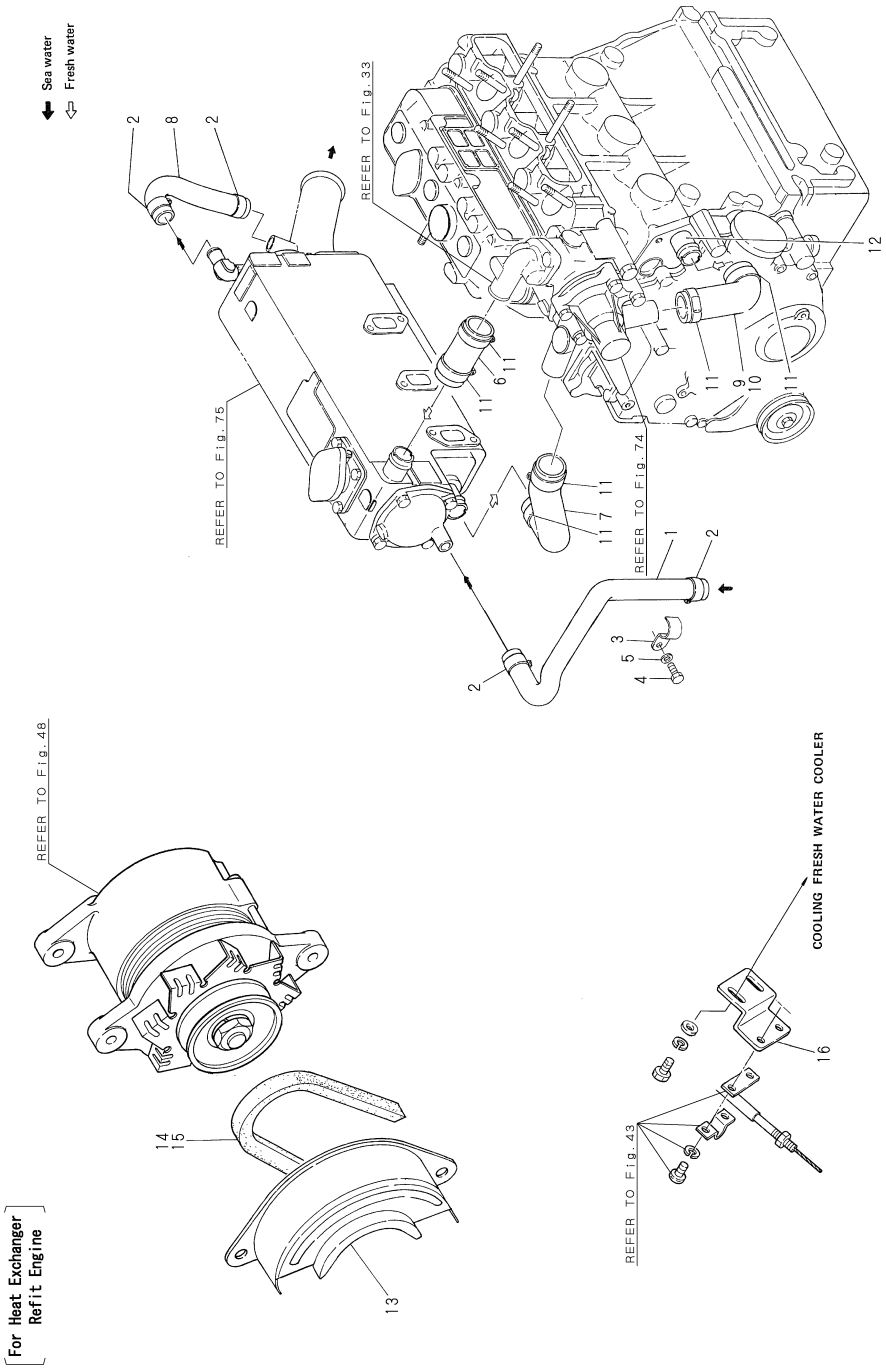

(A)=1GM (B)=2GM (C)=3GM (D)=3GMD (E)=3HM (F)=3HMF

No.	Lev.	Parts No.	Description	Q'ty (A)	(B)	(C)	(D)	(E)	(F)	I	R
1	1	128690-49010	PIPE, WATER		1	1		1			
2	1	23000-025000	CLAMP, 25		4	4		4			
3	1	121575-49310	RETAINER, PIPE		1	1		1			
4	1	26116-060102	BOLT, M6X 10 PLATED		1	1					
5	1	22137-060000	WASHER, 6		1	1					
6	1	128695-49520	PIPE, WATER		1	1		1			
7	1	128295-49530	PIPE, WATER		1	1		1			
8	1	124770-49040	PIPE, WATER		1	1		1			
9	1	128690-49510	PIPE, WATER		1	1					
10	1	128695-49530	PIPE, WATER					1			
11	1	23000-041000	CLAMP, 41		6	6		6			
12	1	124160-49480	JOINT, PIPE		1	1		1			
13	1	128695-77210	COVER, GENERATOR		1	1		1			
14	1	121150-42290	V-BELT		1	1					
15	1	124251-42290	V-BELT, A39					1			
16	1	105311-67100	BRACKET, CABLE		1						

N:Old $\xleftarrow[\text{No}]{\text{Yes}}$ New, Q:Old $\xleftarrow[\text{Yes}]{\text{No}}$ New, R:Old $\xleftarrow[\text{Yes}]{\text{Yes}}$ New, S:Old $\xleftarrow[\text{No}]{\text{No}}$ New, W:Add, Z:Discontinued, F:Interchangeable by set, K:Q'ty Change

Copyright (C) YANMAR CO., LTD. All RightsReserved.

Fig.77. FUEL PIPE

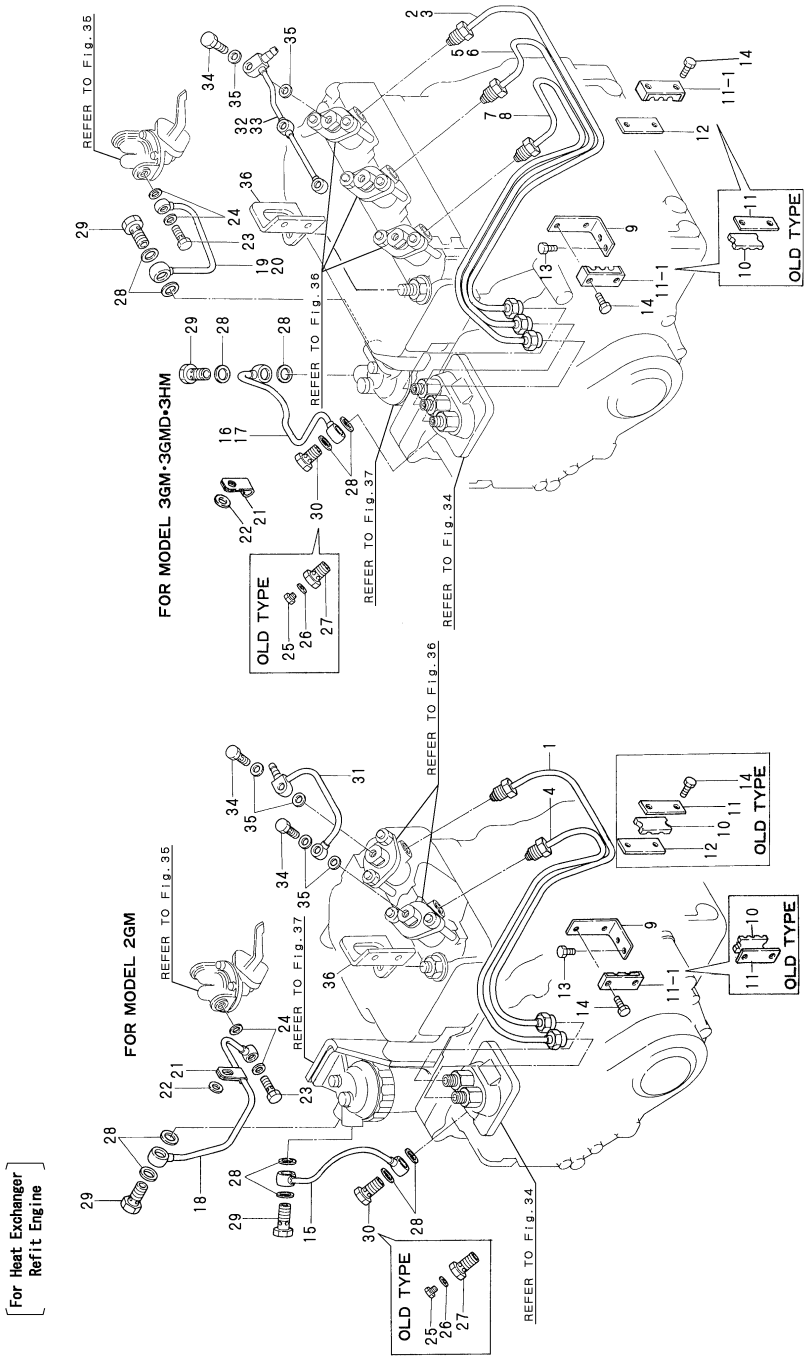

(A)=1GM (B)=2GM (C)=3GM (D)=3GMD (E)=3HM (F)=3HMF

No.	Lev.	Parts No.	Description	Q'ty (A)	(B)	(C)	(D)	(E)	(F)	I	R
1	1	128290-59810	PIPE ASSY, INJECTION		1						
2	1	128390-59810	PIPE ASSY, INJECTION			1					
3	1	128695-59810	PIPE ASSY, INJECTION					1			
4	1	128290-59820	PIPE ASSY, INJECTION		1						
5	1	128390-59820	PIPE ASSY, INJECTION			1					
6	1	128695-59820	PIPE ASSY, INJECTION					1			
7	1	128390-59830	PIPE ASSY, INJECTION			1					
8	1	128695-59830	PIPE ASSY, INJECTION					1			
9	1	121450-59850	BRACKET		1	1		1			
10	1	123325-59100	RETAINER, PIPE		2	2				Z	
			(B=*1980.11) (C=*1980.11)								
11	1	123325-59110	COVER		2	2					
11-1	1	123372-59100	RETAINER, PIPE		1	2		2		R	
			(B=*1980.12) (C=*1980.12)								
12	1	121250-59860	BRACKET		1	1		1			
13	1	26116-060102	BOLT, M6X 10 PLATED		2	2		2			
14	1	26116-060162	BOLT, M6X 16 PLATED		4	4		4			
15	1	128290-59010	PIPE ASSY, FUEL		1						
16	1	128390-59010	PIPE ASSY, FUEL			1					
17	1	128690-59010	PIPE ASSY, FUEL					1			
18	1	128290-59080	PIPE ASSY, FUEL		1						
19	1	128390-59080	PIPE, FUEL			1					
20	1	128690-59080	PIPE					1			
21	1	124450-39240	RETAINER, PIPE		1	1		1			
22	1	22117-080000	WASHER, 8		1	1					
23	1	105582-59150	BOLT, PIPE JOINT		1	1		1			
24	1	23414-080000	GASKET, 8X1.0		2	2		2			
25	1	124060-59380	PLUG, 6		1	1		1		Z	
			(B=EXXX) (C=EXXX)		(E=EXXX)						
26	1	180110-51910	GASKET, PLUG		1	1		1		Z	
			(B=EXXX) (C=EXXX)		(E=EXXX)						
27	1	103854-59200	BOLT, M12		1	1		1		Z	
			(B=EXXX) (C=EXXX)		(E=EXXX)						
28	1	23414-120000	GASKET, 12X1.0		6	6		6			
29	1	23857-060000	BOLT, JOINT 6		2	2		2			
30	1	103854-59191	BOLT ASSY, JOINT M12		1	1		1			
31	1	105311-59500	PIPE ASSY, RETURN		1						
32	1	128370-59500	PIPE ASSY, RETURN			1					
33	1	121575-59500	PIPE ASSY, RETURN					1			
34	1	101147-59810	BOLT, PIPE JOINT M8		2	3		3			
35	1	23414-080000	GASKET, 8X1.0		4	6		6			
36	1	128695-07230	LIFTER		1	1		1			

N:Old $\xleftarrow[\text{No}]{\text{Yes}}$ New, Q:Old $\xleftarrow[\text{Yes}]{\text{No}}$ New, R:Old $\xleftarrow[\text{Yes}]{\text{Yes}}$ New, S:Old $\xleftarrow[\text{No}]{\text{No}}$ New, W:Add, Z:Discontinued, F:Interchangeable by set, K:Q'ty Change

Copyright (C) YANMAR CO., LTD. All RightsReserved.

Parts No. Index

Parts No.	Fig. No.	Ref. No.
101104-92180	63	5
101147-11490	11	100
101147-11900	11	75
101147-59810	25	6
	38	43
	77	34
101158-03061	8	16
101158-03111	8	17
101158-11230	11	82
		87
		92
101200-92140	63	4
101720-55750	37	7
103854-11490	11	101
103854-39140	25	15
103854-51251	34	28
103854-51660	34	35
103854-53120	36	9
103854-53180	36	12
103854-59191	38	45
	77	30
103854-59200	38	36
	77	27
104104-03750	12	9
104200-02110	6	16
104200-03600	12	11
104200-03641	12	13
104200-11180	11	21
104200-11920	14	14
104200-14200	17	16
104200-22300	19	16
104200-53080	36	6
104200-92350	55	6
104211-11100	11	11
104211-11110	11	13
104211-11180	11	22
104211-11370	11	26
104211-21600	18	36
104211-42050	26	14
104211-42070	26	8
	64	30
104211-42080	26	35
104211-42090	26	38
	65	33
104211-42100	26	24
104211-42110	26	27
104211-42120	26	41
104211-42130	26	43
	39	30
104211-49060	14	11

Parts No.	Fig. No.	Ref. No.
104211-49080	57	8
104211-49160	1	30
	33	10
	65	36
104211-53120	36	8
		9 -1
104214-13580	16	7
104214-83980	59	10
104264-39700	57	1
104264-39710	57	2
104264-59030	38	39
104271-01950	3	36
104271-49060	33	16
104271-51450	34	39
104271-51460	34	43
104271-67550	42	17
104271-91351	61	18
104500-55710	37	3
	64	37
104511-78780	26	54
	64	38
	73	24
104884-59170	25	11
105025-01220	1	11
105225-01900	1	16
	2	16
105225-02020	6	7
	7	9
	65	17
105225-02300	6	14
	7	21
105225-11100	11	10
105225-11110	11	12
105225-11350	11	28
105225-14400	17	17
105225-22300	19	15
105225-22400	19	17
105225-23100	20	5
105225-23200	20	7
105225-35290	23	23
105225-35300	24	1
105311-01090	1	6
	2	6
105311-23380	20	11
105311-59500	38	40
	77	31
105311-67100	43	3
	76	16
105311-67200	43	6
105425-01250	1	13

Parts No.	Fig. No.	Ref. No.
105430-01690	5	7
	23	15
105430-11160	11	15
		18
105430-14200	17	15
105430-35010	23	1
105582-34040	24	6
105582-39140	25	17
105582-49090	1	37
105582-49200	33	1
	64	32
105582-52010	35	1
105582-59150	35	6
	38	32
	77	23
105583-49910	1	49
	2	29
	26	49
110250-53150	36	11
110250-55610	37	5
113200-53110	36	7
113200-53120	36	10
120345-13160	29	24
	75	32
120445-44540	30	3
	74	33
121000-01850	3	32
121000-03020	8	2
121000-03070	8	5
	65	20
121000-03080	8	18
121000-03200	8	15
121000-11050	11	35
		36
121000-11420	11	94
121000-14110	17	6
121000-14550	17	4
		7
121000-21500	18	37
121000-22090	19	1
121000-42050	27	2
	65	50
	74	2
121000-42100	27	3
	74	3
121000-61600	39	10
121000-66090	40	7
121023-01550	3	28 -2
121150-35100	23	11
121150-42290	47	8

Parts No.	Fig. No.	Ref. No.
121150-42290	76	14
121150-51460	34	42
121250-01710	11	64
121250-02070	7	20
		30
121250-11550	11	51
	13	24
121250-35320	24	7
121250-35330	24	9
121250-35340	24	10
121250-59860	38	16
		17
	77	12
121250-77210	47	2
121256-52020	35	2
121370-35080	23	12
121370-49040	31	6 -1
	32	4 -1
121370-55730	37	4
121370-77020	44	2
	46	1
121370-77200	47	1
	48	1
121400-01850	35	3
121450-01100	1	7
	2	7
121450-01203	1	8
	2	9
121450-01210	1	10
	2	11
121450-01220	1	12
	2	12
121450-01231	1	14
	2	13
121450-01560	3	7 -1
121450-01751	5	13
	65	15
121450-01800	3	23
121450-01801	3	23 -1
121450-01951	3	38
121450-01960	1	33
	2	25
121450-01980	1	34
	2	26
121450-01990	1	18
	2	18
121450-02071	6	13
	7	19
		29
121450-02100	1	35

Parts No. Index

Parts No.	Fig. No.	Ref. No.
121450-02100	2	27
	6	17
	7	31
121450-02110	6	5
	7	5
121450-02160	6	12
	7	17
121450-02170	7	27
121450-02310	6	20
	7	39
121450-02320	6	18
	7	33
121450-02370	6	19
	7	35
121450-02380	7	37
121450-03071	8	6
	65	21
121450-03610	12	12 -1
121450-11240	11	69
121450-11260	11	66
121450-11270	11	67
121450-11310	12	26
	65	25
121450-11670	11	61
121450-11680	11	40
	28	24
	65	22
	75	30
121450-13250	14	17
	28	36
	64	12
	75	43
121450-14400	17	18
121450-21540	18	16
121450-32021	21	25
	65	30
121450-32050	21	24
121450-32091	21	16
121450-35090	23	3
121450-42240	27	6
	74	6
121450-42260	27	7
	74	7
121450-42310	27	8
	74	8
121450-44410	27	16
	33	5
	65	35
	74	16
121450-51010	34	8

Parts No.	Fig. No.	Ref. No.
121450-51500	34	31
121450-59850	38	13
	77	9
121462-03740	12	10 -1
121520-01850	35	3 -1
	65	39
121520-02100	7	32
121550-02100	2	28
121550-02110	7	6
121550-02300	7	22
121550-02310	7	40
121550-02320	7	34
121550-03760	12	33
121550-11240	11	70
121550-11280	11	71
121550-11290	11	72
121550-11310	12	27 -1
	65	26 -1
121550-11411	11	97
121550-11451	11	99
121550-12710	13	22
121550-13520	14	18
	29	35
	64	13
	75	44
121550-14400	17	19
121550-23200	20	8
121550-23380	20	12
121550-59810	38	4
121550-59820	38	8
121550-59830	38	11
121551-02220	7	8 -1
121551-12710	13	22 -1
121574-01600	4	2
121574-01630	4	6
121574-21500	18	38
121574-86320	43	21
	54	5
121575-01100	2	8
121575-01200	2	10
121575-01331	2	38
121575-01332	2	38 -1
121575-01333	2	38 -2
	64	11
	65	9
121575-01510	3	13
	65	11
121575-01750	5	14
	65	16
121575-01860	3	33

Parts No.	Fig. No.	Ref. No.
121575-01860	65	12
121575-03770	12	34
121575-07230	9	2
121575-07240	9	3
121575-11121	11	14
121575-11421	11	95
121575-11670	11	38
121575-12700	13	19
121575-14090	17	11
121575-22090	19	2
121575-32090	21	16 -1
121575-34801	22	4
121575-34830	22	6
121575-35090	23	4
121575-39200	25	4
121575-42000	26	3
	73	1
121575-42020	26	12
	73	4
121575-42120	26	42
	73	17
121575-42150	26	36
	73	14
121575-49020	32	3
121575-49100	33	4
121575-49150	33	9
121575-49160	33	11
	65	37
121575-49300	26	51
	73	19
121575-49310	32	8
		11
	76	3
121575-51100	34	11
121575-59500	38	42
	77	33
121575-61160	39	33
121575-61620	39	25
121575-61710	39	11
121575-61720	39	12
121575-66051	40	1
121575-66200	40	5 -1
121575-66310	39	23
121575-66510	42	2
121575-66550	42	7
121575-66580	42	9
121575-66800	41	11
		15
121575-66830	41	11 -1
121575-66850	41	17

Parts No.	Fig. No.	Ref. No.
121575-67580	43	20
121750-01920	1	26
	2	23
121750-49800	33	21
	64	33
	74	23
122410-61650	39	26
122780-09320	11	47 -1
122780-59100	38	15 -1
123210-09310	1	27
	2	24
	11	48
123310-77640	58	8
123325-59100	38	14
	77	10
123325-59110	38	15
	77	11
123372-03150	9	9
123372-59100	38	15 -2
	77	11 -1
123672-44200	28	19
	29	19
	75	23
123682-44190	28	18
	29	16
	75	20
123682-44220	29	18
124000-01750	5	12
	65	14
124000-03200	8	14
124000-11240	11	68
124000-13200	16	15
124000-14090	17	10
124060-01050	1	5
	2	5
	3	11
	23	22
124060-02220	7	8
124060-11800	11	17
124060-11810	11	20
124060-14090	17	9
124060-23100	20	6
124060-32990	1	47
124060-39451	25	5
	64	28
124060-51300	34	13
124060-59380	38	34
	77	25
124070-13300	2	30
	14	12

Parts No. Index

Parts No.	Fig. No.	Ref. No.
124070-13300	16	6
	29	31
	33	17
124070-13520	16	2
124070-14760	17	26
		26 -1
124070-42060	26	11
124070-42400	26	45
	73	8
124070-42410	26	44
124070-42420	26	47
		48
	73	18
124070-49310	31	11 -1
	32	8 -1
124070-59060	58	2
124070-59130	58	3
124070-77950	52	6
124070-91250	61	12
	62	7
124070-91290	61	13
	62	8
124070-91300	61	16
	62	11
124072-81050	53	5
124085-01880	2	20
124085-02220	6	6 -1
	7	7 -1
124085-35300	24	2
124085-51500	34	30
124085-92210	63	6
124085-92250	63	7
124085-92260	63	8
124085-92270	63	10
124085-92400	63	12
124085-92700	63	23
124160-01751	3	30
	12	23
124160-11360	12	31
124160-34844	22	7
	65	31
124160-39140	25	7
124160-49480	1	46
	2	39
	28	31
	29	28
	75	38
	76	12
124220-09320	11	47
124220-51890	34	48

Parts No.	Fig. No.	Ref. No.
124223-42040	26	26
	73	10
124223-42070	26	28
	73	11
124223-42080	26	25
	73	9
124223-42091	26	9
	64	31
	73	3
124223-42110	26	39
	65	34
	73	15
124223-42160	26	22
124223-49050	57	9
124223-49300	14	13
124223-49750	14	16
124223-92800	10	15
124240-01871	1	38
	2	31
124240-01882	1	39
	2	32
	65	5
124240-91450	26	23
124250-03640	42	6
124251-42290	76	15
124323-42100	26	15
	73	5
124450-02220	6	6
	7	7
124450-11320	13	21
124450-35070	23	10
124450-35100	23	17
	64	26
124450-35110	23	19
124450-35330	24	8
124450-35350	24	11
124450-39240	25	12
	38	30
	77	21
124460-77680	1	43
	2	36
	28	32
	29	32
	75	39
124465-77330	47	9
124550-35110	23	18
	64	27
124550-35350	63	3
124550-51320	34	15
124550-51341	34	16

Parts No.	Fig. No.	Ref. No.
124550-51350	34	14
124550-51370	34	17
124550-59820	25	8
124550-66370	41	13 -1
124550-77030	44	3
124722-59050	28	34
	29	34
	75	41
124736-07900	9	8
124736-49540	33	25
	65	38
	74	26
124770-11770	13	15
		18
		20
124770-12500	13	3
124770-12540	13	12
124770-49040	32	14 -1
	76	8
124770-53000	36	4
	64	36
124770-77940	52	5
124772-08340	56	2
		5
124772-59650	35	7
124772-59660	35	8
124772-59670	35	9
124772-81050	53	6
124790-44470	28	22
	29	22
	75	28
124790-44560	30	4
	74	34
124790-55601	37	1
124790-77330	47	10
124950-01951	3	37
124950-11340	11	25
124950-11410	11	96
124950-11450	11	98
124950-21600	18	35
124950-51010	34	6
124950-51170	34	20
124950-51190	34	19
124950-51270	34	12
124950-51450	34	40
124950-51510	34	18
124950-51640	34	32
124950-51650	34	33
124950-51670	34	34
127610-91340	33	2

Parts No.	Fig. No.	Ref. No.
127610-91350	33	22
	74	24
127610-91360	33	23
	64	35
128170-01200	1	9
128170-01330	1	44
128170-01331	1	44 -1
	64	8
	65	6
128170-01510	3	12
	65	10
128170-01600	4	1
128170-01750	5	11
	65	13
128170-01830	3	28
128170-02090	6	15
128170-03020	8	1
128170-03070	8	4
	65	19
128170-03200	8	13
128170-07230	9	1
128170-07850	17	28
128170-08100	10	1
128170-08110	10	4
128170-08120	10	5
128170-08130	10	8
128170-08340	56	3
128170-08350	56	1
128170-09320	1	29
128170-11160	11	18 -1
128170-11290	11	65
128170-11310	12	28
	65	23
128170-11340	11	24
128170-11350	11	27
128170-11860	12	1
128170-12500	13	1
128170-12540	13	10
128170-13200	15	3
	64	14
128170-13530	15	1
128170-14010	17	1
128170-14100	17	12
128170-14150	17	14
		14 -1
128170-21200	18	14
128170-21250	18	17
128170-21590	18	24
128170-21650	18	18
128170-22470	19	19

Parts No. Index

Parts No.	Fig. No.	Ref. No.
128170-32030	21	15
	65	29
128170-32200	21	9
128170-34800	22	1
128170-39010	25	13
128170-39020	25	14
128170-39200	25	1
128170-42000	26	1
128170-42050	26	13
128170-42060	26	10
128170-42070	26	7
	64	29
128170-42080	26	34
128170-42090	26	37
	65	32
128170-42110	26	21
128170-49010	31	1
128170-49040	31	3
128170-49050	31	7
128170-49150	33	8
128170-51010	34	5
128170-51100	34	10
128170-51101	34	10 -1
128170-51300	34	13 -1
128170-51500	34	29
128170-53080	36	5
128170-55610	37	11
128170-59010	38	20
128170-59080	38	25
128170-59810	38	1
128170-61100	39	1
128170-61160	39	32
128170-61620	39	24
128170-66010	40	2
128170-66090	40	6
128170-66200	40	4
128170-66510	42	1
128170-66550	41	1
128170-66580	42	8
128170-66850	41	16
128170-66870	41	12 -1
128170-66880	41	8 -1
128170-66890	41	9 -1
128170-67100	43	1
128170-67580	43	19
128170-76790	17	27
		27 -1
128170-77010	44	1
	45	1
128170-77200	47	1 -1

Parts No.	Fig. No.	Ref. No.
128170-77200	49	1
128170-77201	47	1 -2
	50	1
128170-77250	47	18
128170-77350	47	4
	64	39
128170-77500	52	7
	61	23
	62	17
128170-77920	52	1
128170-77921	52	1 -1
128170-81010	53	1 A
128170-81020	53	1 B
128170-81030	53	1
128170-86300	54	1
128170-86500	60	1
128170-91001	61	1
128170-91010	61	3
128170-91020	61	4
128170-91031	61	5
128170-91100	61	7
128170-91160	61	22
128170-91310	61	17
128170-91810	61	19
	62	14
128170-91820	61	20
	62	15
128170-91830	61	21
	62	16
128270-01330	1	45
128270-01331	1	45 -1
	64	9
	65	7
128270-01450	1	36
	2	40
128270-01720	5	9
128270-01820	3	25
		25 -1
128270-01890	1	23
128270-03610	12	12
128270-03640	12	14
128270-03750	12	10
128270-08340	56	4
128270-09300	1	25
	2	22
128270-11310	12	25
	65	24
128270-12500	13	2
128270-12540	13	11
128270-12700	13	14

Parts No.	Fig. No.	Ref. No.
128270-12730	13	13
128270-13600	16	1
128270-13610	16	13
128270-13620	16	5
128270-14010	17	2
128270-21590	18	25
128270-21591	18	25 -1
128270-21650	18	19
128270-21651	18	19 -1
128270-34800	22	2
128270-35090	23	2
128270-39200	25	2
128270-42000	26	2
128270-42150	26	51 A
	73	21
128270-49010	31	2
		2 -2
128270-49020	31	4
128270-49050	31	8
	32	5
128270-49100	33	3
128270-49110	31	2 -1
128270-49250	16	8
128270-49300	26	50
128270-55610	37	12
128270-59010	38	21
128270-59080	38	26
128270-59810	38	2
128270-59820	38	6
128270-66010	40	3
128270-66200	40	5
128270-66550	41	2
128270-67100	43	2
128270-77200	47	1 -3
	51	1
128270-77920	52	2
128270-77921	52	2 -1
		3 -1
128270-91000	62	1
128270-91001	62	1 -1
128270-91010	62	2
128270-91020	62	3
128270-91030	62	4
128270-91031	62	4 -1
128270-91040	62	5
		5 -1
128270-91230	62	18
128270-91350	62	12
128270-91360	62	13
128275-11410	11	96 -1

Parts No.	Fig. No.	Ref. No.
128275-11490	11	102
128275-11500	11	104
128275-91340	33	2 -1
	64	34
128290-13250	28	35
	75	42
128290-44010	28	3
	75	4
128290-44050	28	5
	75	7
128290-44400	28	20
	75	25
128290-44480	28	26
	75	33
128290-49510	32	16
128290-59010	38	51
	77	15
128290-59080	38	53
	77	18
128290-59810	38	46
	77	1
128290-59820	38	48
	77	4
128295-49530	76	7
128370-01330	2	37
128370-01331	2	37 -1
	64	10
	65	8
128370-01720	5	10
128370-08100	10	2
128370-08120	10	6
128370-08130	10	9
128370-12730	13	16
128370-13160	14	5
128370-13180	14	7
	65	27
128370-13200	15	4
	64	15
	75	52
128370-13530	15	2
	75	51
128370-13600	16	2 -1
128370-13610	16	14
128370-14010	17	3
128370-21590	18	26
128370-21650	18	20
128370-34800	22	3
128370-39200	25	3
128370-49020	31	5
128370-49030	31	6

Parts No. Index

Parts No.	Fig. No.	Ref. No.
128370-49030	32	4
128370-49250	16	9
128370-51010	34	7
		9
128370-59010	38	22
128370-59080	38	27
128370-59500	38	41
	77	32
128370-59650	35	10
128370-59810	38	3
128370-59820	38	7
128370-59830	38	10
128370-81010	53	2
128370-81020	53	2 B
128370-81030	53	2 A
128370-86280	54	6
128370-86300	54	2
128371-21590	18	26 A
		27
128371-81010	53	3
128371-81020	53	3 A
128371-81030	53	3 B
128371-81050	53	5 -1
128390-44010	28	4
	75	5
128390-44400	28	21
	75	26
128390-44480	28	27
	75	34
128390-44490	28	25
	75	31
128390-59010	38	52
	77	16
128390-59080	38	54
	77	19
128390-59810	38	47
	77	2
128390-59820	38	49
	77	5
128390-59830	38	50
	77	7
128670-01450	2	41
128670-01830	3	28 -1
128670-03010	8	3
128670-03020	8	19
128670-03030	8	20
128670-03040	8	21
128670-08100	10	3
128670-08120	10	7
128670-08130	10	10

Parts No.	Fig. No.	Ref. No.
128670-11310	12	27
	65	26
128670-13160	14	6
128670-13180	14	8
	65	28
128670-14010	17	5
128670-21590	18	28
128670-21650	18	21
128670-49010	32	1
128670-59010	38	23
128670-59080	38	28
128670-77350	47	6
	64	41
128670-77920	52	3
128670-81010	53	4
128670-81020	53	4 A
128670-86250	54	13
128670-86300	54	3
128670-91001	61	2
128670-91100	61	8
128670-92260	63	9
128670-92270	63	11
128670-92400	63	13
128690-49010	32	2
	76	1
128690-49250	16	10
128690-49310	28	9
	29	7
	75	11
128690-49510	76	9
128690-49530	33	24
	74	25
128690-59010	38	24
	77	17
128690-59080	38	29
	77	20
128695-01840	3	40
	65	49
128695-07230	9	7
		10
	77	36
128695-11410	11	97 -1
128695-11500	11	105
128695-11670	11	39
128695-21650	18	22
128695-34800	22	5
128695-42010	27	1
	74	1
128695-42350	27	15
	74	15

Parts No.	Fig. No.	Ref. No.
128695-44010	29	2
	75	6
128695-44050	29	3
128695-44070	28	14
	29	12
	75	16
128695-44090	28	13
	29	11
	75	15
128695-44400	29	21
	75	27
128695-44480	29	25
	75	35
128695-44780	47	7
	64	42
128695-49020	32	14
128695-49520	32	12
	76	6
128695-49530	32	13
		15
	76	10
128695-59810	38	5
	77	3
128695-59820	38	9
	77	6
128695-59830	38	12
	77	8
128695-67100	43	4
128695-77210	47	3
	76	13
128696-51100	34	11 -1
128696-51300	34	13 -2
128965-44050	28	6
	75	8
129350-01230	2	14
129350-14100	17	13
129350-21200	18	15
129350-42200	27	5
	74	5
135210-51900	37	9
135210-61090	41	22
138603-59380	58	6
145410-46960	3	24
160110-66011	12	14 -1
170090-02630	66	15
171016-01550	3	28 -3
172100-22400	19	18
172100-53200	36	13
174100-54120	34	26
174307-51170	34	21

Parts No.	Fig. No.	Ref. No.
174307-51181	34	22
174307-51460	34	41
174307-51700	34	27
177070-02011	66	2
177070-02031	66	9
177070-03010	67	6
177070-03020	67	7
177070-03030	67	5
177070-03040	68	2
177070-03070	68	4
177070-03111	68	9
		12
177070-03121	68	10
177070-03130	68	8
177070-03190	68	14
177070-03200	68	16
177070-03230	68	18
177070-03250	68	20
177070-03301	67	9
177070-03501	53	5 -2
177070-03550	68	23
177080-02030	70	16
177088-02011	66	1
177088-02032	66	8
177088-02091	66	3
177088-02350	66	7
177088-02430	66	23
177088-02450	66	12
177088-02950	66	18
177088-02961	66	19
177088-02970	66	20
177088-03011	67	3
177088-03020	67	4
177088-03030	67	2
177088-03071	68	3
177088-03091	68	1
177088-03110	68	6
		11
177088-03120	68	7
177088-03130	68	5
177088-03192	68	13
177088-03201	68	15
177088-03232	68	17
177088-03252	68	19
177088-03272	68	21
177088-03280	68	29
177088-03290	68	28
177088-03301	67	8
177088-03311	67	10
177088-03331	67	11

Parts No. Index

Parts No.	Fig. No.	Ref. No.
177088-03341	67	12
177088-03400	67	1
177088-03520	68	26
177088-03552	68	22
177088-06010	69	3
177088-06020	69	5
177088-06050	69	9
177088-06070	69	10
177088-06090	69	11
177088-06100	69	18
177088-06110	69	17
177088-06120	69	12
177088-06140	69	14
177088-06150	69	15
177088-06160	69	16
177088-06170	69	13
177090-02250	66	11
177090-02620	66	14
	70	40
177090-02630	70	21
177090-03080	72	22
177090-03090	72	23
177090-03110	72	19
177090-03121	72	21
177090-03180	72	13
177090-03230	72	8
177090-03270	72	25
177094-02120	70	15
177095-02400	70	22
177095-02980	70	27
177095-03190	69	4
	72	9
177095-03200	70	36
	72	10
177095-03210	72	14
177095-03280	72	20
177095-03800	72	26
177095-03900	72	27
177095-06030	70	33
177095-06040	69	1
	70	38
177095-06050	70	34
177095-06060	70	37
177095-06140	70	35
177099-02081	70	19
177099-02091	70	20
177099-02130	70	14
177099-02250	70	32
177099-02450	70	23
177099-02950	70	25

Parts No.	Fig. No.	Ref. No.
177099-02960	70	26
177099-03011	71	1
177099-03021	72	1
177099-03040	72	4
177099-03070	72	11
177099-03080	72	12
177099-03101	72	15
177099-03111	72	18
177099-03161	72	24
177099-03301	71	9
177099-03321	71	12
177099-03380	71	2
177099-03390	72	16
177099-03411	71	3
177099-03431	72	17
177099-03470	72	28
177099-03500	53	6 -1
	71	5
177099-03540	72	30
177099-03550	72	29
177099-03901	71	13
177099-03920	71	4
	72	3
177099-03980	71	10
177099-06010	70	28
177099-06041	70	31
177099-06050	70	6
180110-51910	38	35
	77	26
22113-060000	54	8
22117-050000	12	38
22117-060000	3	16
	8	10
	12	22
	13	31
	26	57
	27	14
	28	16
	29	14
	33	15
	42	10
	69	19
	74	14
	75	18
22117-080000	11	45
		54
	13	27
		33
	22	9
	27	17

Parts No.	Fig. No.	Ref. No.
22117-080000	38	31
	40	13
	47	17 -1
	52	9
	53	17
	74	17
	77	22
22117-100000	4	5
	44	5
22117-120000	21	13
22133-100000	70	9
22137-050000	34	38
22137-060000	3	41
	5	19
	12	22 -1
	21	27
	31	13
	32	10
	43	18
	76	5
22137-080000	3	22
	8	11
	11	45 -1
		53
	13	26
	23	25
	33	26
	43	25
	47	12
		17
	74	27
22137-100000	11	31
22137-140000	56	6
22212-080000	3	9 -2
22217-040000	8	24
22217-050000	8	25
	34	37
	43	13
		14
	54	10
	61	11
		15
	62	10
22217-060000	1	32
	3	35
	5	18
	13	30
	23	14
	26	56
	27	18

Parts No.	Fig. No.	Ref. No.
22217-060000	35	5
	37	18
	39	29
	41	20
	42	11
	43	16
		24
	54	12
		15
	74	18
22217-080000	6	9
	7	12
	8	12
	9	5
	11	44
		57
		58
	14	10
		21
	15	7
	16	19
	26	53
		60
	27	19
	29	37
	33	14
	37	15
	44	9
	47	14
		21
	53	8
		12
		13
	71	7
	73	23
		25
	74	19
	75	54
22217-080002	75	47
22217-100000	10	14
	47	20
22217-120000	10	12
22217-140000	56	7
22242-000100	26	29
	39	31
	43	10
22242-000120	40	15
22242-000140	11	73
22242-000150	26	30
	73	12

Parts No. Index

Parts No.	Fig. No.	Ref. No.
22252-000100	24	12
22252-000260	26	31
22252-000300	26	32
22252-000350	26	33
	73	13
22287-080000	12	35
	66	6
	70	5
22287-100000	70	18
22312-030180	12	15
22312-030220	12	16
22312-080160	1	17
	2	17
	18	11
22315-040010	3	10
22322-030160	12	18
	42	12
22322-030200	39	19
22351-030012	39	22
22351-040008	1	20
	11	34
	21	10
	33	18
	39	9
		27
22351-040010	11	34 -1
22414-160100	54	7
22414-250150	43	11
22417-250150	69	21
22451-100000	41	21
22487-060160	54	16
22512-050340	17	20
22512-070120	18	12
22512-070180	18	13
22512-070300	17	21
22522-030100	21	11
22714-580250	57	13
22724-800380	57	15
	58	9
22724-800400	57	16
23000-022000	16	11
	31	9
	32	6
	57	10
23000-025000	16	12
	31	10
	32	7
	57	11
	76	2
23000-041000	32	17

Parts No.	Fig. No.	Ref. No.
23000-041000	76	11
23010-012000	57	3
23010-013000	30	5
	74	35
23010-014000	58	7
23061-070200	1	42
	2	35
23061-070300	28	33
	29	33
	75	40
23061-081000	57	4
23061-100300	14	15 -1
23061-100500	14	15
23080-013000	8	26
23297-200061	31	11
23414-050000	28	12
	29	10
	75	14
23414-080000	1	41
		48
	2	34
	3	9 -1
	25	9
		11 -1
	35	11
	38	33
		44
	65	40
	77	24
		35
23414-080012	37	10
23414-100000	25	10
	65	41
	66	22
	69	8
23414-120000	25	16
	38	37
	65	42
	77	28
23414-130000	5	6
23414-160021	66	13
	70	13
		24
23414-170022	29	30
	75	22
23414-250000	11	49
	65	43
23418-060000	37	8
23857-060000	38	38
	77	29

Parts No.	Fig. No.	Ref. No.
23871-020000	27	12
	74	12
23871-030000	27	9
	33	27
	74	9
		28
23873-010000	29	4
23873-020000	1	21
23873-030000	11	37
23883-100002	66	21
	69	7
23883-160002	70	12
23883-180002	4	7
23887-180002	4	7 -1
23893-020002	5	5
23894-020002	5	5 -1
23897-030002	29	29
	75	21
24101-060004	26	18
24101-060054	3	26
	17	22
24101-062054	17	23
24101-063050	3	27 -1
24101-063054	3	27
24107-062004	26	19
24107-062024	26	20
	73	7
24141-302050	68	27
24190-080001	12	19
		20
	18	10 -2
24190-100001	24	5
24311-000070	12	17
	42	13
24311-000090	40	14
24311-000100	1	15
	2	15
	65	44
24311-000120	12	32
24311-000160	28	10
	29	8
	65	51
	75	12
24311-000180	68	24
24311-000210	68	25
24311-000700	28	23
	29	23
	65	52
	75	29
24321-000350	3	31

Parts No.	Fig. No.	Ref. No.
24321-000350	12	24
	26	58
	65	45
24341-000120	67	13
24341-000150	71	11
24341-000260	11	103
24341-000300	72	2
24341-000440	37	6
24341-000600	66	4
24341-001350	7	10
	65	18
25132-003000	47	5
	64	40
26013-040122	46	23 -1
26013-060322	45	20
26031-040122	45	19
26113-080202	15	5
		6
	75	53
26113-080402	16	20
26113-080602	16	21
26116-050128	42	15
26116-060102	13	28
	27	20
	32	9
	38	18
	43	22
	74	20
	76	4
	77	13
26116-060122	3	29 -2
	31	12
	43	15 -1
		26
26116-060142	1	31
	3	34
		34 -1
	13	29
	23	13
	41	19
	43	15
	54	11
26116-060162	3	39
	28	28
	29	20
	35	4
	38	19
		19 -1
	75	24
	77	14

Parts No. Index

Parts No.	Fig. No.	Ref. No.
26116-060182	37	16
26116-060202	5	15
	8	7
	26	55
	33	12
26116-060222	21	26
26116-060252	5	16
	8	8
	37	17
26116-060302	39	28
26116-060352	5	17
26116-060502	3	14
26116-060802	3	15
26116-080122	11	63
26116-080142	1	40
	2	33
	8	9
	9	4
	26	52
	43	23
	53	7
	71	6
	73	22
26116-080162	37	14
	52	8
26116-080202	6	8
	7	11
	11	41
	13	32
	28	30
	29	27
	33	13
	37	13
	47	13
	66	5
	75	37
26116-080222	11	43
26116-080252	11	42
	14	9
	22	8
	53	9
	66	10
	69	2
	70	39
26116-080282	11	62
	33	19
	53	11
	74	29
26116-080302	3	18
	47	11

Parts No.	Fig. No.	Ref. No.
26116-080302	53	10
		18
26116-080322	47	11 -1
26116-080352	23	24
26116-080502	33	7
26116-080602	33	6
26116-080652	33	20
	74	30
26116-080852	3	17
	28	37
	75	45
26116-080902	28	38
	29	36
	75	46
26116-080952	3	19
	27	21
	74	21
26116-081152	3	20
	27	22
	74	22
26116-081202	3	21
	47	15
26116-100252	4	3
26116-100302	4	4
	10	13
	44	4
	70	17
26116-100322	59	8
		12
26116-100602	47	19
26116-120302	10	11
26117-060352	27	13
	74	13
26213-080182	11	59
	15	8
		8 -1
26213-080222	16	16
26213-080702	16	17
26213-080802	11	55
	14	19
26216-060202	28	15
	29	13
	75	17
26216-080222	3	7
26216-080552	11	50
	13	23
26216-080622	11	32
26216-080652	11	32 -1
26216-080702	11	32 -2
26216-080852	28	39

Parts No.	Fig. No.	Ref. No.
26216-080852	75	48
26216-080902	28	40
	29	38
	75	49
26223-100222	70	7
26226-080182	53	14
26226-080222	53	15
26226-120252	44	6
26286-080222	70	3
26347-080002	26	46
	73	20
26450-050102	17	25
		25 -1
26450-060182	21	14
26450-080282	59	11
26554-040062	26	16
26554-040082	26	40
	73	16
26554-040102	26	17
	73	6
26554-050102	28	11
	29	9
	75	13
26557-040082	8	22
26557-040122	46	23
	48	22
	49	19
	50	19
	51	19
26557-050102	8	23
	43	12 -1
	48	28
26557-050122	12	36
	43	12
	54	9
26557-050142	49	15
	50	15
	51	14
26557-050162	48	18
26557-050362	48	14
26557-060102	3	29
26587-050102	34	36 -1
26587-050122	34	36
26587-080102	17	24 -1
26587-080122	17	24
26656-080002	12	29
26657-120002	41	8
26666-060002	41	12
26713-080002	11	56
		60

Parts No.	Fig. No.	Ref. No.
26713-080002	14	20
	15	9
		9 -1
	16	18
26713-100002	70	8
26716-050002	61	10
		14
	62	9
26716-060002	12	21
	28	17
	29	15
	42	14
	43	17
	54	14
	75	19
26716-080002	3	8
	11	33
		52
	13	25
	28	41
	29	39
	40	12
	44	8
	47	16
	53	16
	70	4
26716-100002	59	9
		13
26716-120002	44	7
26716-160002	63	22
26717-080002	75	50
26736-100002	11	29
26736-140002	56	8
26756-050002	12	37
	42	16
26756-060002	41	13
		13 -2
		18
	69	20
26756-080002	11	83
		88
		93
	44	8 -1
26756-120002	41	9
		9 -2
26757-080002	59	7
26776-100002	11	30
26776-120002	9	6
	21	12
26776-180002	18	23

Parts No. Index

Parts No.	Fig. No.	Ref. No.
26911-100102	69	6
26921-080102	11	74
27210-200200	1	28
	64	7
27210-200300	1	24
	2	21
	11	46
	64	6
27221-060100	18	10
27221-060140	18	10 -1
27233-250000	16	4
27243-200000	1	19
27310-070000	11	23
27310-070001	11	23 -1
28110-100130	55	3
28110-170190	55	4
28110-220240	55	5
28110-270300	63	24
28116-060162	3	29 -1
28150-040000	63	25
28150-050000	63	26
28210-000031	63	27
28210-000070	63	28
28210-000150	55	7
28312-150750	63	29
41710-000380	60	3
41710-000410	43	5
	54	4
41730-000680	60	2
43400-500390	41	14
	65	46
43400-500410	3	9
	12	30
43400-500450	41	10
	65	47
43400-500570	5	8
	23	16
	65	48
43600-500011	57	12
43600-500290	1	22
	2	19
	28	29
	29	26
	75	36
43662-010030	57	6
43662-015020	57	7
43666-020951	57	14
46150-001110	61	6
	62	6
		6 -1

Parts No.	Fig. No.	Ref. No.
46150-003680	52	4
	64	43
48110-025062	59	1
48110-025063	59	2
48110-028063	59	5
48110-032411	59	6
48110-032502	59	4
48110-522361	59	3
704507-92100	55	1
705311-23100	20	1
705311-23600	20	9
711100-51540	34	25
720445-44200	30	1
	74	31
721000-21700	18	3
		3 A
721000-21701	18	3 A-1
721000-22500	19	5
	64	16
721450-02500	6	2
	7	1
721450-02611	6	10
	7	13
721450-02621	7	23
721450-11650	11	84
721450-11660	11	89
721500-21700	18	4
721500-61560	39	14
721550-02500	7	2
721550-02610	7	14
721550-02620	7	24
721550-02800	7	18
721550-02810	7	28
721550-02820	7	38
721550-02830	7	36
721550-23100	20	2
721550-23600	20	10
721575-01540	5	2
721575-11701	11	4
		5
721575-22500	19	6
	64	17
721575-51700	34	4
721575-61520	39	2
724000-21700	18	2
724000-21701	18	2 -1
724060-53101	36	2
724085-11650	11	77
724550-51520	34	23
728170-01540	5	1

Parts No.	Fig. No.	Ref. No.
728170-01560	1	1
728170-01610	3	1
728170-02500	6	1
728170-11650	11	76
728170-11700	11	1
728170-21700	18	1
728170-22540	19	21
728170-32100	21	1
728170-32500	21	3
728170-35800	23	20
728170-51101	34	1 -1
728170-51700	34	1
728170-53100	36	1
728170-61560	39	13
728170-92500	64	1
728170-92600	65	1
728270-01560	1	2
728270-01610	3	2
728270-11520	12	2
728270-11700	11	2
728270-51101	34	2 -1
728270-51700	34	2
728270-92400	63	1
728270-92500	64	2
728270-92600	65	2
728290-44500	28	1
	75	1
728370-01560	2	1
728370-01610	3	3
728370-11520	12	3
728370-11700	11	3
728370-13500	14	1
728370-51101	34	3 -1
728370-51700	34	3
728370-92500	64	3
728370-92600	65	3
728390-44500	28	2
	75	2
728670-01560	2	2
728670-01561	2	2 -1
728670-11520	12	4
728670-11521	12	4 -1
728670-13500	14	2
728670-14581	17	5 -1
728670-92400	63	2
728670-92500	64	4
728670-92600	65	4
728690-44710	28	7
	29	5
	75	9

Parts No.	Fig. No.	Ref. No.
728690-92500	64	5
728695-43500	27	10
	74	10
728695-44500	29	1
728695-44501	29	1 -1
	75	3
728696-51100	34	4 -1
777099-02550	70	1
777099-03021	71	8
83213-003012	58	1
97778-200121	57	5
X211413005	45	11
X211415006	45	14
X21142215	46	6
X21143215	45	6
X211433101	45	8
X21144454	45	13
X21144661	45	16
X211447009	45	18
X211451005	45	2
X21145312	45	7
X21145314	45	10
X21145352	45	12
X21145866	46	22
X211462101	45	5
X21146963	45	22
X21147155	45	4
X211476503	45	15
X21148110	45	3
X21148313	45	9
X21148852	45	21
X21149652	45	17
X21201110	46	4
X21201115	46	3
X21201313	46	10
X21201605	46	19
X21202601	46	17
X21202602	46	18
X21204259	46	5
X21204302	46	12
X21204401	46	14
X212045001	46	15
X21204810	46	21
X21205310	46	8
X21205400	46	13
X21205650	46	16
X21207100	46	2
X21207312	46	9
X212077002	46	20
X21209311	46	7

Parts No. Index

Parts No.	Fig. No.	Ref. No.
X22501300	46	11
X6201SD	48	3
	49	3
	50	3
	51	3
X6302BM	48	21
	49	18
	50	18
	51	18
XB444001A	48	27
XB495469B	49	23
	50	23
	51	15
XL12013262	49	10
	50	10
	51	10
XL1202310	49	14
XL1203310	50	14
XL1208326	49	9
XL1254801	49	21
	50	21
	51	21
XL1255801	49	22
	50	22
	51	22
XL13513003	50	5
XL13513134	49	13
	50	13
	51	13
XL13513152	51	8
XL1351318	49	11
	50	11
XL13514042	49	17
	50	17
	51	17
XL13523001	49	5
XL13523003	51	5
XL1352318	51	11
XL13525001	49	20
	50	20
	51	20
XL13533151	49	8
XL13533152	50	8
XL1353320	49	7
	50	7
	51	7
XL13542001	51	4
XL1354326	50	9
	51	9
XL13561001	49	2

Parts No.	Fig. No.	Ref. No.
XL13561001	50	2
	51	2
XL1356200	49	4
	50	4
XL1358301	49	6
	50	6
	51	6
XL1359400	49	16
	50	16
	51	16
XL135Y1200	48	4
XL135Y1300	48	5
XL135Y13001	48	6
XL135Y1302	48	7
XL135Y1303	48	8
XL135Y1310	48	9
XL135Y1311	48	10
XL135Y1320	48	11
XL135Y1400	48	19
XL135Y1401	48	20
XL135Y1531	48	23
XL135Y1801	48	24
XL135Y1802	48	25
XL135Y1803	48	13
XL135Y1810	48	15
XL135Y1820	48	26
XLR135Y110	48	2
XMV11305	48	16
XMV11306	48	17
XTR1Z28	48	12
XTR1Z49	49	12
XTR1Z63	51	12
XTR1Z69	50	12

Parts No.	Fig. No.	Ref. No.

Parts No.	Fig. No.	Ref. No.