Engine Mini-17 v5

VERSION 2017-11

SPARE PARTS MANUAL

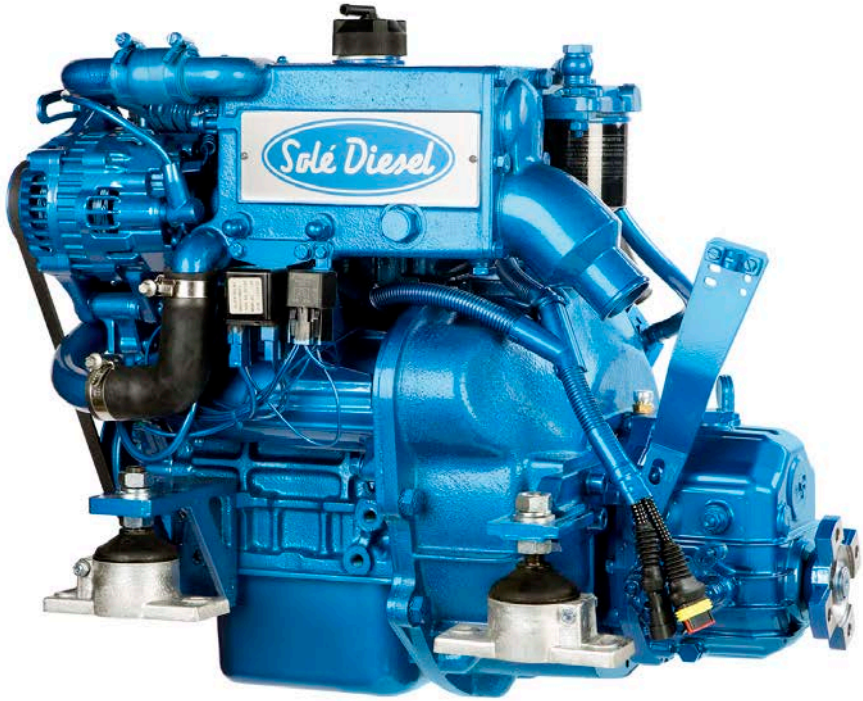

PARTS LIST CATALOGUE

NORMS TO PLACE AN ORDER:

For fast and more efficient service, please specify the following information on spare parts orders that must be preferably done by FAX or e-mail as specified below:

1- Engine model: As shown in identification plate

2- Engine serial number: As shown in identification plate and stamped on crankcase

3- Item description + part number + quantity required

Spare parts requests must be adressed to:

recambios@solediesel.com

Telf.: +34 93 775 44 05

Fax: +34 93 775 30 13

The components shown in the catalog have:

- Figure: Number by which they are represented in scheme
- Description: Trade name of the component
- Quantity: Total number of parts used in the assembly of the part represented (may differ from the total minimum quantities)

Hoses, indicates the total length in meters

The diagrams shown in this catalog of spare parts, have only the purpose to identify the piece in question, its representation is not meaningful and may differ from the actual piece.

In case of doubt, contact Solé Diesel, or your authorized dealer.

The parts i / or references in this catalog are subject to change without notice.

SOLÉ, S.A.

C-243b, Km, 2 - P.O. BOX 15

08760 Martorell (Barcelona) Spain

Download the latest version of this manual HERE

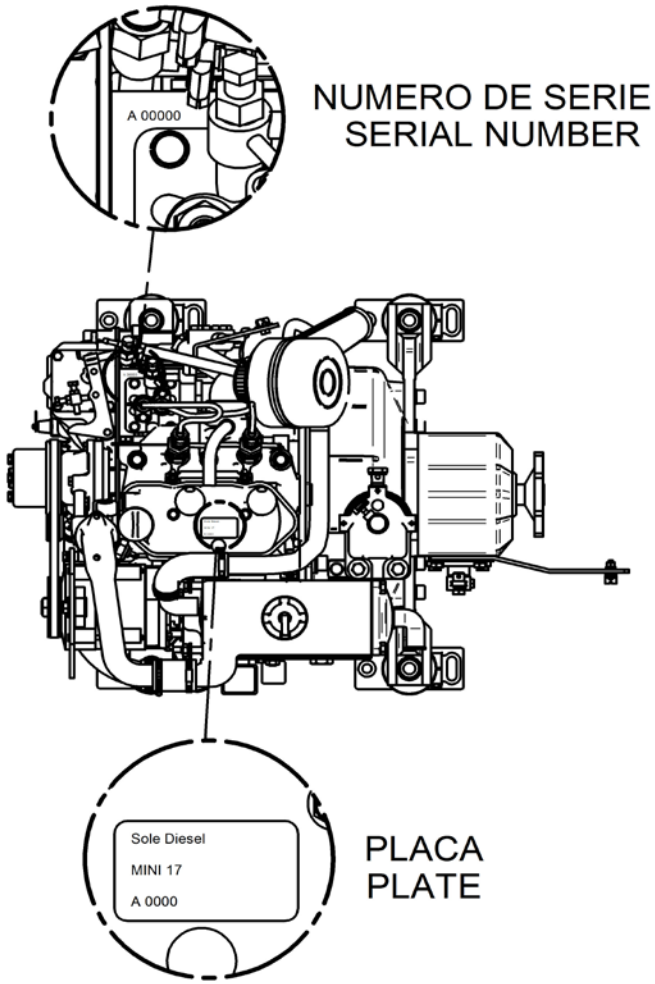

Contents

Engine Body
Cylinder Head
Rocker Cover & Breather
Valve Drive
Timing Parts
Gear Case
Cranckcase
Rear Plate
Piston & Connectiong Rod
Crankshaft & Flywheel
Oil System
Oil Pan
Engine Brackets

Inlet & Exhaust
Inlet

Cooling System
Water Pump
Cooler Pipes
Cooler For MINI-17, Complete
Cooler For MINI-17, CompletE
Cooler For MINI-17, Complete
1/2" Pump Water, Set
1/2" Pump Water, Set

Fuel System
Fuel Pipe
Injection Nozzle
Fuel Injection Pump
Governor Parts
Fuel Supply Parts

Electrical System
Kit Alternator 14V/75A ISKRA
Starter Assy
Electrical Wiring
Deluxe Instrument Panel
SVT 20 MINI-17/29 Panel
SVT 30 MINI-17/29 Panel

Maintenance Kit
Pipe Rubber Set,water line 4 V.
Kit Gasket
Repair Kit Water Pump 1/2"

Kit Gearbox
Kit GearBox RONIM-5
Kit S-Drive VOLVO 120BS/120SC
Kit S-Drive VOLVO 120S
Kit S-Drive VOLVO 100S
Kit S-Drive SD20 YANMAR
Kit S-Drive VOLVO 130S
Kit GearBox VOLVO MS-2 & MS-2B
Kit GearBox TMC-40P 4/5 V.
Kit S-Drive VOLVO 110S
Kit S-Drive BUKH DV10 & DV20
Kit Bobtail SAE-7
Kit Bobtail
Kit GearBox TMC-60 MINI-17
Kit S-Drive SELVA
Kit GearBox TMC/ZF/PRM
Kit S-Drive TECHNO.SP60
Kit GearBox ZF 15 MIV 4 V.

Instruments Panels
Price Supplement Panel TE3 MINI-17/29
Kit 2nd Panel TE4 MINI-17/29 12V

Electrical System
Kit 2nd Alternator 28V/55A
Kit 2nd Alternator 14V/90A
Kit Wire Earth Isolated Alternator 14V/7
Kit Water Leak Sensor & Alarm SP60 12V

Other Kits
Motor Bracket Width 185/187
Motor Bracket Width 205
Front Water Pomp MINI-17/29 Kit(Spline)
Boiler Kit (S)
Pression Gauge Kit

Exhaust System
Exhaust Flange (S)
Kit Dry Exhaust With Flexible Pipe (S)
Kit Dry Exh. Flexible Pipe & Silencer(S)

Power Take-off Pulley
Pulley 2B (S)
Pulley 2A (S)

Kit Keel Cooling
Kit Refroid. Quille et Esc. Sec (S)

Instrument panel for engines TE1
TE1 Panel 12V

Kits NMEA 2000 - one engine
Kit SDC 2000 MINI-17/29 12V
Kit SDC 2000 MINI-17/29 24V

Engine Body

D_MIA2_1_1			Cylinder Head		
FIG.	REF.	QTY	DESCR.	FROM	UPTO
1	13821011.4	2	HANGER Engine		
2	13821001.4	1	Head Assy CYLINDER		
2A	13520013	1	Cap,SealING		
2B	13821012	2	Cap		
2C	17621002.4	4	Guide Valve		
2D	13921061G	2	Seat Valve (Intake)		
2F	(*)	5	Not available [NP]		
3	13821004	1	Gasket Cylinder Head		
4	13821005	6	Bolt,cylinder head		
5	17621013.4	2	Bolt,cylinder head [NP]		
6A	52102256	2	Bolt DIN 933 M8-15 8.8		
6B	53033008	2	Washer GROWER DIN 127-8		
7	17621011.4	1	Plug TAPER		

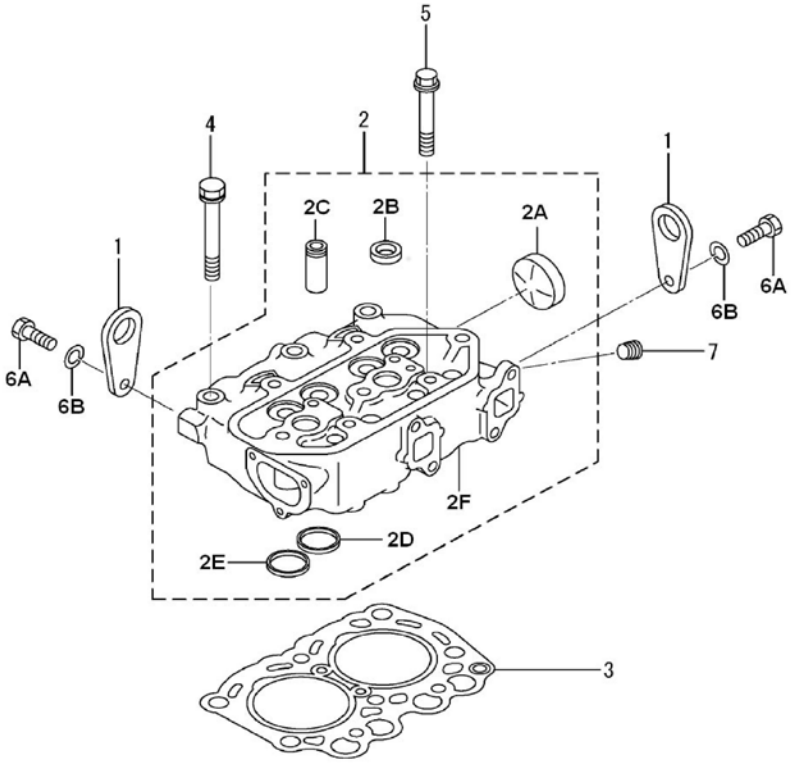

[NP] Not provided

Engine Body

D_MIA2_1_2			Rocker Cover & Breather		
FIG.	REF.	QTY	DESCR.	FROM	UPTO
1	13821017.4	1	Cover,Rocker [NP]		
1B	13821010	1	Gasket Rocker Cover		
1C	13821008.4	1	Cover,Rocker		
2	13821018	2	Nut		
3	17427004G	2	Washer DIN 125-6 [NP]		
4	17621006.4	1	Hose BREATHER		
5	17621003.4	1	Cap Oil FILLER		
5A	13721007	1	O-Ring D. 30X3		

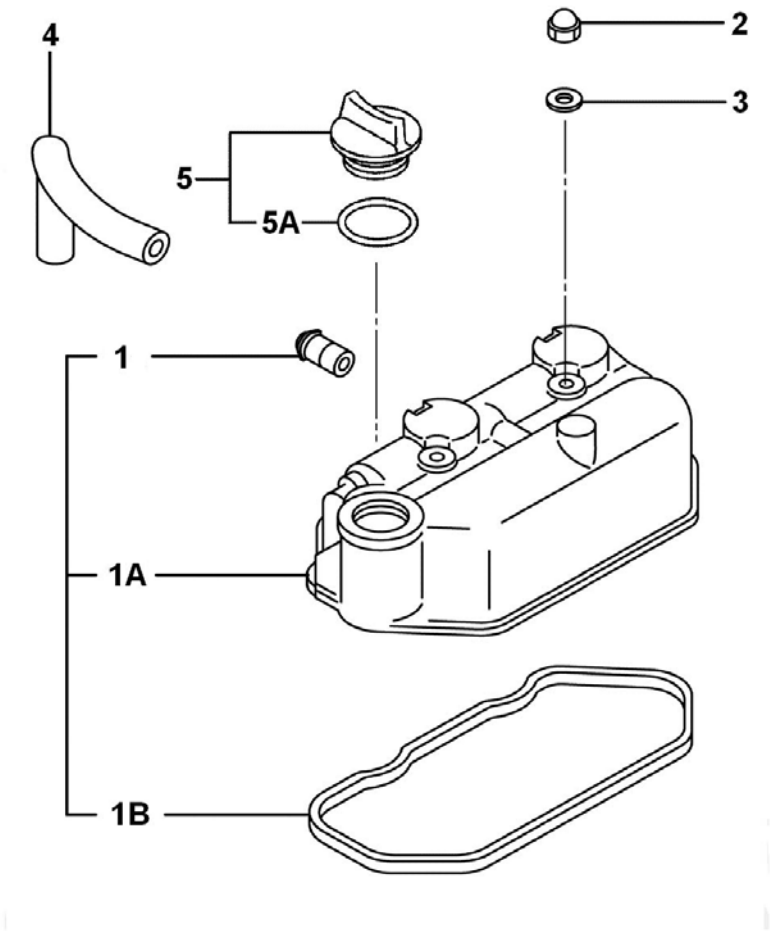

[NP] Not provided

Engine Body

D_MIA1_1_3			Valve Drive		
FIG.	REF.	QTY	DESCR.	FROM	UPTO
1	13822069	4	Cap Stem		
2	(*)	1	Not available [NP]		
2A	13822046.4	1	Shaft Assy,Rocker		
2B	13822048.4	2	STAY Rocker		
2C	13822042	4	ARM Rocker		
2E	17622070.4	1	Pin GROOVED		
2F	17622047.4	1	Spring Rocker SHAFT		
2G	52120006	4	Nut DIN 934 M6 8.8		
2H	53040012	2	CIRClip DIN 471 E-12		
2I	13822044	4	Screw Adjusting		
3	13822055.1	2	Intake Valve [NP]		
4	13822056.1	2	Exhaust Valve [NP]		
5	13822058	4	Retainer Valve SP		
6	17622059.4	8	LOCK Valve		
7	13222054	4	Seal Valve Stem		
8	13822053	2	Bolt Rocker STAY		
9	17622061.4	4	Tappet		
10	17622041.4	4	ROD PUSH		
11	52101265	2	Bolt DIN 931 M8-60 8.8		
12	53033008	2	Washer GROWER DIN 127-8		
14	13822057.4	4	Spring,Valve [NP]		23/08/2017
14	13822057.1	4	Spring,Valve	23/08/2017	

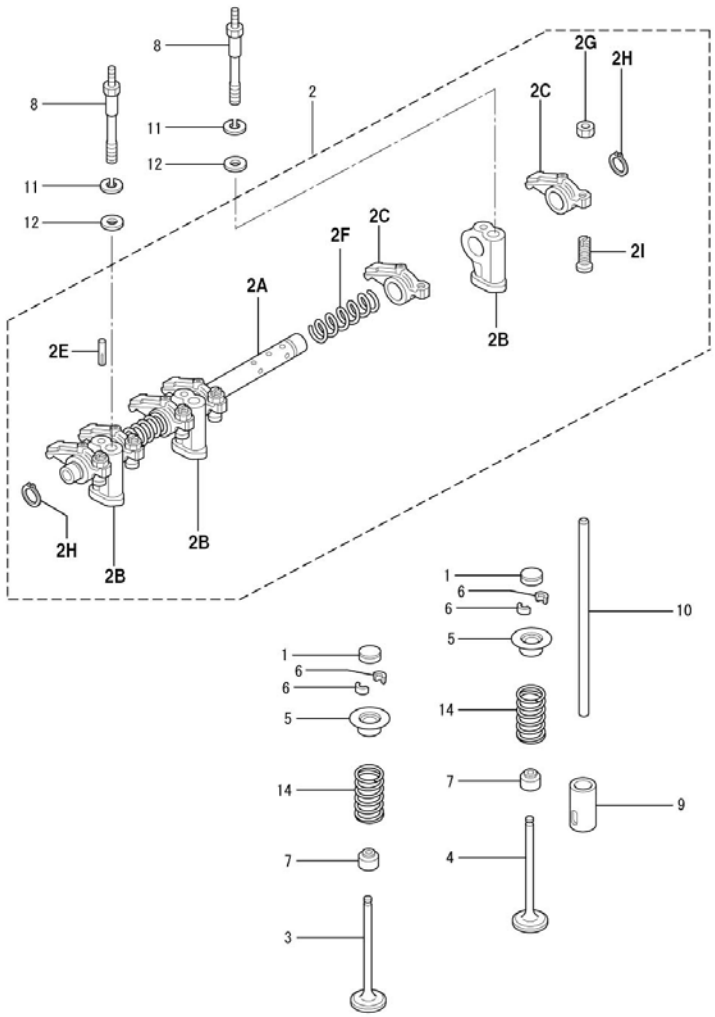

[NP] Not provided

Engine Body

D_MIA2_1_4			Timing Parts		
FIG.	REF.	QTY	DESCR.	FROM	UPTO
1	13822033	2	Washer CamShaft Stop		
2	17622067.4	3	Bearing Ball		
3	13822035.4	1	CamShaft		
4	17622036.4	1	KEY		
5	53040016	1	CIRClip DIN 471 E-16		
6	17622068.4	1	Bearing Ball		
7	13822040	1	Shaft Fuel Injection Pump		
8	13822060.4	1	Key, Sunk		
9	13822066	1	Ball Bearing 6005-C3		
10	13822043.4	1	Gear,Fuel INJ.Pump Z=52		
11	13922065G	1	Gear Oil Pump		
12	53040020	1	CIRClip DIN 471 E-20		
13	17622034.4	1	Plate DISTANCE		
14	17622038.4	1	Gear Assy,IDLER Z=40		
15	17622043.4	1	Gear,Fuel INJ.Pump Z=52		
16A	52102155	1	Bolt DIN 933 M6-12 8.8		
16B	53033006	1	Washer GROWER DIN 127-6		

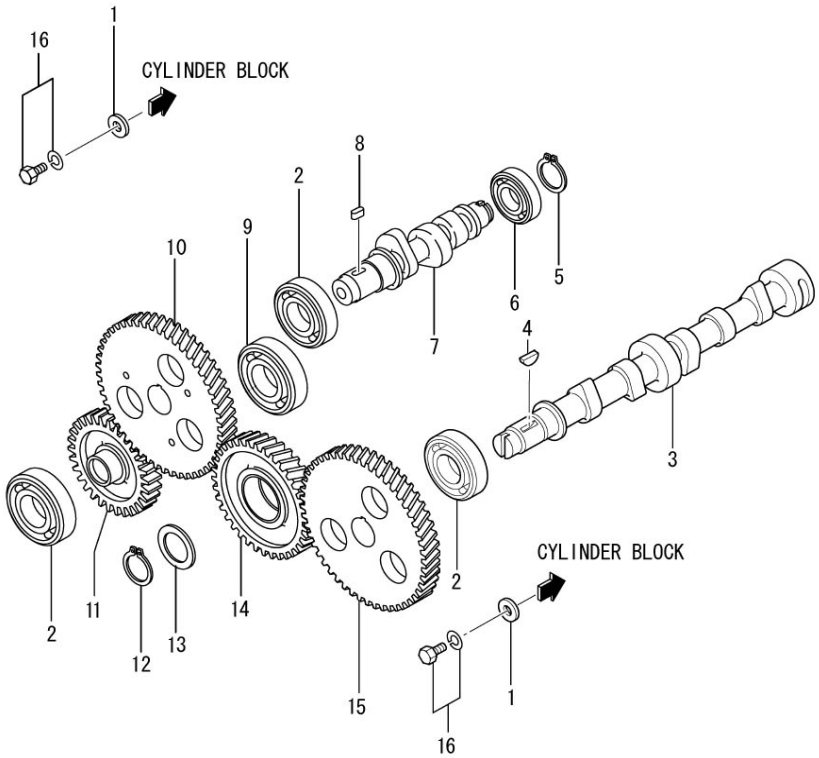

Engine Body

D_MIA2_1_5			Gear Case		
FIG.	REF.	QTY	DESCR.	FROM	UPTO
1	13820045	1	Cap SealING (20)		
2	13820035.4	1	Case Gear		
2A	17621011.4	1	Plug TAPER		
2B	17620035.4	1	Case Gear		
2C	13224045	1	Plug		
2D	17620052.4	1	Housing Oil Pump		
2E	17221043	3	Bolt,W/Washer		
2F	13820013.4	1	Plug		
2G	13120032	1	Washer 18-23-1,5 [NP]		
2H	13224043	1	Plunger		
2I	13824044	1	Spring RELIEF		
2J	13820050	1	Gear Oil Pump INN		
2K	13820051	1	Gear Oil Pump OUT		
3	17620040.4	1	Gasket Gear Case [NP]		
4	13820039	1	Oil Seal		
5	13820042	3	Bolt DIN 933 M6-35 8.8 [NP]		
6	13720038	4	Bolt [NP]		
7	52102166	1	Bolt DIN 933 M6-65 8.8 CINCADO		
8	13322074	4	Bolt DIN 933 M6-16 8.8 [NP]		
9	13820044	2	O-Ring D. 11X2,5		
10	13820037	1	Housing Pump Gear		
11	13820038	1	Gasket Housing		
12	17122051	1	Bolt, w/washer		
13	13220043	2	Stud L 34		
15	13321016	4	Washer GROWER DIN 127-8 [NP]		
16	13220042	3	Stud L 54		
16	17120049	3	Nut M8		

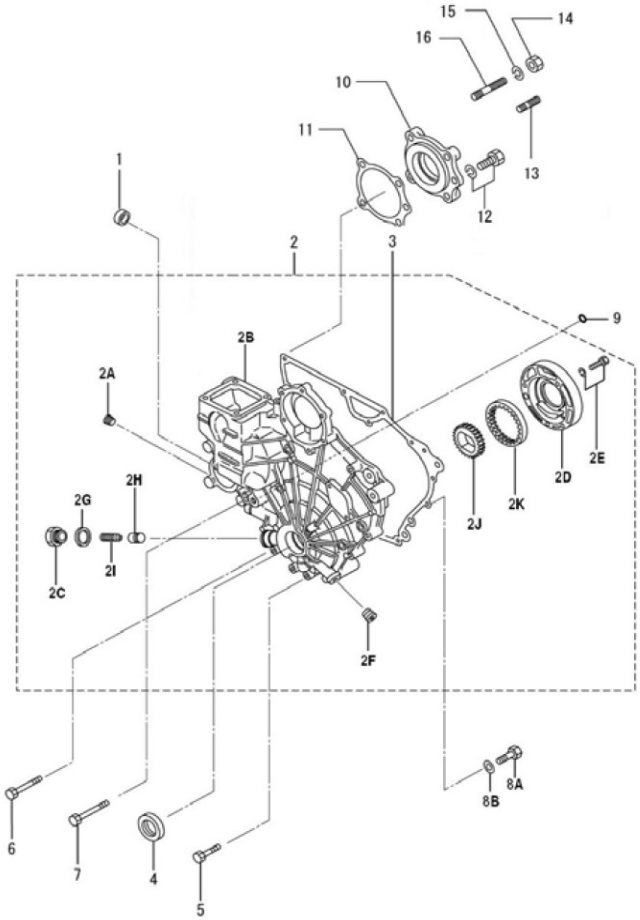

[NP] Not provided

Engine Body

D_MIA2_1_6			Cranckcase		
FIG.	REF.	QTY	DESCR.	FROM	UPTO
1	13820011	1	Cover		
2	17620012.4	1	Gasket Cover		
3A	13520013	2	Cap,SealING		
3B	13820009.1	6	Bolt Bearing Cap		
3C	13220012	1	Cap Sealing		
4	13820011	3	Cover		
5	17620036.4	2	Pin Dowel		
6	17620014.4	1	Shaft IDLER		
7	17620007.4	1	Guide		
8	17620020.4	1	Pin		
9	13820013	1	Plug Expansion		
0	(*)	1	Not available [NP]		
10	17620009.4	2	Bushing		
11	17620021.4	1	Bushing		
12	17620022.4	2	BUSHING,KNOCK		
13	17620010.4	3	Bushing		
14	17620023.4	1	Plug TAPER		
15	13820002	4	Seal Side		
16	13820017	1	Plate, Front		
17	13822060.4	1	Key, Sunk		
18	17620018.4	1	Gasket Front Plate [NP]		
19	17620016.4	1	Gasket Oil Seal C		
20	13820008	1	Seal Oil		
21	17624047.4	1	Shaft Oil Filter		
22	17620024.4	1	Plug TAPER		
23	52102157	6	Bolt DIN 933 M6-20 8.8		
24A	52102156	7	Bolt DIN 933 M6-16 8.8		
24B	53033006	7	Washer GROWER DIN 127-6		
25	52102257	2	Bolt DIN 933 M8-20 8.8		
26	13820003	1	Bearing Set CRANK STD		
27	13820004	1	Bearing Set CRANK		
28	13820005	1	Bearing Set CRANK		
29	17621003.4	1	Cap Oil FILLER		
29A	13721007	1	O-Ring D. 30X3		
30	13820129C	1	Gauge Oil LEVEL		

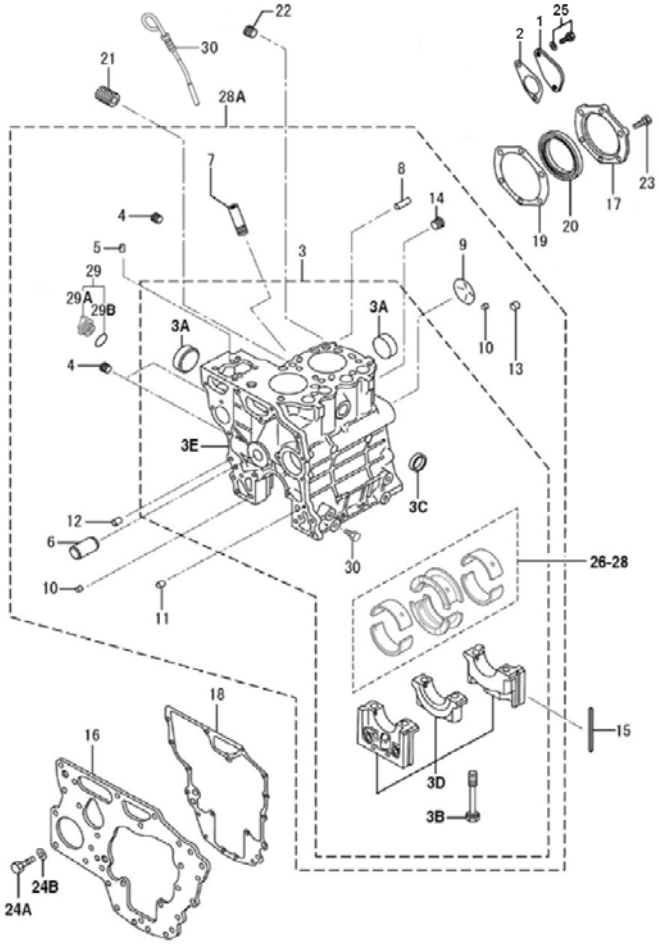

[NP] Not provided

Engine Body

D_MIB1_1_7			Rear Plate		
FIG.	REF.	QTY	DESCR.	FROM	UPTO
1	17120062	6	Bolt,w/washer		
2	13820024	1	Plate REAR		
3	13520060	1	Pin KNOCK (8X10)		

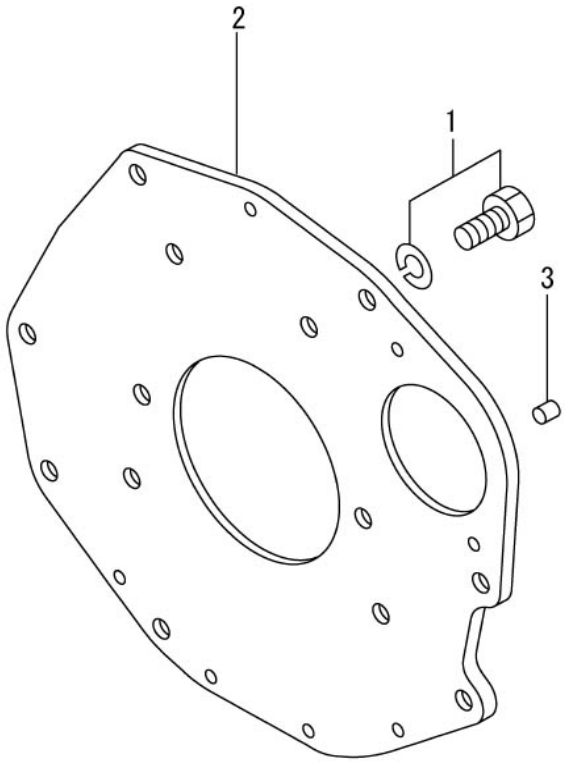

Engine Body

D_MIA1_1_8			Piston & Connectiong Rod		
FIG.	REF.	QTY	DESCR.	FROM	UPTO
1	13822001.1	2	Piston & Pin Set STD.		
2	13822002.1	2	PISTON & Pin SET O.S. 0.25		
3	13822003.1	2	Piston & Pin Set O.S. 0.50		
4	13822006	2	Ring Set,Piston STD.		
5	13822007	2	Ring Set,Piston O.S. 0.25		
6	13822008	2	Ring Set,Piston O.S. 0.50		
7	17622012.4	2	ROD Assy		
7A	13222011	4	Nut,connecting rod		
7B	13222013	4	Bolt,connecting rod		
8	13822014	2	Bearing Set,CON-ROD STD.		
9	13822015	2	Bearing Set,Con-Rod U.S. 0.25		
10	13822016	2	Bearing Set,Con-Rod U.S. 0.50		

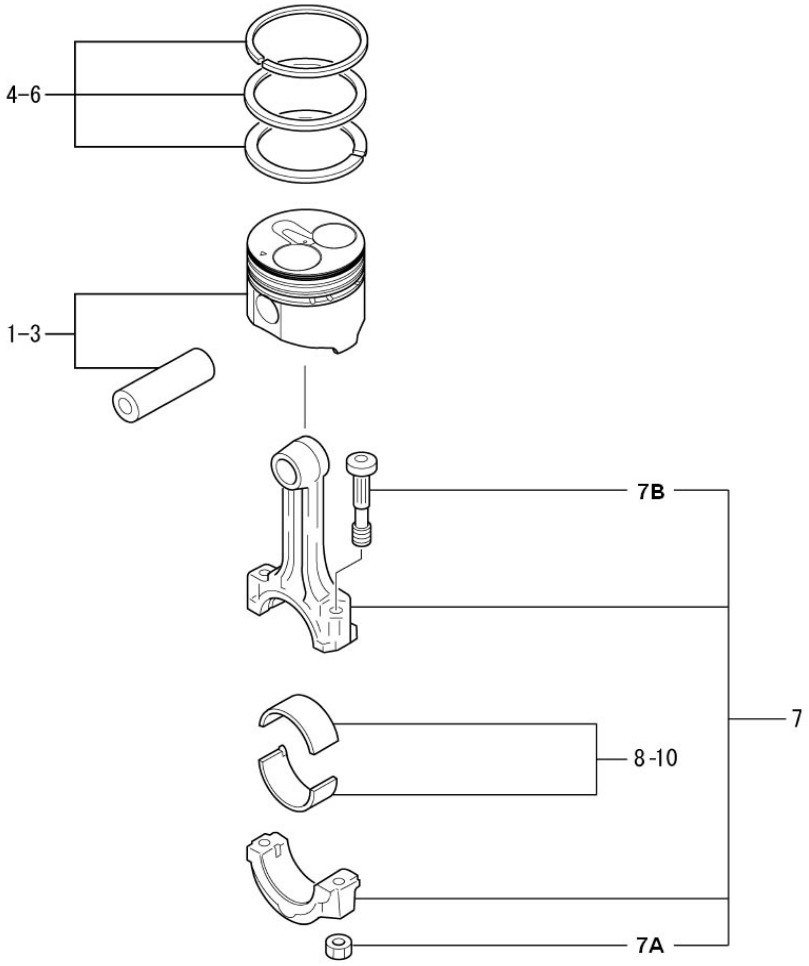

Engine Body

D_MIA2_1_9			Crankshaft & Flywheel		
FIG.	REF.	QTY	DESCR.	FROM	UPTO
1	13822018	1	CrankShaft		
2	13822024.4	1	Pulley CrankShaft [NP]		
3	17622021.4	1	Gear CrankShaft Z=26		
4	13822026	1	Nut		
5	51030016	1	Washer DIN 125-16		
6	53033016C	1	Washer		
7	17622036.4	2	KEY		
8	13822027.4	1	Flywheel Assy		
8A	17622029.4	1	Gear Ring Z=106 [NP]		
9	13822031.4	4	Bolt Flywheel		

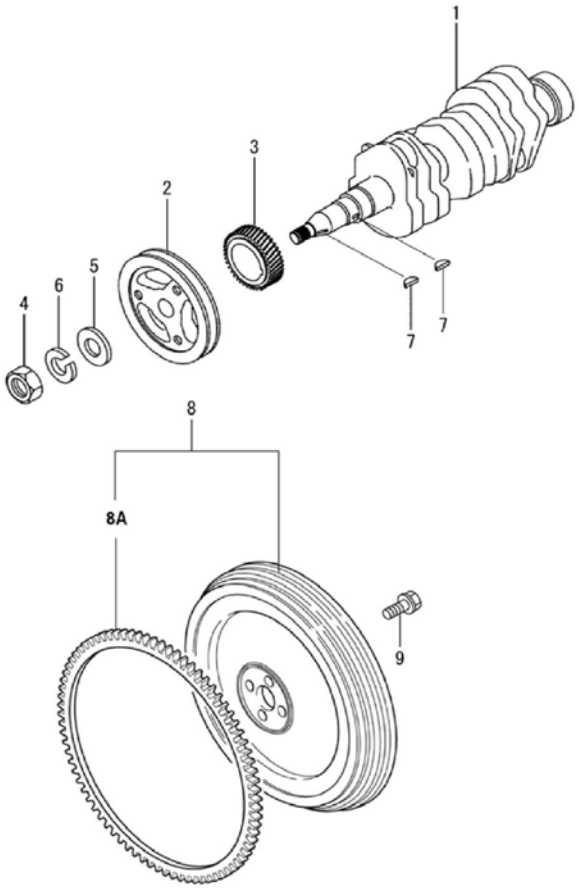

[NP] Not provided

D_MIB1_1_10			Oil System		
FIG.	REF.	QTY	DESCR.	FROM	UPTO
1	13124051	1	Filter Oil Element		
2	17624060.4	1	SWITCH Assy		
3	51221014	1	Nut DIN 936 M14X1,5 5.6 ZINC		
4	13824052	1	SCREEN Assy Oil		

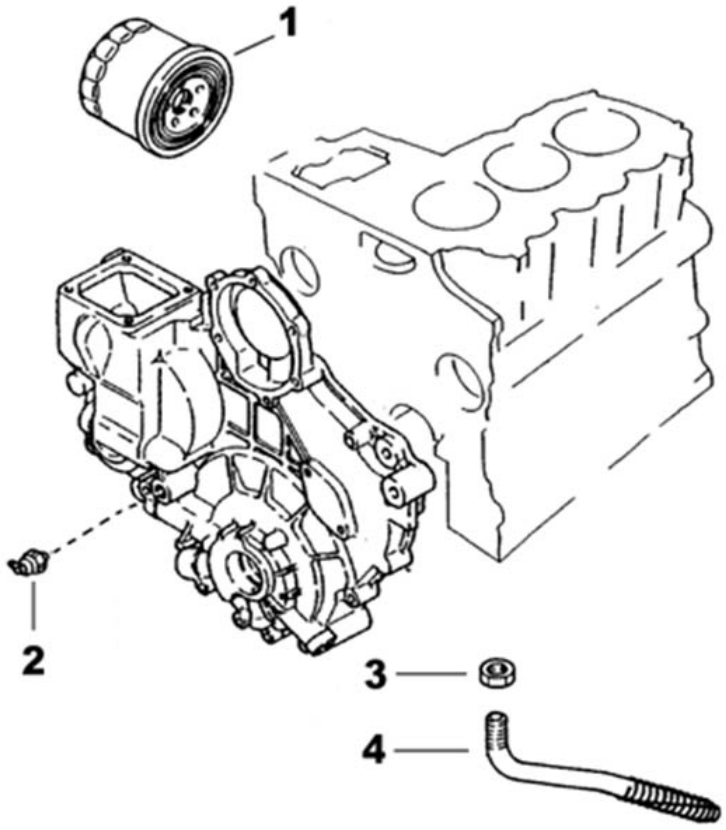

Engine Body

D_MIA1_1_11			Oil Pan		
FIG.	REF.	QTY	DESCR.	FROM	UPTO
1	13820030.4	1	PAN Assy Oil		
2	13820033.4	1	Gasket Oil PAN		
3A	52102155	14	Bolt DIN 933 M6-12 8.8		
3B	53033006	14	Washer GROWER DIN 127-6		
4	17214022	1	Bracket, Pipe		
5	53203358	1	Bolt DIN 912 M12-1,25-25 12.9		
6	51030012	1	Washer DIN 125-12		
7	13814021REC	1	ExtraCTION,Hose		
7A	13814021	1	ExtraCTION, hose [NP]		
7B	16514020	1	Plug		
7C	16514022	1	Coupling,screw		
7D	56000077	2	Washer 18-23-1,5		
7E	56000217	1	Washer 13-20-3		
8	13812020	1	Pump,oil Suction		

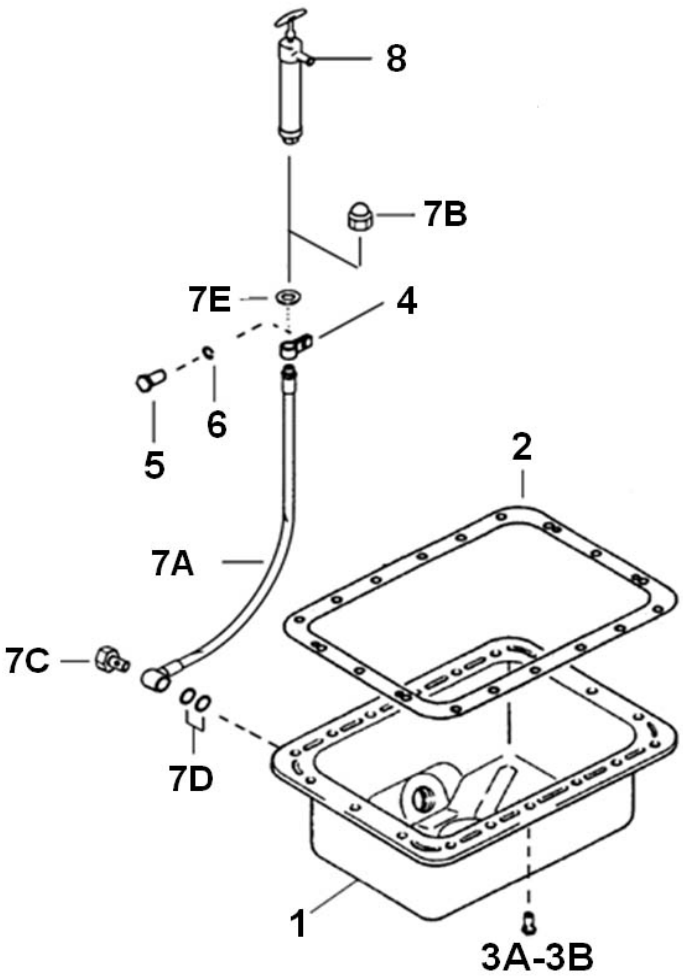

[NP] Not provided

Engine Body

D_MIB1_1_12			Engine Brackets		
FIG.	REF.	QTY	DESCR.	FROM	UPTO
1	13810001.1	1	Bracket Front, Left	08/07/2014	
2	53033010	4	Washer GROWER DIN 127-10		
3	52203308	4	Bolt DIN 912 M10-1,25-25 12.9		
4	13810002.1	1	RIGHT, front bracket	08/07/2014	
5	61631100	4	Anti Vibration Mount Type A 50SHA		

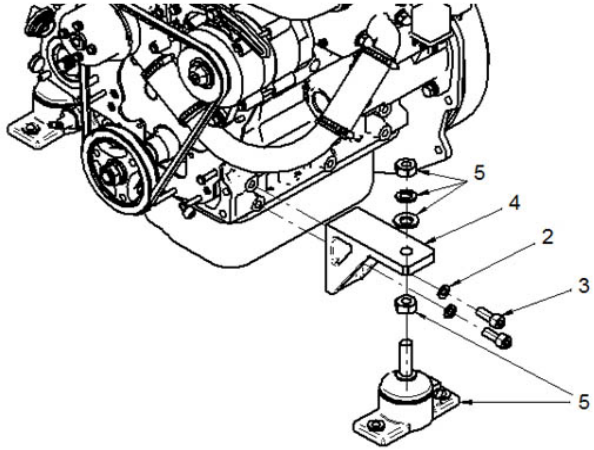

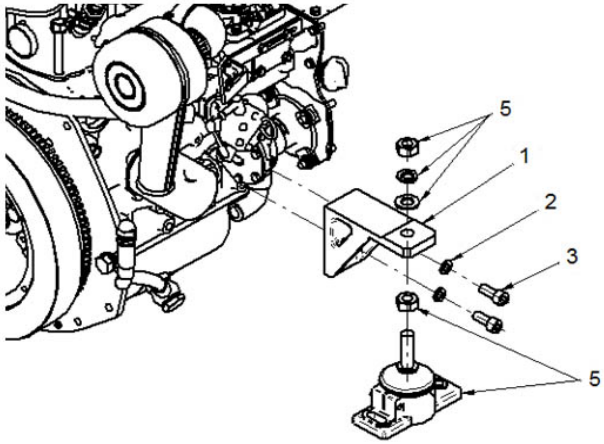

Inlet & Exhaust

D_MIA1_2_1			Inlet		
FIG.	REF.	QTY	DESCR.	FROM	UPTO
1	15119015	1	CABLE Holder Ball		
2	14419023	1	Ball JOINT		
3	53033006	1	Washer GROWER DIN 127-6		
4	52120006	1	Nut DIN 934 M6 8.8		
5	13819006	1	Bracket, Engine Control		
6	52102156	2	Bolt DIN 933 M6-16 8.8		
7	51030006	2	Washer DIN 125-6		
8	55307104	2	Bolt DIN 86 W3/16-10		
9	14719013	1	Clamp,cable		
10	13821029	1	Pipe Intake		
11	17610012	1	Air Filter Assy without filter element		14/02/2017
11	13810074	1	Filter Air Complete	15/02/2017	
12	13821042	1	O-Ring D. 40X3,5		
13	13821033.1	1	Bolt,W/Washer		
14	17621017	1	Pipe		
15	13821030	1	Cover Assy Intake		
16	52102162	2	Bolt DIN 933 M6-45 8.8		
17	52102157	1	Bolt DIN 933 M6-20 8.8		
18	13821032.4	1	Gasket Intake COV		

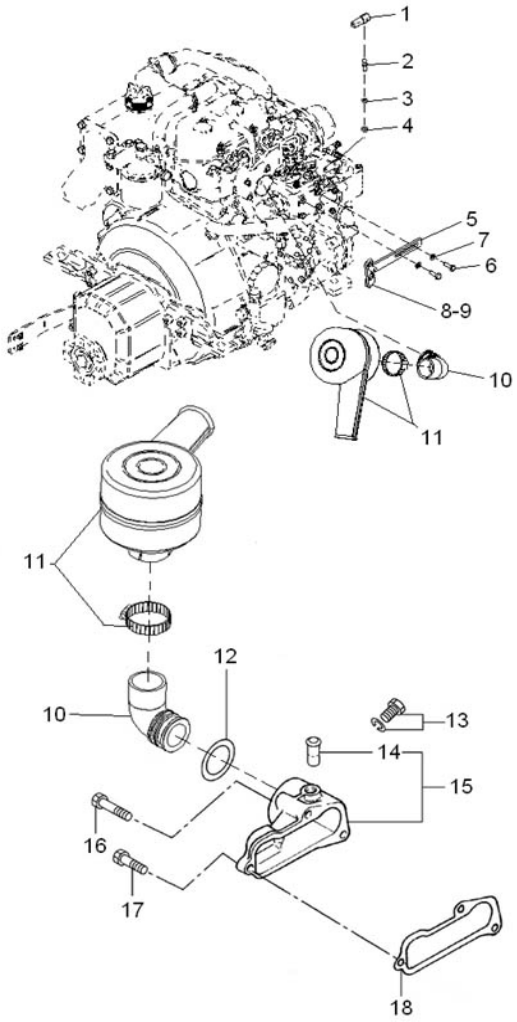

Cooling System

D_MIB1_3_1			Water Pump		
FIG.	REF.	QTY	DESCR.	FROM	UPTO
2	13921021	1	Pulley Water Pump		
3A	52102155	4	Bolt DIN 933 M6-12 8.8		
4	13821020	1	Pump Assy Water		
5	17621022.4	1	Gasket Water Pump		
6	52102157	2	Bolt DIN 933 M6-20 8.8		
7	52102160	1	Bolt DIN 933 M6-35 8.8		
8	52101162	1	Bolt DIN 931 M6-45 8.8		
9	52102164	2	Bolt DIN 933 M6-55 8.8		
11	13821027	1	Thermostat 71º		
13	13821031	1	Gasket Water OutL		
14	17621037.4	1	FITTING Thermostat New [NP]		
15	17621033.4	1	Gasket Thermostat		
16	52102158	2	Bolt DIN 933 M6-25 8.8		
17	52101165	1	Bolt DIN 931 M6-60 8.8		
18	17621026.4	1	Pipe BYPASS		
19	13821038	2	O-Ring D. 9X2		
20	56000073	2	Copper Washer 16-23-1,5		
21	60900070	1	Thermo-Switch 97ºC		
22	60900980	1	Temperature Sensor		
24	13811020.1	1	Cover		
25	53033006	6	Washer GROWER DIN 127-6		
26	17621039	1	Bolt		
27	52101163	1	Bolt DIN 931 M6-50 8.8		

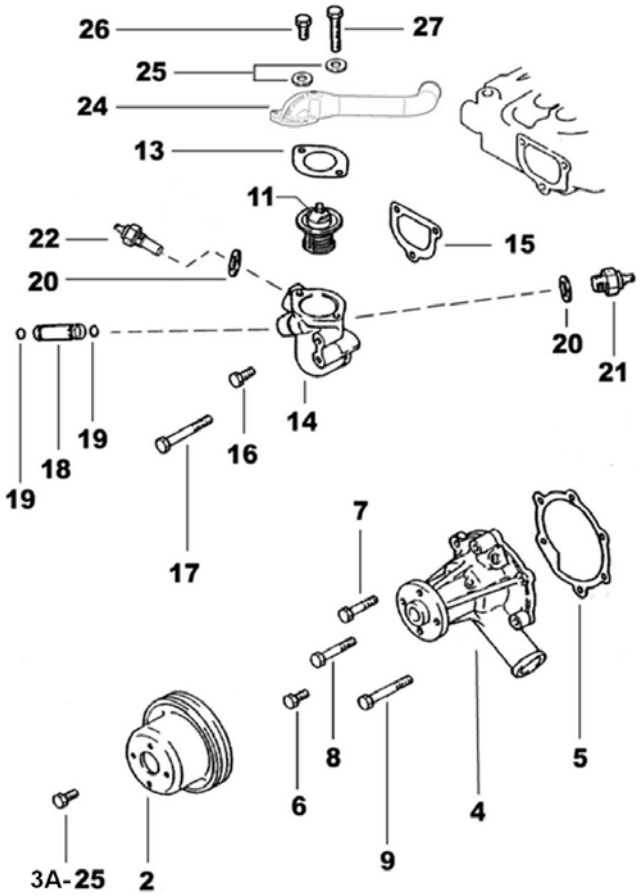

[NP] Not provided

Cooling System

D_MIA1_3_4			Cooler Pipes		
FIG.	REF.	QTY	DESCR.	FROM	UPTO
1	M87501927	0,7	Water Intake Hose (HQ) D. 19-27		
2	54081020	2	Clamp DIN 3017 20-32/9 W4		
4	17120049	4	Nut M8		
5A	51030008	4	Washer DIN 125-8		
5B	53033008	4	Washer GROWER DIN 127-8		
6	13811062	4	Pump Bracket		
7	33811000	1	1/2" Pump Water, Set [NP]		22/05/2017
7	37611000	1	1/2" Pump Water, Set	22/05/2017	
8	52101163	1	Bolt DIN 931 M6-50 8.8		
9	53033006	2	Washer GROWER DIN 127-6		
10	13811020.1	1	Cover		
11	13821031	1	Gasket Water OutL		
12	54081025	2	Clamp DIN 3017 25-40/9 W4		
13A	13811017.1	1	Pipe 28-38-50		
13B	13811017	1	Pipe 28-38-80		
14	13811023	1	Elbow		
15	13811022	1	SLEEVE Rubber		
16	17011007	1	O-Ring D. 57X3		
17	13811000.3R	1	Complet Heat Exchanger for MINI-17	12/07/2017	
17	13811000.2	1	Complet Heat Exchanger for MINI-17 [NP]		12/07/2017
18	13811018	2	Manifold,mounting stud		
19	56000057	2	Washer 8-13-1,5		
20	55122008	2	Nut DIN 1587 M8		
21	13821035	1	Gasket Exhaust Manifold		
22	54120008	1	Nut DIN 934 M8		
23	53038008	1	Washer DIN 6798-A 8		
24	14711008	2	Stud,cover		
25	13211035	2	Exhaust Manifold Outlet Bend		
26	54082025	4	Clamp DIN 3017 25-40/12 W4		

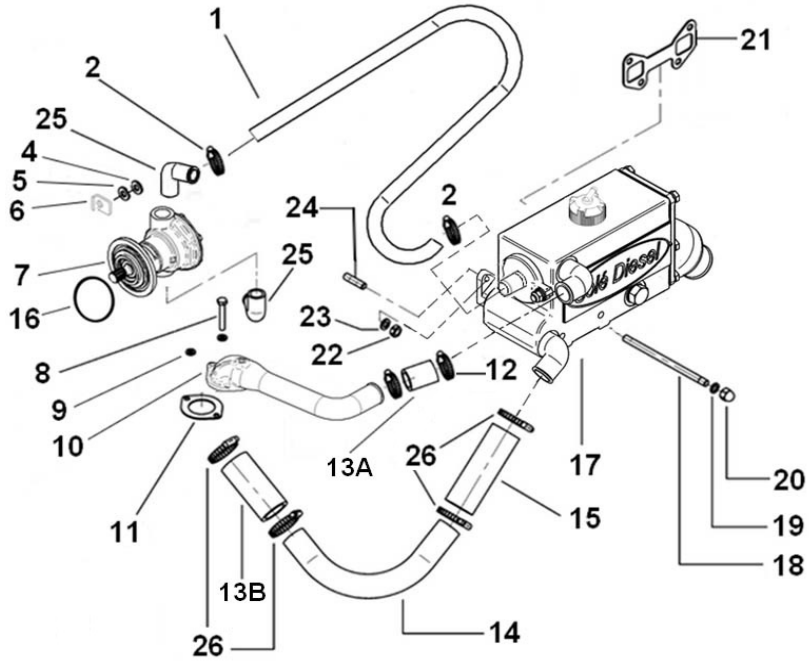

[NP] Not provided

Cooling System

13811000.1			Cooler For MINI-17, Complete		
FIG.	REF.	QTY	DESCR.	FROM	UPTO
1	13811001	1	Complet Heat Exchanger for MINI-17 [NP]		
2	13811004	1	Element, water cooler		
3	13811007	2	O-Ring D. 57X2,5		
4	13811002	1	Cover, water cooler		
5	13211031	1	Raccord 1/2"		
6	13311006	2	Stud,cover		
7	51030008	2	Washer DIN 125-8		
8	53033008	8	Washer GROWER DIN 127-8		
9	54120008	2	Nut DIN 934 M8		
10	12113092	1	Plug		
11	13811010	1	Cap		
12	13813016.1	1	Gasket	27/02/2014	
13	52102258	6	Bolt DIN 933 M8-25 8.8		
14	13813015B	1	Elbow wet exhaust Kit [NP]		
15	12111076	1	Plug		
16	56000073	1	Copper Washer 16-23-1,5		
17	54102306	1	Bolt DIN 933 M10-16 INOX.		
18	56000061	1	Washer 10-16-1,5		

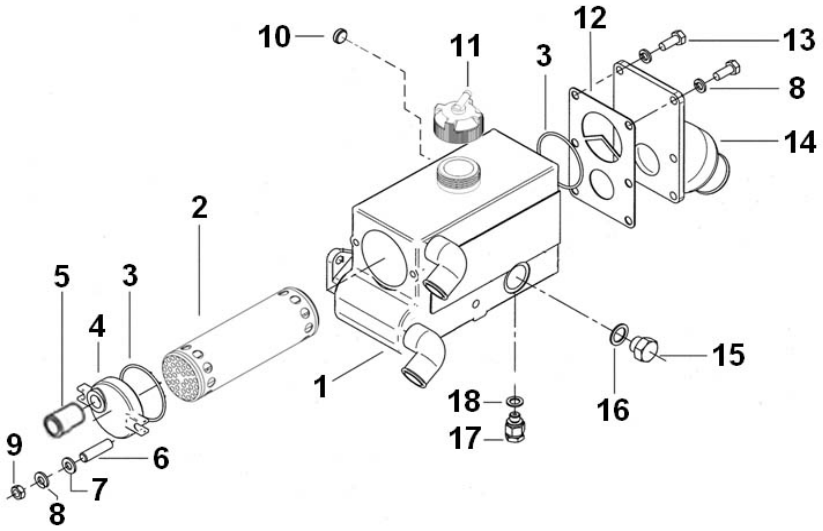

[NP] Not provided

Cooling System

13811000.2			Cooler For MINI-17, CompletE		
FIG.	REF.	QTY	DESCR.	FROM	UPTO
1	13811001	1	Complet Heat Exchanger for MINI-17 [NP]		
2	13811004	1	Element, water cooler		
3	13811007	1	O-Ring D. 57X2,5		
4	13811002	1	Cover, water cooler		
5	13211031	1	Raccord 1/2"		
6	13311006	2	Stud,cover		
7	51030008	2	Washer DIN 125-8		
8	53033008	8	Washer GROWER DIN 127-8		
9	54120008	2	Nut DIN 934 M8		
10	12113092	1	Plug		
11	13811010	1	Cap		
12A	13811008	1	Joint EPDM D. 58,2x62x3,5		
12B	13811009	1	Joint NOVAPHIT E D. 31x45x2		
13	52102258	6	Bolt DIN 933 M8-25 8.8		
14	13813015C	1	Elbow,wet exhaust [NP]		
15	12111076	1	Plug		
16	56000073	1	Copper Washer 16-23-1,5		
17	54102306	1	Bolt DIN 933 M10-16 INOX.		
18	56000061	1	Washer 10-16-1,5		

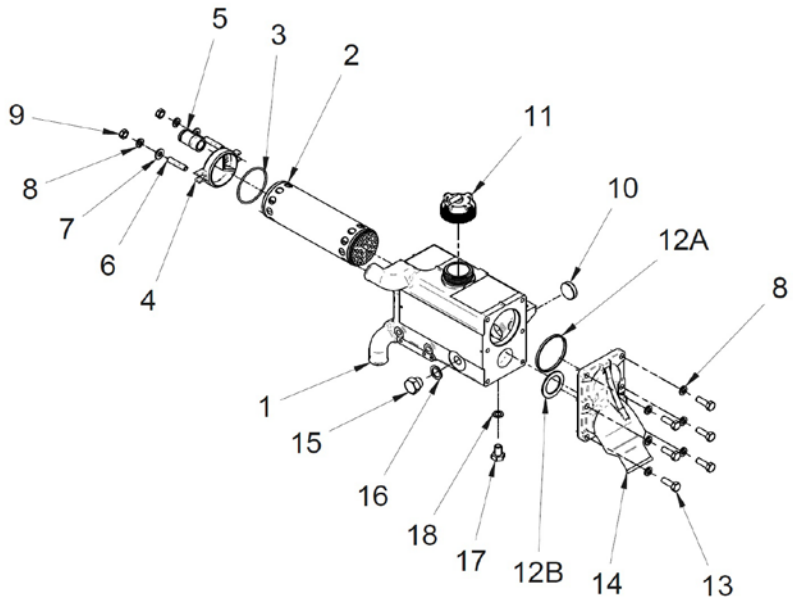

[NP] Not provided

Cooling System

13811000.3			Cooler For MINI-17, Complete		
FIG.	REF.	QTY	DESCR.	FROM	UPTO
1	13211031	1	Raccord 1/2"		
2	13811002	1	Cover, water cooler		
3	13811007	2	O-Ring D. 57X2,5		
4	13811047	1	Element, water cooler		
5	13811046	1	Body, Water Cooler [NP]		
6	13811010	1	Cap		
7	13811043	1	Engine Anode		
8	13811042	1	Cover, water cooler		
9	54081020	2	Clamp DIN 3017 20-32/9 W4	03/11/2017	
9	54081016	2	Clamp DIN 3017 16-27/9 W4		02/11/2017
10	13811032	1	Elbow		
11	13813015.1	1	Elbow,wet exhaust	21/06/2017	
11	13813026	1	Elbow,WET Exhaust		20/06/2017
12	17613014	1	Gasket		
13	54102306	1	Bolt DIN 933 M10-16 INOX.		
14	56000061	1	Washer 10-16-1,5		
15	53033008	8	Washer GROWER DIN 127-8		
16	51030008	4	Washer DIN 125-8		
17	13311006	4	Stud,cover		
18	18011009	1	Anode Plug		
19	52102258	4	Bolt DIN 933 M8-25 8.8		02/08/2017
19	52103258	4	Bolt DIN 912 M8-25 8.8	03/08/2017	
20	17111061	2	Bolt		
21	17111060	1	Plate "SOLE Diesel" [NP]		
22	12111076	1	Plug		
23	56000073	2	Copper Washer 16-23-1,5		
24	54120008	4	Nut DIN 934 M8		
25	13811011	1	Hose 3/4		

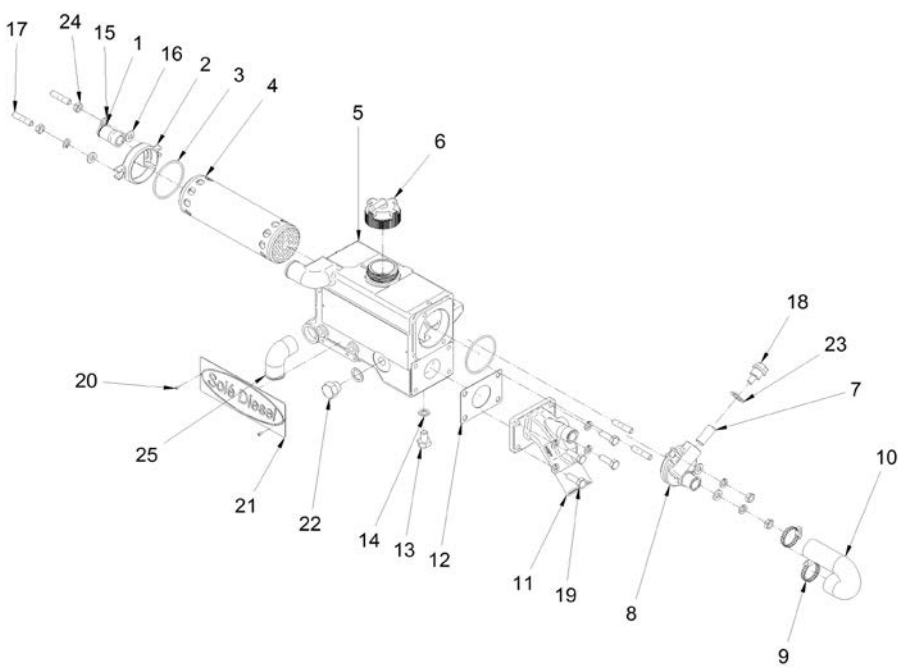

[NP] Not provided

Cooling System

	33811000		1/2" Pump Water, Set		
FIG.	REF.	QTY	DESCR.	FROM	UPTO
1	54102104	6	Bolt DIN 933 M5-10 INOX.		
2	31211002	1	Cover Pump		
3	31211008	1	1/2" Impeller		
5	31211003	1	Gasket Cover		
6	55307105	1	Bolt DIN 86 W3/16-13		
7	31211005	1	Cam		
8	33411026	1	Wearplate		
9	33811010	1	Shaft,Water Pump		
10	33811015	1	Spacer		
11	53041032	1	CIRClip DIN 472 I-32		
12	33411014	2	Ball Bearing 6002-C3		
13	33411020	1	Seal		
14	33311013	1	O-Ring D. 15X2		
15	33411019	1	Seal		
17	33811001	1	Body,Water Pump		
18	33411017	1	Pin,Dowel		

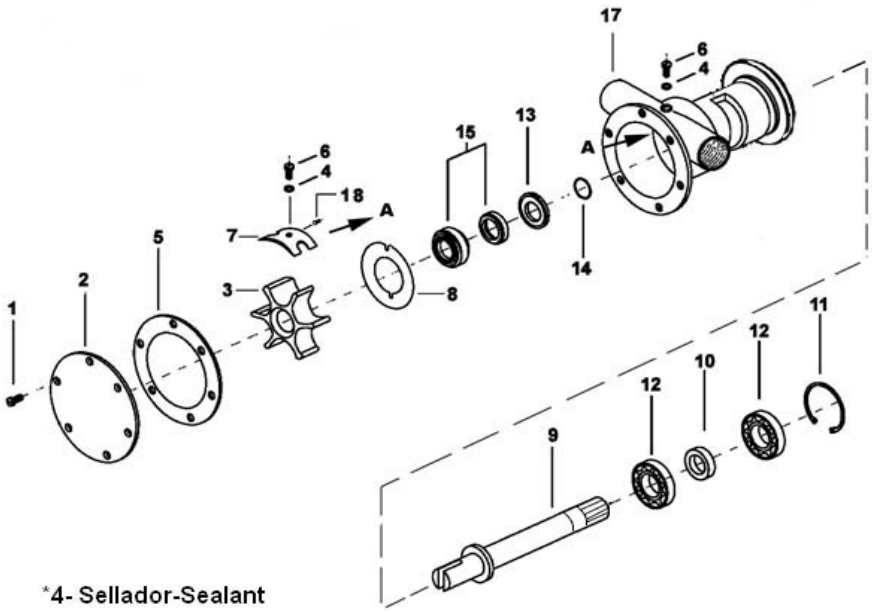

*4- Sellador-Sealant

Cooling System

	37611000		1/2" Pump Water, Set		
FIG.	**REF.**	**QTY**	**DESCR.**	**FROM**	**UPTO**
1	54102154	3	Bolt DIN 933 M6-10 INOX		
2	37611002	1	Cover Pump		
3	37611003	1	O-Ring D. 57x1,5		
4	31211008	1	1/2" Impeller		
5	37611026	1	Plate, Friction		
6	33811010	1	Shaft,Water Pump		
7	33411019	1	Seal		
8	33311013	1	O-Ring D. 15X2		
9	37611001	1	Body, Water Pump 1/2"		
10	33411020	1	Seal		
11	33411014	2	Ball Bearing 6002-C3		
12	33811015	1	Spacer		
13	53041032	1	CIRClip DIN 472 I-32		

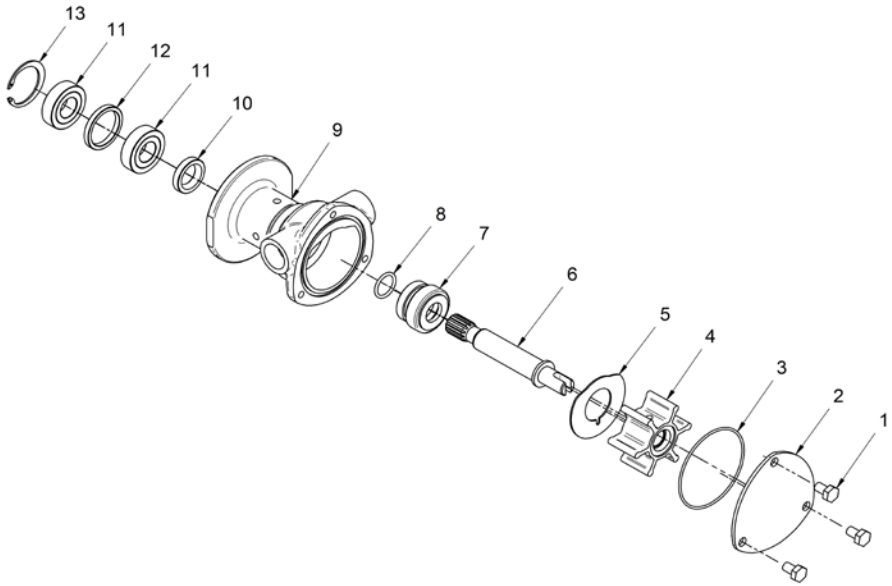

D_MIA1_4_1			Fuel Pipe		
FIG.	REF.	QTY	DESCR.	FROM	UPTO
1	17624015.4	1	Pipe Injection N.1		
2	17624016.4	1	Pipe Injection N.2		
3	13824024.4	2	Nut		
4	13824026	1	Tube Gas-Oil SPILL		
5	17424025G.1	2	Gasket Fuel Return (Genset)		
6	13824013	2	Injector Washer		
7	17624027	4	Bolt		
8	13824005	0	Shim Adjusting T=0,5MM. [VAR]		
9	13824006	0	Shim Adjusting T=0,4MM. [VAR]		
10	13824007	0	Shim Adjusting T=0,6MM. [VAR]		
11	13824008	0	Shim Adjusting T=0,7MM. [VAR]		
12	13824009	0	Shim Adjusting T=0,8MM. [VAR]		
13	13824010	0	Shim Adjusting T=0,9MM. [VAR]		
14	13824011	0	Shim Adjusting T=1,0MM. [VAR]		
15	13824003	0	Shim Adjusting T=0,2MM. [VAR]		
16	13824004	0	Shim Adjusting T=0,3MM. [VAR]		

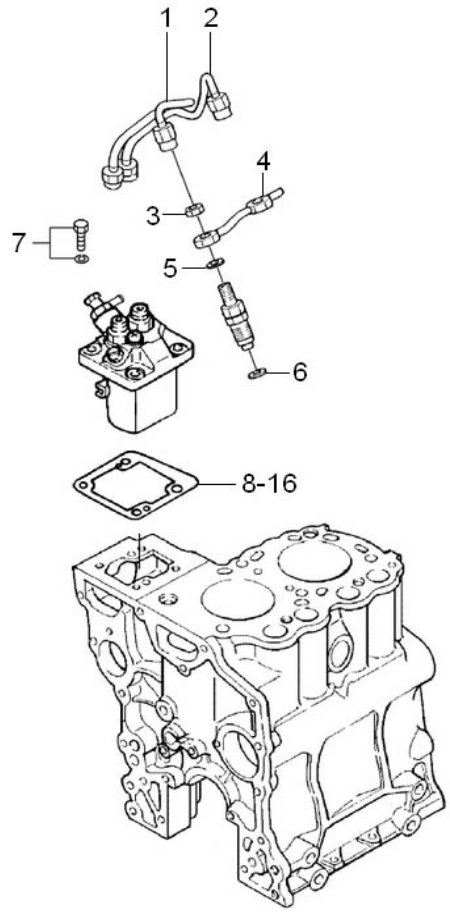

[VAR] Variable according to repair

D_MIA2_4_2			Injection Nozzle		
FIG.	REF.	QTY	DESCR.	FROM	UPTO
1	13826001	2	Nozzle & Holder A		
1A	13826002	2	Body Assy		
1BA	13826010	2	Washer 1,25		
1BB	13826011	2	Washer 1,30		
1BC	13826012	2	Washer 1,35		
1BD	13826013	2	Washer 1,40		
1BE	13826014	2	Washer 1,45		
1BF	13826015	2	Washer 1,50		
1BG	13826016	2	Washer 1,55		
1BH	13826017	2	Washer 1,60		
1C	17126004	2	Spring, pressure		
1CI	13826019	2	Washer 1,65		
1CJ	13826020	2	Washer 1,70		
1D	13826003	2	Pin Pressure		
1E	13826007	2	PIECE DISTANCE		
1F	17626018	2	Nozzle Assy		
1G	17226006	2	Nut, Nozzle RETAINING		
1H	13824013	2	Injector Washer		

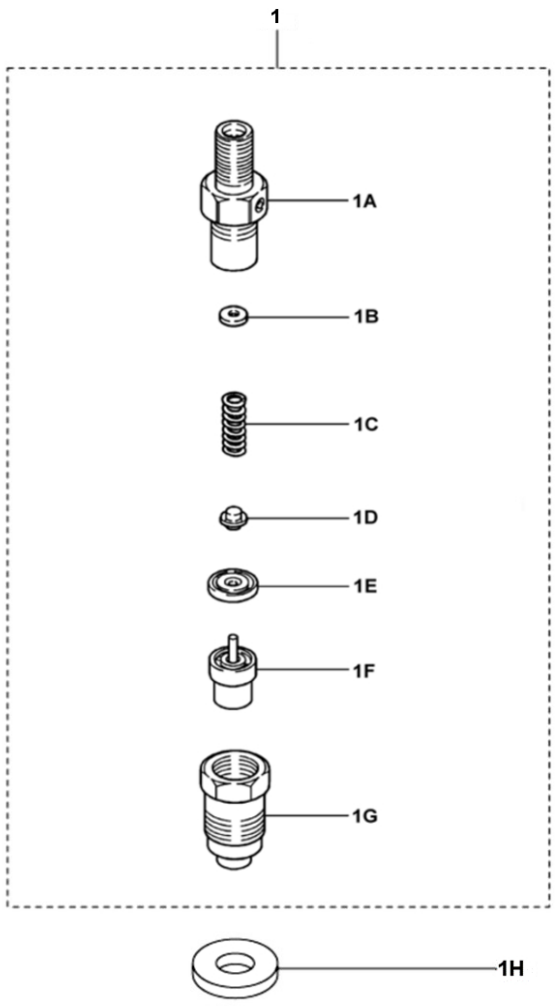

D_MIA2_4_3			Fuel Injection Pump		
FIG.	REF.	QTY	DESCR.	FROM	UPTO
1	13825005	1	Housing Assy		
2	17625004.4	2	Holder		
3	17625033.4	2	O-Ring		
4	13925002G	2	Spring [NP]		
5	13925007G	2	Gasket DELIVERY V [NP]		
6	17625008.4	2	Valve SUB Assy		
7	13925009G	2	Element SUB Assy [NP]		
8	13825010	2	SLEEVE SUB Assy		
9	13925011G	2	Seat [NP]		
0	13825001.4	1	Pump Assy,Fuel Injection		
10	13925012G	2	Spring [NP]		
11	13925013G	2	Seat [NP]		
12A	13925015G	2	Plate Tappet Shim 1,85		
12B	13825016G	2	Plate Tappet Shim 1,90		
12C	13925017G	2	Plate Tappet Shim 1,95		
12D	13925018G	2	Plate Tappet Shim 2,00		
12E	13925019G	2	Plate Tappet Shim 2,05		
12F	13925020G	2	Plate Tappet Shim 2,10		
12G	13925021G	2	Plate Tappet Shim 2,15		
12H	13925022G	2	Plate Tappet Shim 2,20		
12I	13925023G	2	Plate Tappet Shim 2,25		
12J	13925024G	2	Plate Tappet Shim 2,30		
12K	13925025G	2	Plate Tappet Shim 2,35		
12L	13925026G	2	Plate Tappet Shim 2,40		
12M	13925027G	2	Plate Tappet Shim 2,45		
12N	13925028G	2	Plate Tappet Shim 2,50		
13	13925029G	2	TAPPET Assy [NP]		
14	13825026	1	Screw Air		
15	13925031G	1	Washer,DRAIN Screw [NP]		
16	13825027	1	Screw HOLLOW		
17	17325029.3	1	Nipple Swivel		
18	13825025.3	2	Washer [NP]		
19	13925030G	2	Plate Set [NP]		
20	13925032G	2	Screw,W/Washer [NP]		
21	13825006	1	RACK		

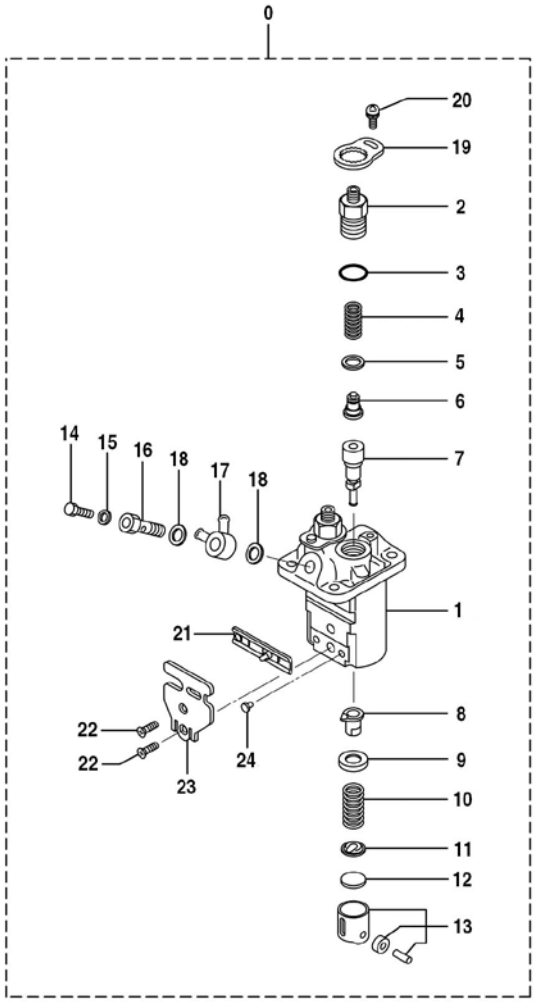

[NP] Not provided

D_MIA2_4_3			Fuel Injection Pump		
FIG.	REF.	QTY	DESCR.	FROM	UPTO
22	13825062	2	Screw		
23	13825063	1	Bracket		
24	13925034G	2	Pin Tappet Guide [NP]		

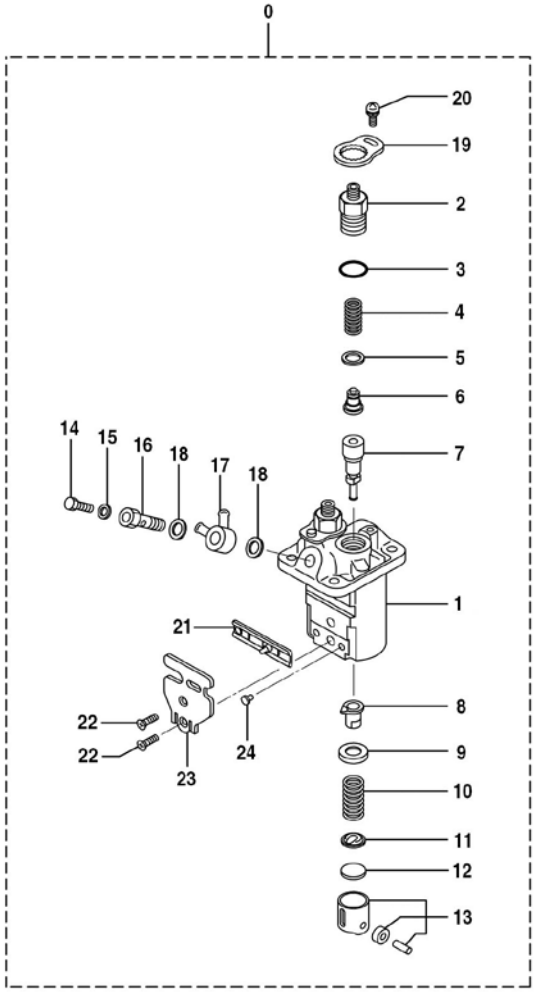

D_MIA2_4_4			Governor Parts		
FIG.	REF.	QTY	DESCR.	FROM	UPTO
1	17623020.4	1	Metal,Fuel		
2	17623019.4	1	Wire		
3	13123017	1	Bolt High Speed		
4	17223017.4	1	Bolt		
5	17623005.4	1	Stopper		
6	13823001	1	WEIGHT Assy,GOverNOR		
7	60530009	1	Shaft Assy,sliding		
8	17623014.4	1	Gasket Tie Rod CO		
9	13923005	1	ROD TIE		
10	13923006	1	Spring,TIE ROD		
11	17623032.4	1	Cover,Governor		
12	17623033.4	1	Gasket Governor Cover [NP]		
13	13823042	1	Cap TORQUE Set SE		
14	17623043.4	1	Cover TIE ROD		
15	13823015	1	Spring GOverNOR		
16	(*)	1	Not available [NP]		
16A	17223035	1	Nut		
16B	13823034	1	RACK Set Screw (new)		
17	17623003.4	1	Lever Assy Governor		
18	13823007	1	Lever Assy TENSIO		
19	17623006.4	1	Shaft Governor		
20	13823044	1	Spring TIE ROD		
21	17623008.4	1	Lever Assy SPEED		
22	13823027	1	Lever Governor SP		
23	13823036	1	Spring START		
24	17623009.4	2	Pin GROOVED		
25	52102155	4	Bolt DIN 933 M6-12 8.8		
26A	52102154	2	Bolt DIN 933 M6-10 8.8		
26B	53033006	2	Washer GROWER DIN 127-6		
27	52102156	4	Bolt DIN 933 M6-16 8.8		
28	13823011	1	Bolt,W/Washer		
29	17223032	2	Nut		
30	17223030	1	Nut		
31	53033008	1	Washer GROWER DIN 127-8		
32	13123021	1	O-Ring D. 7X1.8		

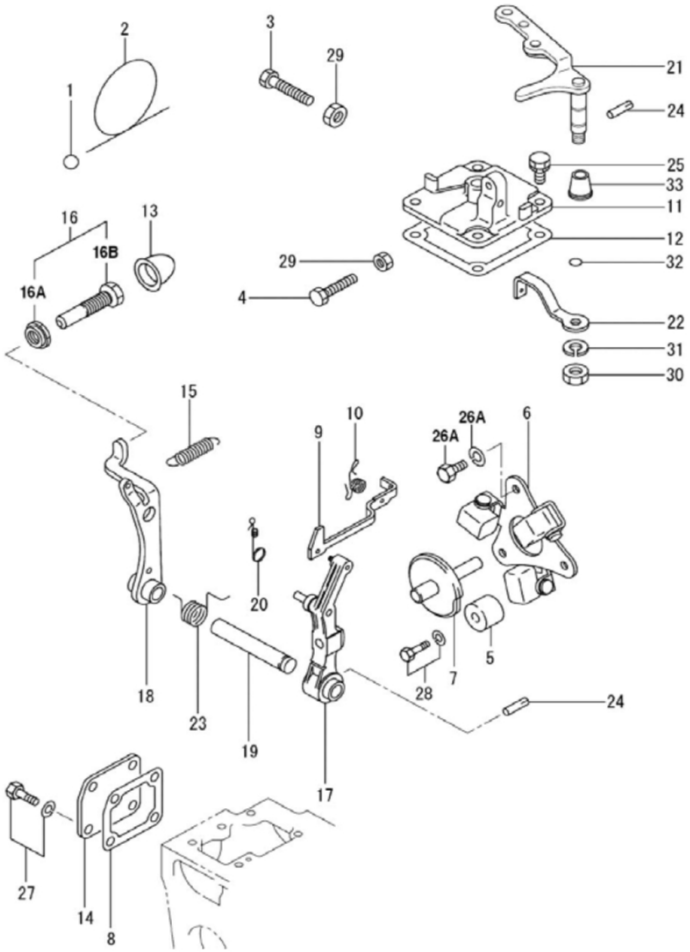

[NP] Not provided

D_MIA2_4_4			Governor Parts		
FIG.	REF.	QTY	DESCR.	FROM	UPTO
33	17623045.4	1	Cover,Governor Shaft		

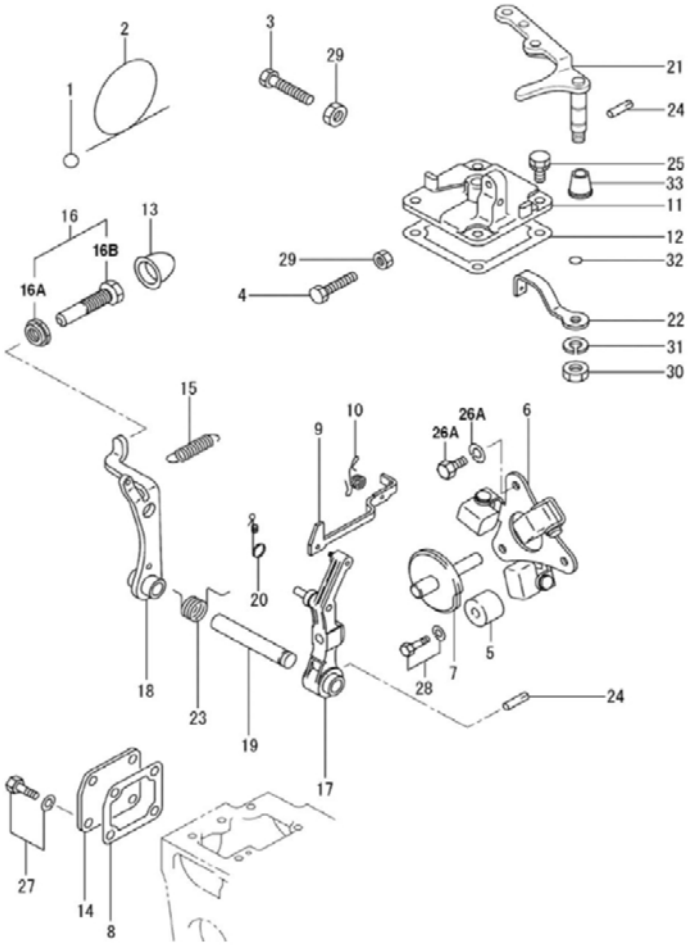

Fuel System

D_MIA2_4_5			Fuel Supply Parts		
FIG.	REF.	QTY	DESCR.	FROM	UPTO
1	13814070	1	Electric Fuel Feed Pump 12V		
4	51086016	2	ONE EAR Clamp With INTERIOR Ring		
5	13814017.5	1	Fuel Pump Hose		
6	12814051	2	Screw,eye		
7	57000369	4	Washer 14,2-20-1,5		
8	17614027	1	Hose		
9	13114022	1	Gas-Oil Filter Element		
10	13114120	1	Cover,filter f/.SMI		
11	51031008	2	Washer DIN 9021 8		
12	52102259	2	Bolt DIN 933 M8-30 8.8		
13	17614028	1	Bypass "T"		
14	51086011	4	ONE EAR Clamp With Interior Ring		
15	17614026	1	0,04 M. Hose		
16	13814020.3	1	0.22 M. Hose		
17	13814011	1	Bracket,Fuel Filter		
19	53033008	2	Washer GROWER DIN 127-8		
20	52120008	1	Nut DIN 934 M8 8.8		
22	52102257	1	Bolt DIN 933 M8-20 8.8		
23	13814024	1	Bracket		
24	52102154	2	Bolt DIN 933 M6-10 8.8		
25	53033006	2	Washer GROWER DIN 127-6		
26	51030006	2	Washer DIN 125-6		
27	53203358	1	Bolt DIN 912 M12-1,25-25 12.9		
31	53033012	1	Washer GROWER DIN 127-12		
32	13814072	2	NIPPLE EYE		
33	57000361	2	Washer 10-14-1,5		
NS	58088283	1	Pastic Cable Zip Tie [NS]		

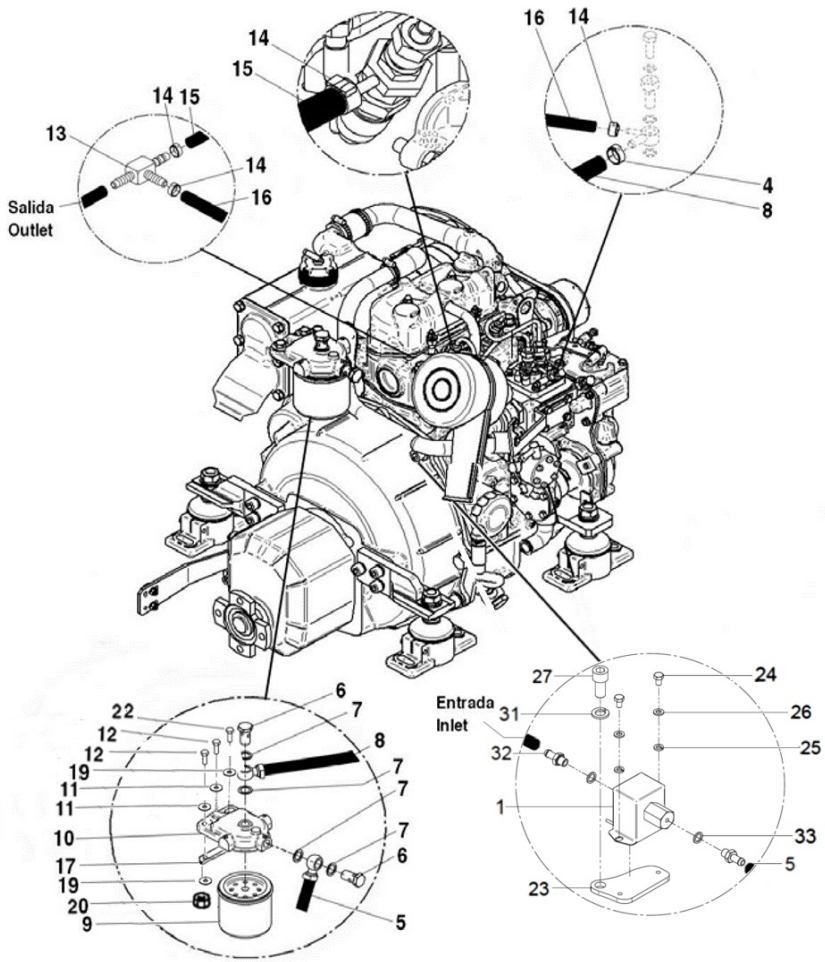

[NS] Not shown

Electrical System

	13817101		Kit Alternator 14V/75A ISKRA		
FIG.	REF.	QTY	DESCR.	FROM	UPTO
1	13817012	1	Alt. 14V/75A		
2	13817012.7	1	Pulley		
3	13817014	1	Plate		
4	17617027	1	V-Belt		
5	13817017	1	Spacer 17X28X5,5	09/09/2015	
6	17117002	1	Spacer 8,5X20X5		
7	13817118	1	Spacer 8,5x20x28	09/09/2015	
8	52101274	1	Bolt DIN 931 M8-110 8.8		
9	51030008	2	Washer DIN 125-8		
10	53033008	1	Washer GROWER DIN 127-8		
11	52120008	1	Nut DIN 934 M8 8.8		
12	52102157	1	Bolt DIN 933 M6-20 8.8		
13	51031008	1	Washer DIN 9021 8		
14	52102257	1	Bolt DIN 933 M8-20 8.8		
15	52102166	1	Bolt DIN 933 M6-65 8.8 CINCADO		
16	51030006	2	Washer DIN 125-6		
17	53033006	2	Washer GROWER DIN 127-6		
18	17617006	2	Spacer 6,5X12X5		
19	60900130	1	Flag Receptable Faston Terminal		
20	60900131	1	Insulation Flag Protective		
21	TR.16.6	1	Ring Terminal 16 Sec.		
22	TR.1.5.5	1	Ring Terminal 1.5 Sec.		

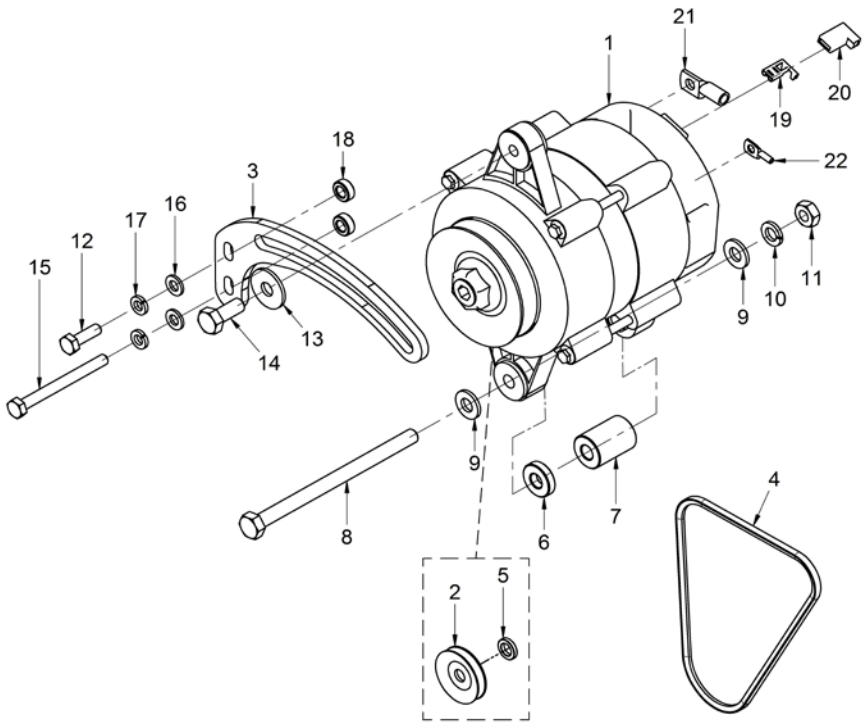

D_MIB1_5_5			Starter Assy		
FIG.	REF.	QTY	DESCR.	FROM	UPTO
1	13827002	1	Starter Assy 12 V		
2	52102259	2	Bolt DIN 933 M8-30 8.8		
3	53033008	2	Washer GROWER DIN 127-8		

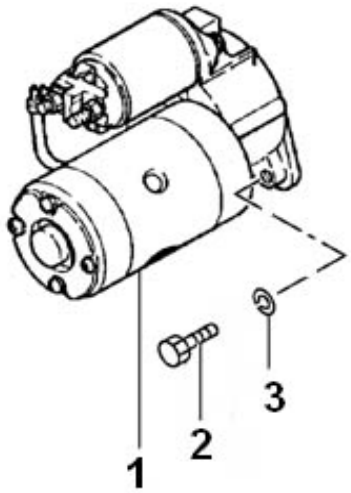

Electrical System

D_MIA1_5_7			Electrical Wiring		
FIG.	REF.	QTY	DESCR.	FROM	UPTO
1	60938125.2	1	SVT 20 MINI-17/29 Panel (Repl.) [NP]		
2	60938005	1	Panel N.2		
3	60900121	1	FuseHolder, panel		
4	60900118	1	Fuse 10 A.		
5	60900036	1	Key,Starter Switch		
6	60900038	1	Cover,KEY		
7	60900037	1	Key-Locking		
8	60900910	1	TACHO/HOURMETER 4000		
9	60900301.2	1	Integrated Circuit Plate 12V Protection	23/06/2015	
10	60900119	1	Fuse 0.5A		
12	60900929	2	Bulb 12V		
13	60900915	1	Water Gauge 12 V		
14	60938006	1	Gasket Panel		
15	13827005	1	Glow Relay		
16	13817005	1	Relay 6V		
17	51030005	1	Washer DIN 125-5		
18	52102104	1	Bolt DIN 933 M5-10 8.8		
19	52102154	2	Bolt DIN 933 M6-10 8.8		
20	51030006	2	Washer DIN 125-6		
21	60938210.1	1	Engine Wiring Ext. 3 M. SUPERSEAL		
22	60938200R.3	1	MINI-17/29 V3 Electrical Wiring		
23	13827018.4	1	Plate Glow Plug		
24	17627017.4	2	Plug,glow		
25	13824020	1	SOLENOID		
26	13425029	1	Nut (old)		
27	60934040	1	WIRINE		

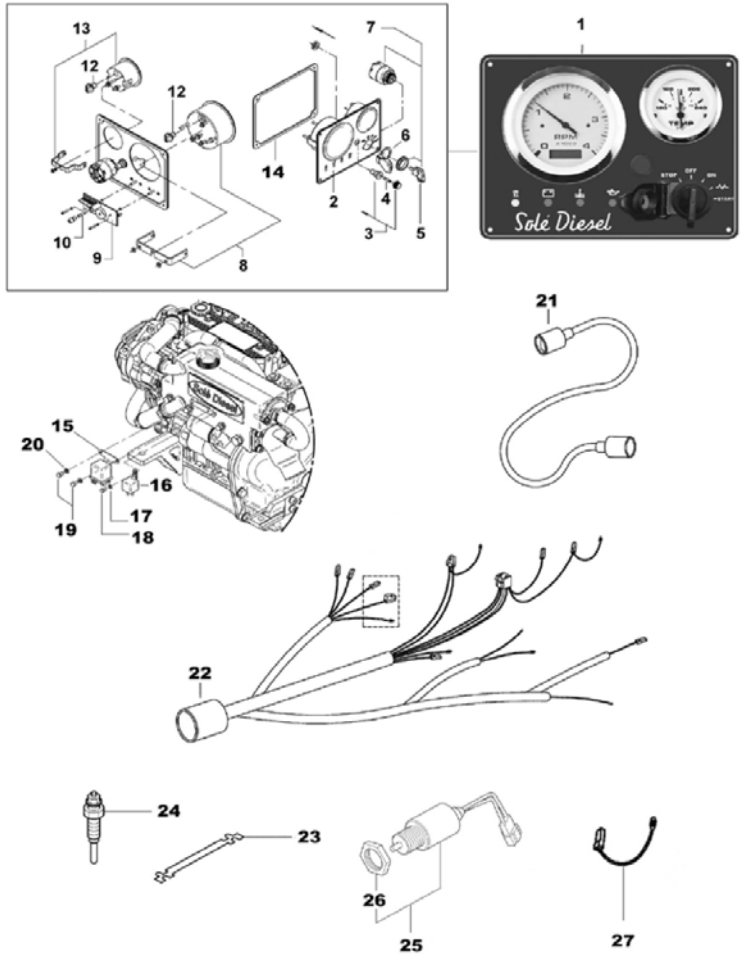

[NP] Not provided

D_MIB1_5_8			Deluxe Instrument Panel		
FIG.	REF.	QTY	DESCR.	FROM	UPTO
1	60938127.2	1	SVT 30 MINI-17/29 Panel (Repl.) [NP]		
3	60900929	4	Bulb 12V		
4	60900925R	1	VOLTMETER 12 V		
5	60938910	1	Tachometer MINI-17/26		
6	60900920R	1	Oil Pressure Gauge 12 V		
7	54108003	1	Bolt DIN 84 M3-8 INOX.		
8	60900119	1	Fuse 0.5A		
9	60900301.2	1	Integrated Circuit Plate 12V Protection	23/06/2015	
10	60900915R	1	Water Gauge 12 V		
11	60990006	1	Gasket Panel		
12	60900037	1	Key-Locking		
13	60900038	1	Cover,KEY		
14	60990005	1	Panel N.3		
15	60900121	1	FuseHolder, panel		
16	60900118	1	Fuse 10 A.		
17	60900036	1	Key,Starter Switch		

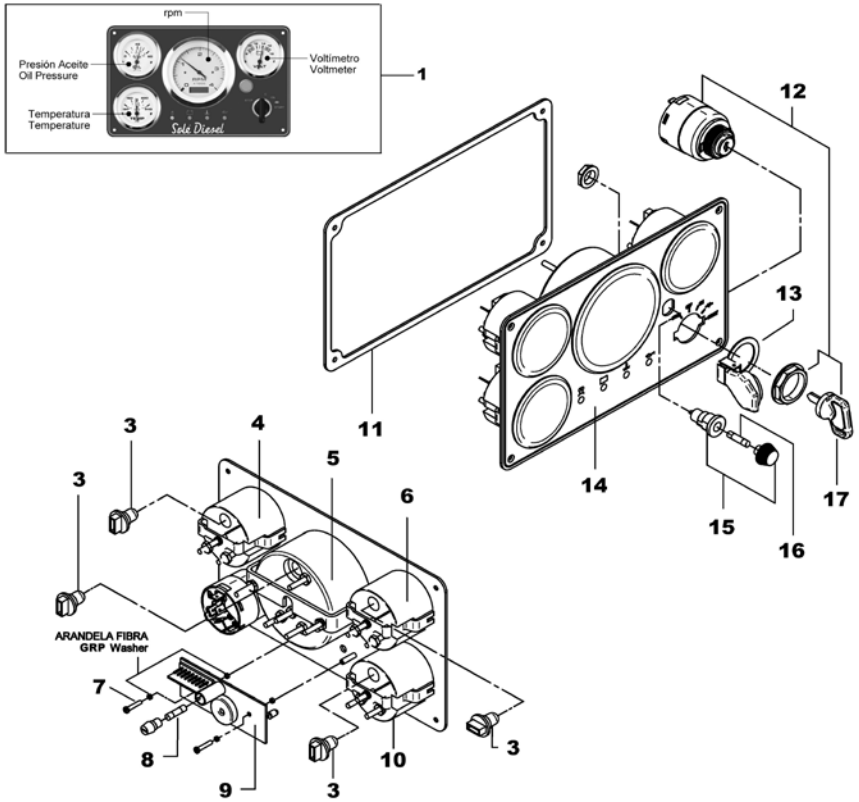

[NP] Not provided

Electrical System

D_60938130			SVT 20 MINI-17/29 Panel		
FIG.	REF.	QTY	DESCR.	FROM	UPTO
1	60938005.1	1	Panel N.2		
2	60900301.2	1	Integrated Circuit Plate 12V Protection		
3	54108003	2	Bolt DIN 84 M3-8 INOX.		
4	60900910.1	1	MTG Bracket 3" LG GA AMEGA		
5	60900910.2	3	Nut 8-32 W/CapTIVE STAR Washer		
6	60900037.2	1	Connector		
7	60900915.2	1	MTG Bracket		
8	60900037	1	Key-Locking		
9	60900931	2	SOCKET,WEDGE BASE		
10	60900929	2	Bulb 12V		
11	60900937	1	Water Gauge 12 V		
12	60938911	1	Tachometer MINI-17/26 SVT		
13	60900096	1	Cover Plate for Motor Propeller		
14	60938006.1	1	Gasket Panel		
NS	60900091	1	MICRO Relay 12V 12-20 [NS]		
NS	60910012	1	System Back Panel SVT/MVT 20 12V [NS]	07/12/2016	

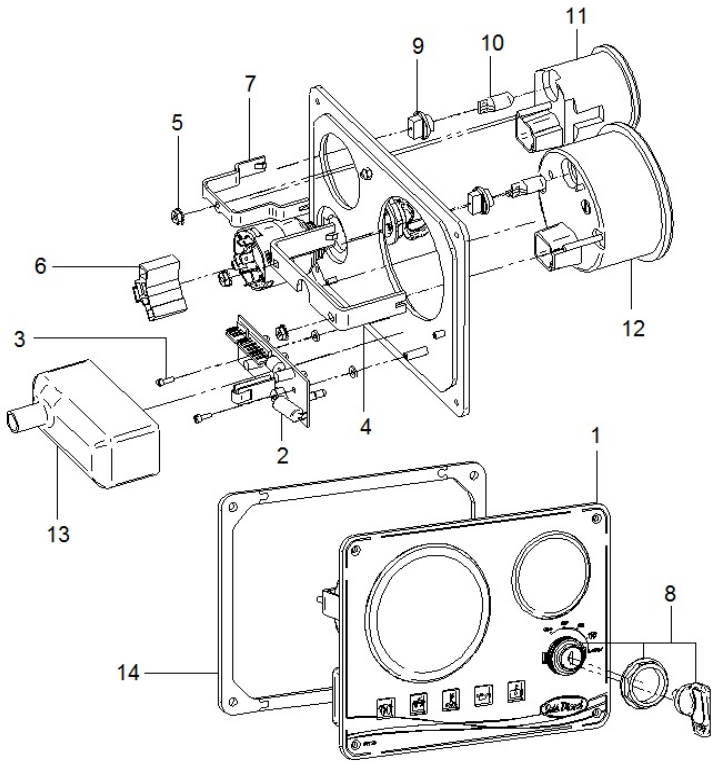

[NS] Not shown

Electrical System

D_60938132			SVT 30 MINI-17/29 Panel		
FIG.	REF.	QTY	DESCR.	FROM	UPTO
1	54108003	2	Bolt DIN 84 M3-8 INOX.		
2	60900037	1	Key-Locking		
3	60900037.2	1	Connector		
4	60900910.2	5	Nut 8-32 W/CapTIVE STAR Washer		
5	60900931	4	SOCKET,WEDGE BASE		
6	60900929	4	Bulb 12V		
7	60990005.1	1	Panel N.3		
8	60990006.1	1	Gasket Panel		
9	60900096	1	Cover Plate for Motor Propeller		
10	60900301.2	1	Integrated Circuit Plate 12V Protection		
11	60900910.1	1	MTG Bracket 3" LG GA AMEGA		
12	60900915.2	3	MTG Bracket		
13	60900941	1	VOLTMETER 12V		
14	60938911	1	Tachometer MINI-17/26 SVT		
15	60900937	1	Water Gauge 12 V		
16	60900939	1	Oil Pressure Gauge 12V		
NS	60900091	1	MICRO Relay 12V 12-20 [NS]		
NS	60910014	1	System Back Panel SVT/MVT 30 12V [NS]	07/12/2016	

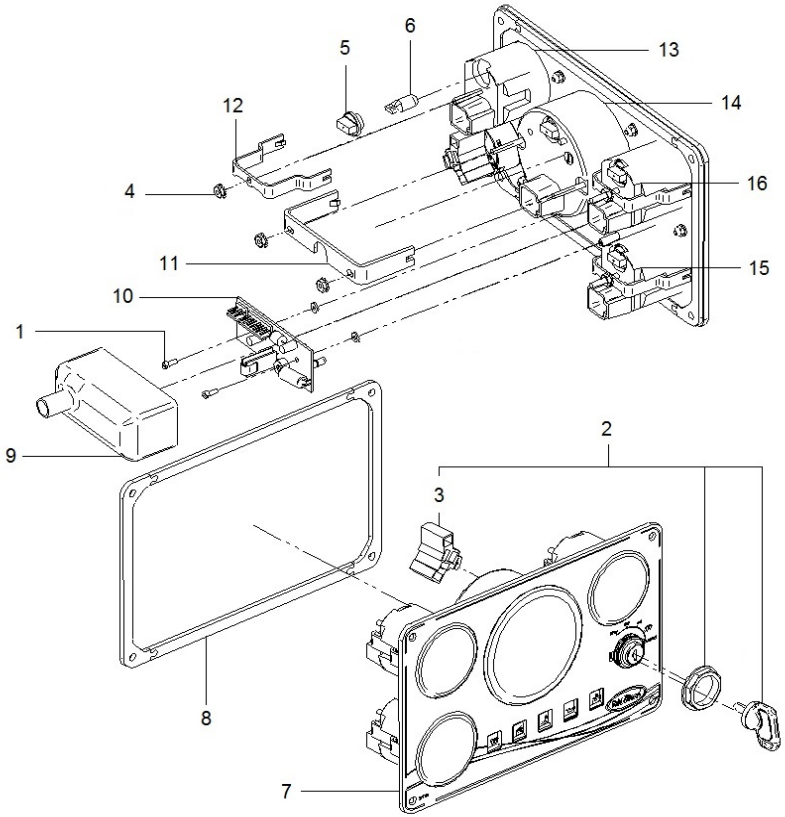

[NS] Not shown

Maintenance Kit

	13811100.4		Pipe Rubber Set,water line 4 V.		
FIG.	REF.	QTY	DESCR.	FROM	UPTO
1	13811017	1	Pipe 28-38-80		
2	13811017.1	1	Pipe 28-38-50		
3	13811022	1	SLEEVE Rubber		
4	M87501927	0,7	Water Intake Hose (HQ) D. 19-27		

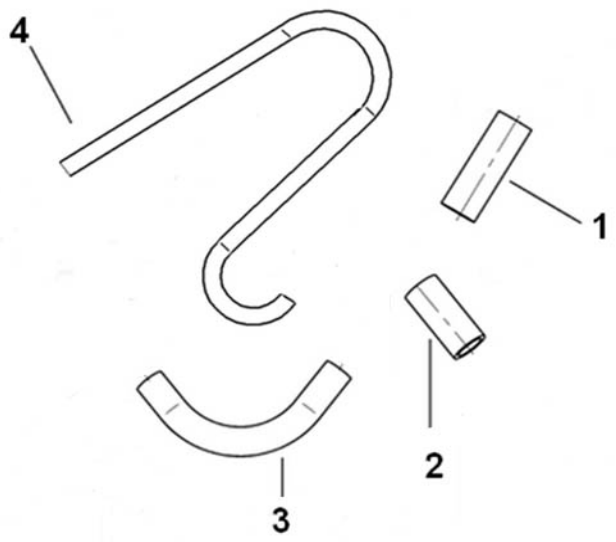

Maintenance Kit

D_13820101			Kit Gasket		
FIG.	REF.	QTY	DESCR.	FROM	UPTO
1	17121013	1	Gasket		
2	17620018.4	1	Gasket Front Plate [NP]		
3	17620016.4	1	Gasket Oil Seal C		
4	17620012.4	1	Gasket Cover		
5	17620040.4	1	Gasket Gear Case [NP]		
6	13820033.4	1	Gasket Oil PAN		
7	13821032.4	1	Gasket Intake COV		
8	17621022.4	1	Gasket Water Pump		
9	17621033.4	1	Gasket Thermostat		
10	17623014.4	1	Gasket Tie Rod CO		
11	17623033.4	1	Gasket Governor Cover [NP]		
12	13123021	1	O-Ring D. 7X1.8		
13	13821038	2	O-Ring D. 9X2		
14	13820044	2	O-Ring D. 11X2,5		
15	13721007	1	O-Ring D. 30X3		
16	13120032	2	Washer 18-23-1,5 [NP]		
17	17424025G.1	2	Gasket Fuel Return (Genset)		
18	13824013	2	Injector Washer		
19	13222054	4	Seal Valve Stem		
20	13821031	1	Gasket Water OutL		
21	13820002	4	Seal Side		
22	13821035	1	Gasket Exhaust Manifold		
23	13821004	1	Gasket Cylinder Head		
24	13821010	1	Gasket Rocker Cover		
25	13925031G	1	Washer,DRAIN Screw [NP]		
26	13825025.3	2	Washer [NP]		
27	13811007	2	O-Ring D. 57X2,5		
28	13813016.1	1	Gasket		
29	31211003	1	Gasket Cover		

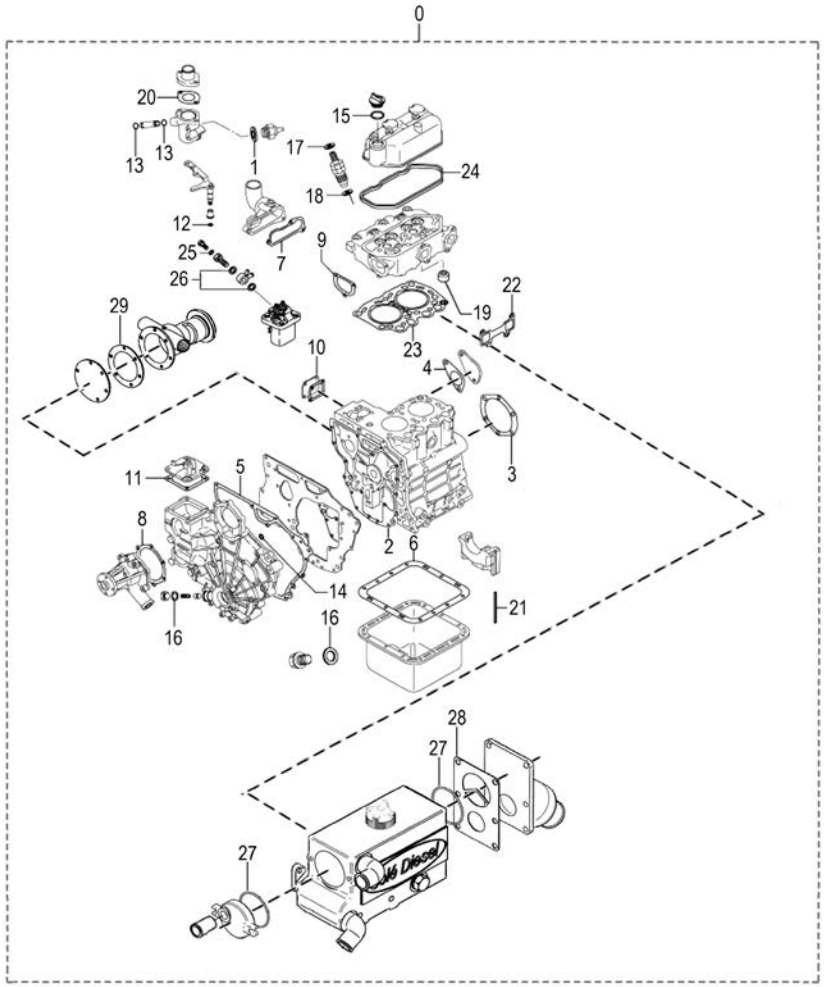

[NP] Not provided

Maintenance Kit

33811000K			Repair Kit Water Pump 1/2"		
FIG.	REF.	QTY	DESCR.	FROM	UPTO
1	31211008	1	1/2" Impeller		
2	31211003	1	Gasket Cover		
3	33411020	1	Seal		
4	33411019	1	Seal		
5	33311013	1	O-Ring D. 15X2		
NS	17011007	1	O-Ring D. 57X3 [NS]		

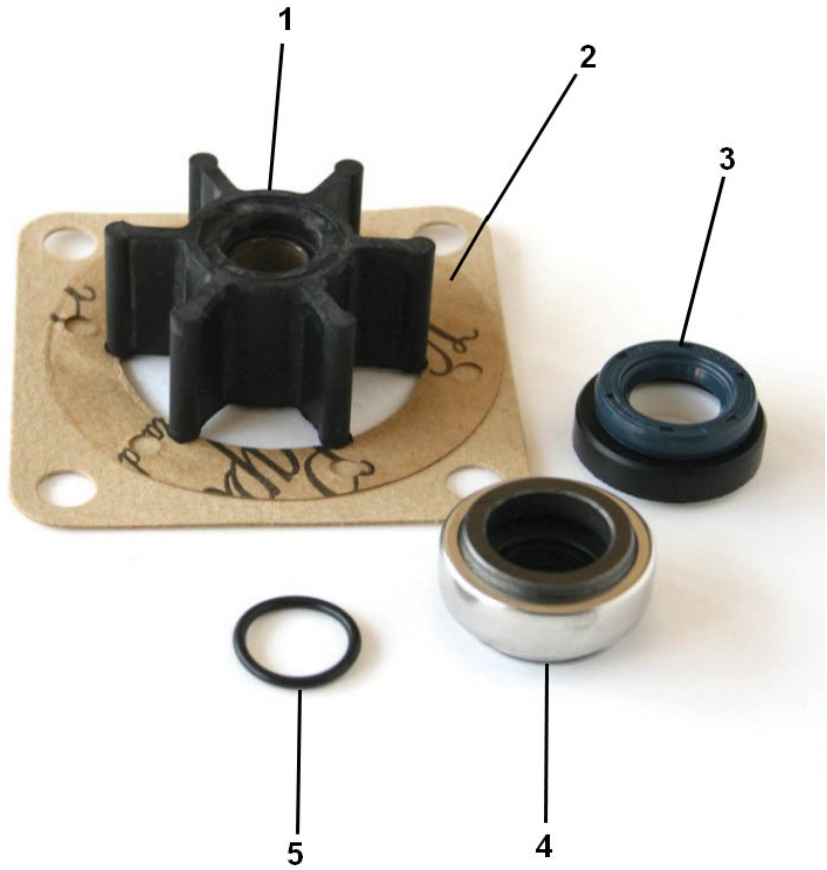

[NS] Not shown

Kit Gearbox

	13810007.4		Kit GearBox RONIM-5		
FIG.	**REF.**	**QTY**	**DESCR.**	**FROM**	**UPTO**
1	13822027.4.1	1	Flywheel		
2	13810049	1	Flywheel Supplement		
3	13810046	1	Flexible Coupling Type A SAE 6,5		
4	53033008	12	Washer GROWER DIN 127-8		
5	52102259	6	Bolt DIN 933 M8-30 8.8		
6	53038012	5	Washer DIN 6798-A 12		
7	53203357	5	Bolt DIN 912 M12-1,25-20 12.9		
8	52103257	2	Bolt DIN 912 M8-20 8.8		
9	13114004	1	Cover		
10	13114002	1	Gasket		
11	13810037	2	Support REAR		
12	53033010	6	Washer GROWER DIN 127-10		
13	52102309	6	Bolt DIN 933 M10-30 8.8		
14	52102257	4	Bolt DIN 933 M8-20 8.8		

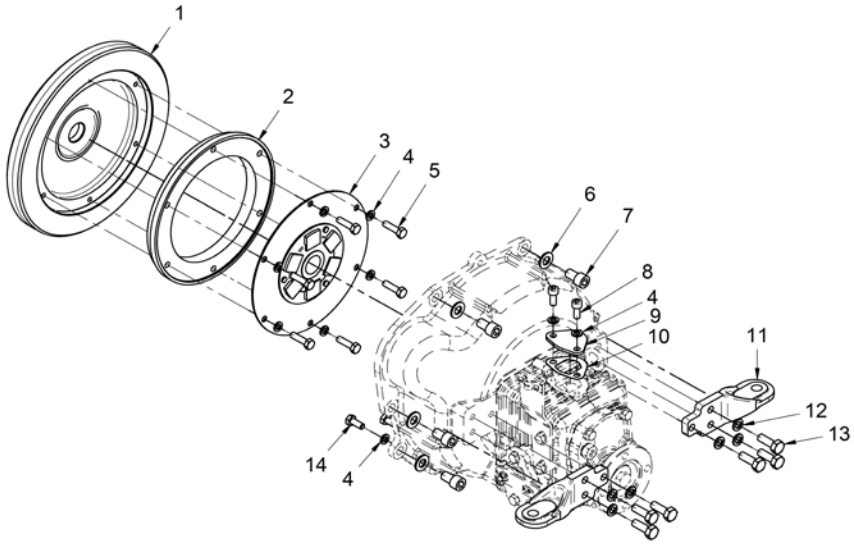

Kit Gearbox

13810100.4			Kit S-Drive VOLVO 120BS/120SC		
FIG.	**REF.**	**QTY**	**DESCR.**	**FROM**	**UPTO**
1	52102156	6	Bolt DIN 933 M6-16 8.8		
2	53033006	6	Washer GROWER DIN 127-6		
3	13810042	1	Flexible Coupling Type F D. 175 VULKAN		
4	17610022	1	Flywheel Supplement		
5	53033008	10	Washer GROWER DIN 127-8		
6	52102257	10	Bolt DIN 933 M8-20 8.8		
7	17610014	1	Engine Adaptor		
8	53038012	5	Washer DIN 6798-A 12		
9	53203357	5	Bolt DIN 912 M12-1,25-20 12.9		
10	51030010	6	Washer DIN 125-10		
11	52101311	6	Bolt DIN 931 M10-40 8.8		

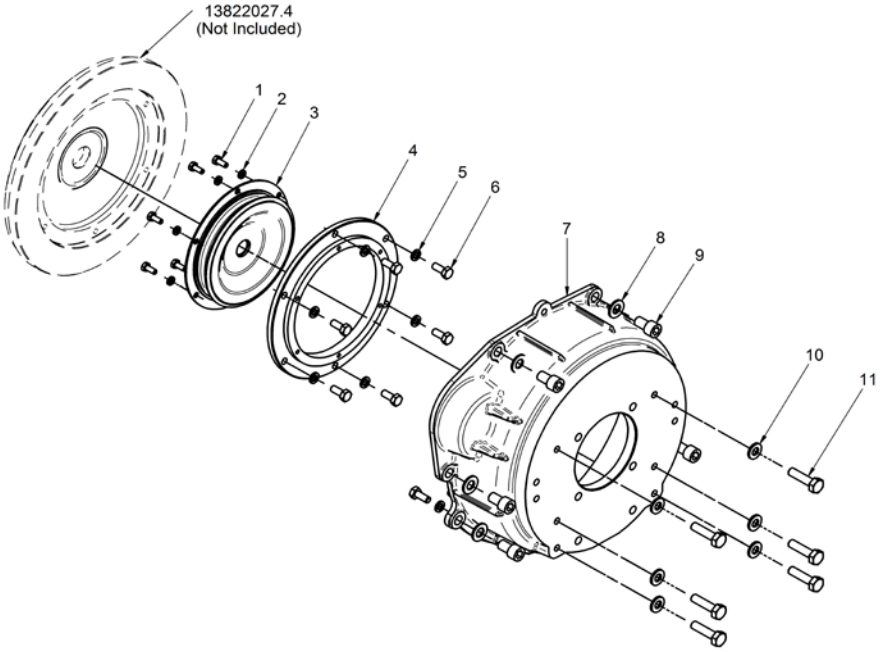

Kit Gearbox

13810101.4			Kit S-Drive VOLVO 120S		
FIG.	**REF.**	**QTY**	**DESCR.**	**FROM**	**UPTO**
1	13810051	1	Flywheel Supplement		
2	53033008	10	Washer GROWER DIN 127-8		
3	52101263	6	Bolt DIN 931 M8-50 8.8		
4	13810042	1	Flexible Coupling Type F D. 175 VULKAN		
5	53033006	6	Washer GROWER DIN 127-6		
6	52102156	6	Bolt DIN 933 M6-16 8.8		
7	52101316	6	Bolt DIN 931 M10-65 8.8		
8	53038010	6	Washer DIN 6798-A 10		
9	17610014	1	Engine Adaptor		
10	53038012	5	Washer DIN 6798-A 12		
11	53203357	5	Bolt DIN 912 M12-1,25-20 12.9		
12	13910016.1	1	Spacer, VOLVO Stern Drive 110S		
13	52120010	6	Nut DIN 934 M10 8.8		
14	52102257	4	Bolt DIN 933 M8-20 8.8		

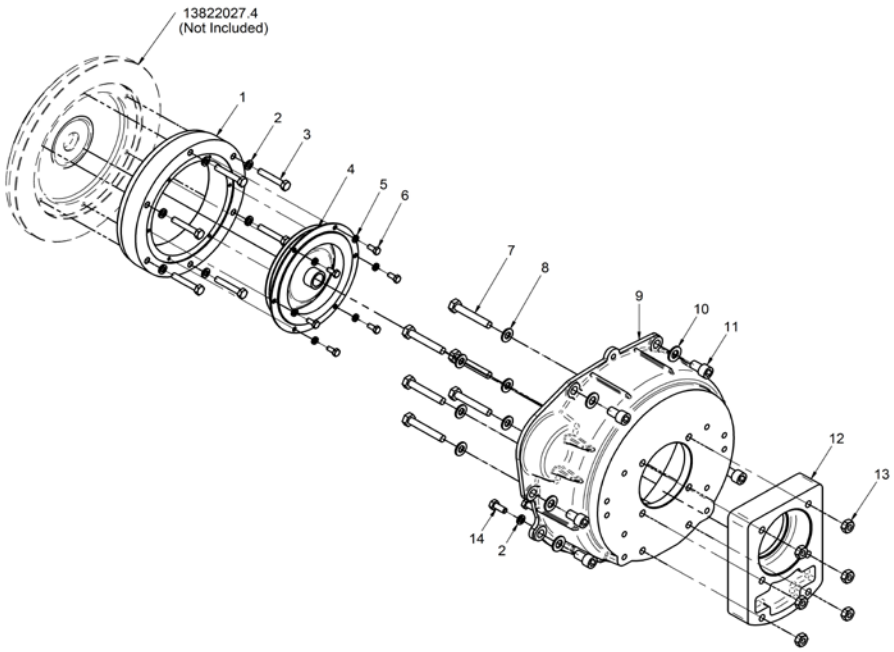

Kit Gearbox

13810102.4			Kit S-Drive VOLVO 100S		
FIG.	**REF.**	**QTY**	**DESCR.**	**FROM**	**UPTO**
1	13810018.4	1	Shaft (Cardan 100S)		
2	53033008	10	Washer GROWER DIN 127-8		
3	52102258	6	Bolt DIN 933 M8-25 8.8		
4	17610015	1	Engine Adaptor		
5	53038012	5	Washer DIN 6798-A 12		
6	53203357	5	Bolt DIN 912 M12-1,25-20 12.9		
7	13810037.1	2	Support REAR	08/10/2014	
8	52103309	4	Bolt DIN 912 M10-30 8.8		
9	53033010	4	Washer GROWER DIN 127-10		
10	52102257	4	Bolt DIN 933 M8-20 8.8		

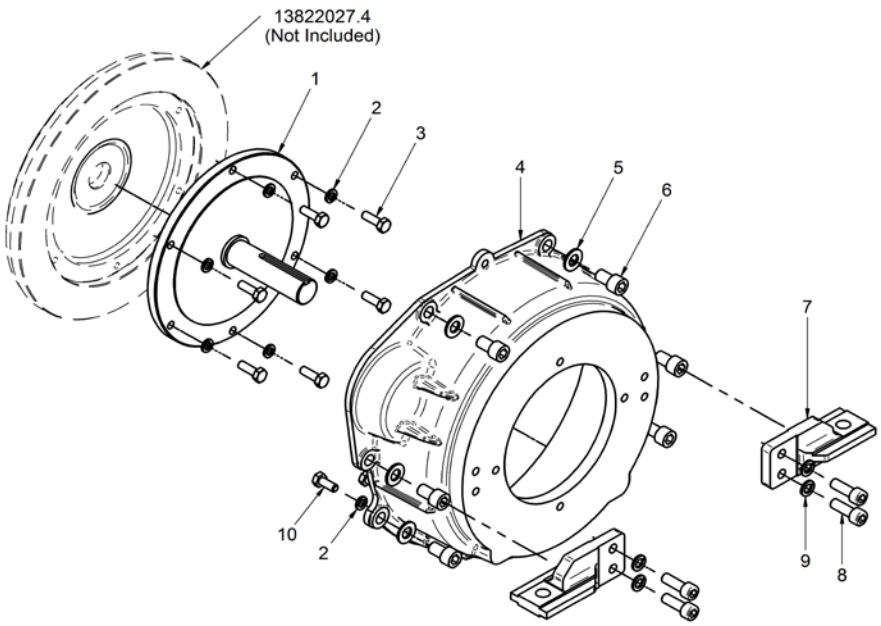

Kit Gearbox

13810103.4			Kit S-Drive SD20 YANMAR		
FIG.	**REF.**	**QTY**	**DESCR.**	**FROM**	**UPTO**
1	13810047	1	Flywheel Supplement		
2	53033008	16	Washer GROWER DIN 127-8		
3	52101264	6	Bolt DIN 931 M8-55 8.8		
4	52102257	10	Bolt DIN 933 M8-20 8.8		
5	17610016	1	Engine Adaptor SAE7		
6	53038012	5	Washer DIN 6798-A 12		
7	53203357	5	Bolt DIN 912 M12-1,25-20 12.9		
8	13810045	1	Adaptor SAE6 TO SAE7		
9	52103308	6	Bolt DIN 912 M10-25 8.8		
10	53038008	8	Washer DIN 6798-A 8		
11	52102259	8	Bolt DIN 933 M8-30 8.8		

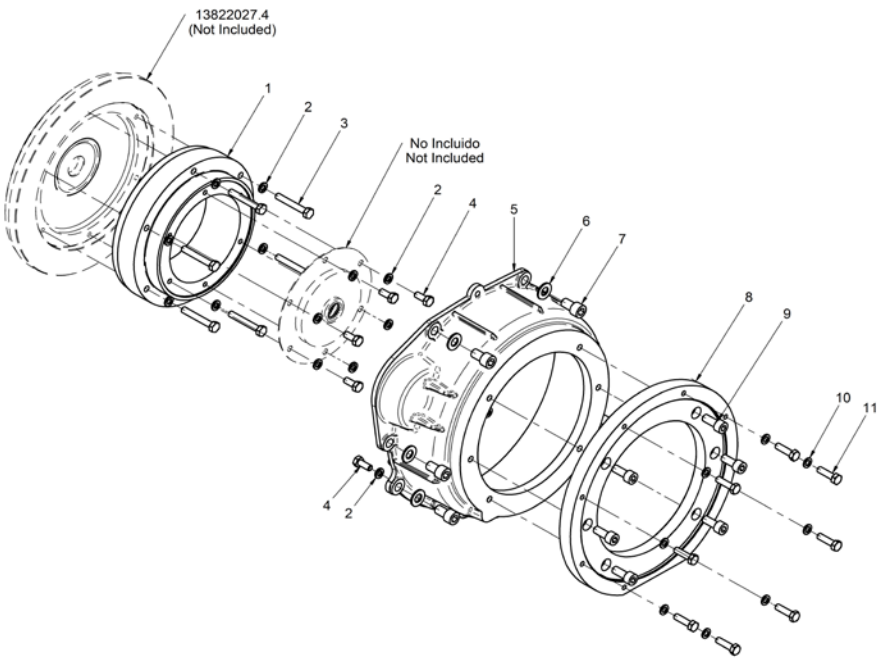

Kit Gearbox

13810104.4			Kit S-Drive VOLVO 130S		
FIG.	**REF.**	**QTY**	**DESCR.**	**FROM**	**UPTO**
1	13810049	1	Flywheel Supplement		
2	13810046	1	Flexible Coupling Type A SAE 6,5		
3	53033008	10	Washer GROWER DIN 127-8		
4	52101259	6	Bolt DIN 931 M8-30 8.8		
5	17610014	1	Engine Adaptor		
6	53038012	5	Washer DIN 6798-A 12		
7	53203357	5	Bolt DIN 912 M12-1,25-20 12.9		
8	51030010	6	Washer DIN 125-10		
9	52101311	6	Bolt DIN 931 M10-40 8.8		
10	52102257	4	Bolt DIN 933 M8-20 8.8		

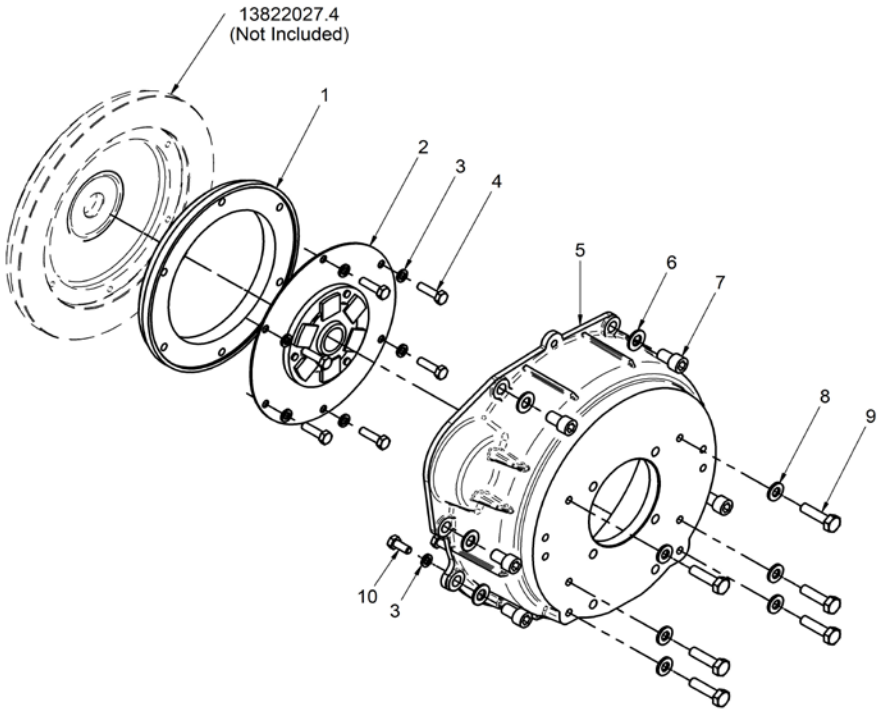

Kit Gearbox

13810105.4			Kit GearBox VOLVO MS-2 & MS-2B		
FIG.	**REF.**	**QTY**	**DESCR.**	**FROM**	**UPTO**
1	52102156	6	Bolt DIN 933 M6-16 8.8		
2	53033006	6	Washer GROWER DIN 127-6		
3	13810042	1	Flexible Coupling Type F D. 175 VULKAN		
4	17610022	1	Flywheel Supplement		
5	53033008	10	Washer GROWER DIN 127-8		
6	52102257	10	Bolt DIN 933 M8-20 8.8		
7	52102309	6	Bolt DIN 933 M10-30 8.8		
8	53038010	6	Washer DIN 6798-A 10		
9	17610014	1	Engine Adaptor		
10	53038012	5	Washer DIN 6798-A 12		
11	53203357	5	Bolt DIN 912 M12-1,25-20 12.9		
12	13810037.1	2	Support REAR	08/10/2014	
13	52103309	4	Bolt DIN 912 M10-30 8.8		
14	53033010	4	Washer GROWER DIN 127-10		

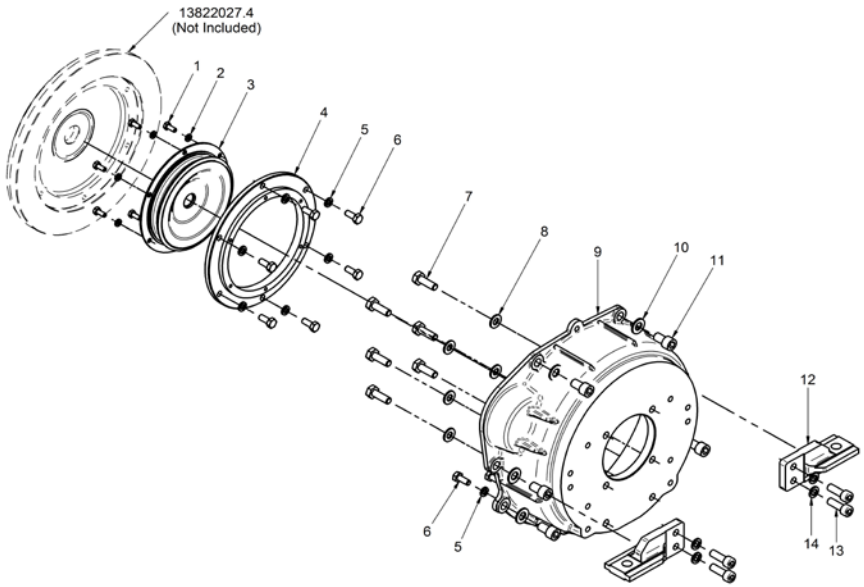

Kit Gearbox

13810107.4			Kit GearBox TMC-40P 4/5 V.		
FIG.	**REF.**	**QTY**	**DESCR.**	**FROM**	**UPTO**
1	13810049	1	Flywheel Supplement		
2	13810046	1	Flexible Coupling Type A SAE 6,5		
3	53033008	12	Washer GROWER DIN 127-8		
4	52102259	6	Bolt DIN 933 M8-30 8.8		
5	52102258	6	Bolt DIN 933 M8-25 8.8	12/03/2015	
6	53038008	6	Washer DIN 6798-A 8		
7	17610013	1	Engine adaptor		
8	53038012	5	Washer DIN 6798-A 12		
9	53203357	5	Bolt DIN 912 M12-1,25-20 12.9		
10	13810037	2	Support REAR		
11	53033010	6	Washer GROWER DIN 127-10		
12	52103309	6	Bolt DIN 912 M10-30 8.8		
13	24810901	1	Bracket, GearBox Control		
14	51030005	2	Washer DIN 125-5		
15	24810913	1	Clamp,CABLE		
16	51030008	2	Washer DIN 125-8		
17	52120008	2	Nut DIN 934 M8 8.8		
18	14719115	1	Coupling,cable		
19	51030006	1	Washer DIN 125-6		
20	51051107	1	Pin DIN-94 1,6-16		
21	52102257	4	Bolt DIN 933 M8-20 8.8		

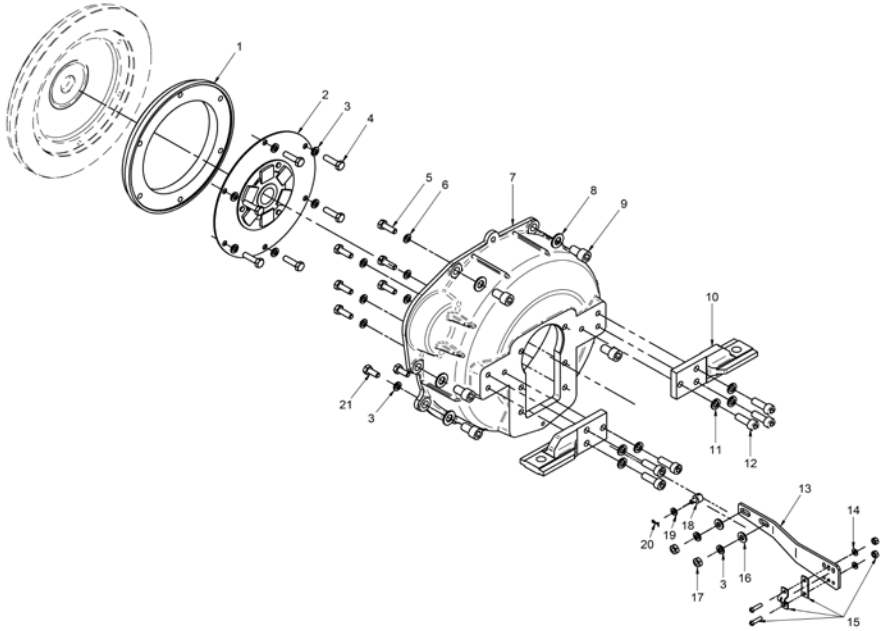

Kit Gearbox

13810111			Kit S-Drive VOLVO 110S		
FIG.	**REF.**	**QTY**	**DESCR.**	**FROM**	**UPTO**
1	52101259	6	Bolt DIN 931 M8-30 8.8		
2	53033008	16	Washer GROWER DIN 127-8		
3	13810021	1	Spacer, VOLVO Stern Drive 110S		
4	52102258	6	Bolt DIN 933 M8-25 8.8		
5	17610021	1	Coupling, Drive		
6	17610016	1	Engine Adaptor SAE7		
7	53038012	5	Washer DIN 6798-A 12		
8	53203357	5	Bolt DIN 912 M12-1,25-20 12.9		
9	13810016	1	Spacer,VOLVO Stern Drive ADAP.110S		
10	53033010	12	Washer GROWER DIN 127-10		
11	52102308	6	Bolt DIN 933 M10-25 8.8		
12	52101310	6	Bolt DIN 931 M10-35 8.8		
13	52102257	4	Bolt DIN 933 M8-20 8.8		

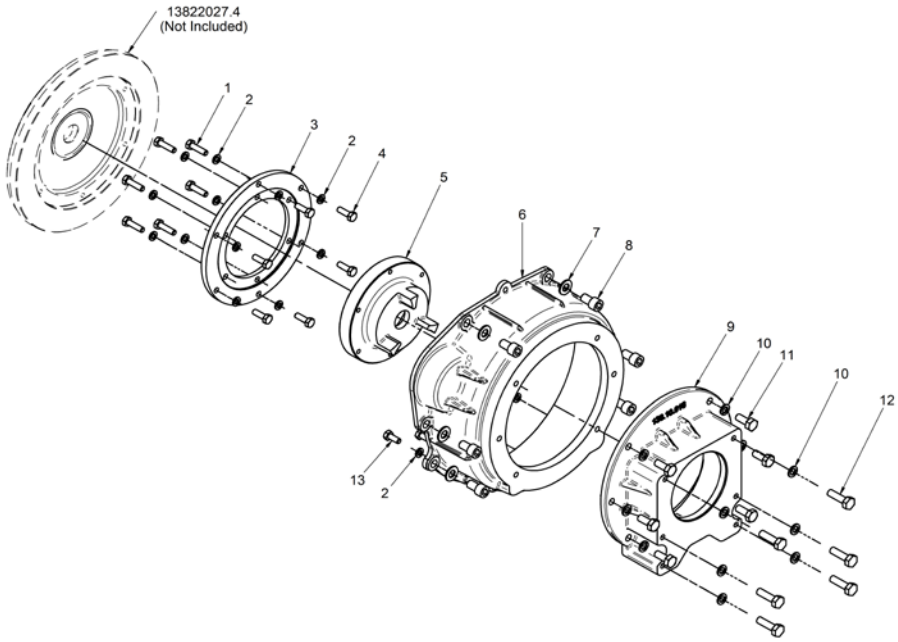

Kit Gearbox

13810125.4			Kit S-Drive BUKH DV10 & DV20		
FIG.	**REF.**	**QTY**	**DESCR.**	**FROM**	**UPTO**
1	13810025.4	1	Shaft		
2	53033008	10	Washer GROWER DIN 127-8		
3	52102258	6	Bolt DIN 933 M8-25 8.8		
4	17310027	1	KEY		
5	13910027	1	Washer		
6	52102309	1	Bolt DIN 933 M10-30 8.8		
7	17610016	1	Engine Adaptor SAE7		
8	53038012	5	Washer DIN 6798-A 12		
9	53203357	5	Bolt DIN 912 M12-1,25-20 12.9		
10	13910026	1	BUKH S-Drive DV-20 Adaptor Flange		
11	53033010	6	Washer GROWER DIN 127-10		
12	52102308	6	Bolt DIN 933 M10-25 8.8		
13	12110018	1	Stud		
14	53038008	1	Washer DIN 6798-A 8		
15	52120008	1	Nut DIN 934 M8 8.8		
16	16511007	6	Stud		
17	53038010	6	Washer DIN 6798-A 10		
18	52120010	6	Nut DIN 934 M10 8.8		
19	52102257	4	Bolt DIN 933 M8-20 8.8		

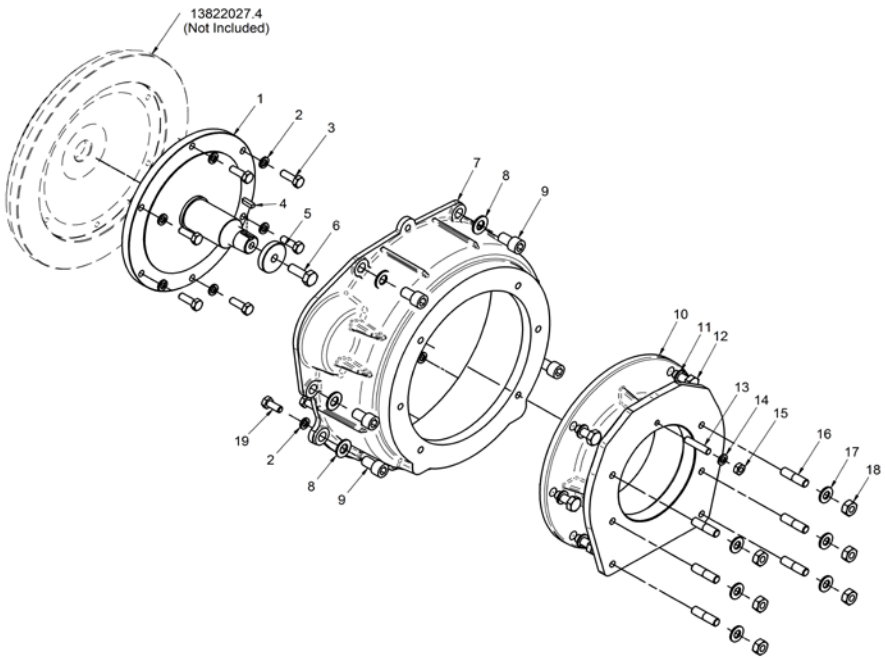

Kit Gearbox

13810127.4			Kit Bobtail SAE-7		
FIG.	**REF.**	**QTY**	**DESCR.**	**FROM**	**UPTO**
1	13810038	2	Support	14/11/2014	
2	13810039	2	Support		
3	53033010	4	Washer GROWER DIN 127-10		
4	52203308	4	Bolt DIN 912 M10-1,25-25 12.9		
5	17610016	1	Engine Adaptor SAE7		
6	53038012	5	Washer DIN 6798-A 12		
7	53203357	5	Bolt DIN 912 M12-1,25-20 12.9		
8	52102257	4	Bolt DIN 933 M8-20 8.8		
9	53033008	4	Washer GROWER DIN 127-8		

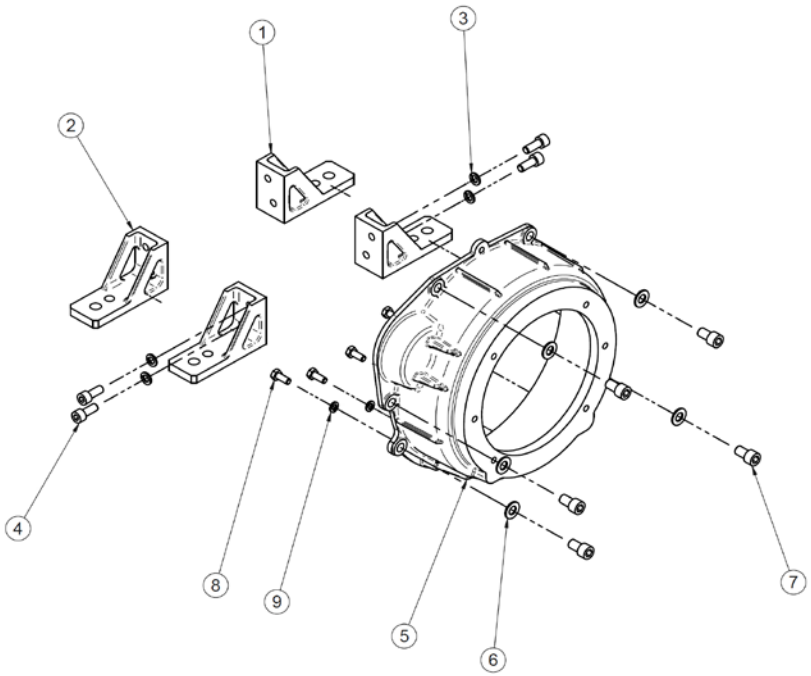

Kit Gearbox

	13810240.4		Kit Bobtail		
FIG.	**REF.**	**QTY**	**DESCR.**	**FROM**	**UPTO**
1	13810038	2	Support		
2	13810039	2	Support		
3	53033010	4	Washer GROWER DIN 127-10		
4	52203308	4	Bolt DIN 912 M10-1,25-25 12.9		

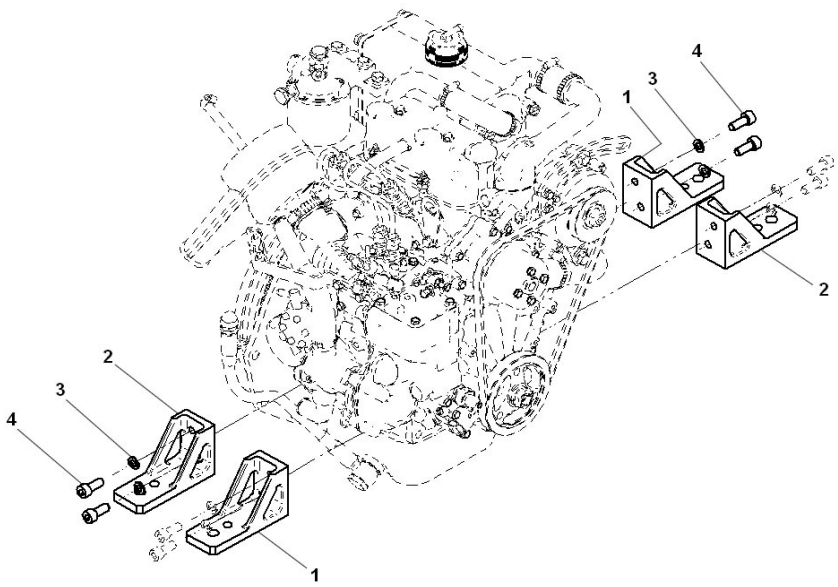

Kit Gearbox

13810241			Kit GearBox TMC-60 MINI-17		
FIG.	**REF.**	**QTY**	**DESCR.**	**FROM**	**UPTO**
1	13810049	1	Flywheel Supplement		
2	13810046	1	Flexible Coupling Type A SAE 6,5		
3	53033008	12	Washer GROWER DIN 127-8		
4	52102259	6	Bolt DIN 933 M8-30 8.8		
5	52101259	6	Bolt DIN 931 M8-30 8.8		
6	53038008	6	Washer DIN 6798-A 8		
7	17610013	1	Engine adaptor		
8	53038012	5	Washer DIN 6798-A 12		
9	53203357	5	Bolt DIN 912 M12-1,25-20 12.9		
10	13810037.1	2	Support REAR	08/10/2014	
11	52103309	4	Bolt DIN 912 M10-30 8.8		
12	53033010	4	Washer GROWER DIN 127-10		
13	24880901	1	Bracket, GearBox Control		
14	51030005	2	Washer DIN 125-5		
15	24810913	1	Clamp,CABLE		
16	51030008	2	Washer DIN 125-8		
17	52102257	6	Bolt DIN 933 M8-20 8.8		
18	51051107	1	Pin DIN-94 1,6-16		
19	51030006	4	Washer DIN 125-6		
20	ALLPA.93	1	Coupling,cable	23/05/2017	
20	14719115	1	Coupling,cable		23/05/2017

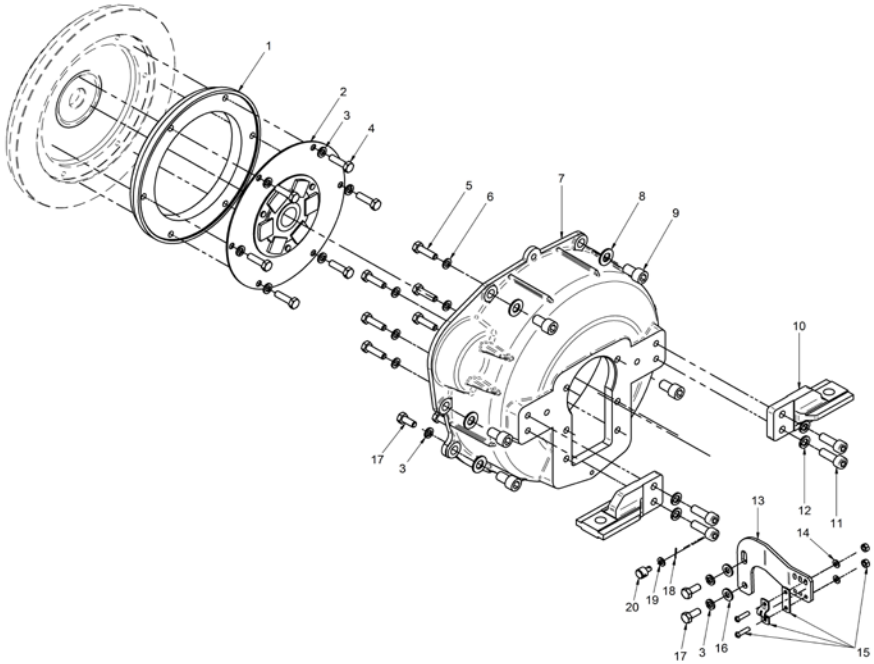

Kit Gearbox

13832100.4			Kit S-Drive SELVA		
FIG.	**REF.**	**QTY**	**DESCR.**	**FROM**	**UPTO**
1	13810049	1	Flywheel Supplement		
2	13810046	1	Flexible Coupling Type A SAE 6,5		
3	53033008	10	Washer GROWER DIN 127-8		
4	52102259	6	Bolt DIN 933 M8-30 8.8		
5	52101263	6	Bolt DIN 931 M8-50 8.8		
6	53038008	6	Washer DIN 6798-A 8		
7	17610013	1	Engine adaptor		
8	53038012	5	Washer DIN 6798-A 12		
9	53203357	5	Bolt DIN 912 M12-1,25-20 12.9		
10	52120008	6	Nut DIN 934 M8 8.8		
11	52102257	4	Bolt DIN 933 M8-20 8.8		

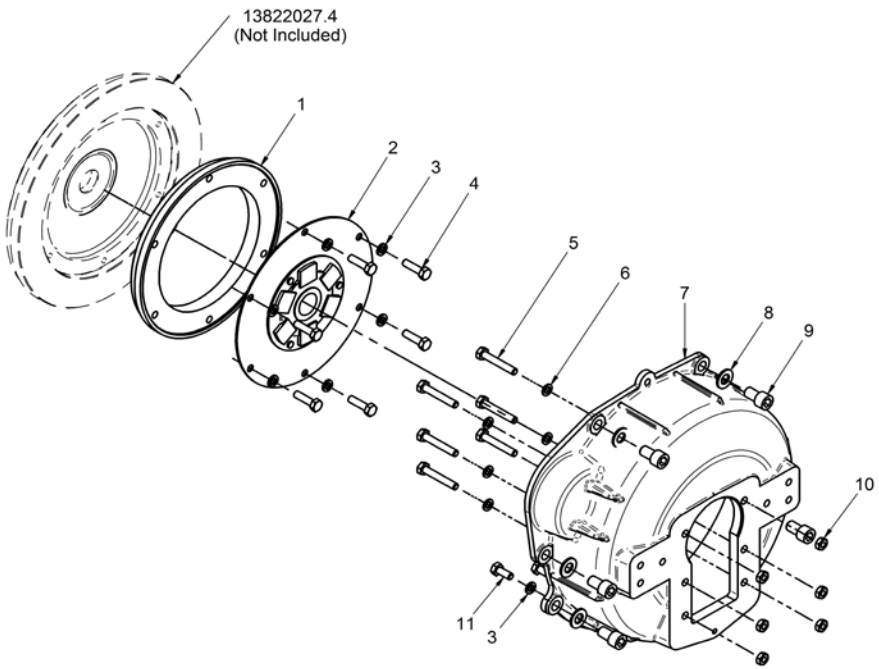

Kit Gearbox

13832100A.4			Kit GearBox TMC/ZF/PRM		
FIG.	**REF.**	**QTY**	**DESCR.**	**FROM**	**UPTO**
1	13810049	1	Flywheel Supplement		
2	13810046	1	Flexible Coupling Type A SAE 6,5		
3	53033008	10	Washer GROWER DIN 127-8		
4	52102259	6	Bolt DIN 933 M8-30 8.8		
5	52101259	6	Bolt DIN 931 M8-30 8.8		
6	53038008	6	Washer DIN 6798-A 8		
7	17610013	1	Engine adaptor		
8	53038012	5	Washer DIN 6798-A 12		
9	53203357	5	Bolt DIN 912 M12-1,25-20 12.9		
10	13810037	2	Support REAR	05/12/2014	
11	53033010	6	Washer GROWER DIN 127-10		
12	52103309	6	Bolt DIN 912 M10-30 8.8		
13	52102257	4	Bolt DIN 933 M8-20 8.8		

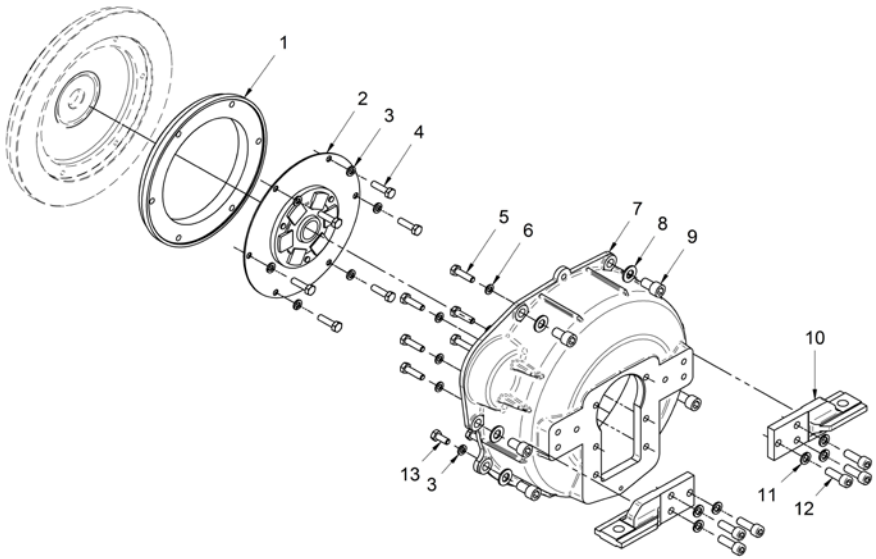

Kit Gearbox

13832100T.4			Kit S-Drive TECHNO.SP60		
FIG.	**REF.**	**QTY**	**DESCR.**	**FROM**	**UPTO**
1	13810049	1	Flywheel Supplement		
2	13810046	1	Flexible Coupling Type A SAE 6,5		
3	53033008	10	Washer GROWER DIN 127-8		
4	52102259	6	Bolt DIN 933 M8-30 8.8		
6	53033012	1	Washer GROWER DIN 127-12		
7	17610016	1	Engine Adaptor SAE7		
8	53038012	4	Washer DIN 6798-A 12		
9	53203358	1	Bolt DIN 912 M12-1,25-25 12.9		
10	52102309	14	Bolt DIN 933 M10-30 8.8		
11	53038010	16	Washer DIN 6798-A 10		
12	24813501	1	BW Bell Housing		
13	51051107	1	Pin DIN-94 1,6-16		
14	51030006	1	Washer DIN 125-6		
15	14719115	1	Coupling,cable		
16	24810913	1	Clamp,CABLE		
17	51030005	2	Washer DIN 125-5		
18	52101313	2	Bolt DIN 931 M10-50 8.8		
19	53038008	11	Washer DIN 6798-A 8		
20	52101263	8	Bolt DIN 931 M8-50 8.8		
21	40019030	3	Stud		
22	52120008	3	Nut DIN 934 M8 8.8		
23	53203357	4	Bolt DIN 912 M12-1,25-20 12.9		
24	52102257	4	Bolt DIN 933 M8-20 8.8		
NS	M87501927	1	Water Intake Hose (HQ) D. 19-27 [NS]		
NS	13211035	1	Exhaust Manifold Outlet Bend [NS]		
NS	17211036	1	Raccord [NS]		
NS	54081020	2	Clamp DIN 3017 20-32/9 W4 [NS]		
NS	58088283	2	Pastic Cable Zip Tie [NS]	27/02/2014	
NS	60121005	1	Water Trainer 1/2" [NS]		

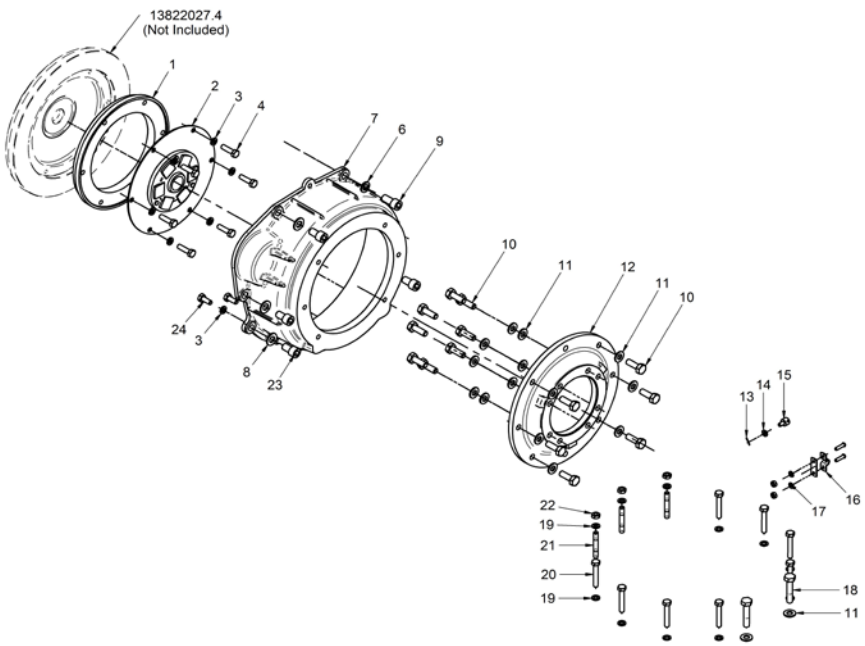

[NS] Not shown

Kit Gearbox

17610230			Kit GearBox ZF 15 MIV 4 V.		
FIG.	**REF.**	**QTY**	**DESCR.**	**FROM**	**UPTO**
1	13810046	1	Flexible Coupling Type A SAE 6,5		
2	53033008	12	Washer GROWER DIN 127-8		
3	52102256	6	Bolt DIN 933 M8-15 8.8		
4	52102308	6	Bolt DIN 933 M10-25 8.8		
5	53038010	6	Washer DIN 6798-A 10		
6	17610017	1	Engine Adaptor		
7	53038012	5	Washer DIN 6798-A 12		
8	53203357	5	Bolt DIN 912 M12-1,25-20 12.9		
9	13810010.2	1	Rear, Bracket		21/08/2017
9	13810037.2	1	Rear, Bracket	21/08/2017	
10	51030008	2	Washer DIN 125-8		
11	52120008	2	Nut DIN 934 M8 8.8		
12	51051107	1	Pin DIN-94 1,6-16		
13	51030006	4	Washer DIN 125-6		
14	ALLPA.93	1	Coupling,cable	23/05/2017	
14	14719115	1	Coupling,cable		23/05/2017
15	24810913	1	Clamp,CABLE		
16	24610901	1	Bracket, GearBox Control		
17	52105307	2	Bolt DIN 7991 M10-20 10.9		
18	52102309	4	Bolt DIN 933 M10-30 8.8		
19	53033010	4	Washer GROWER DIN 127-10		
20	13810010.3	1	Rear, Bracket		21/08/2017
20	13810037.3	1	Rear, Bracket	21/08/2017	
21	52102257	4	Bolt DIN 933 M8-20 8.8		
22	51030005	2	Washer DIN 125-5		

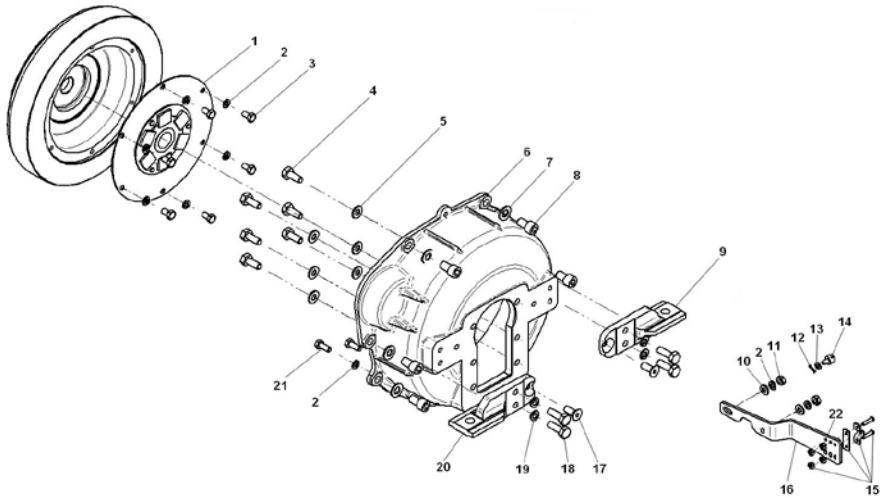

Instruments Panels

13817215.2			Price Supplement Panel TE3 MINI-17/29		
FIG.	REF.	QTY	DESCR.	FROM	UPTO
1	60938127.2	1	Panel TE3 MINI-17/29		
2	13817051	1	Sender Holder		
3	60900985	1	Pressure Sensor		
4	TFH.1M.6.3.08	1	Straight Receptacle 1 Sec. Faston	09/06/2015	
5	60900063	1	Insulator Cap Faston 6.3		

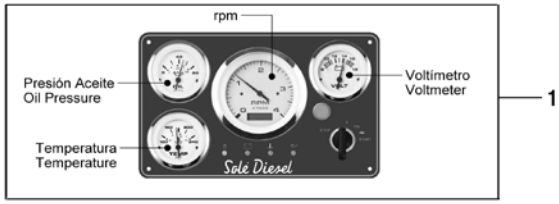

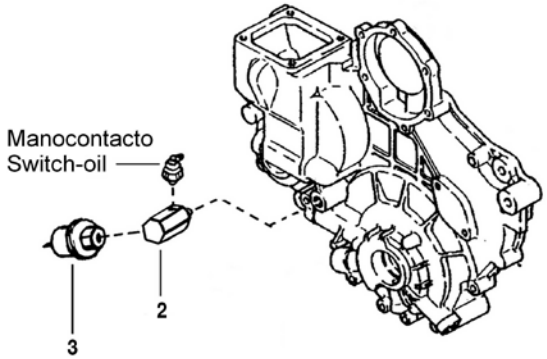

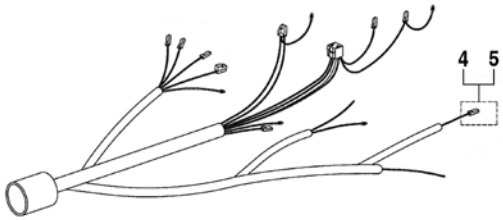

Instruments Panels

60938000RD			Kit 2nd Panel TE4 MINI-17/29 12V		
FIG.	REF.	QTY	DESCR.	FROM	UPTO
1	60938125.2	1	Panel TE2 MINI-17/29		
2	60938126.2	1	Panel TE4 MINI-17/29		
3	60900210.2	1	T Double Panel DERIVATION		

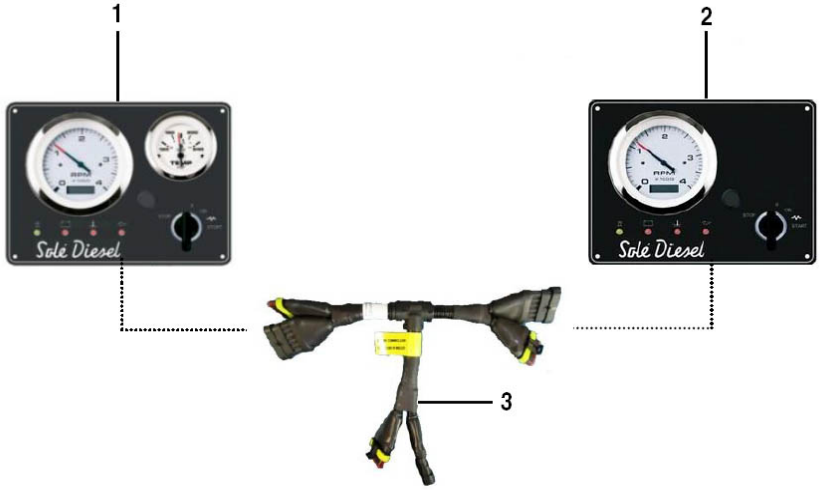

	13817110		Kit 2nd Alternator 28V/55A		
FIG.	REF.	QTY	DESCR.	FROM	UPTO
1	13110202	1	Pulley 2A (S)		
2	13817111	1	2nd Alternator Bracket		
3	13810034	1	Front Bracket		
4	13810033	1	Front Bracket		
5	13817112	1	Strap, Alternator		
6	51030010	3	Washer DIN 125-10		
7	52101326	1	Bolt DIN 931 M10-130 8.8		
8	53033010	1	Washer GROWER DIN 127-10		
9	52120010	1	Nut DIN 934 M10 8.8		
10	17217102.6	1	Belt Type AX 21		
14	17417024	1	Alternator 28V/55A		
15	51123010	1	Nut DIN 985 M10 5.6		
16	52102308	1	Bolt DIN 933 M10-25 8.8		
17	17417022	1	Pulley		
18	13817113	1	Spacer 8,5X25X12		
19	53033008	4	Washer GROWER DIN 127-8		
20	52102259	2	Bolt DIN 933 M8-30 8.8		
21	52203310	4	Bolt DIN 912 M10-1,25-35 12.9		
22	51030018	1	Washer DIN 125-18		
23	18017021	1	PAN,alternator L.H.		
NS	52120008	2	Nut DIN 934 M8 8.8 [NS]		

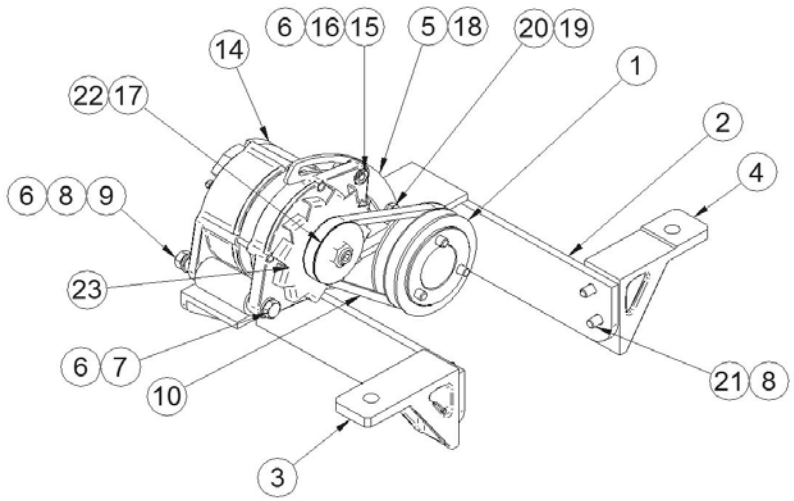

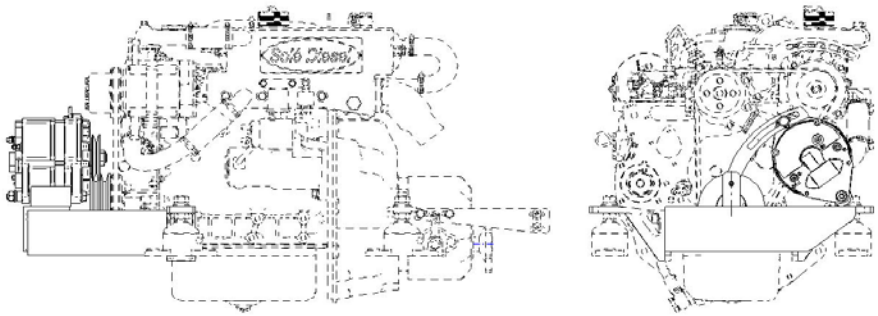

[NS] Not shown

	17617100		Kit 2nd Alternator 14V/90A		
FIG.	REF.	QTY	DESCR.	FROM	UPTO
1	13110202	1	Pulley 2A (S)		
2	13810005.1	1	Right, front bracket	09/10/2015	
3	13810006.1	1	Left, front bracket	09/10/2015	
4	17217019	1	Alternator 14V/90A		
5	17417020	1	Pulley Alternator		
6	17617100.1	1	Alternator Bracket		
7	17617100.2	1	Strap, Alternator		
8	51030006	4	Washer DIN 125-6		
9	51030008	1	Washer DIN 125-8		
10	51030010	2	Washer DIN 125-10		
11	51035010	1	Washer DIN 433 10		
12	52101326	1	Bolt DIN 931 M10-130 8.8		
13	52102158	2	Bolt DIN 933 M6-25 8.8		
14	52102259	1	Bolt DIN 933 M8-30 8.8		
15	52120006	2	Nut DIN 934 M6 8.8		
16	52120008	1	Nut DIN 934 M8 8.8		
17	52120010	1	Nut DIN 934 M10 8.8		
18	52203310	4	Bolt DIN 912 M10-1,25-35 12.9		
19	53033006	2	Washer GROWER DIN 127-6		
20	53033008	1	Washer GROWER DIN 127-8		
21	53033010	5	Washer GROWER DIN 127-10		
NS	17217100G	1	Belt Type [NS]		

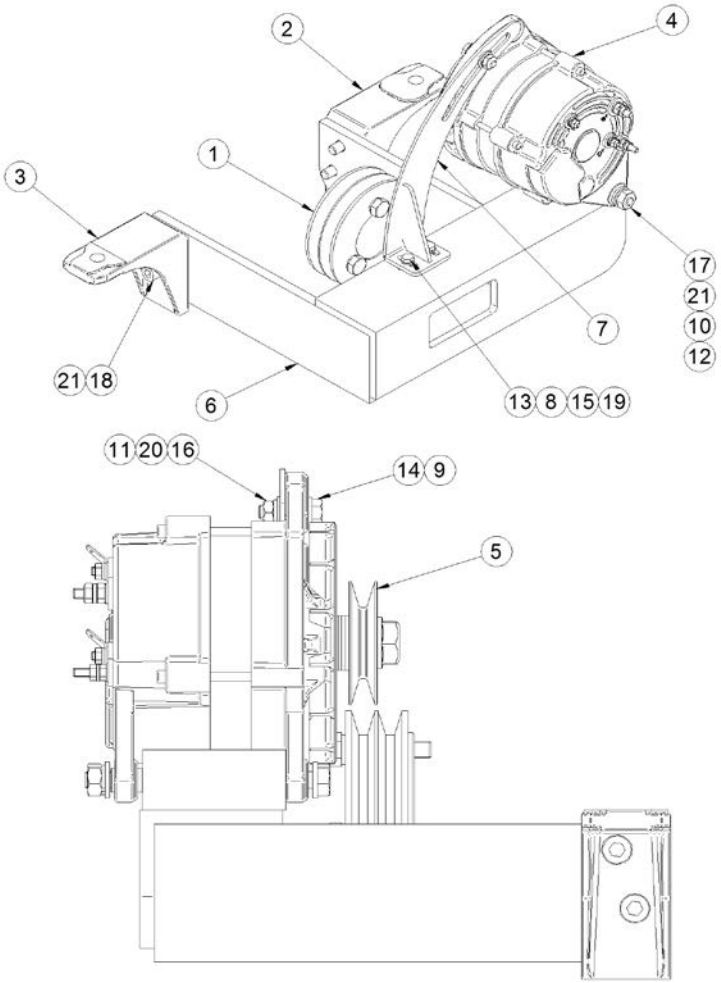

[NS] Not shown

17617200			Kit Wire Earth Isolated Alternator 14V/7		
FIG.	REF.	QTY	DESCR.	FROM	UPTO
1	19017104	1	Relay 12 V. Bipolar		
2	13817107	1	SUPORT RELAIS	21/01/2000	
3	51030010	2	Washer DIN 125-10		
4	52202307	2	Bolt DIN 933 M10-1,25-20 8.8		
5	51030006	4	Washer DIN 125-6		
6	52102154	2	Bolt DIN 933 M6-10 8.8	26/11/2005	
7	13019001	2	Clamp		
8	60900978	1	Switch, Oil Press		
9	56000069	1	Washer 14-20-1,5		
10	60900999	2	Connection M14X1,5 5/8" EXA.22 L=22		
11	60900982	1	Temperature SENDER		
12	56000073	2	Copper Washer 16-23-1,5		
13	60900972	1	High Coolant, 2 Poles		
14	14419023	1	Ball JOINT		
16	15119015	1	CABLE Holder Ball		
17	13817012B	1	Alt. 14V/75A		
18	17117052	1	Oil Pressure Sensor Adaptor	29/09/2015	
19	51031008	2	Washer DIN 9021 8		
20	52102260	1	Bolt DIN 933 M8-35 8.8		
21	52102158	1	Bolt DIN 933 M6-25 8.8		
23	52120008	2	Nut DIN 934 M8 8.8		
24	13017013	2	Bracket Bakelit Bushing		
25	17217012	2	Tensor Bakelite Bushing		
26	13817114	1	Spacer 8,5X25X19		
27	51030008	2	Washer DIN 125-8		
NS	17417010	2	Bakelite Bushing [NS]		
NS	17417014	2	Washer [NS]		
NS	52102155	2	Bolt DIN 933 M6-12 8.8 [NS]		
NS	52120005	1	Nut DIN 934 M5 8.8 [NS]		
NS	53033006	2	Washer GROWER DIN 127-6 [NS]		
NS	58088284	1	Pastic Cable Zip Tie [NS]		
NS	58088285	1	Pastic Cable Zip Tie [NS]		
NS	60900126	1	TERMINAL [NS]		
NS	60900130	1	Flag Receptable Faston Terminal [NS]		
NS	60900131	1	Insulation Flag Protective [NS]		

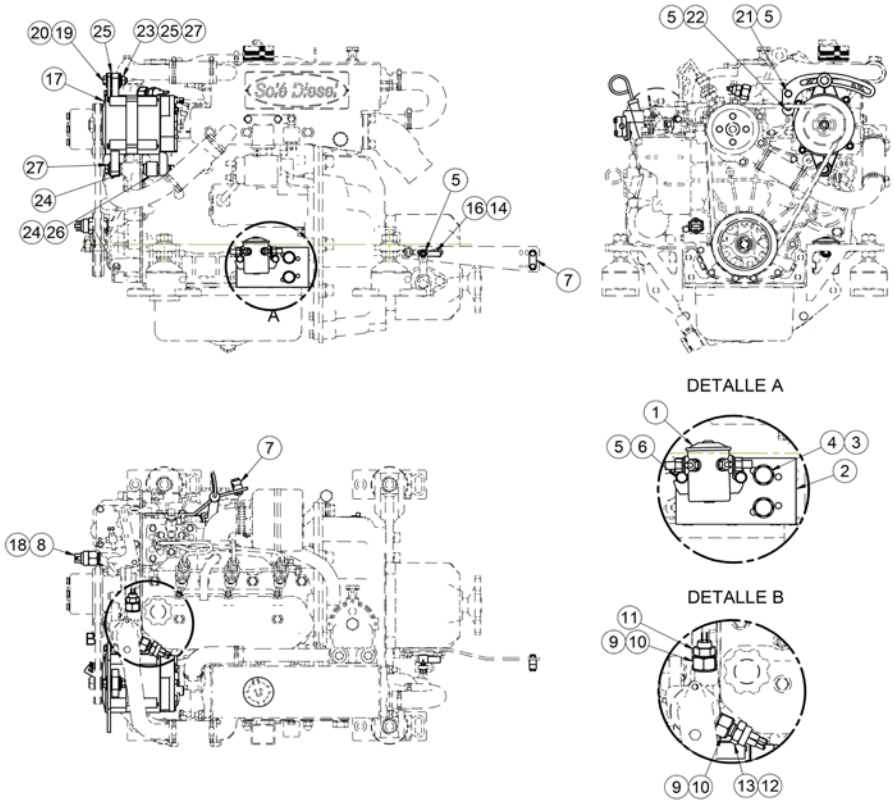

[NS] Not shown

17617200			Kit Wire Earth Isolated Alternator 14V/7		
FIG.	REF.	QTY	DESCR.	FROM	UPTO
NS	60900150	1	Wire [NS]		
NS	60900154	1	Wire [NS]		
NS	60938202R.2	1	MINI-17/29 E. Wiring EARTH ISOLATED [NS]		
NS	60939048	1	MASS BLACK TO Wiring START [NS]		

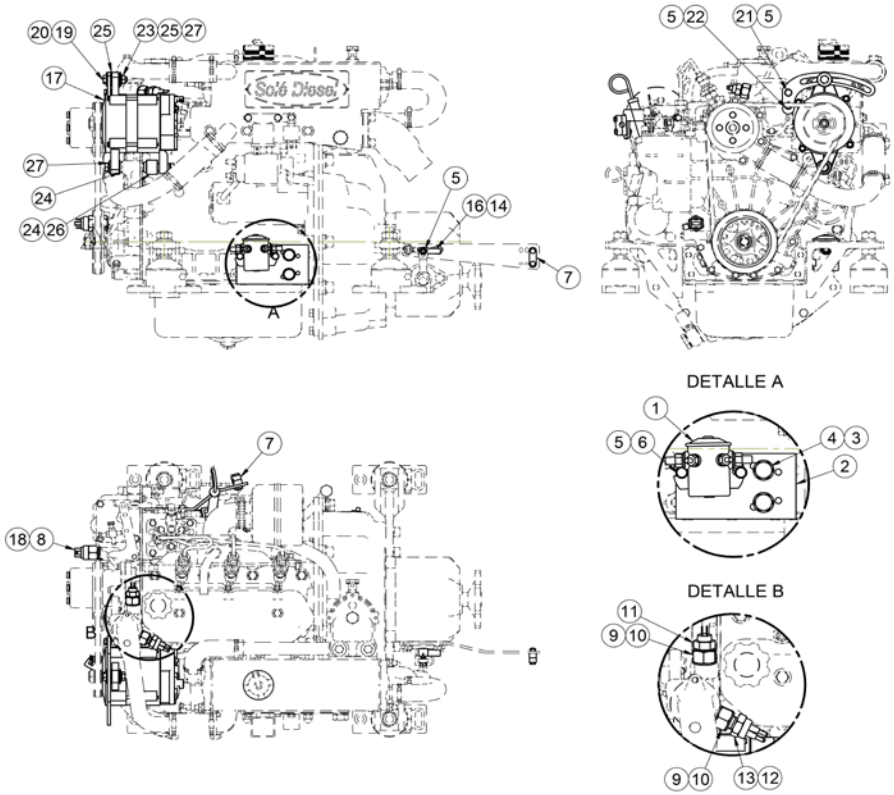

	24813510		Kit Water Leak Sensor & Alarm SP60 12V		
FIG.	REF.	QTY	DESCR.	FROM	UPTO
1	60938203	1	SPROP60 Water SYStem Alarm SYSTEM		
2	24813504	1	Water Alarm Sensor		

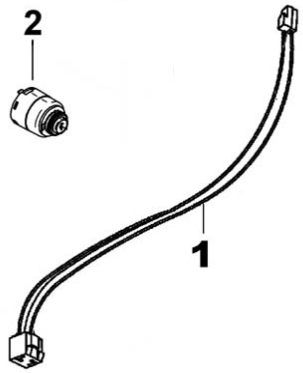

	13810009		Motor Bracket Width 185/187		
FIG.	REF.	QTY	DESCR.	FROM	UPTO
1	13810002E.1	1	RIGHT, front bracket		
2	13810001E.1	1	LEFT, front bracket		
3	13810037E	2	Support Rear		
NS	52101262	1	Bolt DIN 931 M8-45 8.8 [NS]	11/05/2016	

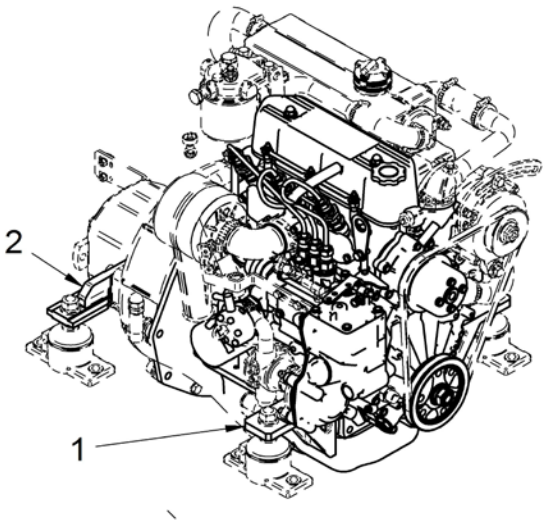

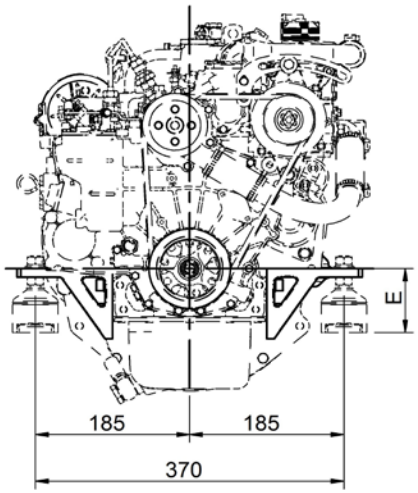

[NS] Not shown

Other Kits

	13810054		Motor Bracket Width 205		
FIG.	**REF.**	**QTY**	**DESCR.**	**FROM**	**UPTO**
1	13810052	1	Bracket, Front Left (Width 205)		
2	13810053	1	Bracket, Front Right (Width 205)		
3	13810010.4	2	Bracket, Rear (Width 205)		

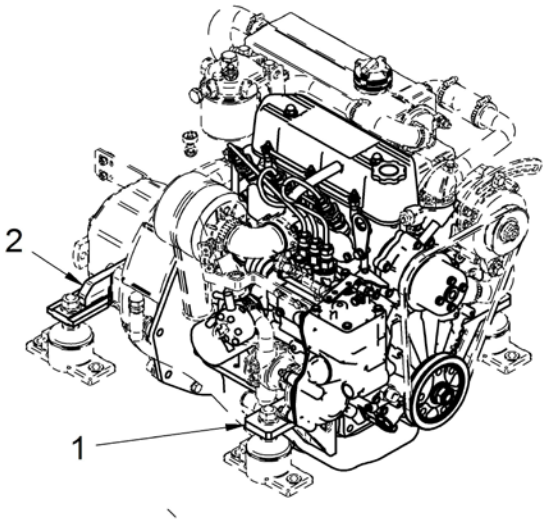

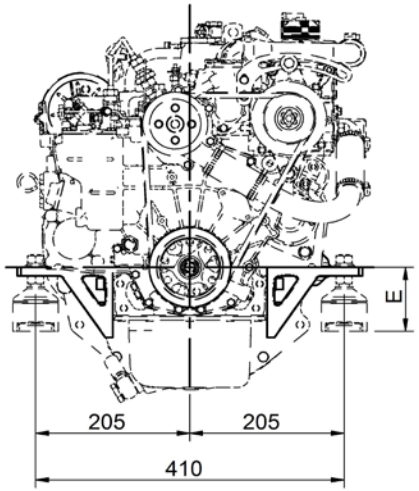

Other Kits

13810118S			Front Water Pomp MINI-17/29 Kit(Spline)		
FIG.	REF.	QTY	DESCR.	FROM	UPTO
1	13810118	1	Front Water Pump MINI-17/29 Kit Complete		

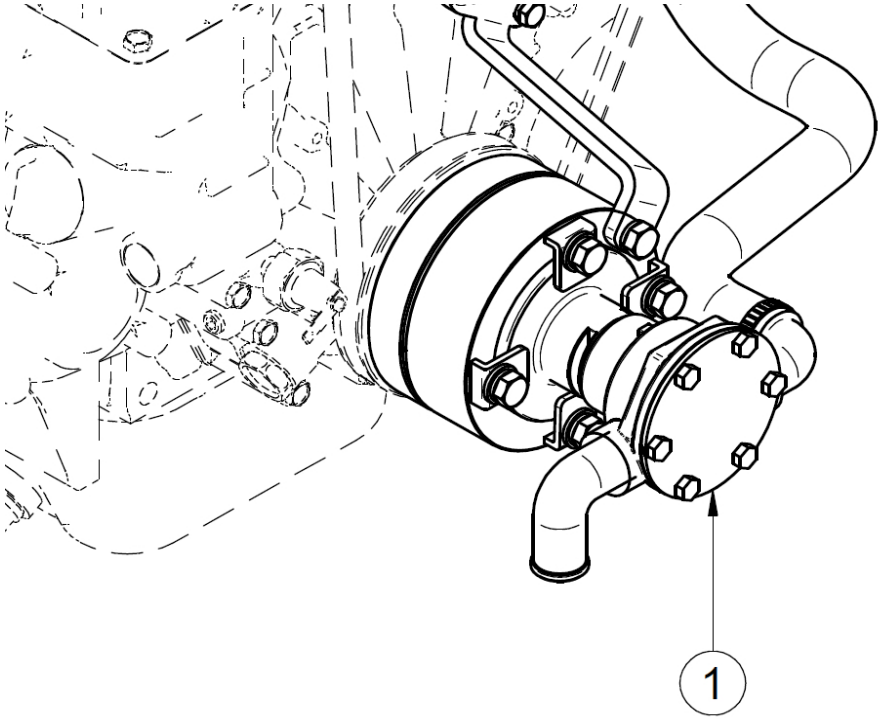

Other Kits

	13811157		Boiler Kit (S)		
FIG.	**REF.**	**QTY**	**DESCR.**	**FROM**	**UPTO**
1	13511050	1	NIPPLE,heater		
2	56000073	1	Copper Washer 16-23-1,5		
3	17124053	2	Joint		

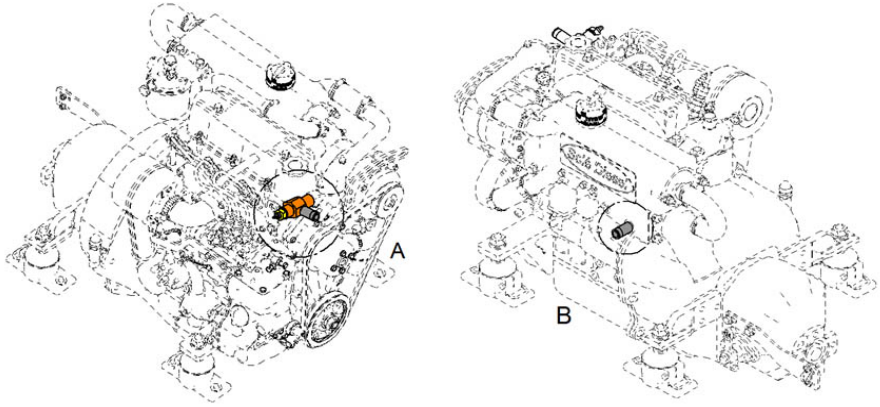

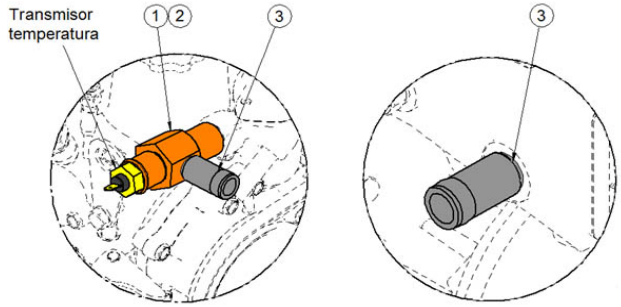

DETALLE A DETALLE B

Other Kits

	13812010		Pression Gauge Kit		
FIG.	**REF.**	**QTY**	**DESCR.**	**FROM**	**UPTO**
1	13812013.1	1	Pressure Tap		
2	13812011	1	Flexible Hose F-M G1/4-M16x2		
3	13812012	1	Presion Gauge 0-10 bar		
4	13812014	1	Protective Rubber		

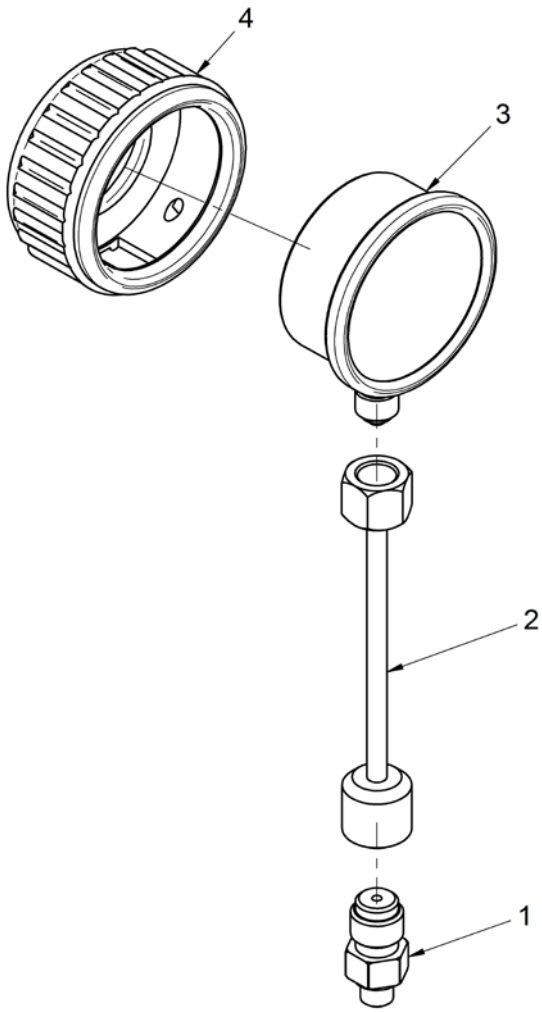

Exhaust System

	13813114		Exhaust Flange (S)		
FIG.	REF.	QTY	DESCR.	FROM	UPTO
1	13913015.1	1	Exhaust,Cover		
2	13813016.1	1	Gasket	04/08/2017	
2	13813027	1	Gasket		04/08/2017

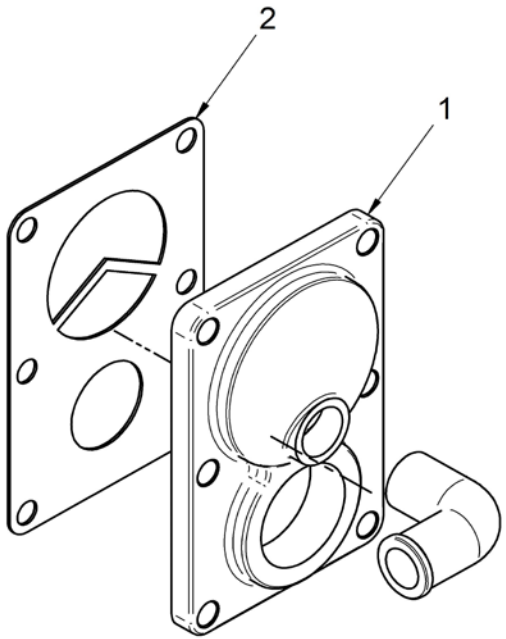

Exhaust System

13813115C			Kit Dry Exhaust With Flexible Pipe (S)		
FIG.	REF.	QTY	DESCR.	FROM	UPTO
1	13913015.1	1	Exhaust,Cover		
2	13813016.1	1	Gasket	04/08/2017	
2	13813027	1	Gasket		04/08/2017
3	13813115	1	Dry Exhaust With Flexible Pipe		

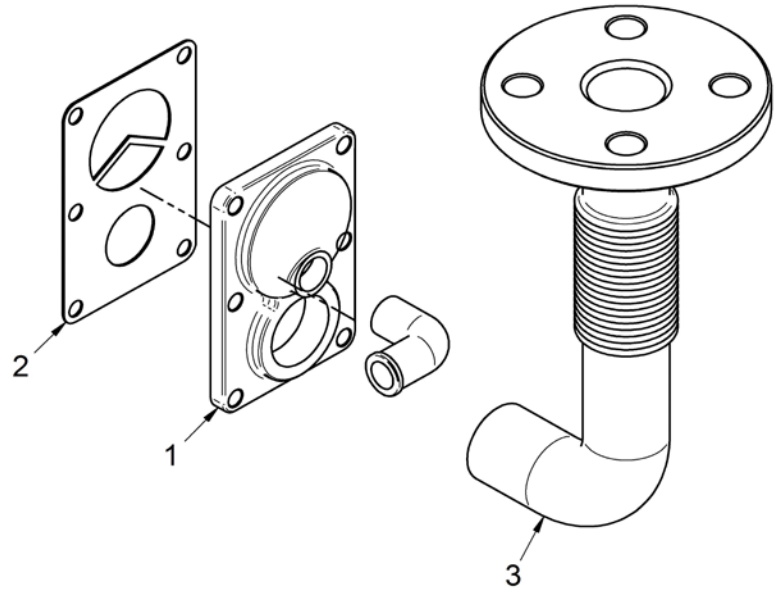

Exhaust System

13813118			Kit Dry Exh. Flexible Pipe & Silencer(S)		
FIG.	**REF.**	**QTY**	**DESCR.**	**FROM**	**UPTO**
1	13813016.1	1	Gasket	04/08/2017	
1	13813027	1	Gasket		04/08/2017
2	13913015.1	1	Exhaust,Cover		
4	13813115	1	Dry Exhaust With Flexible Pipe		
5	13413016	1	Gasket		
6	13813018	1	Exhaust Muffler		
7	13413019	1	RAINCover		
8	52101465	4	Bolt DIN 931 M16-60 8.8		
9	51030016	4	Washer DIN 125-16		
10	52120016	4	Nut DIN 934 M16 8.8		
11	53033016C	4	Washer		

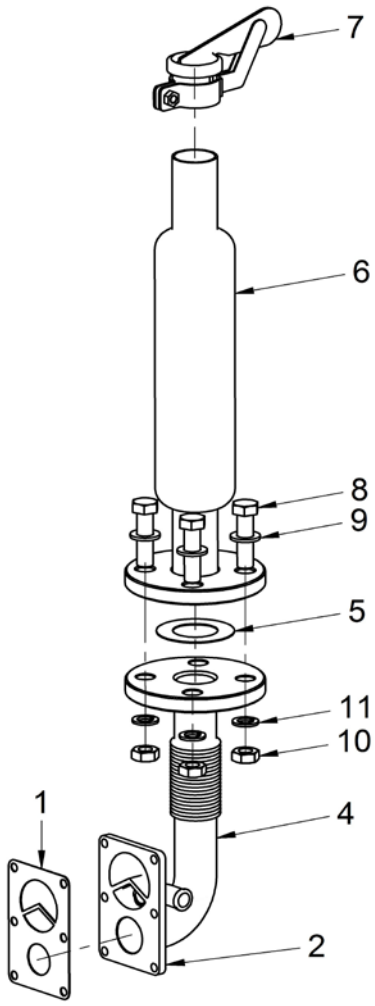

Power Take-off Pulley

	13110101		Pulley 2B (S)		
FIG.	**REF.**	**QTY**	**DESCR.**	**FROM**	**UPTO**
1	13110101.1	1	Pulley 2B		
2	53033010	3	Washer GROWER DIN 127-10		
3	52201315	3	Bolt DIN 931 M10-1,25-60 8.8		

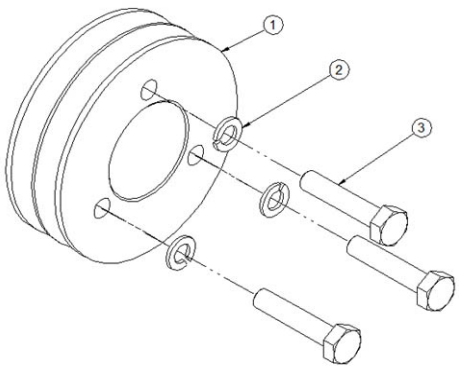

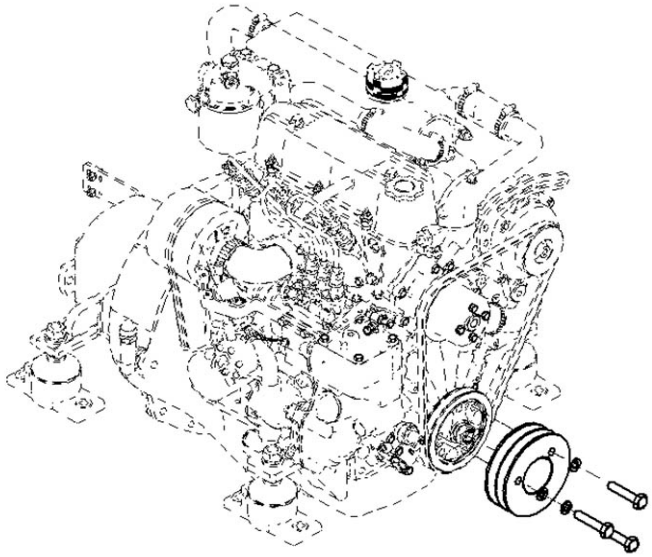

Power Take-off Pulley

	13110202		Pulley 2A (S)		
FIG.	**REF.**	**QTY**	**DESCR.**	**FROM**	**UPTO**
1	13110202.1	1	Pulley 2A	15/06/2016	
2	53033010	3	Washer GROWER DIN 127-10	15/06/2016	
3	52201313	3	Bolt DIN 931 M10-1,25-50 8.8	15/06/2016	

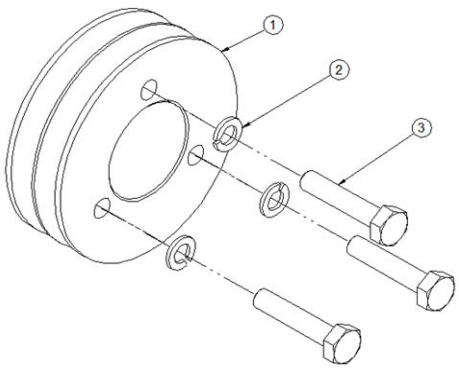

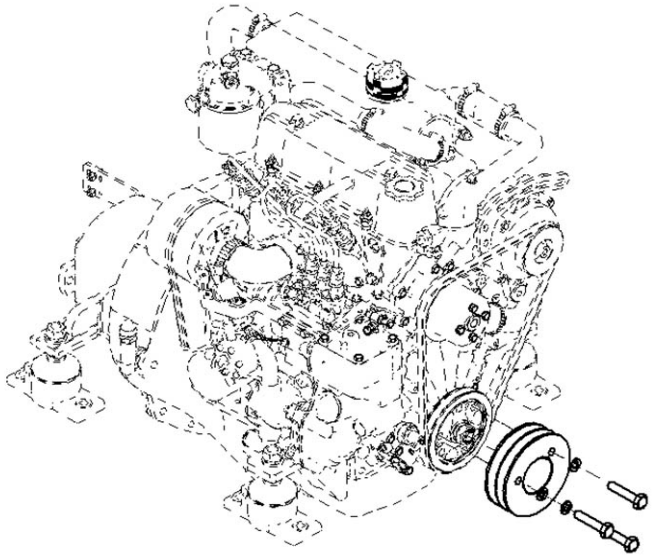

Kit Keel Cooling

13811200.1			Kit Refroid. Quille et Esc. Sec (S)		
FIG.	REF.	QTY	DESCR.	FROM	UPTO
1	13911002	1	Cover		
2	13811007	1	O-Ring D. 57X2,5		
3	13813016.1	1	Gasket	04/08/2017	
3	13813027	1	Gasket		04/08/2017
4	13913015.1	1	Exhaust,Cover		
5	52102259	6	Bolt DIN 933 M8-30 8.8		
6	13120046	1	Cover Oil Pump SH		
7	13120047	1	Gasket Water Pump		
8	13220042	1	Stud L 54		
9	13220043	3	Stud L 34		
10	17120049	4	Nut M8		

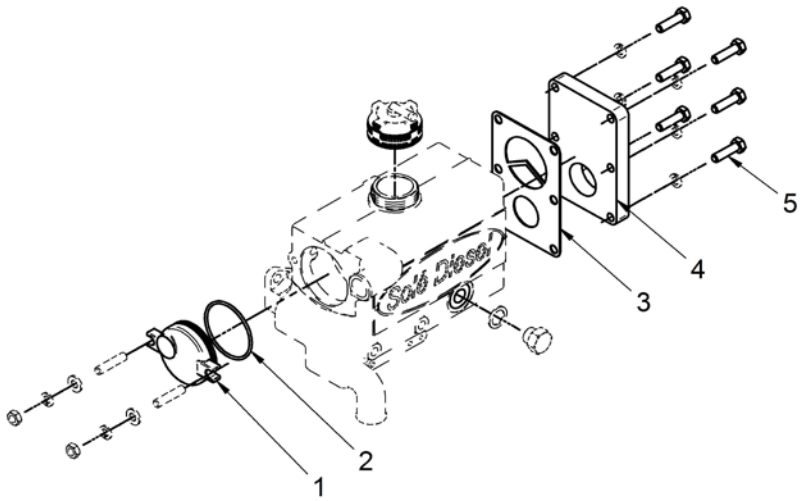

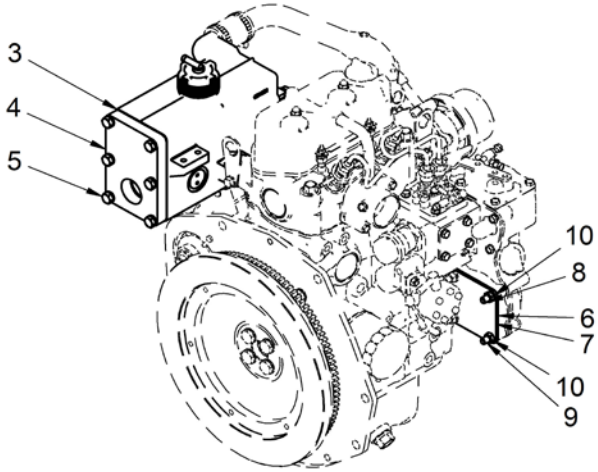

Instrument panel for engines TE1

	60930120.2		TE1 Panel 12V		
FIG.	REF.	QTY	DESCR.	FROM	UPTO
	60900301.3	1	V3 C.I. 12V Prop. Engine Board.Varnished	31/08/2017	
1	54108003	2	Bolt DIN 84 M3-8 INOX.		
2	60900118	1	Fuse 10 A.		
3	60900301.2	1	Integrated Circuit Plate 12V Protection	23/06/2015	30/08/2017
4	60930006	1	Gasket Panel		
5	60900037	1	Key-Locking		
6	60900038	1	Cover,KEY		
7	60930005	1	Panel N.1		
8	60900121	1	FuseHolder, panel		
NS	60900037.2	1	Connector [NS]		
NS	60900059	2	Cover [NS]		

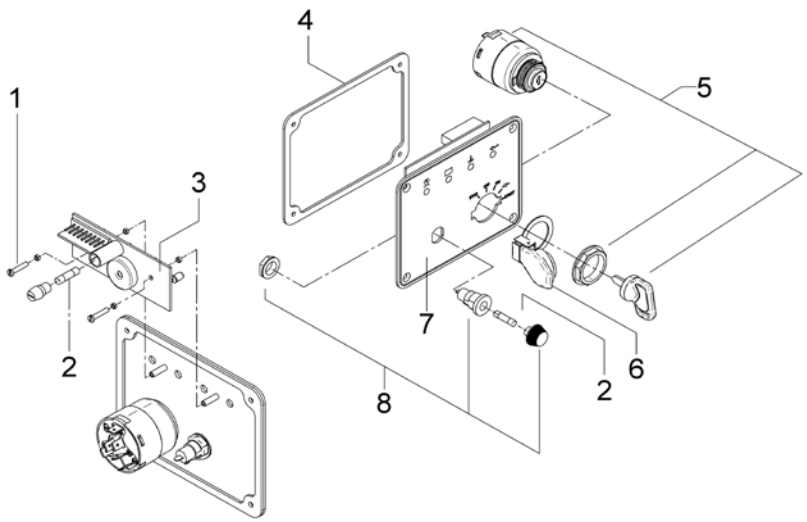

[NS] Not shown

Kits NMEA 2000 - one engine

	61438100		Kit SDC 2000 MINI-17/29 12V		
FIG.	**REF.**	**QTY**	**DESCR.**	**FROM**	**UPTO**
1	61400200	1	Kit SDC 2000 24V Standard		
2	60900091	2	MICRO Relay 12V 12-20		

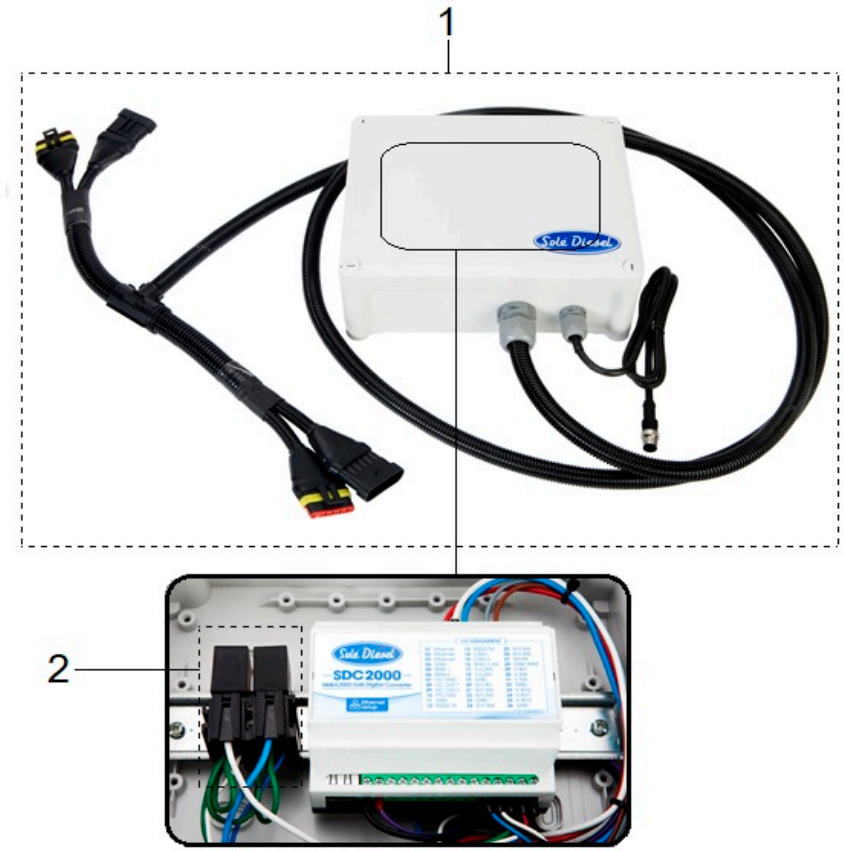

Kits NMEA 2000 - one engine
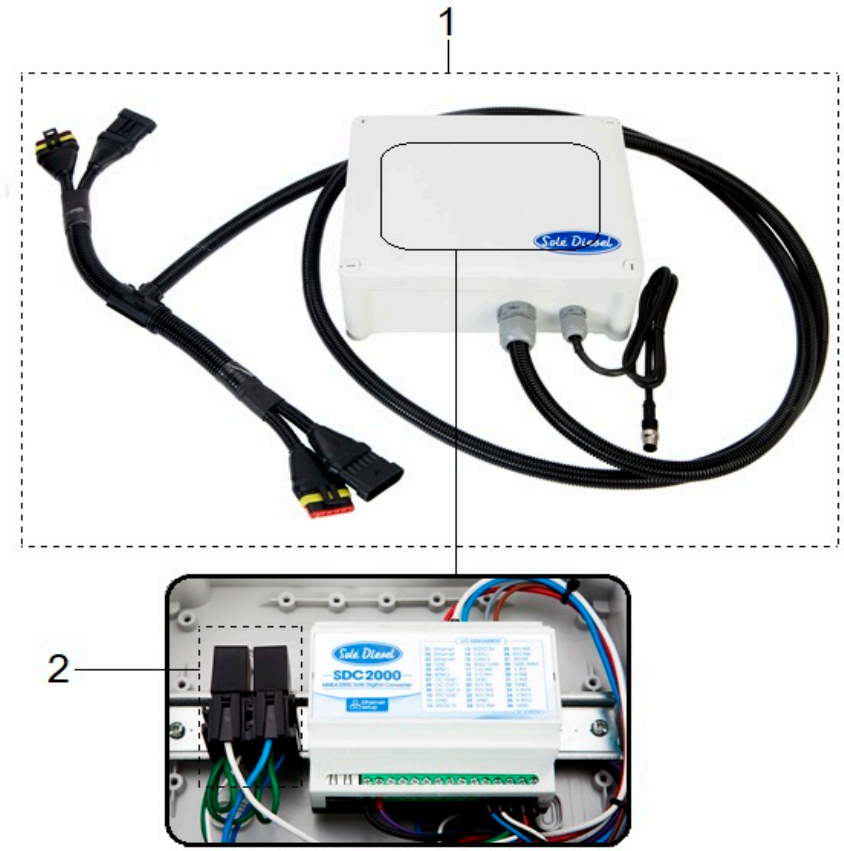
	61438200		Kit SDC 2000 MINI-17/29 24V		
FIG.	**REF.**	**QTY**	**DESCR.**	**FROM**	**UPTO**
1	61400200	1	Kit SDC 2000 24V Standard		
2	60900092	2	MICRO Relay 24V 24-10