Engine Mini-17 v6

VERSION 2018-2

SPARE PARTS MANUAL

PARTS LIST CATALOGUE

NORMS TO PLACE AN ORDER:

For fast and more efficient service, please specify the following information on spare parts orders that must be preferably done by FAX or e-mail as specified below:

1- Engine model: As shown in identification plate

2- Engine serial number: As shown in identification plate and stamped on crankcase

3- Item description + part number + quantity required

Spare parts requests must be adressed to:

recambios@solediesel.com

Telf.: +34 93 775 44 05

Fax: +34 93 775 30 13

The components shown in the catalog have:

- Figure: Number by which they are represented in scheme
- Description: Trade name of the component
- Quantity: Total number of parts used in the assembly of the part represented (may differ from the total minimum quantities)

Hoses, indicates the total length in meters

The diagrams shown in this catalog of spare parts, have only the purpose to identify the piece in question, its representation is not meaningful and may differ from the actual piece.

In case of doubt, contact Solé Diesel, or your authorized dealer.

The parts i / or references in this catalog are subject to change without notice.

SOLÉ, S.A.

C-243b, Km, 2 - P.O. BOX 15

08760 Martorell (Barcelona) Spain

Download the latest version of this manual HERE

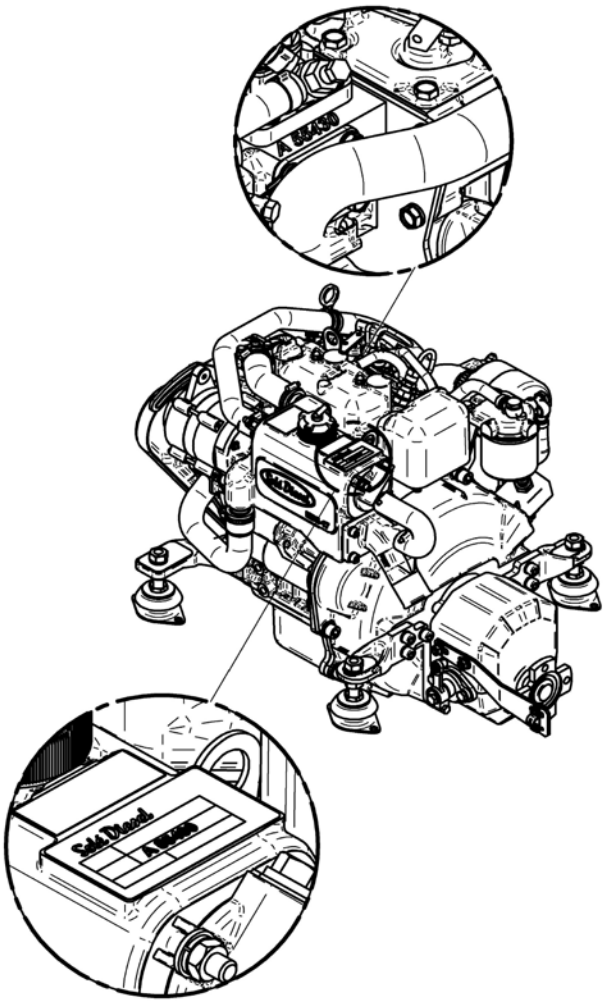

Contents

Engine Body
Cylinder Head
Rocker Cover & Breather
Valve Drive
Timing Parts
Gear Case
Cranckcase
Rear Plate
Piston & Connectiong Rod
Crankshaft & Flywheel
Oil System
Oil Pan
Engine Brackets
Belt Protection

Inlet & Exhaust
Inlet

Cooling System
Water Pump
Cooler Pipes
Water Cooler Assy MINI-17 v6
1/2" Pump Water, Set
Wet Exhaust

Fuel System
Fuel Pipe
Injection Nozzle
Fuel Injection Pump
Governor Parts
Fuel Supply Parts

Electrical System
Kit Alternator 14V/75A
Starter Assy
Electrical Wiring
SVT 20 MINI-17/29 Panel
SVT 30 MINI-17/29 Panel

Maintenance Kit
Kit Gasket
Pipe Rubber Set,water line 6 V.
Repair Kit Water Pump 1/2"

Gearbox TMC-40P
Sheet 1/2
Sheet 2/2
Maintenance Kit

SP60 S.Drive
Sheet 1/4 SP60 S.Drive V1
Sheet 2/4 SP60 S.Drive V1
Sheet 3/4 SP60 S.Drive V1
Sheet 4/4 SP60 S.Drive V1
Sheet 1/4 SP60 S.Drive V2
Sheet 2/4 SP60 S.Drive V2
Sheet 3/4 SP60 S.Drive V2
Sheet 4/4 SP60 S.Drive V2
Maintenance Kit

Gearbox TMC-60P
Sheet 1/2
Sheet 2/2
Kit de Service

Gearbox TMC-60A
Sheet 1/2
Sheet 2/2
Kit de Service

GearBox ZF-15 MIV
Sheet 1/2
Sheet 2/2

Elements Supports
Motor Bracket, Width 180
Motor Bracket, Width 185
Motor Bracket, Width 205

Motor Supports
Kit Replace MINI-17/29 v6 Supports to v5

Kit Gearbox
Kit GearBox RONIM-5
Kit S-Drive VOLVO 120SB/120SC/120SE
Kit S-Drive VOLVO 120S
Kit S-Drive VOLVO 100S
Kit S-Drive SD20 YANMAR
Kit S-Drive VOLVO 130S
Kit GearBox VOLVO MS-2 & MS-2B
Kit GearBox TMC-40P v6
Kit S-Drive VOLVO 110S
Kit S-Drive BUKH DV10 & DV20
Kit GearBox TMC-60
Kit Bobtail
Kit S-Drive SELVA
Kit GearBox TMC/ZF/PRM
Kit S-Drive TECHNO.SP60
Kit GearBox ZF 15 MIV

Electrical System
Kit 2nd Alternator 14V/90A
Kit Wire Earth Isolated Alternator 14V/7
Kit Water Leak Sensor & Alarm SP60 12V

Other Kits
Kit Conversion MINI-1/3 to MINI-17 v6
Front Water Pomp MINI-17/29 Kit(Spline)
Boiler Kit (S)
Pressure Gauge Kit 10 BAR
Kit Cooler Assy TMC-60

Exhaust System
Exhaust Flange (S)
Dry Exhaust SYStem, Elbow (S)
Kit Dry Exh. Flexible Pipe & Silencer(S)

Power Take-off Pulley
Pulley 2B (S)
Pulley 1B (S)
Pulley 2A (S)

Kit Keel Cooling
Kit Keel Cooling & Dry Exhaust (S)

Kit Instrument Panel SVT
Suplement Panel SVT 30 MINI-17/29
SVT 20 Panel 12V + Exh. Temp. Alarm Kit
SVT 30 Panel 12V + Exh. Temp. Alarm Kit
Kit 2nd Panel SVT 40 MINI-17/29 12V

SVT 10 Panel
SVT 10 Panel 12V

Kits NMEA 2000 - one engine
Kit SDC 2000 MINI-17/29 12V

Engine Body

D_MIA2_1_1			Cylinder Head		
FIG.	REF.	QTY	DESCR.	FROM	UPTO
1	13821011.4	2	HANGER Engine		
2	13821001.4	1	Head Assy CYLINDER		
2A	13520013	1	Cap,SealING		
2B	13821012	2	Cap		
2C	17621002.4	4	Guide Valve		
2D	13921061G	2	Seat Valve (Intake)		
2F	(*)	5	Not available [NP]		
3	13821004	1	Gasket Cylinder Head		
4	13821005	6	Bolt,cylinder head		
5	17621013.4	2	Bolt,cylinder head [NP]		
6A	52102256	2	Bolt DIN 933 M8-15 8.8		
6B	53033008	2	Washer GROWER DIN 127-8		
7	17621011.4	1	Plug TAPER		

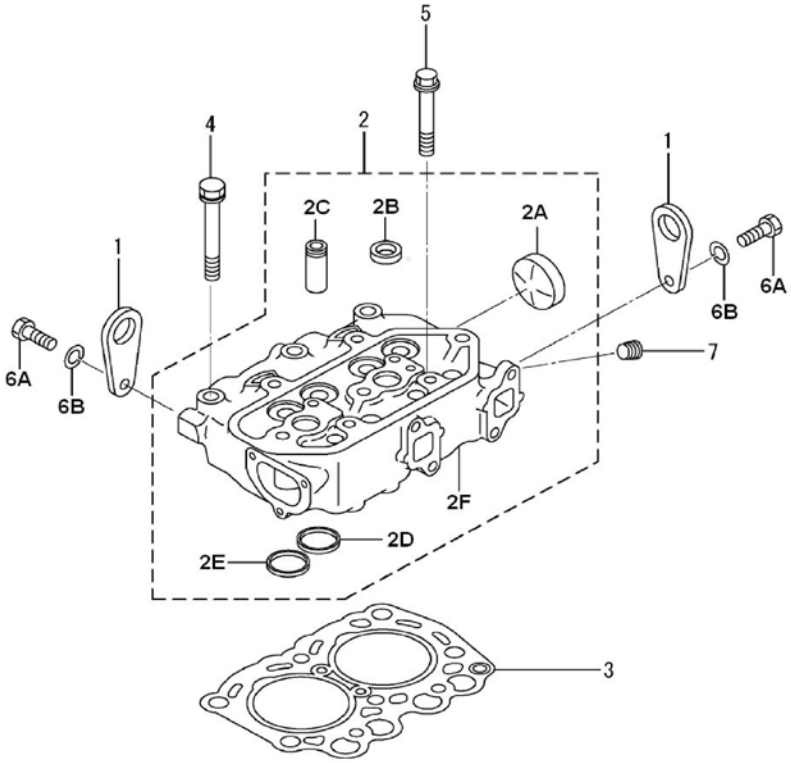

[NP] Not provided

Engine Body

D_MIA2_1_2			Rocker Cover & Breather		
FIG.	REF.	QTY	DESCR.	FROM	UPTO
1	13821017.4	1	Cover,Rocker [NP]		
1B	13821010	1	Gasket Rocker Cover		
1C	13821008.4	1	Cover,Rocker		
2	13821018	2	Nut		
3	17427004G	2	Washer DIN 125-6 [NP]		
4	17621006.4	1	Hose BREATHER		
5	17621003.4	1	Cap Oil FILLER		
5A	13721007	1	O-Ring D. 30X3		

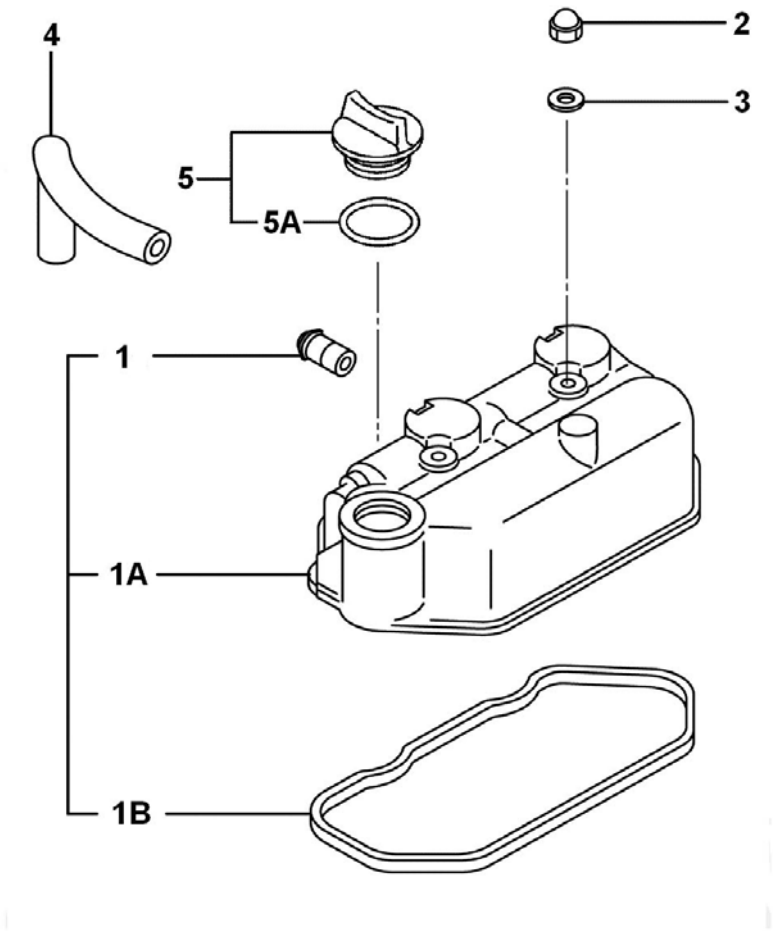

[NP] Not provided

Engine Body

D_MIA1_1_3			Valve Drive		
FIG.	REF.	QTY	DESCR.	FROM	UPTO
1	13822069	4	Cap Stem		
2	(*)	1	Not available [NP]		
2A	13822046.4	1	Shaft Assy,Rocker		
2B	13822048.4	2	STAY Rocker		
2C	13822042	4	ARM Rocker		
2E	17622070.4	1	Pin GROOVED		
2F	17622047.4	1	Spring Rocker SHAFT		
2G	52120006	4	Nut DIN 934 M6 8.8		
2H	53040012	2	CIRClip DIN 471 E-12		
2I	13822044	4	Screw Adjusting		
3	13822055.1	2	Intake Valve [NP]		
4	13822056.1	2	Exhaust Valve [NP]		
5	13822058	4	Retainer Valve SP		
6	17622059.4	8	LOCK Valve		
7	13222054	4	Seal Valve Stem		
8	13822053	2	Bolt Rocker STAY		
9	17622061.4	4	Tappet [NP]		
10	17622041.4	4	ROD PUSH		
11	52101265	2	Bolt DIN 931 M8-60 8.8		
12	53033008	2	Washer GROWER DIN 127-8		
14	13822057.1	4	Spring,Valve	23/08/2017	
14	13822057.4	4	Spring,Valve [NP]		23/08/2017

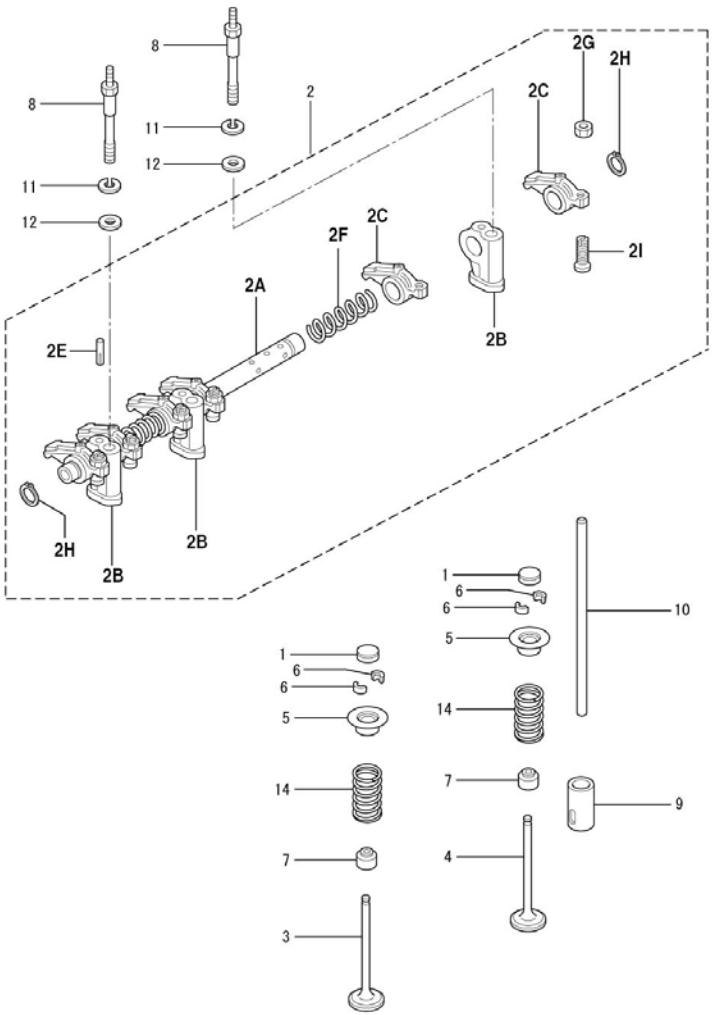

[NP] Not provided

Engine Body

D_MIA2_1_4			Timing Parts		
FIG.	REF.	QTY	DESCR.	FROM	UPTO
1	13822033	2	Washer CamShaft Stop		
2	17622067.4	3	Bearing Ball		
3	13822035.4	1	CamShaft		
4	17622036.4	1	KEY		
5	53040016	1	CIRClip DIN 471 E-16		
6	17622068.4	1	Bearing Ball		
7	13822040	1	Shaft Fuel Injection Pump		
8	13822060.4	1	Key, Sunk		
9	13822066	1	Ball Bearing 6005-C3		
10	13822043.4	1	Gear,Fuel INJ.Pump Z=52		
11	13922065G	1	Gear Oil Pump		
12	53040020	1	CIRClip DIN 471 E-20		
13	17622034.4	1	Plate DISTANCE		
14	17622038.4	1	Gear Assy,IDLER Z=40		
15	17622043.4	1	Gear,Fuel INJ.Pump Z=52		
16A	52102155	1	Bolt DIN 933 M6-12 8.8		
16B	53033006	1	Washer GROWER DIN 127-6		

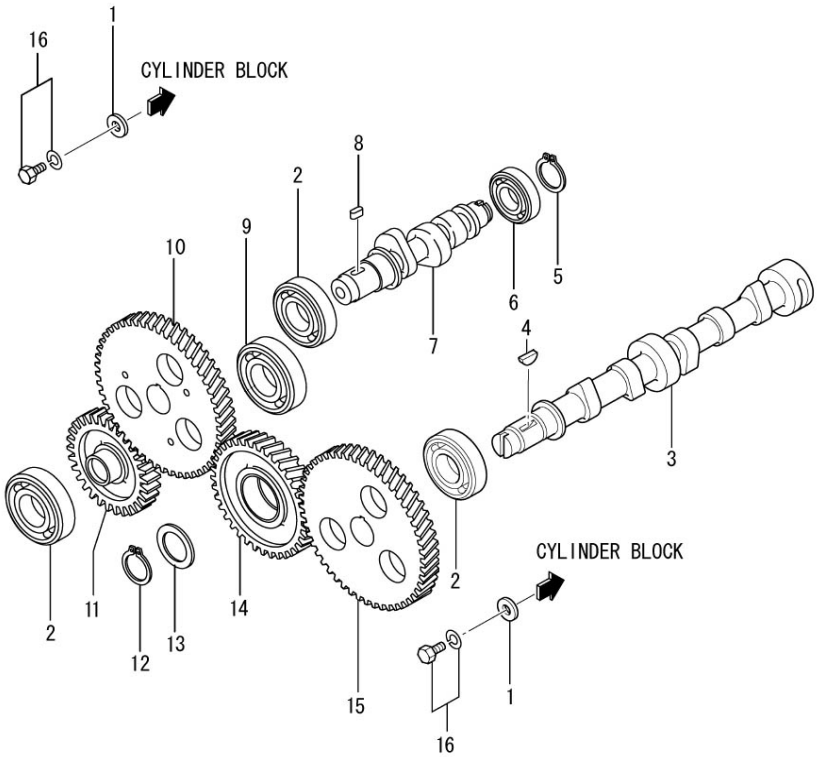

Engine Body

D_MIA3_1_5			Gear Case		
FIG.	REF.	QTY	DESCR.	FROM	UPTO
1	13820045	1	Cap SealING (20)		
2	13820035.4	1	Case Gear		
2A	17621011.4	1	Plug TAPER		
2B	17620035.4	1	Case Gear		
2C	13224045	1	Plug		
2D	17620052.4	1	Housing Oil Pump		
2E	17221043	3	Bolt,W/Washer		
2F	13820013.4	1	Plug		
2G	13120032	1	Washer 18-23-1,5 [NP]		
2H	13224043	1	Plunger		
2I	13824044	1	Spring RELIEF		
2J	13820050	1	Gear Oil Pump INN		
2K	13820051	1	Gear Oil Pump OUT		
3	17620040.4	1	Gasket Gear Case [NP]		
4	13820039	1	Oil Seal		
5	13820042	3	Bolt DIN 933 M6-35 8.8 [NP]		
6	13720038	4	Bolt [NP]		
7	52102166	1	Bolt DIN 933 M6-65 8.8 CINCADO		
8	13322074	4	Bolt DIN 933 M6-16 8.8 [NP]		
9	13820044	2	O-Ring D. 11X2,5		
10	13820037	1	Housing Pump Gear		
11	13820038	1	Gasket Housing		
12	17122051	1	Bolt, w/washer		
13	13220043	1	Stud L 34		
14	17220047	1	Gasket Water Pump [NP]		
15	13220042	1	Stud L 54		

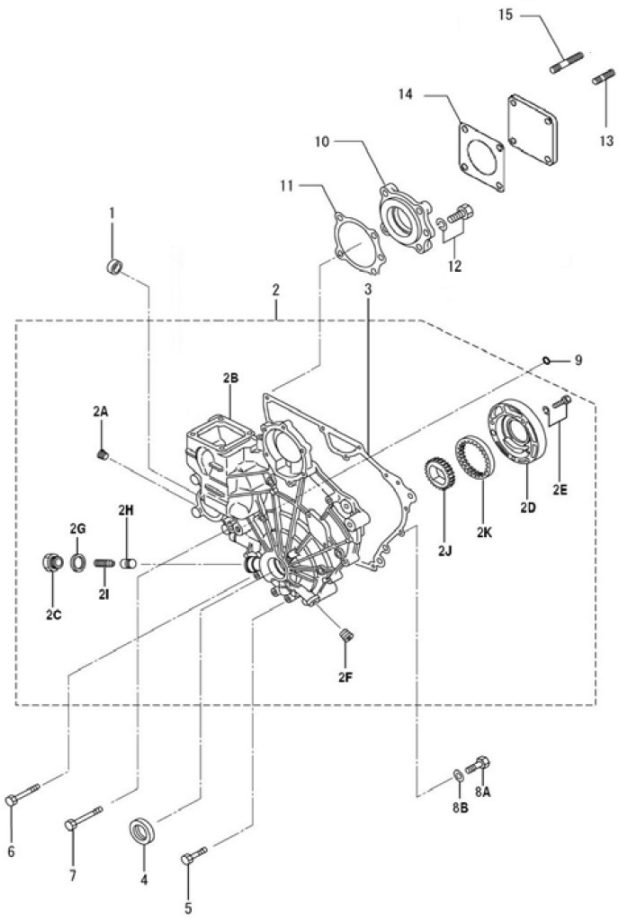

[NP] Not provided

Engine Body

D_MIA3_1_6			Cranckcase		
FIG.	REF.	QTY	DESCR.	FROM	UPTO
1	13820011	1	Cover		
2	17620012.4	1	Gasket Cover		
3A	13520013	2	Cap,SealING		
3B	13820009.1	6	Bolt Bearing Cap		
3C	13220012	1	Cap Sealing		
4	17620013.4	3	Plug Taper 1/16		
5	17620036.4	2	Pin Dowel		
6	17620014.4	1	Shaft IDLER		
7	17620007.4	1	Guide		
8	17620020.4	1	Pin		
9	13820013	1	Plug Expansion		
0	(*)	3	Not available [NP]		
10	17620009.4	2	Bushing		
11	17620021.4	1	Bushing		
12	17620022.4	2	BUSHING,KNOCK		
13	17620010.4	3	Bushing		
14	17620023.4	1	Plug TAPER		
15	13820002	4	Seal Side		
16	13820017	1	Plate, Front		
17	13822060.4	1	Key, Sunk		
18	17620018.4	1	Gasket Front Plate [NP]		
19	17620016.4	1	Gasket Oil Seal C		
20	13820008	1	Seal Oil		
21	17624047.4	1	Shaft Oil Filter		
22	17620024.4	1	Plug TAPER		
23	52102157	6	Bolt DIN 933 M6-20 8.8		
24A	52102156	7	Bolt DIN 933 M6-16 8.8		
24B	53033006	7	Washer GROWER DIN 127-6		
25	52102257	2	Bolt DIN 933 M8-20 8.8		
26	13820003	1	Bearing Set CRANK STD		
27	13820004	1	Bearing Set CRANK		
28	13820005	1	Bearing Set CRANK		
29	17621003.4	1	Cap Oil FILLER		
30	13820129C	1	Gauge Oil LEVEL		

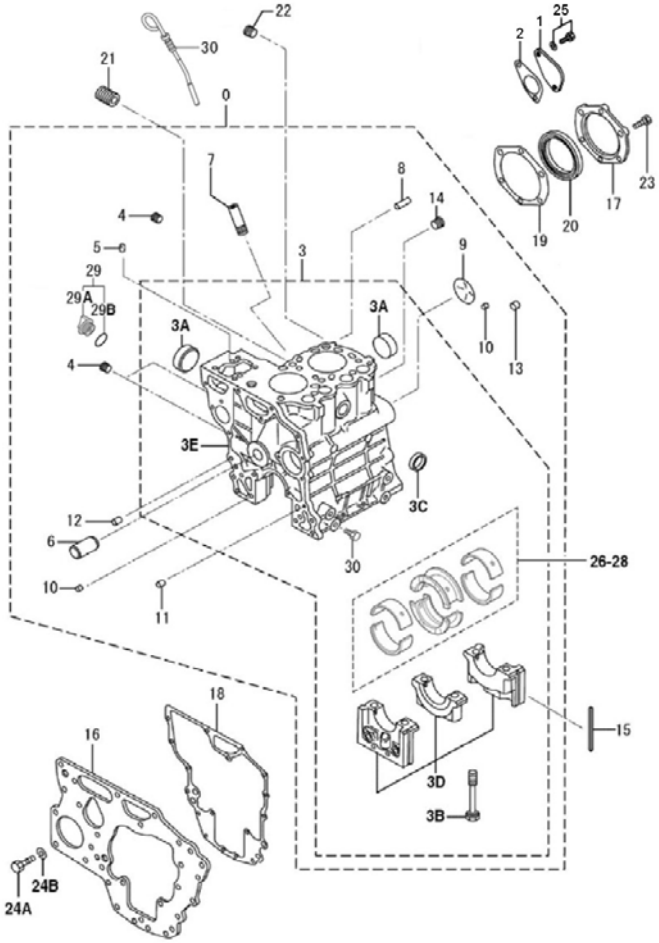

[NP] Not provided

D_MIB1_1_7			Rear Plate		
FIG.	REF.	QTY	DESCR.	FROM	UPTO
1	17120062	6	Bolt,w/washer		
2	13820024	1	Plate REAR		
3	13520060	1	Pin KNOCK (8X10)		

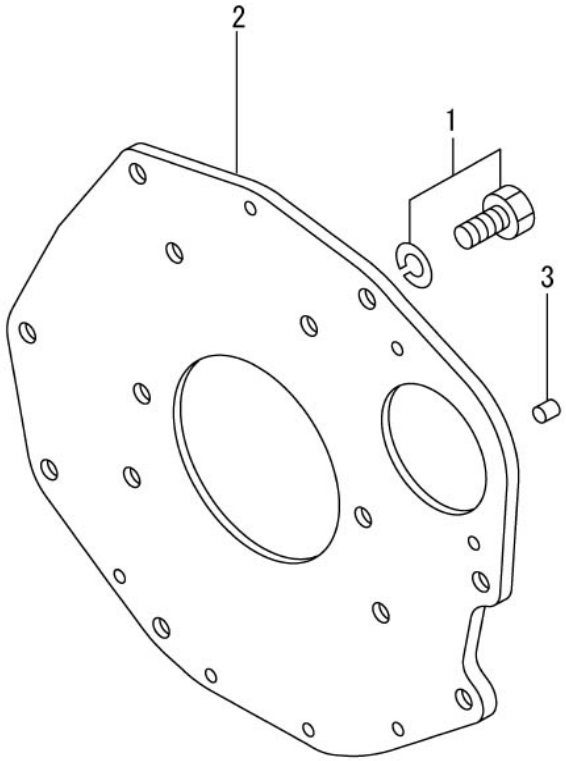

D_MIA1_1_8			Piston & Connectiong Rod		
FIG.	REF.	QTY	DESCR.	FROM	UPTO
1	13822001.1	2	Piston & Pin Set STD.		
2	13822002.1	2	PISTON & Pin SET O.S. 0.25		
3	13822003.1	2	Piston & Pin Set O.S. 0.50		
4	13822006	2	Ring Set,Piston STD.		
5	13822007	2	Ring Set,Piston O.S. 0.25		
6	13822008	2	Ring Set,Piston O.S. 0.50		
7	17622012.4	2	ROD Assy		
7A	13222011	4	Nut,connecting rod		
7B	13222013	4	Bolt,connecting rod		
8	13822014	2	Bearing Set,CON-ROD STD.		
9	13822015	2	Bearing Set,Con-Rod U.S. 0.25		
10	13822016	2	Bearing Set,Con-Rod U.S. 0.50		

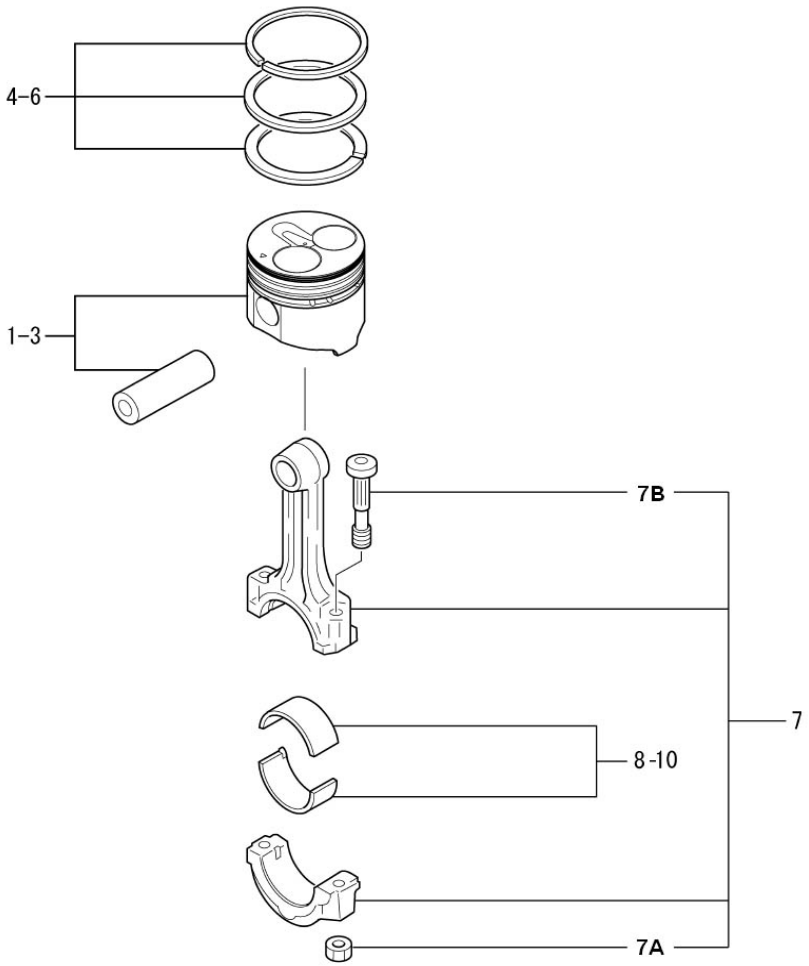

D_MIA2_1_9			Crankshaft & Flywheel		
FIG.	REF.	QTY	DESCR.	FROM	UPTO
1	13822018	1	CrankShaft		
2	13822024.4	1	Pulley CrankShaft [NP]		
3	17622021.4	1	Gear CrankShaft Z=26		
4	13822026	1	Nut		
5	51030016	1	Washer DIN 125-16		
6	53033016C	1	Washer		
7	17622036.4	2	KEY		
8	13822027.4	1	Flywheel Assy		
8A	17622029.4	1	Gear Ring Z=106 [NP]		
9	13822031.4	4	Bolt Flywheel		

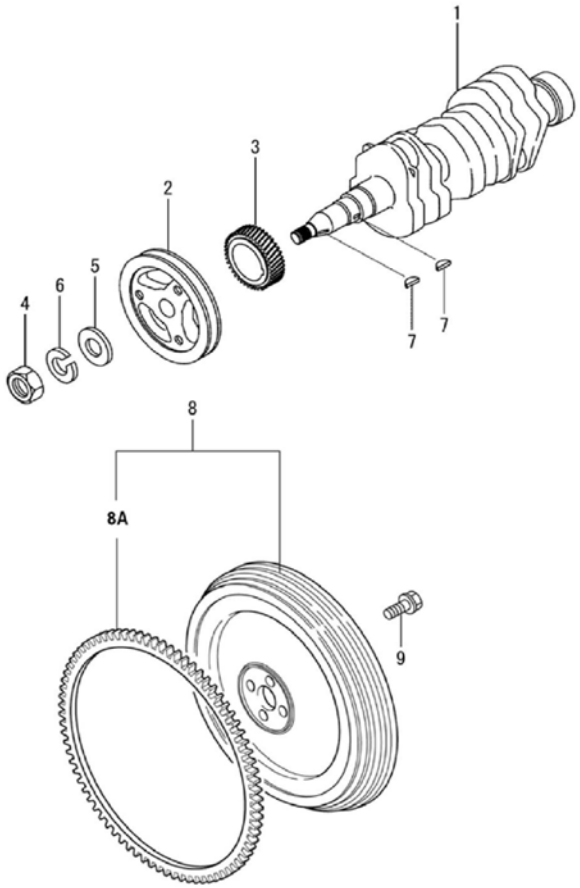

[NP] Not provided

Engine Body

D_MIB1_1_10			Oil System		
FIG.	REF.	QTY	DESCR.	FROM	UPTO
1	13124051	1	Filter Oil Element		
2	17624060.4	1	SWITCH Assy		
3	51221014	1	Nut DIN 936 M14X1,5 5.6 ZINC		
4	13824052	1	SCREEN Assy Oil		

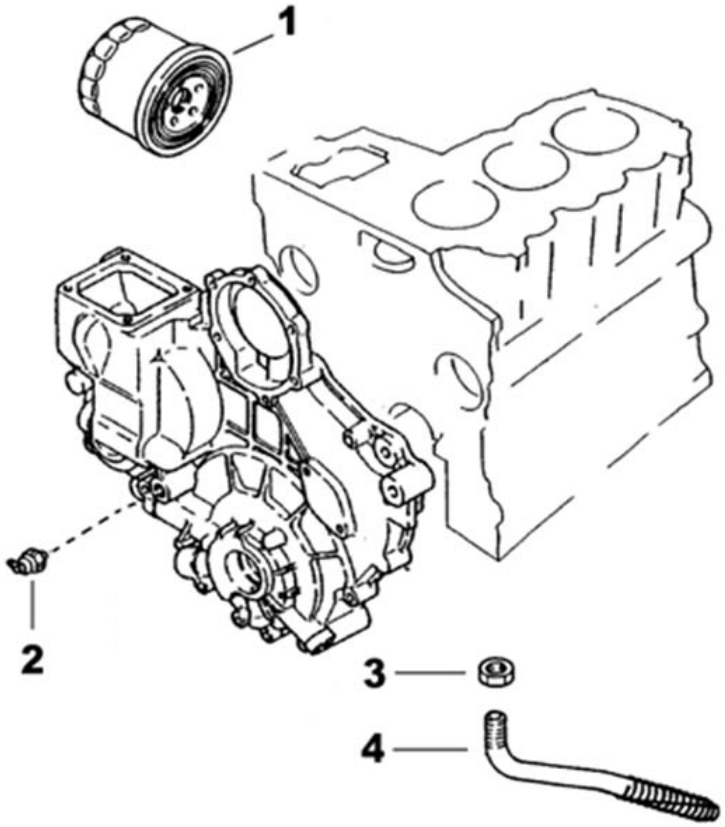

Engine Body

D_MIA3_1_11			Oil Pan		
FIG.	REF.	QTY	DESCR.	FROM	UPTO
1	13812030	1	Tube Oil Gauge		
2	13812029	1	Oil Dipstick		
3	16514022	1	Coupling,screw		
4	56000077	2	Washer 18-23-1,5		
5	13820030.4	1	PAN Assy Oil		
6A	52102155	14	Bolt DIN 933 M6-12 8.8		
6B	53033006	14	Washer GROWER DIN 127-6		
7	13820033.4	1	Gasket Oil PAN		
8	52102157	2	Bolt DIN 933 M6-20 8.8		
9	51030006	2	Washer DIN 125-6		

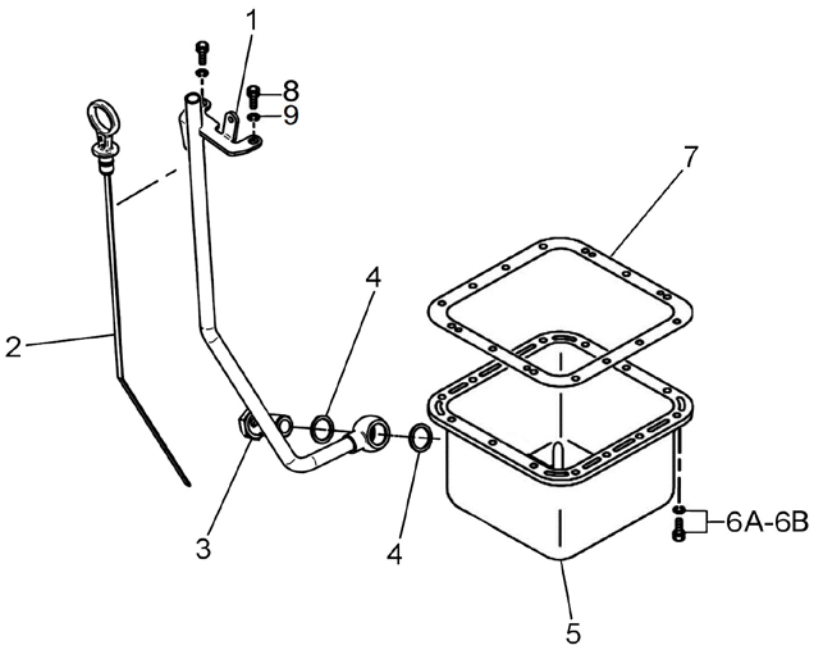

Engine Body

D_MIA3_1_12			Engine Brackets		
FIG.	REF.	QTY	DESCR.	FROM	UPTO
1	13810065	1	Left Front Bracket		
2	61638000	4	Anti Vibration Mount Type F		
3	52203313	4	Bolt DIN 912 M10-1,25-50 12.9		
4	53033010	4	Washer GROWER DIN 127-10		
6	13810066	1	Right Front Bracket		

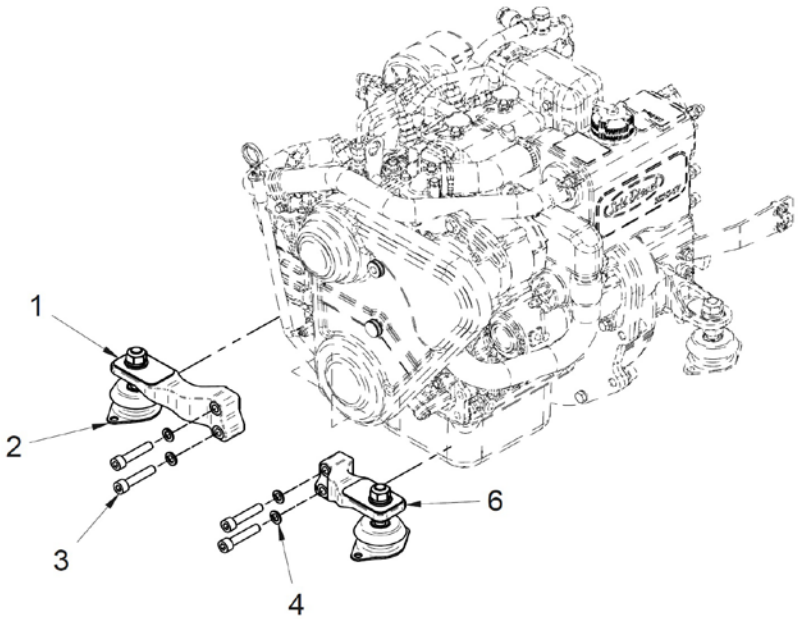

Engine Body

D_MIA3_1_15			Belt Protection		
FIG.	REF.	QTY	DESCR.	FROM	UPTO
1	13810064	1	Belt Protection		
2	13810075	1	Spacer		
3	52111161	1	ROD DIN 913 M6-40 8.8		
4	52111158	1	ROD DIN 913 M6-25 8.8		
5	13810076	1	Spacer		
6	52111167	1	Rod DIN 913 M6-70 8.8		
7	13810077	1	Spacer		
8	13810070	3	Knob		
9	17617006	3	Spacer 6,5X12X5		
10	13810078	1	Spacer 6.2x10x5		

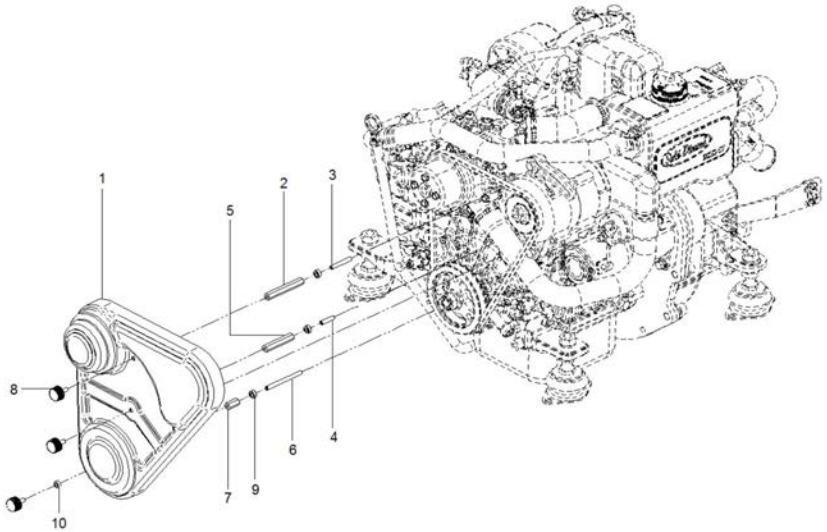

Inlet & Exhaust

D_MIA3_2_1			Inlet		
FIG.	REF.	QTY	DESCR.	FROM	UPTO
1	5491A007	3	Bolt PT 3x20 WN1412		
2	5491A004	2	Bolt PT 3x10 WN1413		
3	13810074	1	Filter Air Complete	15/02/2017	
3A	13810072	1	Air Filter, Part 1 [NP]		
3B	13810073	1	Air Filter Element		
3C	13810071	1	Air Filter, Part 2 [NP]		
4	54082032	1	Clamp DIN 3017 32-50/12 W4		
5	54102109	2	Bolt DIN 933 M5-25 INOX.		
6	13819001	1	Clamp		
7	13810057	1	Pipe Sub Assy,Intake		
8	52120006	1	Nut DIN 934 M6 8.8		
9	53033006	1	Washer GROWER DIN 127-6		
10	14419023	1	Ball JOINT		
11	15119015	1	CABLE Holder Ball		
12	13821042	1	O-Ring D. 40X3,5		
13	13821033.1	1	Bolt,W/Washer		24/07/2017
13A	52102155	1	Bolt DIN 933 M6-12 8.8	25/07/2017	
13B	53038006	1	Washer DIN 6798-A 6	25/07/2017	
14	13821030	1	Cover Assy Intake		
15	17621017	1	Pipe		
16	52102162	2	Bolt DIN 933 M6-45 8.8		
17	52102157	1	Bolt DIN 933 M6-20 8.8		
18	13821032.4	1	Gasket Intake COV		

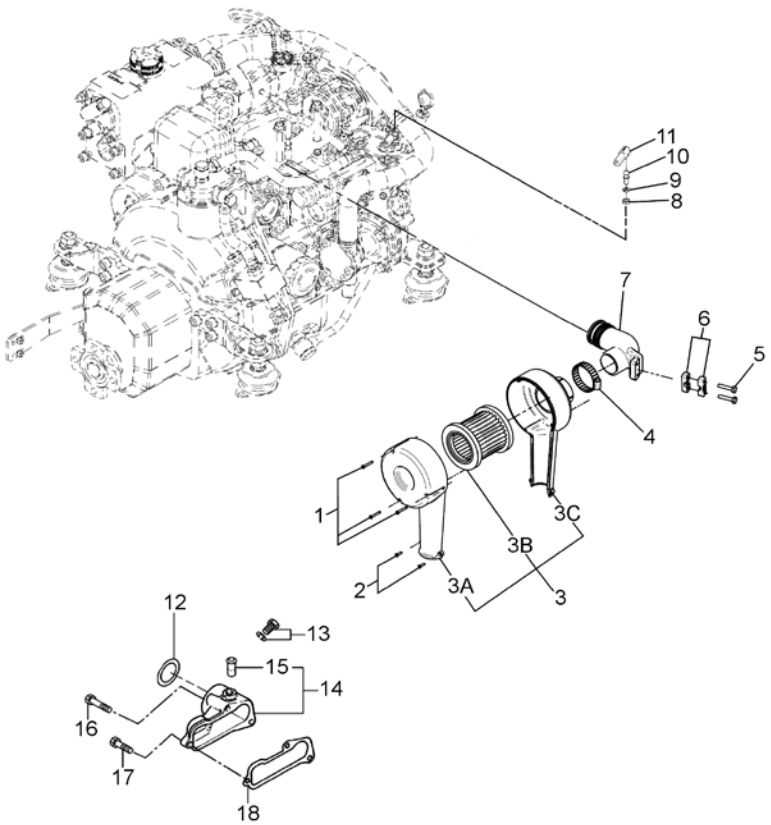

[NP] Not provided

Cooling System

D_MIA3_3_1			Water Pump		
FIG.	REF.	QTY	DESCR.	FROM	UPTO
2	13921021	1	Pulley Water Pump		
3A	52102155	4	Bolt DIN 933 M6-12 8.8		
4	13821020	1	Fresh Water Pump		
5	17621022.4	1	Gasket Water Pump		
6	52102157	2	Bolt DIN 933 M6-20 8.8		
7	52102160	1	Bolt DIN 933 M6-35 8.8		
8	52101162	1	Bolt DIN 931 M6-45 8.8		
9	52102164	2	Bolt DIN 933 M6-55 8.8		
11	13821027	1	Thermostat 71º		
13	13821031	1	Gasket Water OutL		
14	17621037.4	1	FITTING Thermostat New [NP]		
15	17621033.4	1	Gasket Thermostat		
16	52102158	2	Bolt DIN 933 M6-25 8.8		
17	52101165	1	Bolt DIN 931 M6-60 8.8		
18	17621026.4	1	Pipe BYPASS		
19	13821038	2	O-Ring D. 9X2		
20	56000073	2	Copper Washer 16-23-1,5		
21	60900070	1	Thermo-Switch 97ºC		
22	60900980	1	Temperature Sensor		

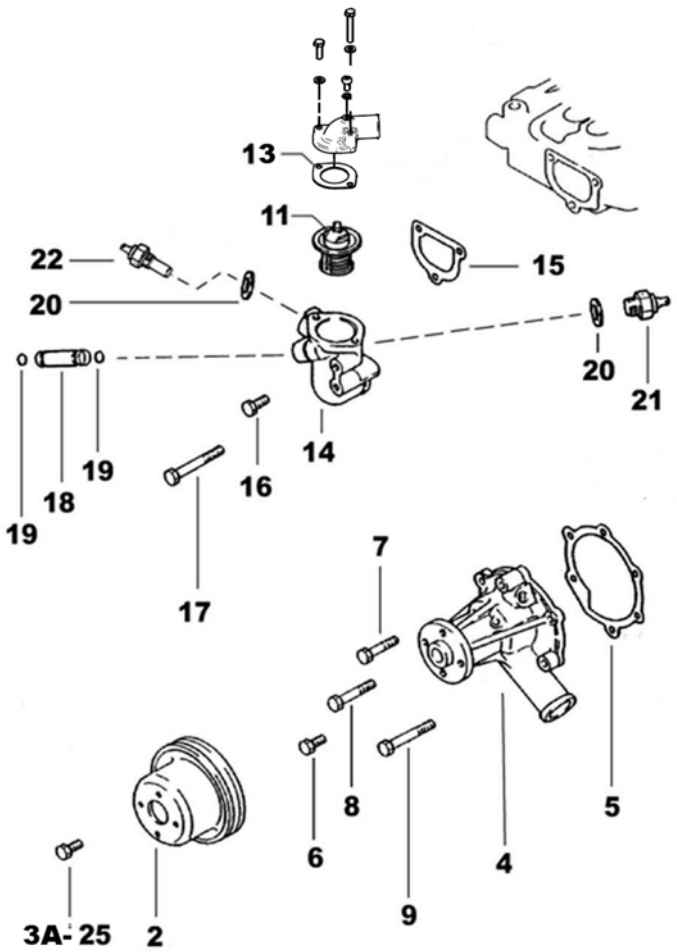

[NP] Not provided

Cooling System

D_MIA3_3_2			Cooler Pipes		
FIG.	REF.	QTY	DESCR.	FROM	UPTO
1	13811030	1	Sleeve Rubber		
2	54081023	3	Clamp DIN 3017 23-35/9 W4		
3	54081016	2	Clamp DIN 3017 16-27/9 W4		
4	52102158	1	Bolt DIN 933 M6-25 8.8		
5	52120008	4	Nut DIN 934 M8 8.8		
6	53033008	4	Washer GROWER DIN 127-8		
7	51030008	4	Washer DIN 125-8		
8	13811062	4	Pump Bracket		
9	17011007	1	O-Ring D. 57X3		
10	37611000	1	1/2" Pump Water, Set		
11	13811033	2	Raccord 1/2"		
12	52102155	1	Bolt DIN 933 M6-12 8.8		
13	53033006	1	Washer GROWER DIN 127-6		
14	51030006	3	Washer DIN 125-6		
15	13811028	1	Sleeve Rubber		
16	13821031	1	Gasket Water OutL		
17	59071304	3	Clamp RSGU 1 30/15 W1		
18	52102157	1	Bolt DIN 933 M6-20 8.8		
19	52102161	1	Bolt DIN 933 M6-40 8.8		
20	53038006	1	Washer DIN 6798-A 6		
21	13811035	1	Bolt,bleed		
22	56000053	1	Washer 6-10-1,5		
23	13811031	1	Cover		
24	54081025	1	Clamp DIN 3017 25-40/9 W4		
25	13811029	4	Sleeve Rubber		
26	13811036	1	Water Cooler Assy MINI-17 v6 [NP]		
27	13811032	1	Elbow		
28	14711008	2	Stud,cover		
29	51125008	2	Nut Exhaust		
30	13821035	1	Gasket Exhaust Manifold		
31	52102257	2	Bolt DIN 933 M8-20 8.8		
32	53038008	2	Washer DIN 6798-A 8		
33	54081020	2	Clamp DIN 3017 20-32/9 W4	03/11/2017	

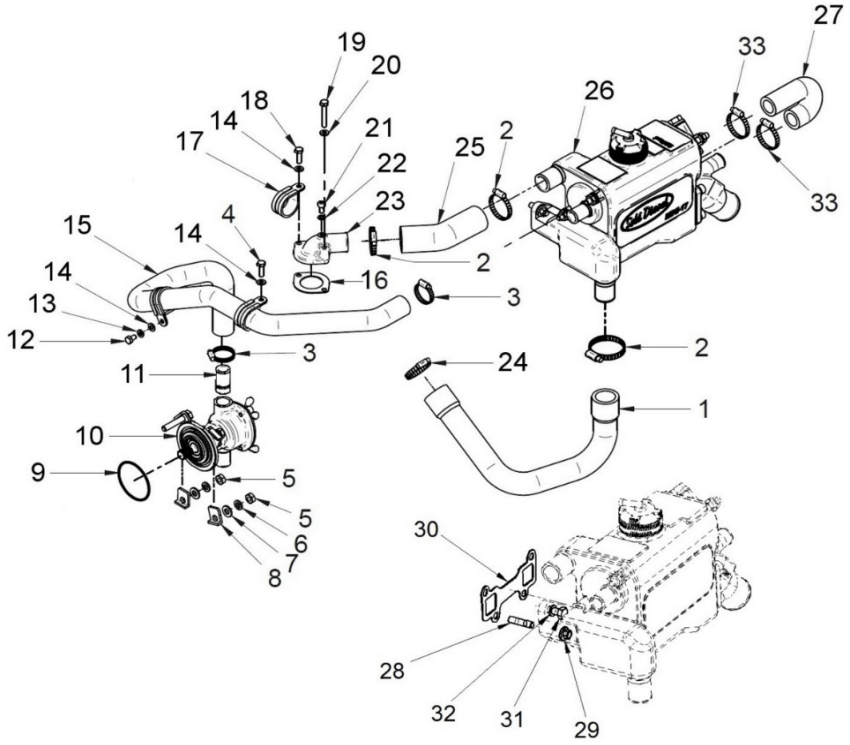

[NP] Not provided

Cooling System

13811036			Water Cooler Assy MINI-17 v6		
FIG.	REF.	QTY	DESCR.	FROM	UPTO
1	13811037	1	Body, Water Cooler MINI-17 v6 [NP]		
2	13811010	1	Cap		
3	13811034	2	Raccord 3/4"		
4	13811039	1	Tubular Bundle		
5	13811007	2	O-Ring D. 57X2,5		
6	13811002	1	Water Cooler Cover		
7	13811033	1	Raccord 1/2"		
8	13311006	4	Stud,cover		
9	51030008	4	Washer DIN 125-8		
10	53033008	4	Washer GROWER DIN 127-8		
11	54120008	4	Nut DIN 934 M8		
12	54102306	1	Bolt DIN 933 M10-16 INOX.		
13	56000061	1	Washer 10-16-1,5		
14	13811042	1	Water Cooler Cover		
15	13811043	1	Engine Anode		
16	56000073	1	Copper Washer 16-23-1,5		
17	18011009	1	Anode Plug		

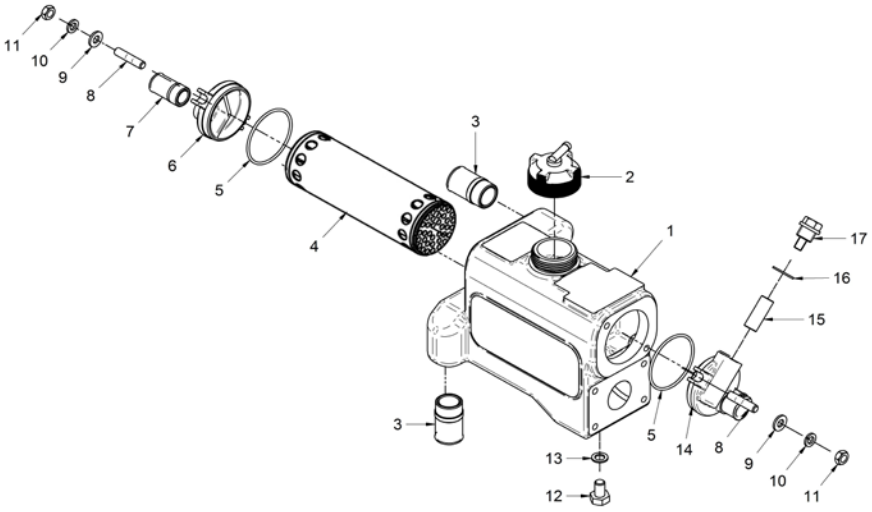

[NP] Not provided

Cooling System

37611000			1/2" Pump Water, Set		
FIG.	REF.	QTY	DESCR.	FROM	UPTO
1	54102154	3	Bolt DIN 933 M6-10 INOX		
2	37611002	1	Cover Pump		
3	37611003	1	O-Ring D. 57x1,5		
4	31211008	1	1/2" Impeller		
5	37611026	1	Plate, Friction		
6	33811010	1	Shaft,Water Pump		
7	33411019	1	Seal		
8	33311013	1	O-Ring D. 15X2		
9	37611001	1	Body, Water Pump 1/2"		
10	33411020	1	Seal		
11	33411014	2	Ball Bearing 6002-C3		
12	33811015	1	Spacer		
13	53041032	1	CIRClip DIN 472 I-32		

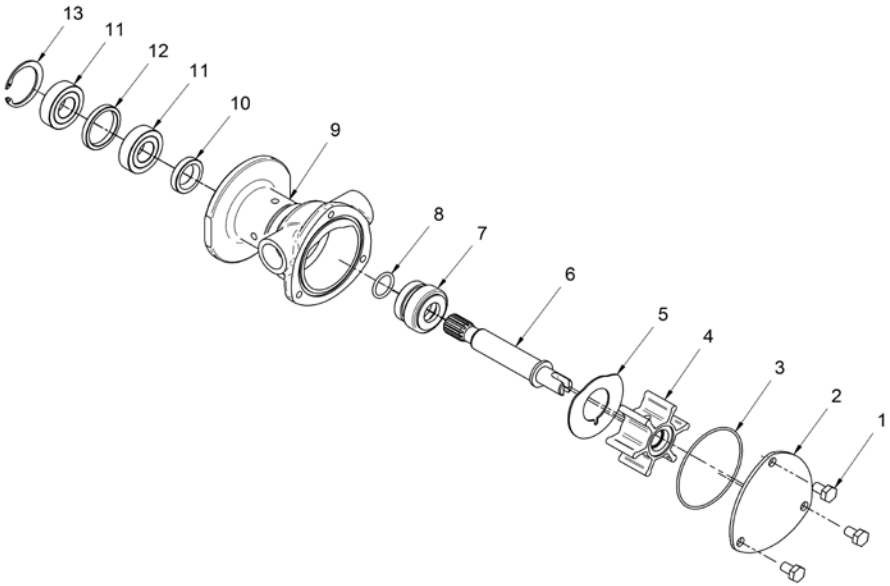

D_MIA3_3_5			Wet Exhaust		
FIG.	REF.	QTY	DESCR.	FROM	UPTO
1	13813026	1	Elbow,WET Exhaust		
2	52103257	4	Bolt DIN 912 M8-20 8.8		
3	53033008	4	Washer GROWER DIN 127-8		
4	17613014	1	Gasket		

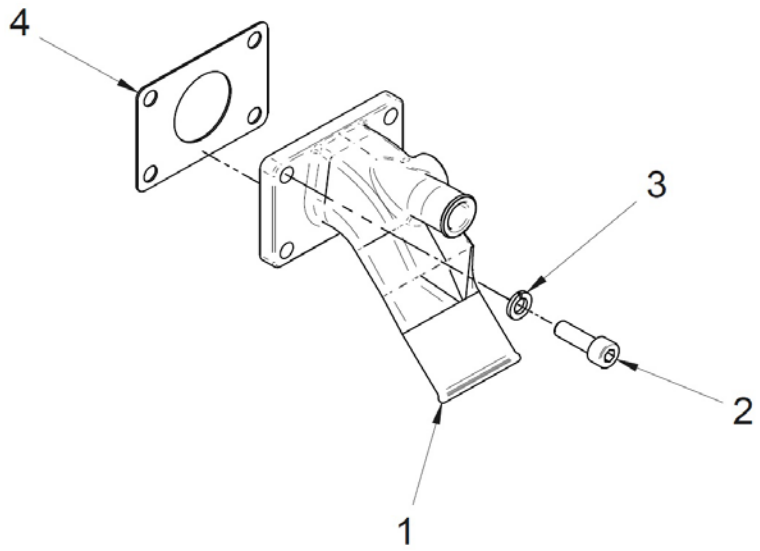

D_MIA1_4_1			Fuel Pipe		
FIG.	REF.	QTY	DESCR.	FROM	UPTO
1	17624015.4	1	Pipe Injection N.1		
2	17624016.4	1	Pipe Injection N.2		
3	13824024.4	2	Nut		
4	13824026	1	Tube Gas-Oil SPILL		
5	17424025G.1	2	Gasket Fuel Return (Genset)		
6	13824013	2	Injector Washer		
7	17624027	4	Bolt		
8	13824005	0	Shim Adjusting T=0,5MM. [VAR]		
9	13824006	0	Shim Adjusting T=0,4MM. [VAR]		
10	13824007	0	Shim Adjusting T=0,6MM. [VAR]		
11	13824008	0	Shim Adjusting T=0,7MM. [VAR]		
12	13824009	0	Shim Adjusting T=0,8MM. [VAR]		
13	13824010	0	Shim Adjusting T=0,9MM. [VAR]		
14	13824011	0	Shim Adjusting T=1,0MM. [VAR]		
15	13824003	0	Shim Adjusting T=0,2MM. [VAR]		
16	13824004	0	Shim Adjusting T=0,3MM. [VAR]		

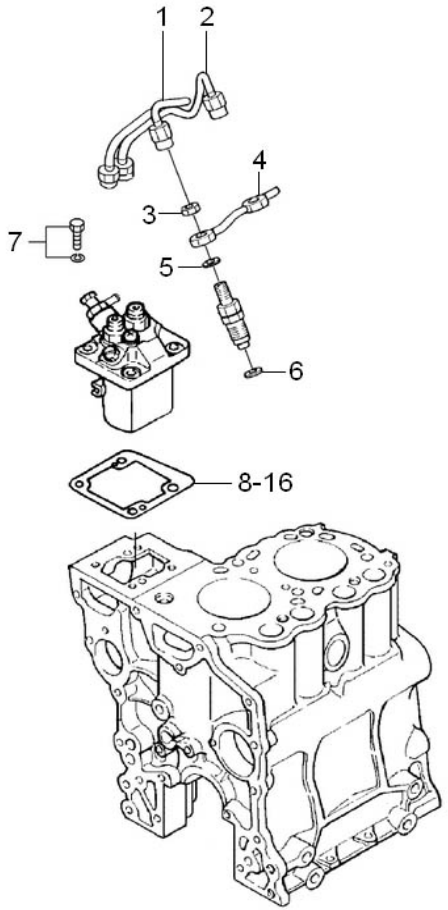

[VAR] Variable according to repair

D_MIA2_4_2			Injection Nozzle		
FIG.	REF.	QTY	DESCR.	FROM	UPTO
1	13826001	2	Nozzle & Holder A		
1A	13826002	2	Body Assy		
1BA	13826010	2	Washer 1,25		
1BB	13826011	2	Washer 1,30		
1BC	13826012	2	Washer 1,35		
1BD	13826013	2	Washer 1,40		
1BE	13826014	2	Washer 1,45		
1BF	13826015	2	Washer 1,50		
1BG	13826016	2	Washer 1,55		
1BH	13826017	2	Washer 1,60		
1C	17126004	2	Spring, pressure		
1CI	13826019	2	Washer 1,65		
1CJ	13826020	2	Washer 1,70		
1D	13826003	2	Pin Pressure		
1E	13826007	2	PIECE DISTANCE		
1F	17626018	2	Nozzle Assy		
1G	17226006	2	Nut, Nozzle RETAINING		
1H	13824013	2	Injector Washer		

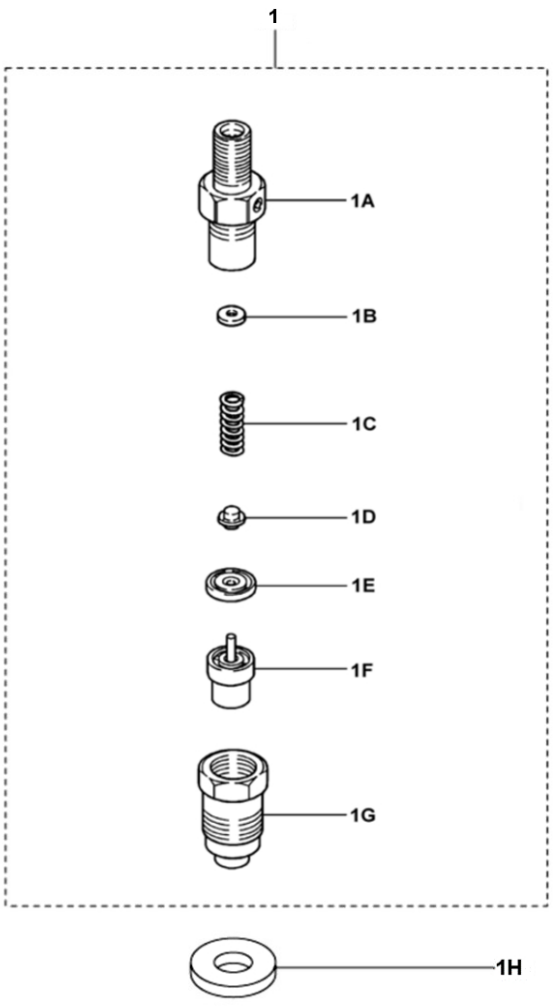

D_MIA2_4_3			Fuel Injection Pump		
FIG.	REF.	QTY	DESCR.	FROM	UPTO
1	13825005	1	Housing Assy		
2	17625004.4	2	Holder		
3	17625033.4	2	O-Ring		
4	13925002G	2	Spring [NP]		
5	13925007G	2	Gasket DELIVERY V [NP]		
6	17625008.4	2	Valve SUB Assy		
7	13925009G	2	Element SUB Assy [NP]		
8	13825010	2	SLEEVE SUB Assy		
9	13925011G	2	Seat [NP]		
0	13825001.4	1	Pump Assy,Fuel Injection		
10	13925012G	2	Spring [NP]		
11	13925013G	2	Seat [NP]		
12A	13925015G	2	Plate Tappet Shim 1,85		
12B	13825016G	2	Plate Tappet Shim 1,90		
12C	13925017G	2	Plate Tappet Shim 1,95		
12D	13925018G	2	Plate Tappet Shim 2,00		
12E	13925019G	2	Plate Tappet Shim 2,05		
12F	13925020G	2	Plate Tappet Shim 2,10		
12G	13925021G	2	Plate Tappet Shim 2,15		
12H	13925022G	2	Plate Tappet Shim 2,20		
12I	13925023G	2	Plate Tappet Shim 2,25		
12J	13925024G	2	Plate Tappet Shim 2,30		
12K	13925025G	2	Plate Tappet Shim 2,35		
12L	13925026G	2	Plate Tappet Shim 2,40		
12M	13925027G	2	Plate Tappet Shim 2,45		
12N	13925028G	2	Plate Tappet Shim 2,50		
13	13925029G	2	TAPPET Assy [NP]		
14	13825026	1	Screw Air		
15	13925031G	1	Washer,DRAIN Screw [NP]		
16	13825027	1	Screw HOLLOW		
17	17325029.3	1	Nipple Swivel		
18	13825025.3	2	Washer [NP]		
19	13925030G	2	Plate Set [NP]		
20	13925032G	2	Screw,W/Washer [NP]		
21	13825006	1	RACK		

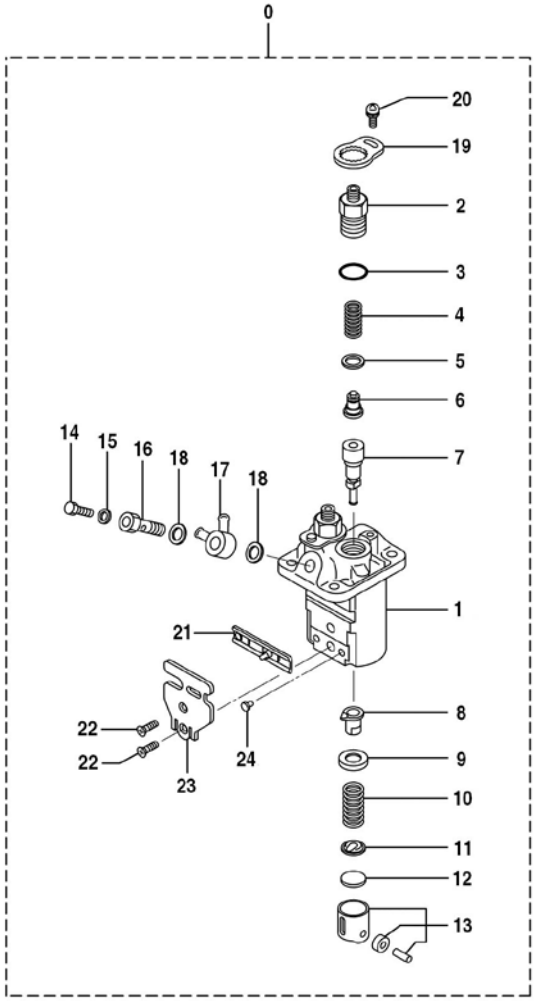

[NP] Not provided

D_MIA2_4_3			Fuel Injection Pump		
FIG.	REF.	QTY	DESCR.	FROM	UPTO
22	13825062	2	Screw		
23	13825063	1	Bracket		
24	13925034G	2	Pin Tappet Guide [NP]		

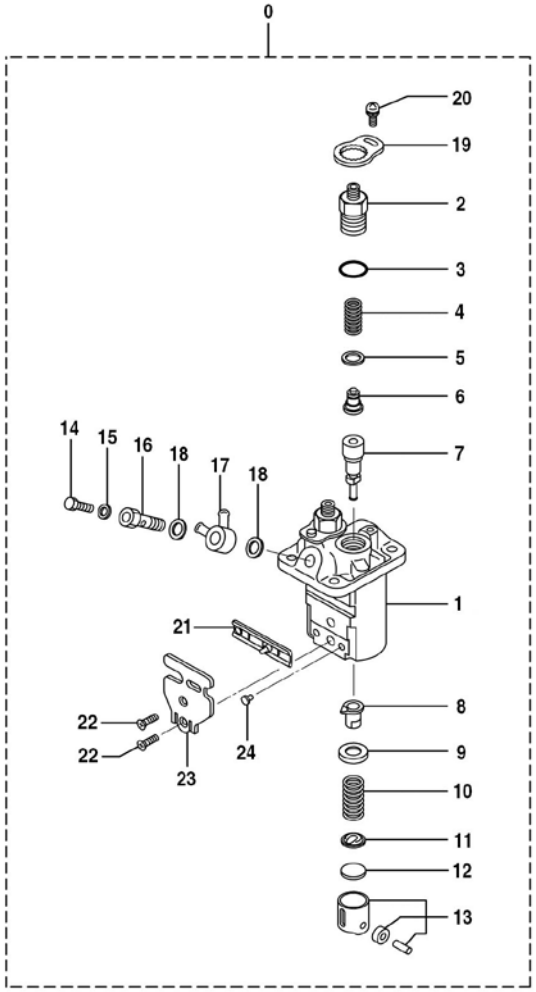

D_MIA2_4_4			Governor Parts		
FIG.	REF.	QTY	DESCR.	FROM	UPTO
1	17623020.4	1	Metal,Fuel		
2	17623019.4	1	Wire		
3	13123017	1	Bolt High Speed		
4	17223017.4	1	Bolt		
5	17623005.4	1	Stopper [NP]		
6	13823001	1	WEIGHT Assy,GOverNOR		
7	60530009	1	Shaft Assy,sliding		
8	17623014.4	1	Gasket Tie Rod CO		
9	13923005	1	ROD TIE		
10	13923006	1	Spring,TIE ROD		
11	17623032.4	1	Cover,Governor		
12	17623033.4	1	Gasket Governor Cover [NP]		
13	13823042	1	Cap TORQUE Set SE		
14	17623043.4	1	Cover TIE ROD		
15	13823015	1	Spring GOverNOR		
16	(*)	1	Not available [NP]		
16A	17223035	1	Nut		
16B	13823034	1	RACK Set Screw (new)		
17	17623003.4	1	Lever Assy Governor		
18	13823007	1	Lever Assy TENSIO		
19	17623006.4	1	Shaft Governor		
20	13823044	1	Spring TIE ROD		
21	17623008.4	1	Lever Assy SPEED		
22	13823027	1	Lever Governor SP		
23	13823036	1	Spring START		
24	17623009.4	2	Pin GROOVED		
25	52102155	4	Bolt DIN 933 M6-12 8.8		
26A	52102154	2	Bolt DIN 933 M6-10 8.8		
26B	53033006	2	Washer GROWER DIN 127-6		
27	52102156	4	Bolt DIN 933 M6-16 8.8		
28	13823011	1	Bolt,W/Washer		
29	17223032	2	Nut		
30	17223030	1	Nut		
31	53033008	1	Washer GROWER DIN 127-8		
32	13123021	1	O-Ring D. 7X1.8		

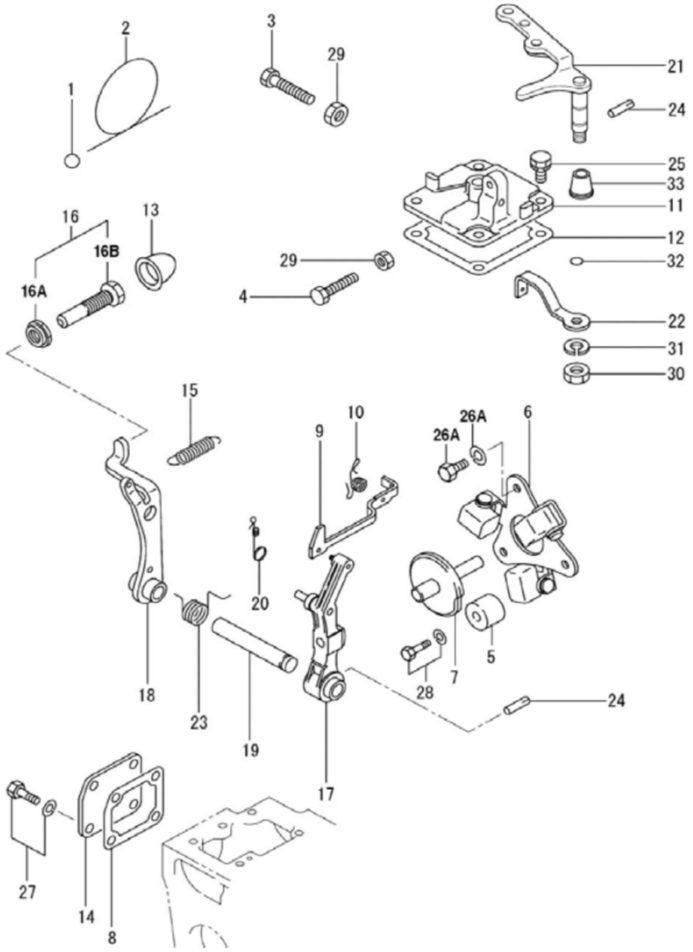

[NP] Not provided

D_MIA2_4_4			Governor Parts		
FIG.	REF.	QTY	DESCR.	FROM	UPTO
33	17623045.4	1	Cover,Governor Shaft		

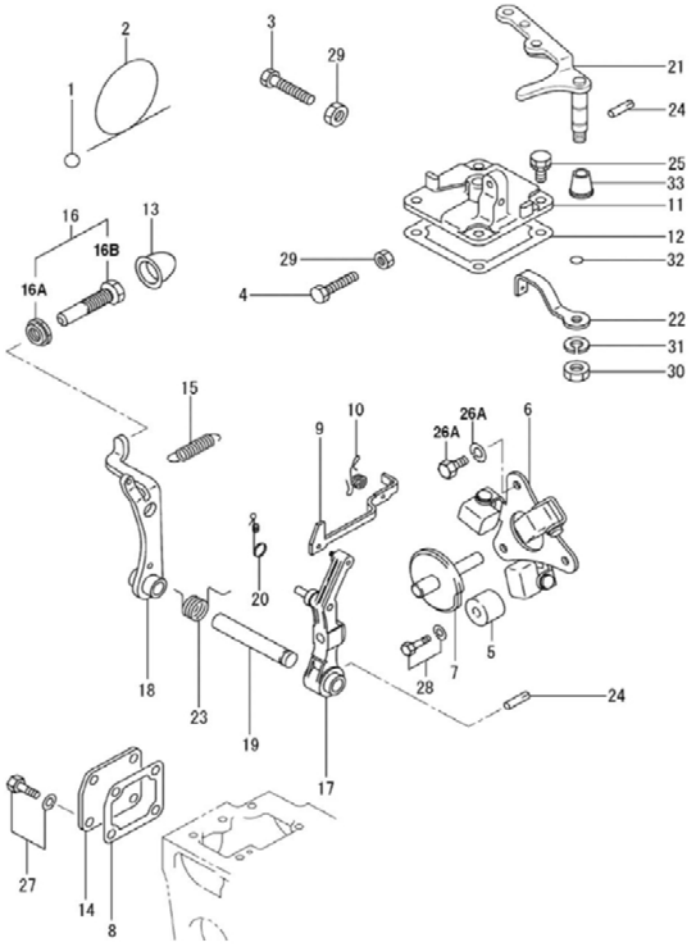

D_MIA3_4_5			Fuel Supply Parts		
FIG.	REF.	QTY	DESCR.	FROM	UPTO
1	12814051	2	Screw,eye		
2	57000369	4	Washer 14,2-20-1,5		
3	17214012	2	COLLAR,Union		
4	13114020	1	Cover,filter		
5	13114022	1	Gas-Oil Filter Element		
6	13814017.5	1	Fuel Pump Hose		
7	51086016	3	ONE EAR Clamp With INTERIOR Ring		
8	51031008	2	Washer DIN 9021 8		
9	52102257	2	Bolt DIN 933 M8-20 8.8		
10	13814026	1	Hose		
11	51086011	4	ONE EAR Clamp With Interior Ring		
12	17614026	1	0,04 M. Hose		
13	17614028	1	Bypass "T"		
14	13814027	1	Assy,Fuel Return		
15	56000205	1	Washer 10-16-3		

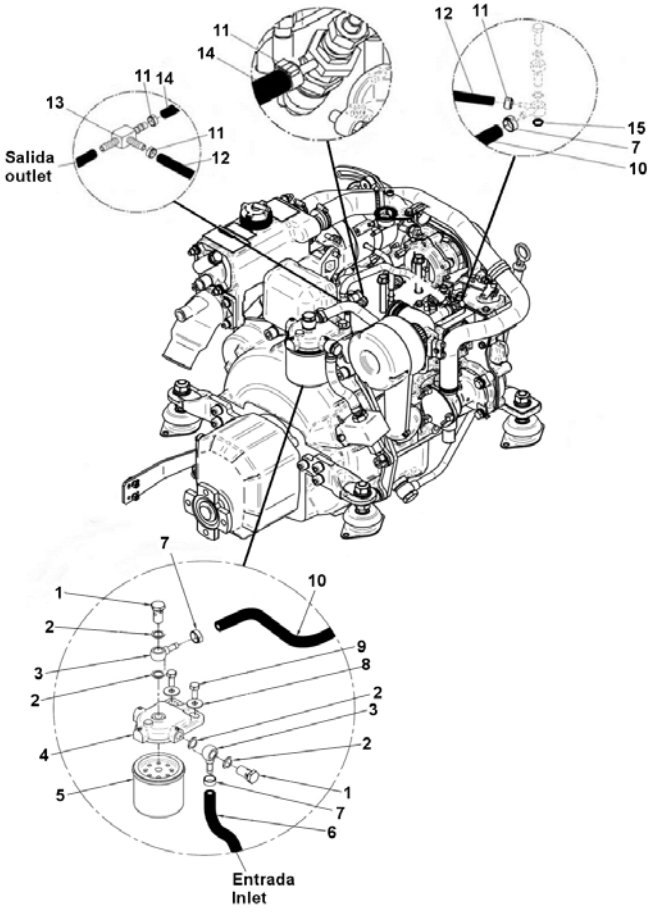

D_MIA3_5_1			Kit Alternator 14V/75A		
FIG.	REF.	QTY	DESCR.	FROM	UPTO
1	13817012	1	Alt. 14V/75A		
2	13817019	1	Pulley Alternator		
3	13817018	1	Spacer		
4	13817015	1	Plate		
5	51030006	2	Washer DIN 125-6		
6	53033006	2	Washer GROWER DIN 127-6		
7	52102158	1	Bolt DIN 933 M6-25 8.8		
8	52101166	1	Bolt DIN 931 M6-65 8.8		
9	52102257	1	Bolt DIN 933 M8-20 8.8		
10	51031008	1	Washer DIN 9021 8		
11	52101275	1	Bolt DIN 931 M8-120 8.8		
12	53038008	1	Washer DIN 6798-A 8		
13	17117002	1	Spacer 8,5X20X5		
14	13817118	1	Spacer 8,5x20x28		
15	51030008	1	Washer DIN 125-8		
16	53033008	1	Washer GROWER DIN 127-8		
17	52120008	1	Nut DIN 934 M8 8.8		
18	17617027	1	V-Belt		

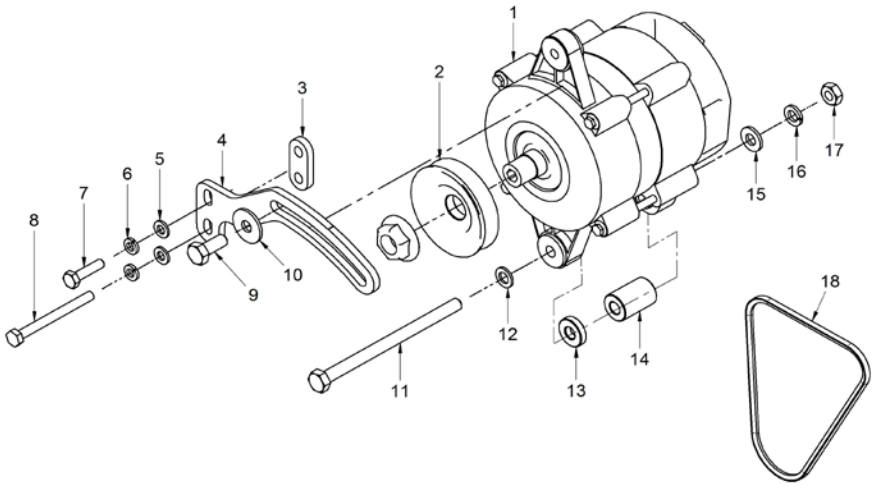

D_MIB1_5_5			Starter Assy		
FIG.	REF.	QTY	DESCR.	FROM	UPTO
1	13827002	1	Starter Assy 12 V		
2	52102259	2	Bolt DIN 933 M8-30 8.8		
3	53033008	2	Washer GROWER DIN 127-8		

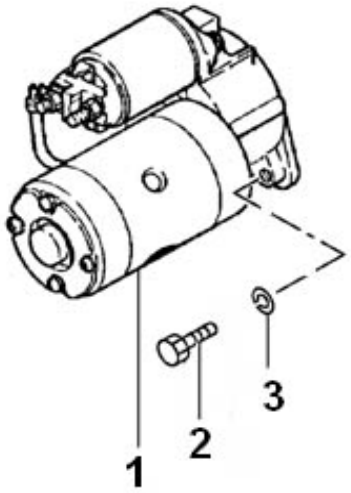

Electrical System

D_MIA3_5_3			Electrical Wiring		
FIG.	REF.	QTY	DESCR.	FROM	UPTO
1	13817003	1	Cover		
2	13827005	1	Glow Relay		
3	51030006	2	Washer DIN 125-6		
4	52102154	3	Bolt DIN 933 M6-10 8.8		
5	51030005	1	Washer DIN 125-5		
6	52102104	1	Bolt DIN 933 M5-10 8.8		
7	13817007	1	Rubber Cover		
8	53203358	2	Bolt DIN 912 M12-1,25-25 12.9	06/06/2017	
8	53203359	2	Bolt DIN 912 M12-1,25-30 12.9		05/06/2017
9	53033012	2	Washer GROWER DIN 127-12		
10	13817006	1	Cover		
11	13817005	1	Relay 6V		
12	13817002	1	Support,relay		
13A	60938210.1	1	Engine Wiring Ext. 3 M. SUPERSEAL		
13B	60985210.1	1	Engine Wiring Ext. 4 M. SUPERSEAL		
13C	60985210.12.1	1	Engine Wiring Ext. 12 M. SUPERSEAL		
13D	60985210.24.1	1	Engine Wiring Ext. 24 M. SUPERSEAL		
14	17627017.4	2	Plug,glow		
15	13827018.4	1	Plate Glow Plug		
16	60934040	1	Wirine		
17	13824020	1	SOLENOID		
18	13425029	1	Nut (old)		
19	60938204	1	Wiring,electrical MINI 17-26		
20	51031006	1	Washer DIN 9021 6		

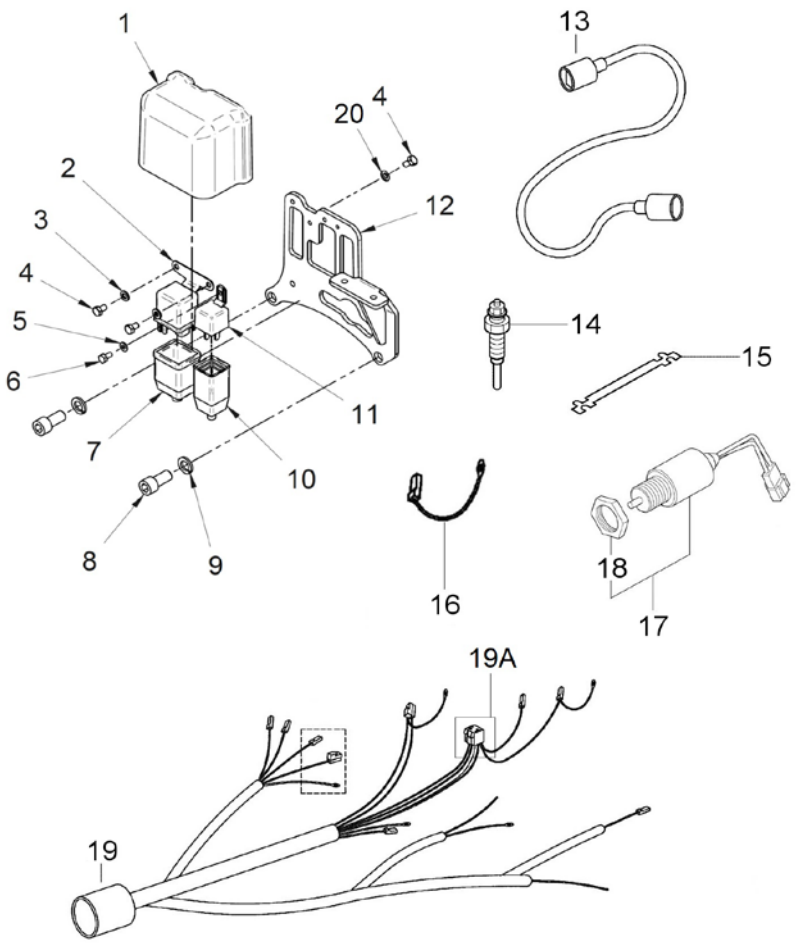

D_60938130			SVT 20 MINI-17/29 Panel		
FIG.	REF.	QTY	DESCR.	FROM	UPTO
1	60938005.1	1	Panel N.2		
2	60900301.2	1	V3 C.I. 12V Prop. Engine Board.Varnished [NP]		
3	54108003	2	Bolt DIN 84 M3-8 INOX.		
4	60900910.1	1	MTG Bracket 3" LG GA AMEGA		
5	60900910.2	3	Nut 8-32 W/CapTIVE STAR Washer		
6	60900037.2	1	Connector		
7	60900915.2	1	MTG Bracket		
8	60900037	1	Key-Locking		
9	60900931	2	SOCKET,WEDGE BASE		
10	60900929	2	Bulb 12V		
11	60900937	1	Water Gauge 12 V		
12	60938911	1	Tachometer MINI-17/26 SVT		
13	60900096	1	Cover Plate for Motor Propeller		
14	60938006.1	1	Gasket Panel		
NS	60900091	1	MICRO Relay 12V 12-20 [NS]		
NS	60910012	1	System Back Panel SVT/MVT 20 12V [NS]	07/12/2016	

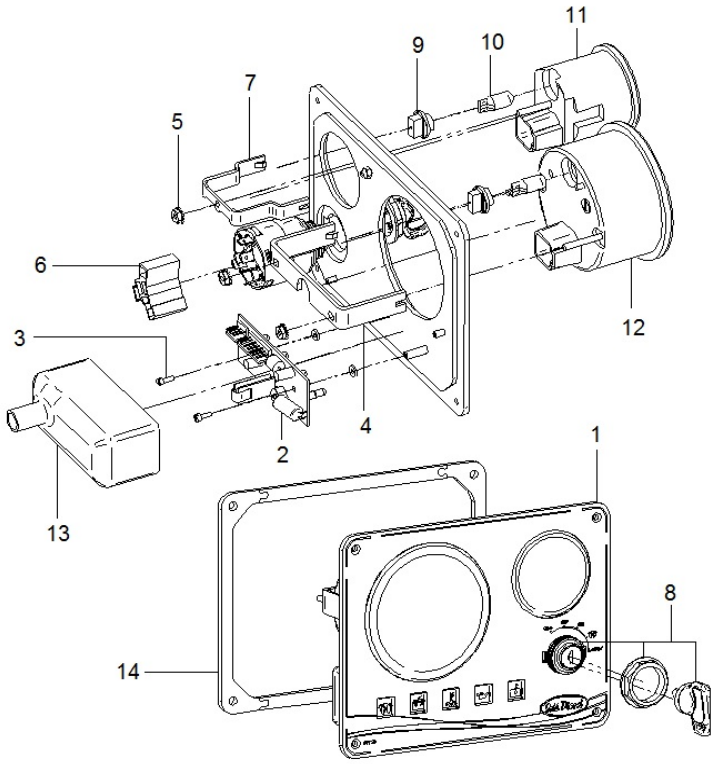

[NP] Not provided
[NS] Not shown

Electrical System

D_60938132			SVT 30 MINI-17/29 Panel		
FIG.	REF.	QTY	DESCR.	FROM	UPTO
1	54108003	2	Bolt DIN 84 M3-8 INOX.		
2	60900037	1	Key-Locking		
3	60900037.2	1	Connector		
4	60900910.2	5	Nut 8-32 W/CapTIVE STAR Washer		
5	60900931	4	SOCKET,WEDGE BASE		
6	60900929	4	Bulb 12V		
7	60990005.1	1	Panel N.3		
8	60990006.1	1	Gasket Panel		
9	60900096	1	Cover Plate for Motor Propeller		
10	60900301.2	1	V3 C.I. 12V Prop. Engine Board.Varnished [NP]		
11	60900910.1	1	MTG Bracket 3" LG GA AMEGA		
12	60900915.2	3	MTG Bracket		
13	60900941	1	VOLTMETER 12V		
14	60938911	1	Tachometer MINI-17/26 SVT		
15	60900937	1	Water Gauge 12 V		
16	60900939	1	Oil Pressure Gauge 12V		
NS	60900091	1	MICRO Relay 12V 12-20 [NS]		
NS	60910014	1	System Back Panel SVT/MVT 30 12V [NS]	07/12/2016	

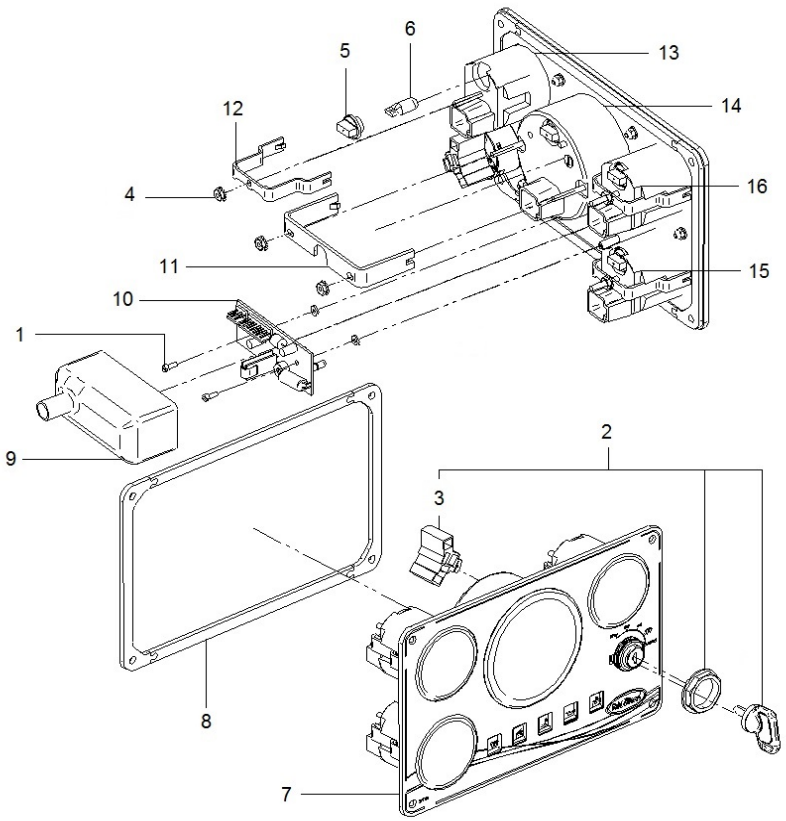

[NP] Not provided
[NS] Not shown

Maintenance Kit

D_13820101.6			Kit Gasket		
FIG.	REF.	QTY	DESCR.	FROM	UPTO
1	17121013	1	Gasket		
2	17620018.4	1	Gasket Front Plate [NP]		
3	17620016.4	1	Gasket Oil Seal C		
4	17620012.4	1	Gasket Cover		
5	17620040.4	1	Gasket Gear Case [NP]		
6	13820033.4	1	Gasket Oil PAN		
7	13821032.4	1	Gasket Intake COV		
8	17621022.4	1	Gasket Water Pump		
9	17621033.4	1	Gasket Thermostat		
0	13820101	1	Kit Gasket		
10	17623014.4	1	Gasket Tie Rod CO		
11	17623033.4	1	Gasket Governor Cover [NP]		
12	13123021	1	O-Ring D. 7X1.8		
13	13821038	2	O-Ring D. 9X2		
14	13820044	2	O-Ring D. 11X2,5		
15	13721007	1	O-Ring D. 30X3		
16	13120032	2	Washer 18-23-1,5 [NP]		
17	17424025G.1	2	Gasket Fuel Return (Genset)		
18	13824013	2	Injector Washer		
19	13222054	4	Seal Valve Stem		
20	13821031	1	Gasket Water OutL		
21	13820002	4	Seal Side		
22	13821035	1	Gasket Exhaust Manifold		
23	13821004	1	Gasket Cylinder Head		
24	13821010	1	Gasket Rocker Cover		
25	13925031G	1	Washer,DRAIN Screw [NP]		
26	13825025.3	2	Washer [NP]		
27	13811007	2	O-Ring D. 57X2,5		
28	17613014	1	Gasket		
29	37611003	1	O-Ring D. 57x1,5		
30	17011007	1	O-Ring D. 57X3		

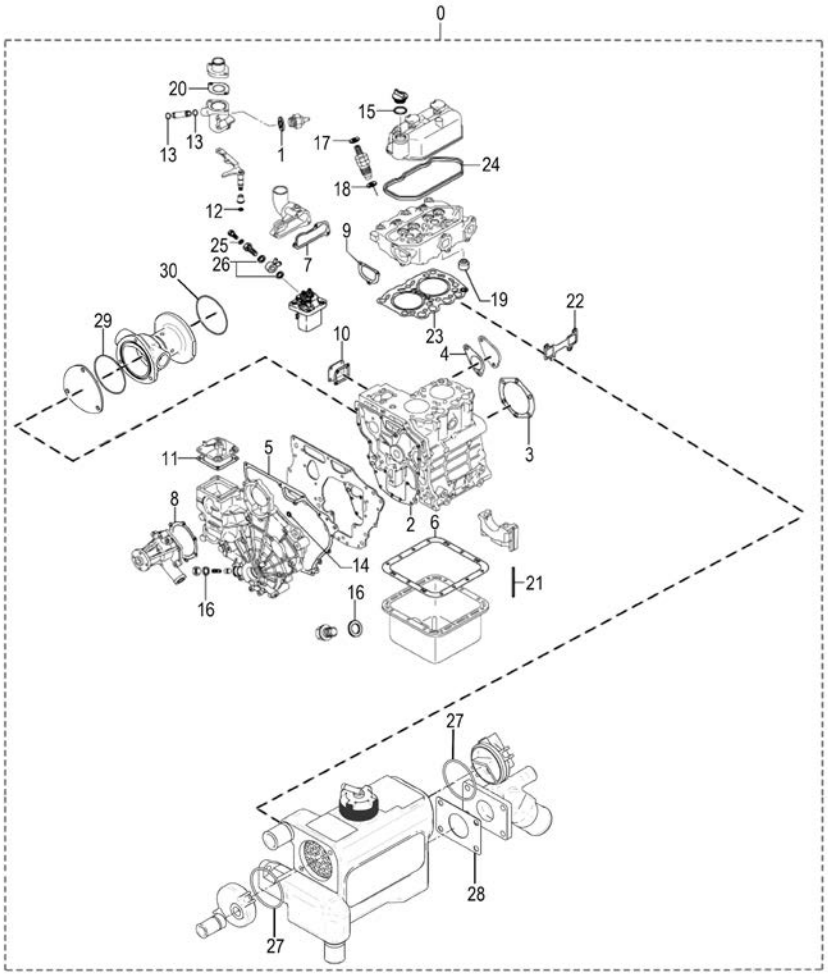

[NP] Not provided

Maintenance Kit

	13811100.6		Pipe Rubber Set,water line 6 V.		
FIG.	**REF.**	**QTY**	**DESCR.**	**FROM**	**UPTO**
1	13811028	1	Sleeve Rubber		
2	13811029	1	Sleeve Rubber		
3	13811030	1	Sleeve Rubber		
4	13811032	1	Elbow		

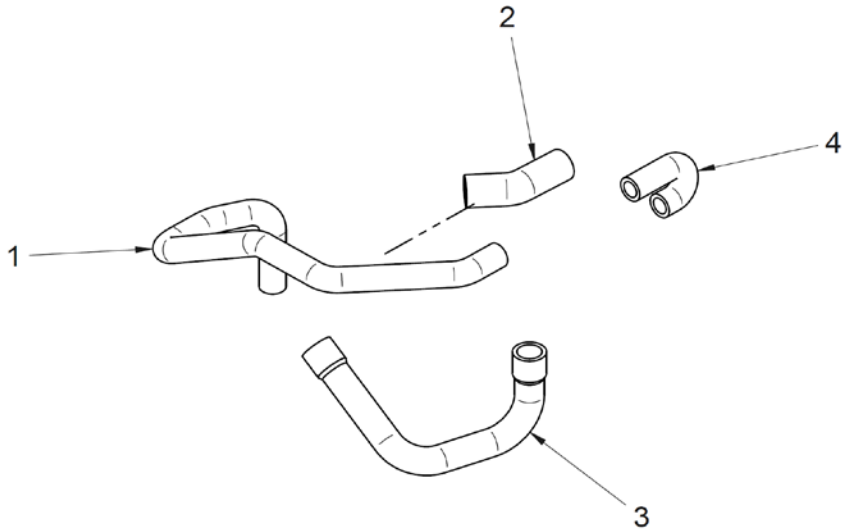

Maintenance Kit

37611000K			Repair Kit Water Pump 1/2"		
FIG.	REF.	QTY	DESCR.	FROM	UPTO
1	31211008	1	1/2" Impeller		
2	37611003	1	O-Ring D. 57x1,5		
3	33411020	1	Seal		
4	33411019	1	Seal		
5	33311013	1	O-Ring D. 15X2		
NS	17011007	1	O-Ring D. 57X3 [NS]		

[NS] Not shown

Gearbox TMC-40P

	D_5033_1		Sheet 1/2		
FIG.	**REF.**	**QTY**	**DESCR.**	**FROM**	**UPTO**
1	24860002P	1	Box		
2	24860208	1	Gear Ratio 3:1		
4	24860001P	1	Cover		
6	24860076	2	Shim		
7	24860307	1	Washer		
8	24860217	4	Spacer		
9	24860304	1	Spacer		
11	24863101	1	Input Shaft		
11	24864101	1	INPUT Shaft		
12	24860201	1	Output		
14	24860301	1	INTERMEDIATE Shaft		
19	24860222	2	Nut		
20	24810065	1	Plug		
22	24860202	1	Clutch		
23	24860302	1	Gear		
24	24860210	1	Gear		
25	24863203	1	Gear R.2,00		
25	24864203	1	Gear R.2,60		
26	24860224	1	Flange Output		
27	24860008P	1	Gauge		
29	24860205	2	CAGE		
31	24830011	1	Plug		
33	24860103	2	Oil Seal		
35	24860204	2	Bearing, needle		
36	24860306	2	Bearing, needle		
37	24860104	1	Ball Bearing 6304		
38	24860105	1	Bearing		
39	24810063	1	Plane Washer		
40	56000081	1	Washer 20-26-1,5		
43	24860092	8	Washer		
44	24850093	4	Washer		
46	24860023	2	Pin		
47	52102158	8	Bolt DIN 933 M6-25 8.8		
50	52105258	1	Bolt DIN 7991 M8-25 10.9		
51	52103259	4	Bolt DIN 912 M8-30 8.8		

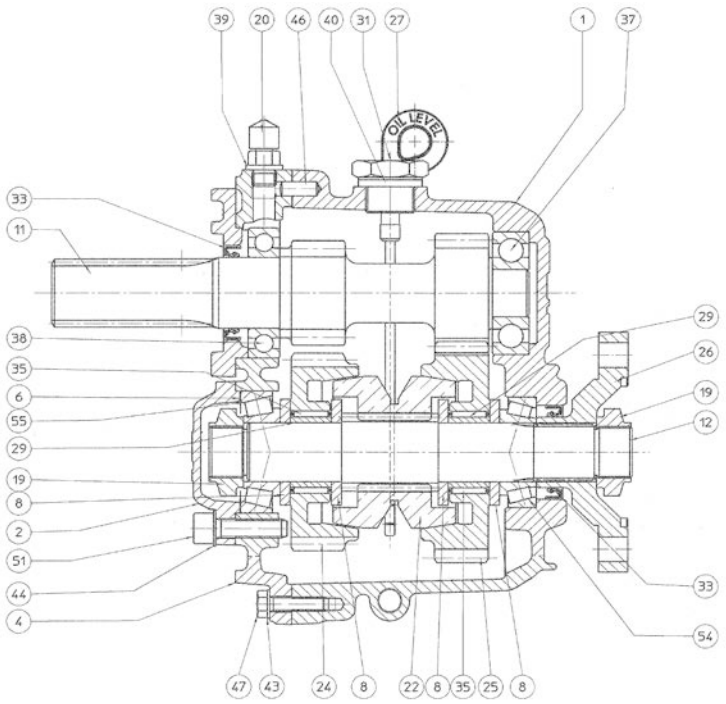

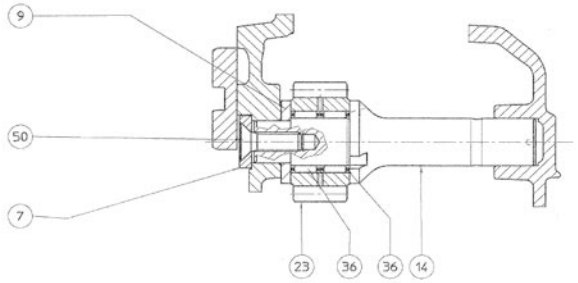

[NS] Not shown

Gearbox TMC-40P

D_5033_1			Sheet 1/2		
FIG.	REF.	QTY	DESCR.	FROM	UPTO
54	24860206	1	Conical Roller Bearing 32005		
55	24860207	1	Conical Roller Bearing 30205A		
NS	24860450	1	Kit GasketS [NS]		

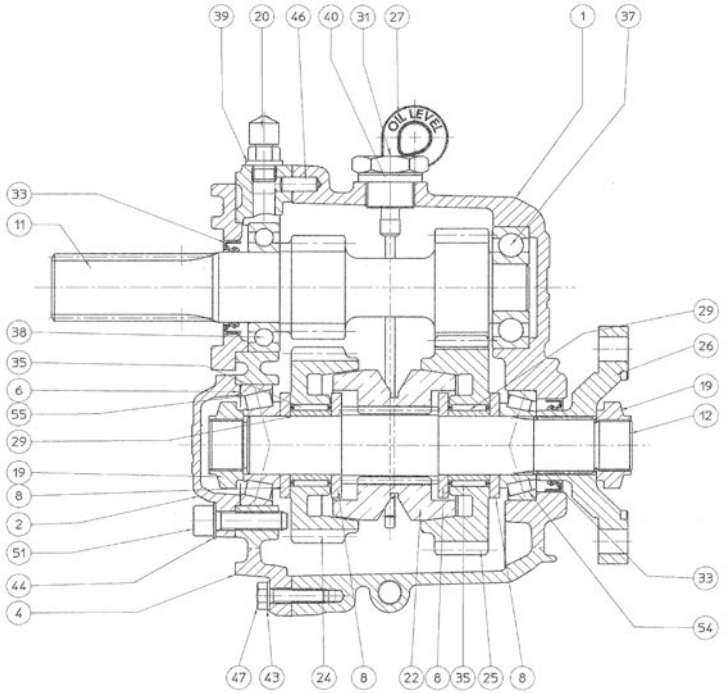

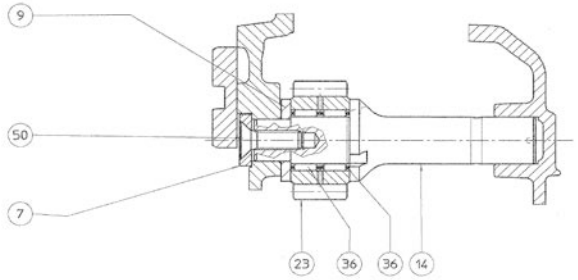

Gearbox TMC-40P

D_5033_2			Sheet 2/2		
FIG.	REF.	QTY	DESCR.	FROM	UPTO
3	24860401	1	Cover		
5	24860003P	1	Cover		
10	24860411	1	Spring		
13	24860402	1	Shaft		
15	24850005	1	Plate, IDENTIFICATION		
16	24860006	1	ATF Oil Plate		
17	24860419	1	Pin		
18	24810424	1	Lever		
21	24860423	1	PAD		
28	24860409	1	Screw		
30	24850011	1	Plug,oil drain		
32	24860404	1	Oil Seal		
34	24860417	1	O-Ring		
39	24810063	1	Plane Washer		
41	24810530	2	Washer DIN 125-8 [NP]		
42	24810014	2	Washer GROWER DIN 127-8 [NP]		
45	53052210	1	Pin DIN 1481 3-20		
48	52103157	6	Bolt DIN 912 M6-20 8.8		
49	52102258	1	Bolt DIN 933 M8-25 8.8		
52	24860011P	2	Stud		
53	24860071	2	STUD		
56	24810515	2	Nut DIN 934 M8 8.8 [NP]		
57	51123008	1	Nut DIN 985 M8 5.6		

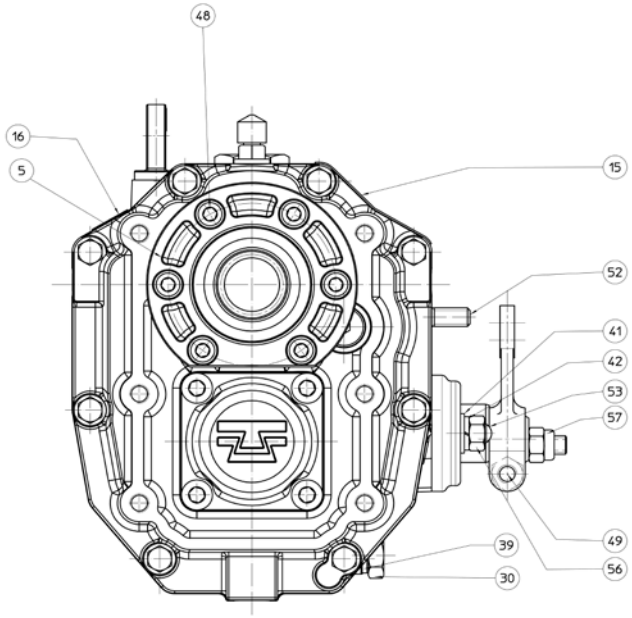

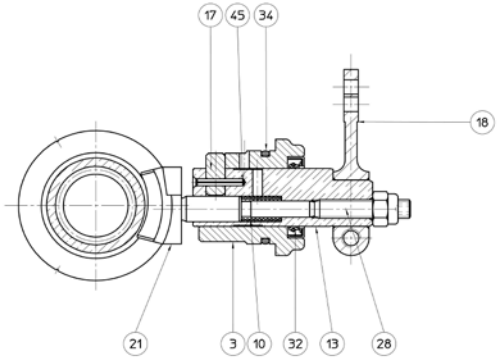

[NP] Not provided

Gearbox TMC-40P

D_5033_3			Maintenance Kit		
FIG.	REF.	QTY	DESCR.	FROM	UPTO
1	24860450	1	Kit GasketS		
2	A0201000	2	ATF Sole Diesel Oil 1L		

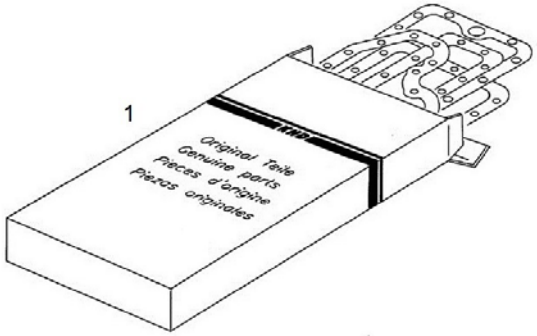

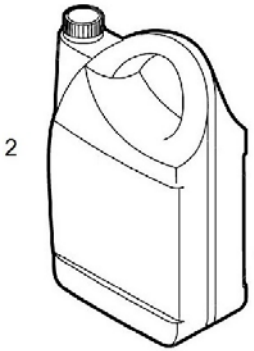

SP60 S.Drive

D_5037_1			Sheet 1/4 SP60 S.Drive V1		
FIG.	REF.	QTY	DESCR.	FROM	UPTO
13	24813500.13	1	Body [NP]		
26	24813500.26	6	Washer		
27	24860047	6	Bolt DIN 912 M8-30 8.8 [NP]		
38	24813500.38	1	Bracket Control		
39	24810424	1	Lever		
40	24810047	1	Bolt DIN 933 M8-25 8.8 [NP]		
50	24813500.50	1	Flange CLOSING MEMBRANE		
53	24810063	2	Plane Washer		
54	24810065	1	Plug		
55	24813500.55	1	Gauge Oil LEVEL		
59	24813500.59	1	Body		
71	24813500.71	8	Washer [NP]		
72	24813500.72	8	Screw		
73	24813500.73	1	Propeller Shaft		
78	24813500.78	1	Body		
84	24813500.84	1	Anode SP60		
85	24813500.85	1	Spacer		
87	24813500.87	1	Plug,oil drain		
89	24813500.89	4	Bolt DIN 933 M6-10 8.8 [NP]		

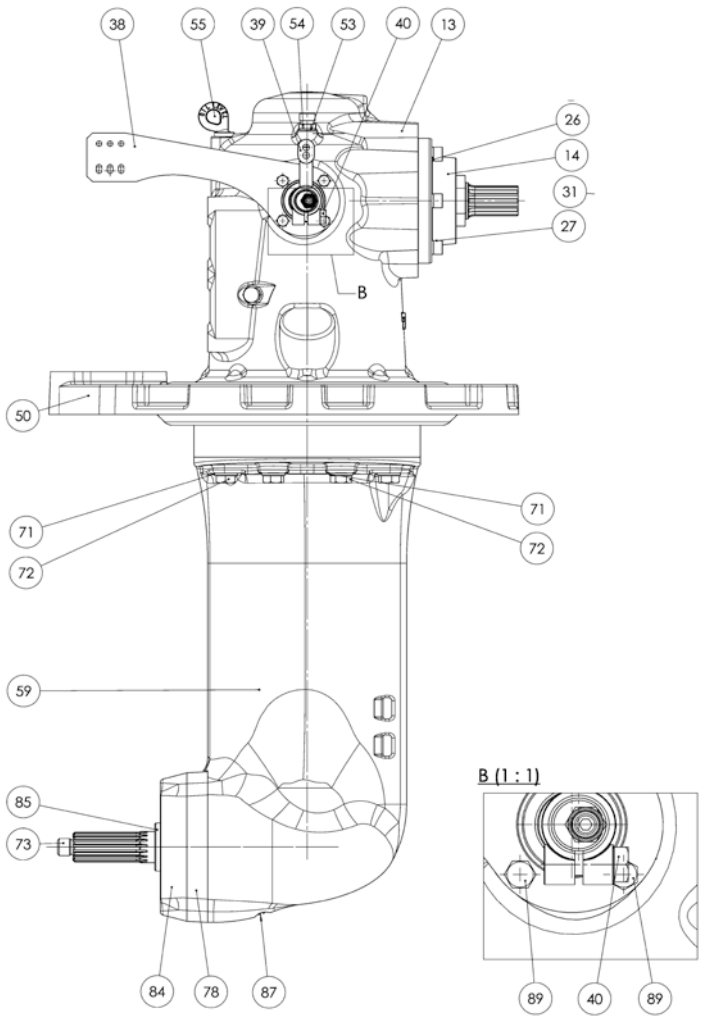

[NP] Not provided

D_5037_2			Sheet 2/4 SP60 S.Drive V1		
FIG.	REF.	QTY	DESCR.	FROM	UPTO
14	24813500.14	1	Body		
28	24813500.28	1	Body Control		
29	24860404	1	Oil Seal		
31	24860402	1	Shaft		
35	24860423	1	PAD		
43	24810522	1	Washer		
44	24813500.44	1	Plug [NP]		
45	24813500.45	1	Cover		
51	24813500.51	1	Plug [NP]		
52	24860006	1	ATF Oil Plate		
92	24830035	1	Washer		
93	24813500.93	1	Plug		

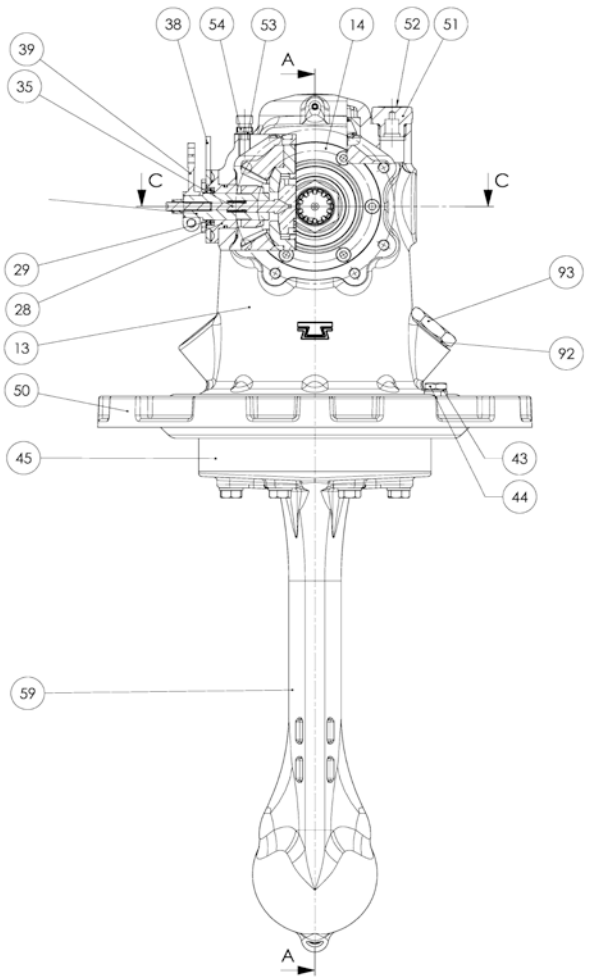

[NP] Not provided

	D_5037_3		Sheet 3/4 SP60 S.Drive V1		
FIG.	REF.	QTY	DESCR.	FROM	UPTO
1	24813500.01	1	Shaft,Output [NP]		
2	24813500.02	1	Cone Clutch		
3	24813500.03	4	Spacer [NP]		
4	24860217	2	Spacer		
5	24813500.05	2	Ring,Bearing		
6	24813500.06	4	Bearing, needle		
7	24813500.07	2	Gear		
8	24813500.08	2	Cover		
9	24813500.09	2	Nut		
10	24813500.10	2	Bearing		
11	24810333	2	Spacer		
12	24813500.12	1	Spring		
17	24813500.17	1	Shaft		
20	24813500.20	1	Screw		
41	24813500.41	1	Gasket		
42	24813500.42	1	Gasket		
46	24813500.46	2	O-Ring		
57	24810506	1	Screw		
60	24813500.60	1	Shaft		
61	24813500.61	1	Ring		
62	24860206	1	Conical Roller Bearing 32005		
63	24813500.63	1	Guide [NP]		
64	24813500.64	1	CIRClip		
65	24813500.65	1	O-Ring		
66	24813500.66	1	Bearing		
67	24813500.67	2	Spacer		
68	24813500.68	1	Gear		
69	24813500.69	2	Washer [NP]		
70	24813500.70	1	Nut		
74	24813500.74	1	Gear		
75	24850108	2	Shim Adjusting		
76	24813500.76	1	Bushing		
77	24813500.77	2	HELICOil		
79	24813500.79	2	Oil Seal		
80	24813500.80	2	O-Ring D. 90X3,5		

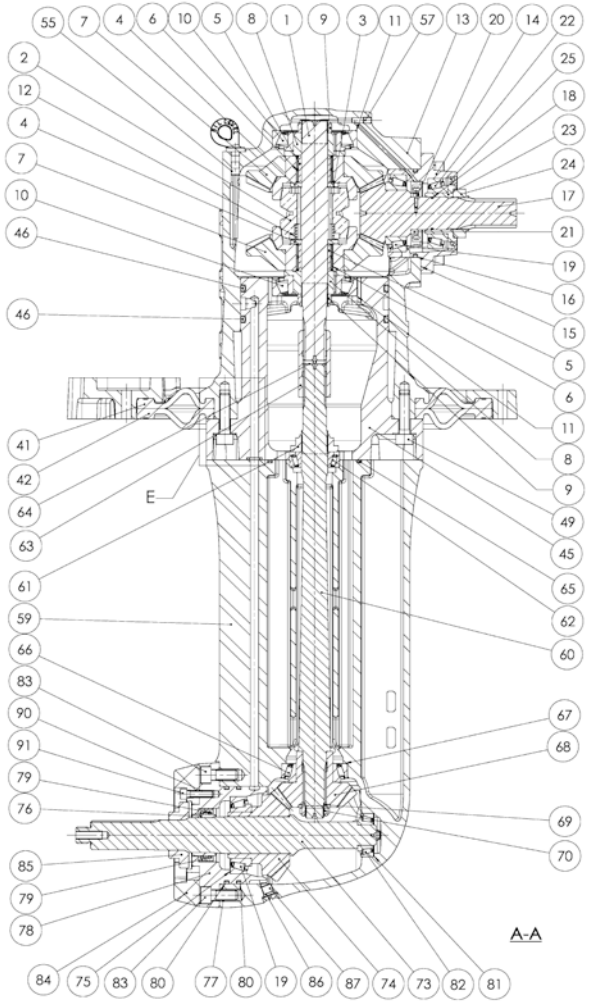

[NP] Not provided

D_5037_3			Sheet 3/4 SP60 S.Drive V1		
FIG.	REF.	QTY	DESCR.	FROM	UPTO
81	24813500.81	3	Spacer		
82	24813500.82	1	Bearing		
83	24813500.83	2	Screw		
86	24813500.86	1	O-Ring D. 8X1,5		
90	24813500.90	3	HELICOil [NP]		
91	24813500.91	3	Screw		

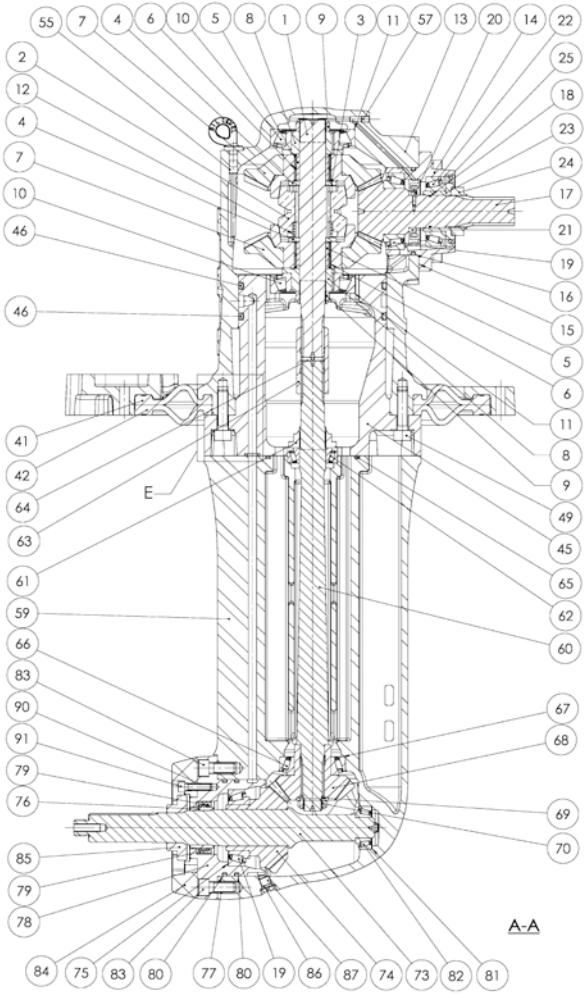

D_5037_4			Sheet 4/4 SP60 S.Drive V1		
FIG.	REF.	QTY	DESCR.	FROM	UPTO
15	24813500.15	2	Spacer		
16	24813500.16	1	O-Ring		
18	24813500.18	1	O-Ring		
19	24850104	2	Conical Roller Bearing 32009-X		
21	24813500.21	1	Impeller		
22	24813500.22	1	Bearing		
23	24813500.23	1	Cover		
24	24813500.24	1	Nut		
25	24813500.25	1	Oil Seal		
30	24860417	1	O-Ring		
32	24860419	1	Pin		
33	24860418	1	Pin DIN 1481 3-20 [NP]		
34	24860411	1	Spring		
36	24860409	1	Screw		
37	24860408	1	Nut DIN 985 M8 5.6 [NP]		
47	24813500.47	1	O-Ring		
48	24813500.48	8	Washer [NP]		
49	24813500.49	8	Screw		
56	24850011	1	Plug,oil drain		
58	24850005	1	Plate, IDENTIFICATION		
88	24813500.88	4	Screw [NP]		

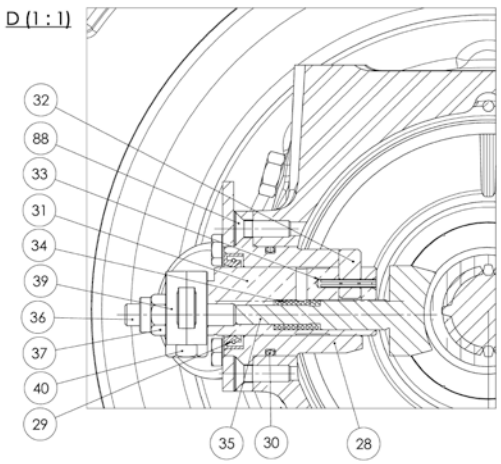

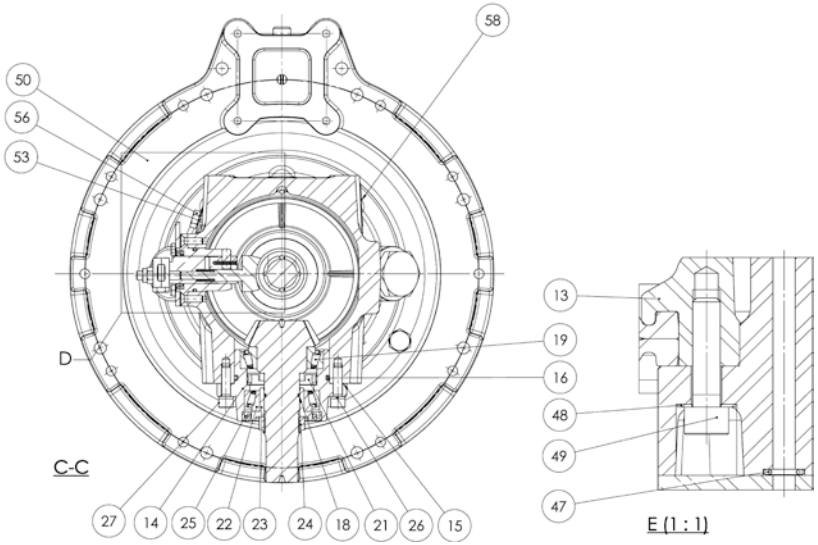

[NP] Not provided

D_5037_6			Sheet 1/4 SP60 S.Drive V2		
FIG.	REF.	QTY	DESCR.	FROM	UPTO
1	24813500.38	1	Bracket Control	27/09/2016	
2	24813500.95	1	Bracket [NP]	27/09/2016	
3	24813500.59	1	Body	27/09/2016	
4	24813500.13.1	1	Body	27/09/2016	
5	24813500.14	1	Body	27/09/2016	
7	24813500.104.1	1	Body	27/09/2016	
17	24813500.94	1	Spacer	27/09/2016	
25	24813500.73	1	Propeller Shaft	27/09/2016	
28	24813500.78	1	Body	27/09/2016	
31	24813500.96	1	Flexible	27/09/2016	
34	24810424	1	Lever	27/09/2016	
38	24813500.50	1	Flange CLOSING MEMBRANE	27/09/2016	
40	24813500.116	1	Zinc Anode	27/09/2016	
41	24810065	1	Plug	27/09/2016	
54	24813500.123	1	Screw	27/09/2016	
74	24810063	2	Plane Washer	27/09/2016	
77	24813500.126	8	Washer	27/09/2016	
79	24820075	6	Washer GROWER DIN 127-10 [NP]	27/09/2016	
80	24850093	12	Washer	27/09/2016	
82	24813500.26	6	Washer	27/09/2016	
88	24830106	12	Bolt DIN 933 M8-30 8.8 [NP]	27/09/2016	
89	24860047	6	Bolt DIN 912 M8-30 8.8 [NP]	27/09/2016	
90	24820076	6	Bolt DIN 933 M10-30 8.8 [NP]	27/09/2016	

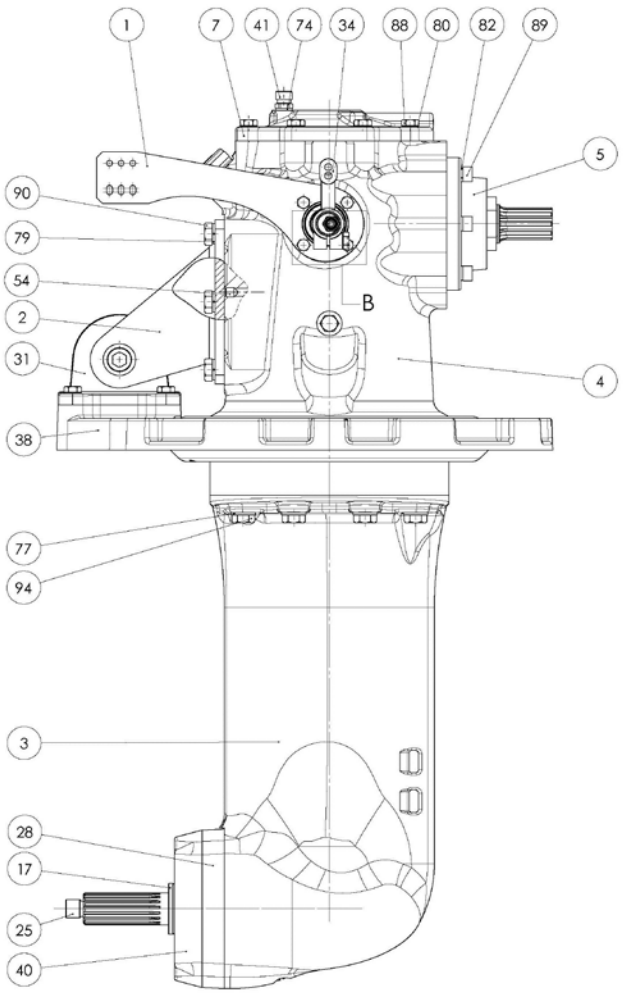

[NP] Not provided

D_5037_7			Sheet 2/4 SP60 S.Drive V2		
FIG.	REF.	QTY	DESCR.	FROM	UPTO
6	24813500.28	1	Body Control	27/09/2016	
104	24813500.131	1	Nut	27/09/2016	
29	24813500.45	1	Cover	27/09/2016	
50	24813500.121	1	Gauge Oil Level	27/09/2016	
56	24813500.124	1	Plug	27/09/2016	
58	24850011	1	Plug,oil drain	27/09/2016	
59	24813500.93	1	Plug	27/09/2016	
75	24830035	1	Washer	27/09/2016	
76	24810522	1	Washer	27/09/2016	
87	24810047	1	Bolt DIN 933 M8-25 8.8 [NP]	27/09/2016	
94	24813500.72	8	Screw	27/09/2016	

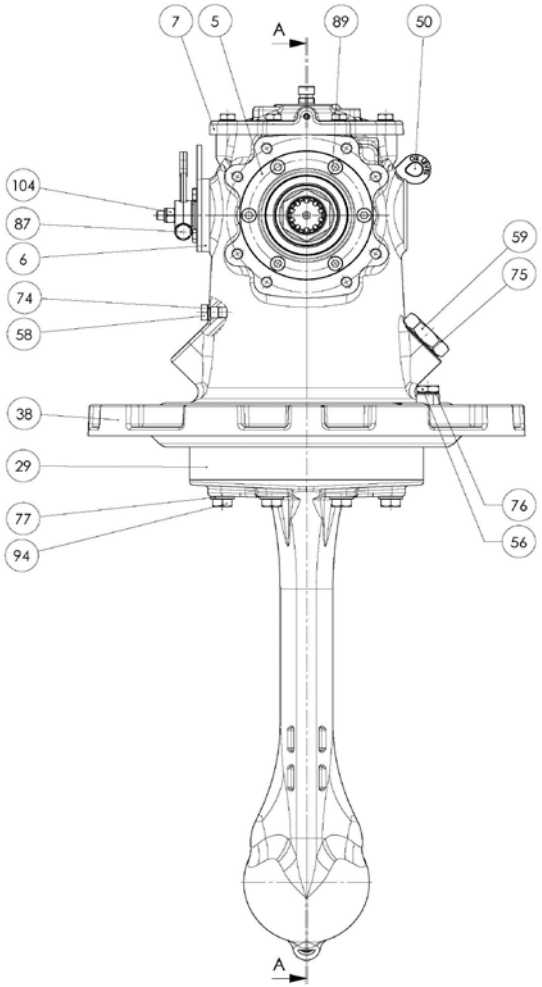

[NP] Not provided

	D_5037_8		Sheet 3/4 SP60 S.Drive V2		
FIG.	REF.	QTY	DESCR.	FROM	UPTO
8	24813500.42	1	Gasket	27/09/2016	
9	24813500.41	1	Gasket	27/09/2016	
10	24810333	6	Spacer	27/09/2016	
100	24813500.10	2	Bearing	27/09/2016	
101	24850104	2	Conical Roller Bearing 32009-X	27/09/2016	
102	24813500.77	2	HELICOil	27/09/2016	
103	24813500.130	3	Helicoil	27/09/2016	
11	24813500.67	2	Spacer	27/09/2016	
12	24850108	2	Shim Adjusting	27/09/2016	
13	24813500.15	2	Spacer	27/09/2016	
14	24813500.113	2	Spacer	27/09/2016	
15	24813500.81	3	Spacer	27/09/2016	
16	24813500.85	1	Spacer	27/09/2016	
18	24860217	2	Spacer	27/09/2016	
20	24813500.12	1	Spring	27/09/2016	
22	24813500.114	1	Shaft, Output	27/09/2016	
23	24813500.17	1	Shaft	27/09/2016	
24	24813500.60	1	Shaft	27/09/2016	
27	24860006	1	ATF Oil Plate	27/09/2016	
30	24813500.23	1	Cover	27/09/2016	
32	24813500.115	2	Bearing Support	27/09/2016	
35	24813500.61	1	Ring	27/09/2016	
36	24813500.09	2	Nut	27/09/2016	
37	24813500.24	1	Nut	27/09/2016	
39	24813500.76	1	Bushing	27/09/2016	
42	24813500.87	1	Plug,oil drain	27/09/2016	
44	24813500.21	1	Impeller	27/09/2016	
45	24813500.02	1	Cone Clutch	27/09/2016	
46	24813500.117	2	Gear	27/09/2016	
47	24813500.118	1	Gear	27/09/2016	
48	24813500.119	1	Pinion	27/09/2016	
49	24813500.120	1	Shaft Coupling	27/09/2016	
51	24813500.122	2	Washer	27/09/2016	
52	24813500.70	1	Nut	27/09/2016	
55	24813500.05	2	Ring,Bearing	27/09/2016	

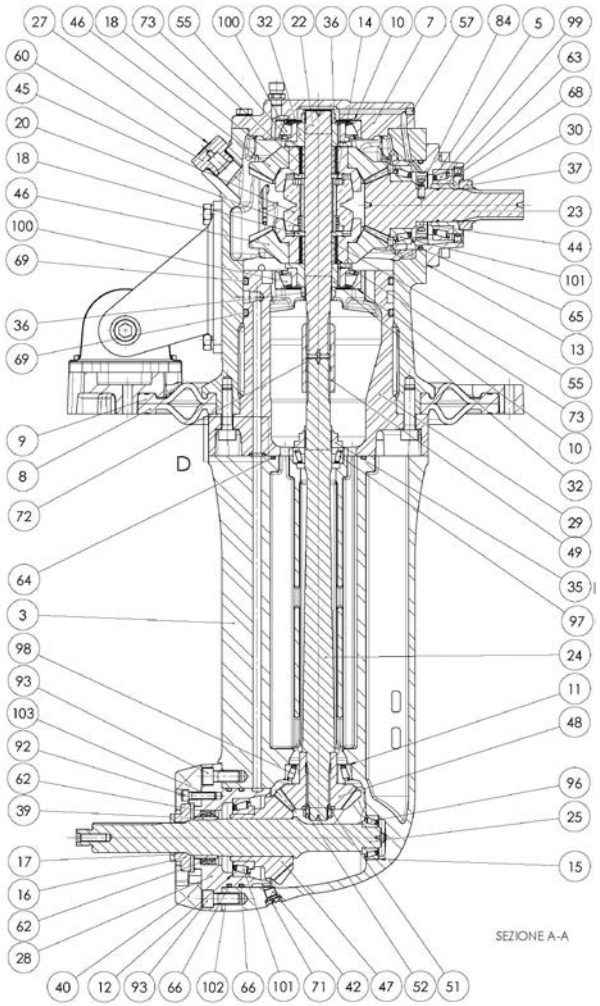

D_5037_8			Sheet 3/4 SP60 S.Drive V2		
FIG.	REF.	QTY	DESCR.	FROM	UPTO
57	24810326	1	Plug	27/09/2016	
60	24813500.125	1	Plug	27/09/2016	
62	24813500.79	2	Oil Seal	27/09/2016	
63	24813500.25	1	Oil Seal	27/09/2016	
64	24813500.65	1	O-Ring	27/09/2016	
65	24813500.16	1	O-Ring	27/09/2016	
66	24813500.80	2	O-Ring D. 90X3,5	27/09/2016	
68	24813500.18	1	O-Ring	27/09/2016	
69	24813500.46	2	O-Ring	27/09/2016	
71	24813500.86.1	1	O-Ring	27/09/2016	
72	24813500.64	1	CIRClip	27/09/2016	
73	24813500.06	4	Bearing, needle	27/09/2016	
84	24813500.128	1	Pin	27/09/2016	
92	24813500.91	3	Screw	27/09/2016	
93	24813500.83	2	Screw	27/09/2016	
96	24813500.82	1	Bearing	27/09/2016	
97	24860206	1	Conical Roller Bearing 32005	27/09/2016	
98	24813500.66	1	Bearing	27/09/2016	
99	24813500.22	1	Bearing	27/09/2016	

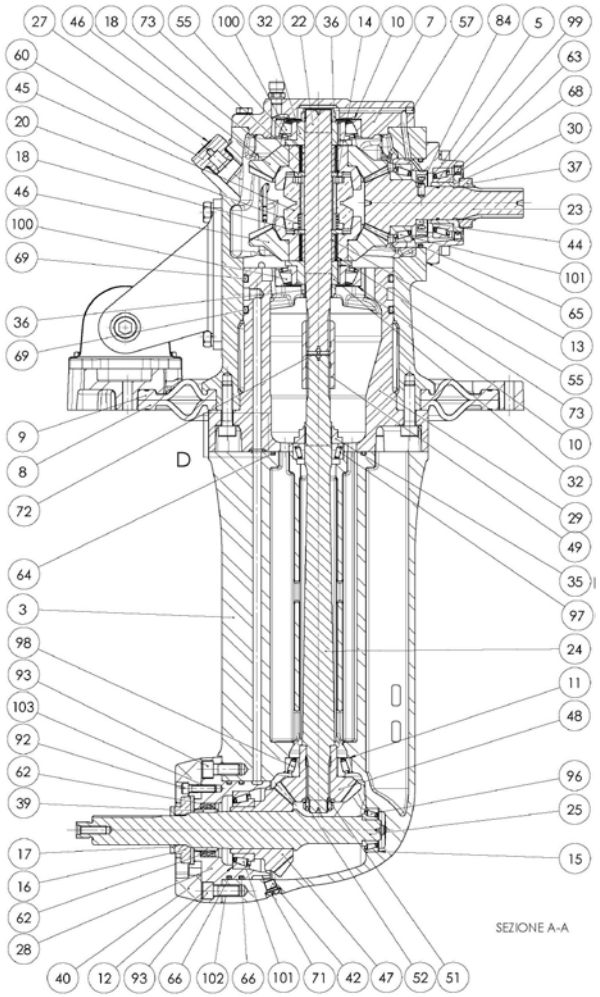

D_5037_9			Sheet 4/4 SP60 S.Drive V2		
FIG.	REF.	QTY	DESCR.	FROM	UPTO
105	24813500.99	1	Nut [NP]	27/09/2016	
19	24860411	1	Spring	27/09/2016	
21	24860402	1	Shaft	27/09/2016	
26	24850005	1	Plate, IDENTIFICATION	27/09/2016	
33	24860419	1	Pin	27/09/2016	
43	24860423	1	PAD	27/09/2016	
53	24860409	1	Screw	27/09/2016	
61	24860404	1	Oil Seal	27/09/2016	
67	24860417	1	O-Ring	27/09/2016	
70	24813500.47	1	O-Ring	27/09/2016	
78	24813500.97	2	Washer DIN 125-14 [NP]	27/09/2016	
81	24813500.127	8	Washer	27/09/2016	
83	24860418	1	Pin DIN 1481 3-20 [NP]	27/09/2016	
85	24813500.89	4	Bolt DIN 933 M6-10 8.8 [NP]	27/09/2016	
86	24813500.129	4	Screw	27/09/2016	
91	24813500.98	1	Bolt	27/09/2016	
95	24813500.49	8	Screw	27/09/2016	

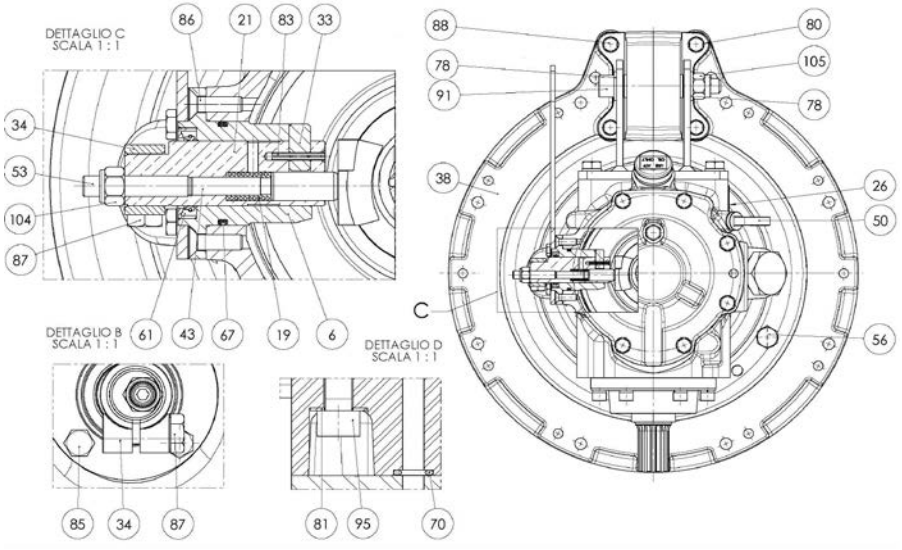

[NP] Not provided

	D_5037_5		Maintenance Kit		
FIG.	REF.	QTY	DESCR.	FROM	UPTO
1	24813401	1	Kit Gasket		
2	A0201000	3	ATF Sole Diesel Oil 1L		
NS	24813500.84	1	Anode SP60 [NS]		

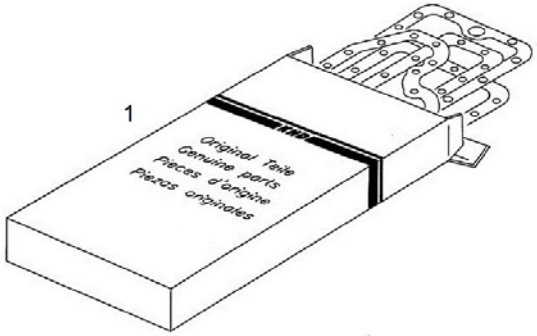

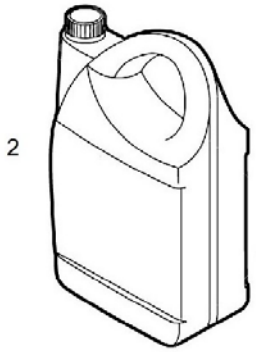

[NS] Not shown

Gearbox TMC-60P

	D_5036_1		Sheet 1/2		
FIG.	**REF.**	**QTY**	**DESCR.**	**FROM**	**UPTO**
2	24880401	1	Cover		
8	24880306	1	Washer		
9	24860411	1	Spring		
10	24880402	1	Shaft		
14	24850005	1	Plate, IDENTIFICATION		
15	24860006	1	ATF Oil Plate		
16	24860419	1	Pin		
17	24810424	1	Lever		
21	24880311	1	Plug		
22	24880038	2	Plug		
23	24880423	1	Pad		
29	24860008P	1	Gauge		
31	24880409	1	Screw		
33	24850011	1	Plug,oil drain		
36	24860404	1	Oil Seal		
39	24860417	1	O-Ring		
44	24810530	2	Washer DIN 125-8 [NP]		
46	24810014	3	Washer GROWER DIN 127-8 [NP]		
49	24860418	1	Pin DIN 1481 3-20 [NP]		
51	24810047	8	Bolt DIN 933 M8-25 8.8 [NP]		
52	52103258	2	Bolt DIN 912 M8-25 8.8		
53	52101263	2	Bolt DIN 931 M8-50 8.8		
54	24860071	2	STUD		
57	24810515	2	Nut DIN 934 M8 8.8 [NP]		
59	51123008	1	Nut DIN 985 M8 5.6		

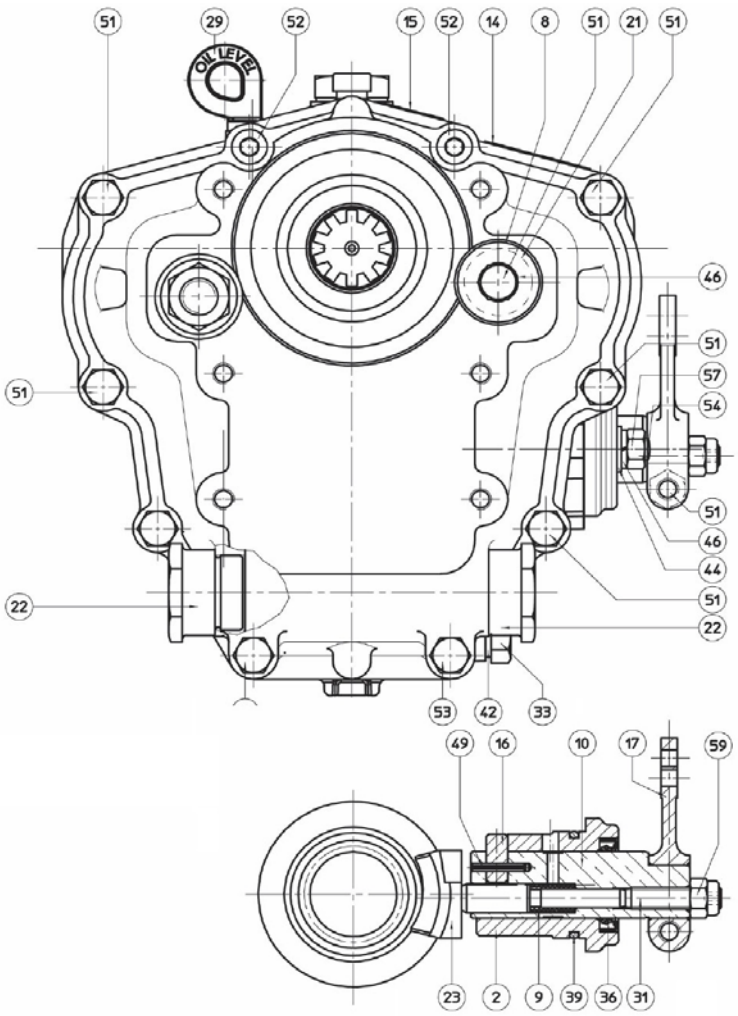

[NP] Not provided

Gearbox TMC-60P

	D_5036_2		Sheet 2/2		
FIG.	**REF.**	**QTY**	**DESCR.**	**FROM**	**UPTO**
1	24880002P	1	Box		
3	24880001	1	Cover		
4	24880305	2	Spacer		
5	24813500.67	6	Spacer		
6	24880218	2	Shim		
7	24880217	2	Shim		
11	24880301	1	INTERMEDIATE Shaft		
12	24880201	1	Shaft Output		
13A	24882101P	1	Input Shaft		
13B	24883101P	1	Input Shaft		
13C	24884101	1	Input Shaft		
13D	24885101P	1	Input Shaft		
18	24850099	1	Nut		
19	24880222	1	Nut		
20	24810065	1	Plug		
24	24880202	1	Clutch		
25A	24882203	1	Gear		
25B	24882203	1	Gear		
25C	24884203	1	Gear		
25D	24884203	1	Gear		
26A	24882203	1	Gear		
26B	24883210	1	Gear		
26C	24884210	1	Gear		
26D	24885210	1	Gear		
27	24880302	1	Gear		
28	24880224	1	Flange Output		
30	24880310	1	Nut		
32	24880205	2	CAGE		
34	24830011	1	Plug		
35	24880309	1	Ring		
37	24880103A	1	Seal,oil BA 30-47-7 [NP]		
38	24890214	1	Oil Seal		
40	24880204	2	Bearing, needle		
41	24880308	1	Washer		
42	24810063	2	Plane Washer		

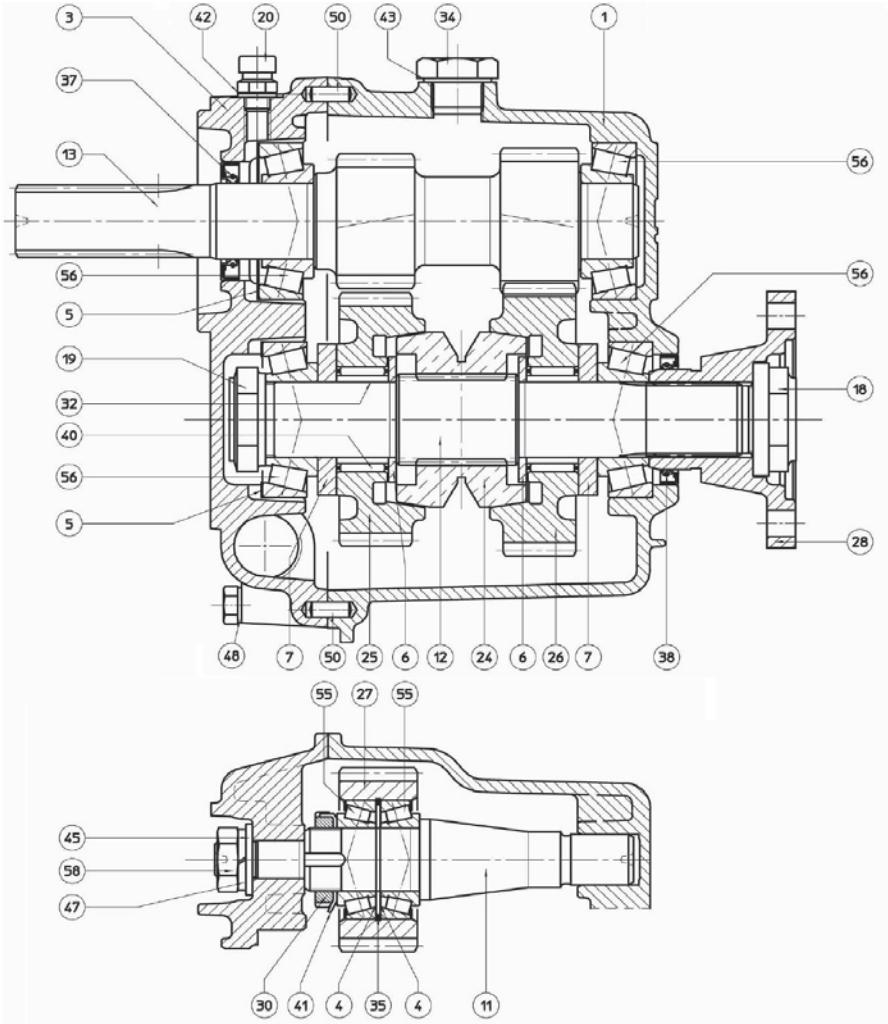

[NP] Not provided

Gearbox TMC-60P

	D_5036_2		Sheet 2/2		
FIG.	**REF.**	**QTY**	**DESCR.**	**FROM**	**UPTO**
43	56000083	1	Washer 21-26-1,5		
45	24813500.97	1	Washer DIN 125-14 [NP]		
47	24810221	1	Washer GROWER DIN 127-14 [NP]		
48	24850093	10	Washer		
50	24860023	2	Pin		
55	24860206	2	Conical Roller Bearing 32005		
56	25710104	4	Conical Roller Bearing 32206-J2/Q		
58	24880307	1	Nut		

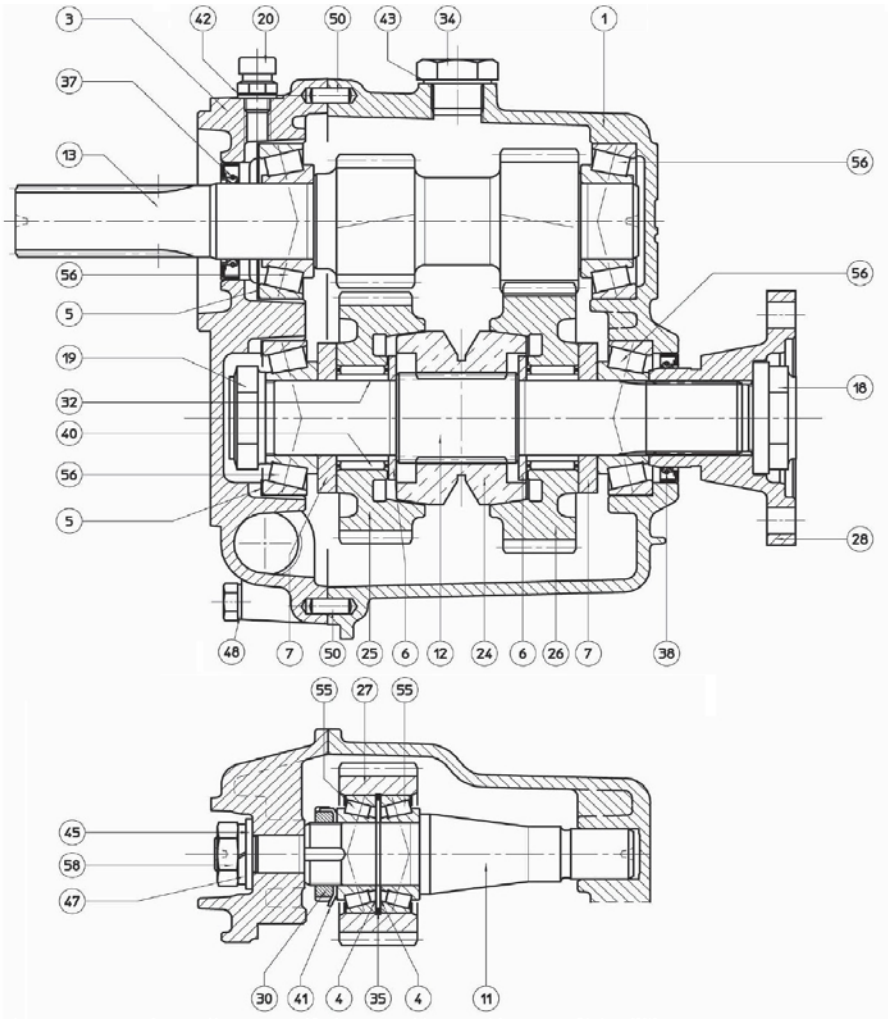

Gearbox TMC-60P

	D_5035_3		Kit de Service		
FIG.	**REF.**	**QTY**	**DESCR.**	**FROM**	**UPTO**
1	24883401	1	Gasket Kit		
2	A0201000	2	ATF Sole Diesel Oil 1L		

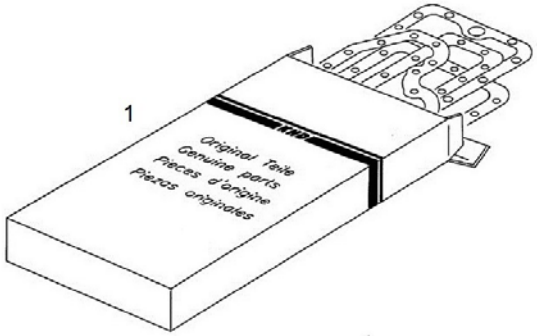

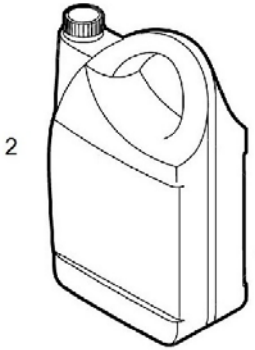

Gearbox TMC-60A

	D_5034_1		Sheet 1/2		
FIG.	REF.	QTY	DESCR.	FROM	UPTO
1	24880002A	1	Box		
3	24880001A	1	Cover		
4	24880305	2	Spacer		
5	24813500.67	6	Spacer		
6	24880218	2	Shim		
7	24880217	2	Shim		
10	24880301	1	INTERMEDIATE Shaft		
11	24880201	1	Shaft Output		
12A	24884101	1	Input Shaft		
12B	24883101A	1	Input Shaft		
17	24850099	1	Nut		
18	24880222	1	Nut		
21	24880202	1	Clutch		
22	24880302	1	Gear		
23A	24884210A	1	Gear		
23B	24883210A	1	Gear		
24	24883203A	1	Gear [NP]		
25	24880224	1	Flange Output		
27	24880310	1	Nut		
29	24880205	2	CAGE		
31	24830011	1	Plug		
32	24880309	1	Ring		
34	22210103	1	Seal,oil BA 30-47-7		
35	25210214	1	Seal,oil 40-52-7		
37	24880204	2	Bearing, needle		
38	24880308	1	Washer		
40	56000083	1	Washer 21-26-1,5		
42	51030014	1	Washer DIN 125-14		
44	53033014	1	Washer GROWER DIN 127-14		
45	24850093	10	Washer		
47	24860023	2	Pin		
52	24860206	2	Conical Roller Bearing 32005		
53	25710104	4	Conical Roller Bearing 32206-J2/Q		
55	24880307	1	Nut		

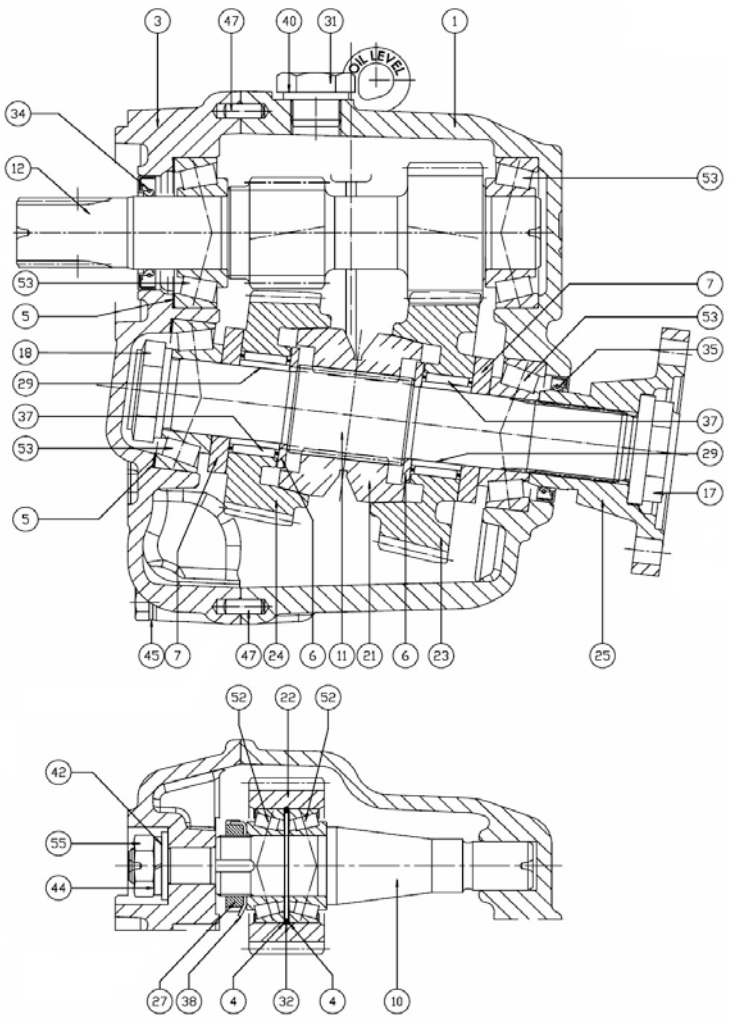

[NP] Not provided

Gearbox TMC-60A

	D_5034_2		Sheet 2/2		
FIG.	**REF.**	**QTY**	**DESCR.**	**FROM**	**UPTO**
2	24880401	1	Cover		
8	24860411	1	Spring		
9	24880402	1	Shaft		
13	24850005	1	Plate, IDENTIFICATION		
14	24860006	1	ATF Oil Plate		
15	24860419	1	Pin		
16	24810424	1	Lever		
19	24810065	1	Plug		
20	24880423	1	Pad		
26	24860008P	1	Gauge		
28	24880409	1	Screw		
30	24850011	1	Plug,oil drain		
33	24860404	1	Oil Seal		
36	24860417	1	O-Ring		
39	24810063	2	Plane Washer		
41	51030008	2	Washer DIN 125-8		
43	53033008	2	Washer GROWER DIN 127-8		
46	53052210	1	Pin DIN 1481 3-20		
48	52102258	7	Bolt DIN 933 M8-25 8.8		
49	52103258	2	Bolt DIN 912 M8-25 8.8		
50	52101263	2	Bolt DIN 931 M8-50 8.8		
51	24860071	2	STUD		
54	52120008	2	Nut DIN 934 M8 8.8		
56	51123008	1	Nut DIN 985 M8 5.6		

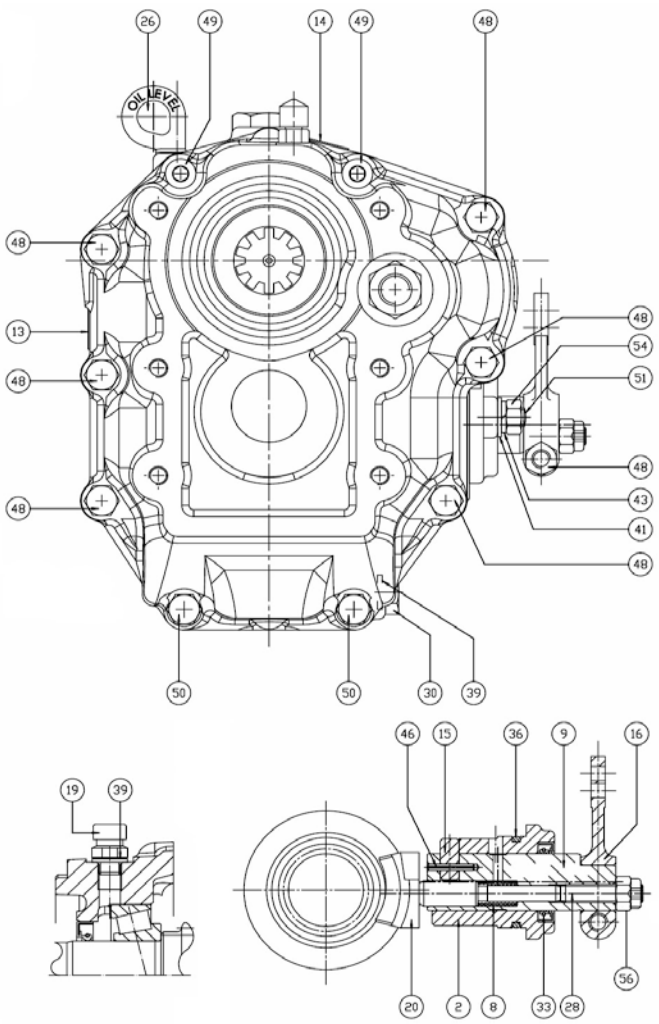

Gearbox TMC-60A

	D_5035_3		Kit de Service		
FIG.	**REF.**	**QTY**	**DESCR.**	**FROM**	**UPTO**
1	24883401	1	Gasket Kit		
2	A0201000	2	ATF Sole Diesel Oil 1L		

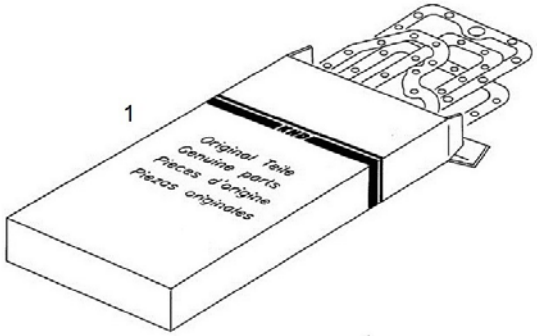

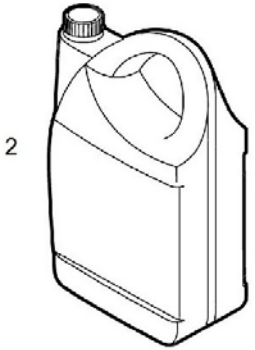

GearBox ZF-15 MIV

	D_50Z2_1		Sheet 1/2		
FIG.	**REF.**	**QTY**	**DESCR.**	**FROM**	**UPTO**
1	24610030	1	Housing Assy		
2	24610031	1	Cover		
3	24610032	1	Cover		
4	24610033	37	Spring Washer		
5	24610034	8	Hex Screw		
6A	24610401	1	Actuating Lever		
6B	24610402	1	Actuating Lever		
7A	24610403	1	Hex Head Screw		
7B	24610404	1	Cap Screw M8X40		
7C	24610405	1	Screw (Actuating Lever)		
8	24610406	1	Shaft Seal Ring		
9	24610407	1	Cover		
10	24610408	1	Dowel Pin		
11	24610409	1	Actuating Cam Assembly		
12	24610400	1	Shift Cover Assembly		
15	24610411	1	Shift Fork		
16	24610035	1	Shift Rod		
17	24610036	1	Plug		
18	24610037	1	Sealing Ring		
19	24610038	1	Dipstick		
20	24610039	1	Oil Drain Plug		
21	24610040	14	Hex Screw		
22	24610041	16	Hex Nut		
23	24610042	1	Plug		
24	24610301	1	Intermediate Shaft		
25	24610302	2	Disc		
26	24610303	1	Intermediate Gear		
27	24610304	1	Needle Bearing		
28	24610043	2	Gasket		
29	24610412	1	Gasket (or Loctite 518)		
87	24610410	2	Needle Bearing		
88	24610044	4	Stud		
89	24610045	4	Plug		
90	24610046	1	Name Plate		
91	24610047	1	Oil Name Plate		

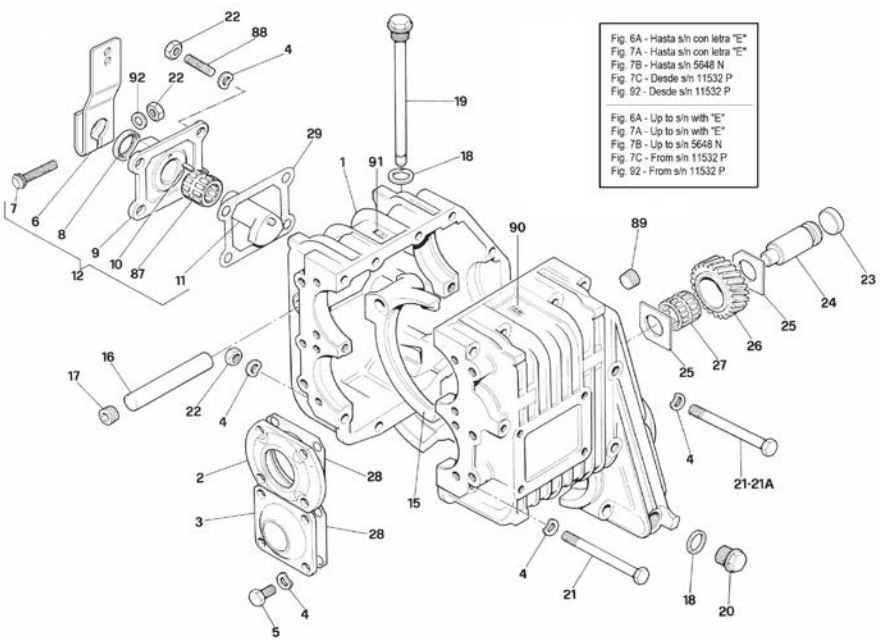

	D_50Z2_1		Sheet 1/2		
FIG.	**REF.**	**QTY**	**DESCR.**	**FROM**	**UPTO**
92	24610413	1	Washer		

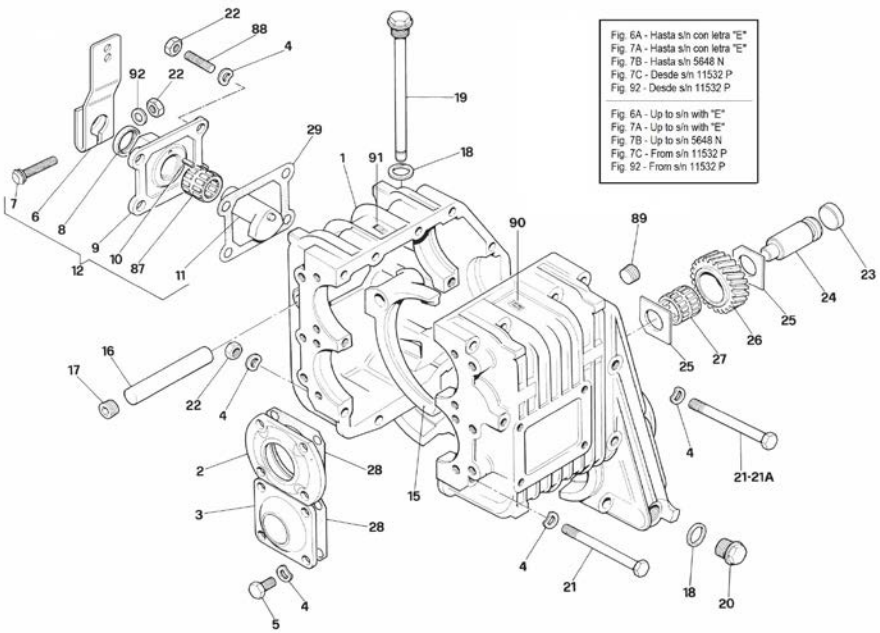

GearBox ZF-15 MIV

	D_50Z2_2		Sheet 2/2		
FIG.	**REF.**	**QTY**	**DESCR.**	**FROM**	**UPTO**
30	24613430	1	----------		
31	24613431	2	----------		
32	24610102	2	Tapered Roller Bearing		
34	24610305	1	Tapered Roller Bearing		
36A	24610103	1	Input Shaft Hbw 150 V 1.8R Z1/Z3=27/22		
36B	24610104	1	Input Shaft Zf 15 Miv 2.13R Z1/Z3=24/22		
36C	24610105	1	Input Shaft Zf 15 Miv 2.72R Z1/Z3=18/22		
36D	24610106	1	Input Shaft Zf 15 Miv 2.99R Z1/Z3=19/22		
37	24610107	2	Shim 0.10 mm		
38A	24610108	2	Shim 0.15 mm		
38B	24610109	2	Shim 0.20 mm		
38C	24610110	2	Shim 0.30 mm		
39	24610111	2	Shim 0.50 mm		
40	24610112	2	Shim 1.00 mm		
41	24610307	1	Hex Head Screw		
42	24610308	1	Spacer		
43	24610309	2	Thrust Ring		
44A	24610310	1	Gear Hbw 150 V - 1.8R «08» Z2=42		
44B	24610311	1	Gear Zf 15 Miv - 2.13R «001» Z2=45		
44C	24610312	1	Gear Zf 15 Miv - 2.72R «003» Z2=43		
44D	24610313	1	Gear Zf 15 Miv - 2.99R «002» Z2=50		
45	24610314	2	Needle Bearing		
46	24610315	2	Needle Bearing		
47	24610316	2	Spacer		
48	24610317	4	Spring		
49	24610318	2	Disc		
50	24610319	4	Ring Half		
51	24610320	8	Internal Clutch Disc		
52	24610321	8	External Clutch Disc		
53A	24610322	2	Shim 0.3 mm		
53B	24610323	2	Shim 0.4 mm		
54	24610324	2	Shim 0.5 mm		
55	24610325	2	Shim 0.6 mm		
56	24610326	2	Shim 0.7 mm		
57	24610327	2	Disc Carrier		

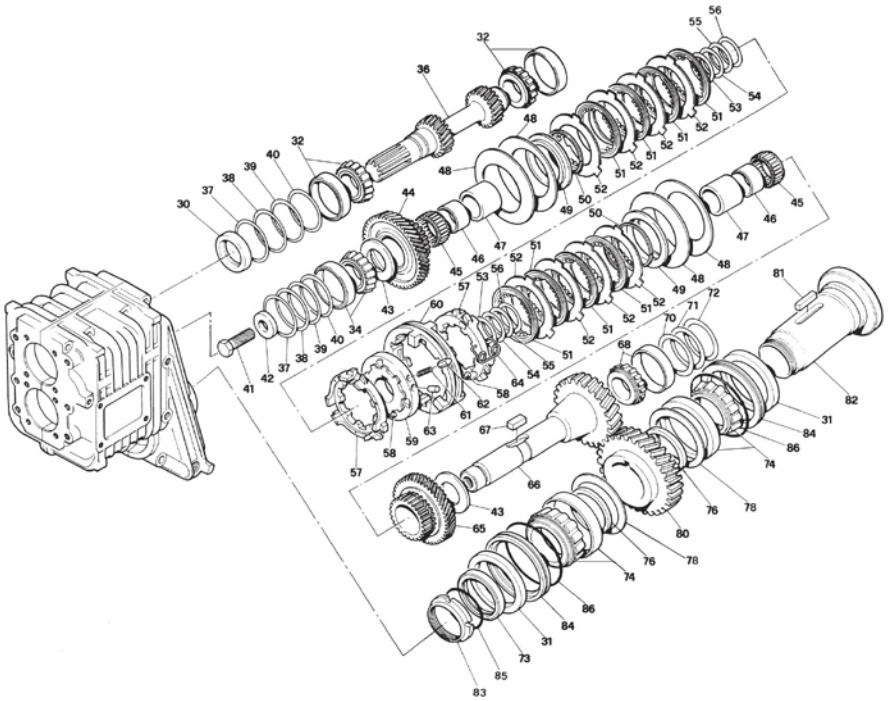

GearBox ZF-15 MIV

	D_50Z2_2		Sheet 2/2		
FIG.	**REF.**	**QTY**	**DESCR.**	**FROM**	**UPTO**
58	24610328	6	Ball		
59	24610329	1	Guide Sleeve		
60	24610330	1	Change Selector		
61	24610331	3	Pressure Spring		
62	24610332	3	Stop Pin		
63	24610333	3	Guide Pin		
64	24610334	3	Torsion Spring		
65	24610335	1	Gear Z5=43		
66	24610336	1	Intermediate Shaft Z6=29		
67	24610337	2	Cotter		
68	24610338	1	Tapered Roller Bearing		
70	24610339	2	Shim 0.1 mm		
71	24610340	1	Shim 0.3 mm		
72	24610341	1	Shim 0.5 mm		
73	24610202	1	Ring		
74	24610203	2	Tapered Roller Bearing		
76	24610204	2	Spacer Ring		
78A	24610205	2	Shim 1.1 mm		
78B	24610206	2	Shim 1.2 mm		
78C	24610207	2	Shim 1.3 mm		
78D	24610208	2	Shim 1.4 mm		
78E	24610209	2	Shim 1.5 mm		
78F	24610210	2	Shim 1.6 mm		
78G	24610211	2	Shim 1.7 mm		
78H	24610212	2	Shim 1.8 mm		
78I	24610213	2	Shim 1.9 mm		
78J	24610214	2	Shim 2.0 mm		
78K	24610215	2	Shim 2.1 mm		
78L	24610216	2	Shim 2.2 mm		
78M	24610217	2	Shim 2.3 mm		
78N	24610218	2	Shim 2.4 mm		
80	24610219	1	Gear Z=33		
81	24610220	1	Key		
82	24610221	1	Output Shaft		
83	24610222	1	Ring Nut		
84	24610223	2	Ring		
85	24610224	1	O-Ring		
####	24610225	2	O-Ring		

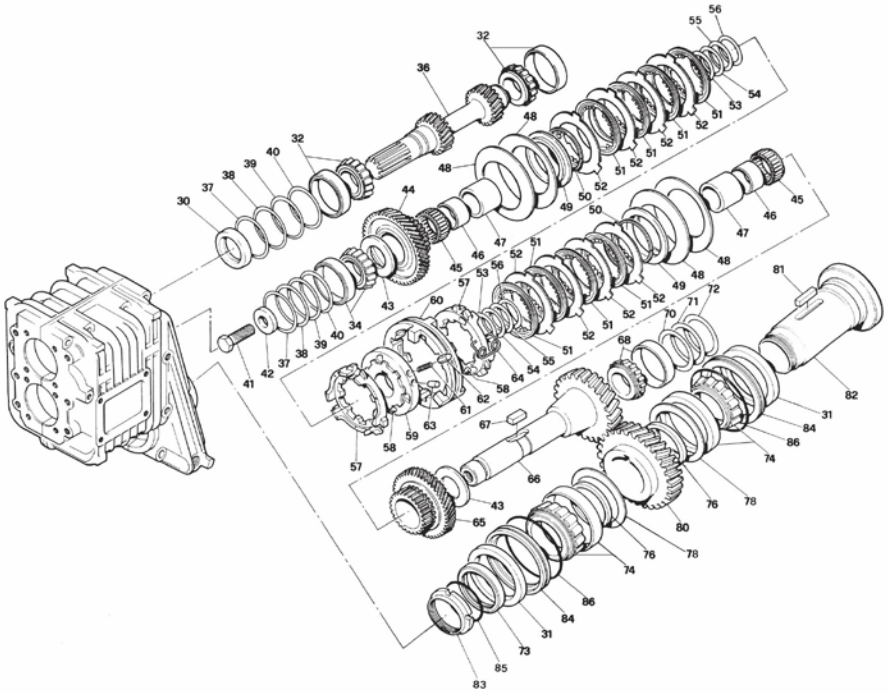

Elements Supports

	13810067		Motor Bracket, Width 180		
FIG.	**REF.**	**QTY**	**DESCR.**	**FROM**	**UPTO**
1	13810067.1	1	Bracket, Front Left (Width 180)		
2	13810067.2	1	Bracket, Front Right (Width 180)		
3	13810063.3	2	Bracket, Rear (Width 180)		

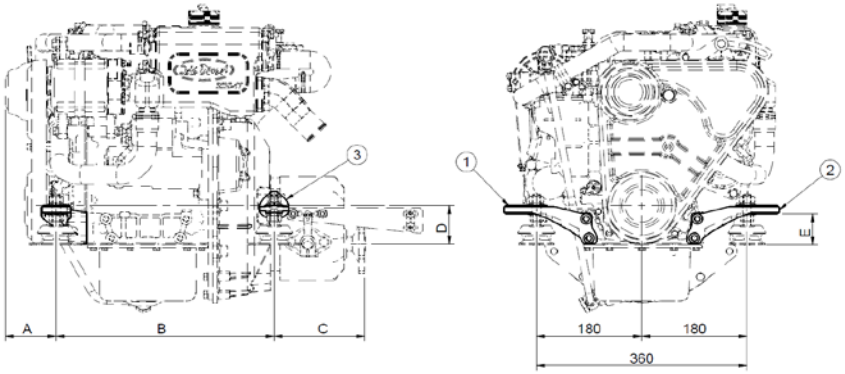

Elements Supports

	13810068		Motor Bracket, Width 185		
FIG.	**REF.**	**QTY**	**DESCR.**	**FROM**	**UPTO**
1	13810068.1	1	Bracket, Front Left (Width 185-187)		
2	13810068.2	1	Bracket, Front Right (Width 185-187)		
3	13810037E	2	Support Rear		

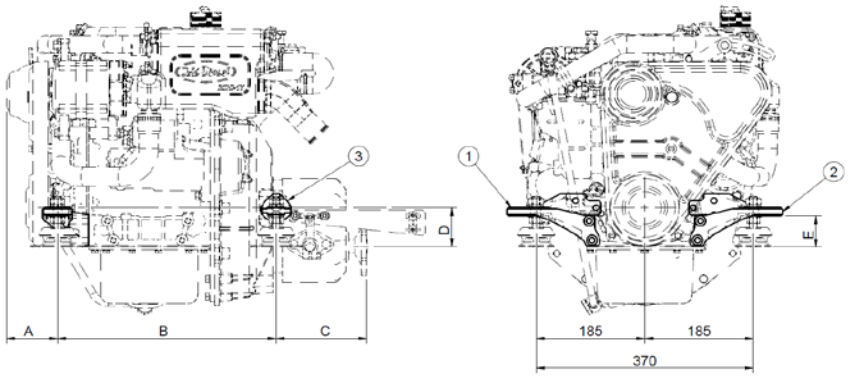

Elements Supports

	13810069		Motor Bracket, Width 205		
FIG.	**REF.**	**QTY**	**DESCR.**	**FROM**	**UPTO**
1	13810069.1	1	Bracket, Front Left (Width 205)		
2	13810069.2	1	Bracket, Front Right (Width 205)		
3	13810069.3	2	Bracket, Rear (Width 205)		

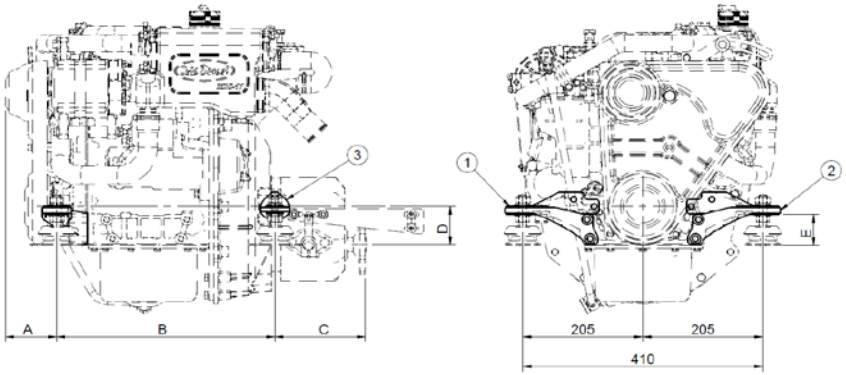

Motor Supports

13810048			Kit Replace MINI-17/29 v6 Supports to v5		
FIG.	REF.	QTY	DESCR.	FROM	UPTO
1	13810001.1	1	Bracket Front, Left	08/07/2014	
3	52203308	4	Bolt DIN 912 M10-1,25-25 12.9		
4	13810002.1	1	RIGHT, front bracket	08/07/2014	

IMAGEN DISPONIBLE PRÓXIMAMENTE
IMAGE AVAILABLE COMING SOON

Kit Gearbox

	13810007.6		Kit GearBox RONIM-5		
FIG.	REF.	QTY	DESCR.	FROM	UPTO
1	13822027.4.1	1	Flywheel		
2	13810049	1	Flywheel Supplement		
3	13810046	1	Flexible Coupling Type A SAE 6,5		
4	53033008	12	Washer GROWER DIN 127-8		
5	52102259	6	Bolt DIN 933 M8-30 8.8		
6	52103257	2	Bolt DIN 912 M8-20 8.8		
7	13114004	1	Cover		
8	13114002	1	Gasket		
9	53033012	1	Washer GROWER DIN 127-12		
10	53203358	1	Bolt DIN 912 M12-1,25-25 12.9		
11	13810037	2	Support REAR		
12	53033010	6	Washer GROWER DIN 127-10		
13	52102309	6	Bolt DIN 933 M10-30 8.8		
14	53203357	3	Bolt DIN 912 M12-1,25-20 12.9		
15	53038012	3	Washer DIN 6798-A 12		
16	52102257	4	Bolt DIN 933 M8-20 8.8		
17	57000361	2	Washer 10-14-1,5		
18	13814072	2	NIPPLE EYE		
19	52102154	2	Bolt DIN 933 M6-10 8.8		
20	51030006	2	Washer DIN 125-6		
21	13814070	1	Electric Fuel Feed Pump 12V		
22	13814024	1	Bracket		
23	13814012	1	Pipe		
24	51086015	1	One Ear Clamp With Interior Ring		
NS	58088283	1	Pastic Cable Zip Tie [NS]		
NS	60900126	1	TERMINAL [NS]		

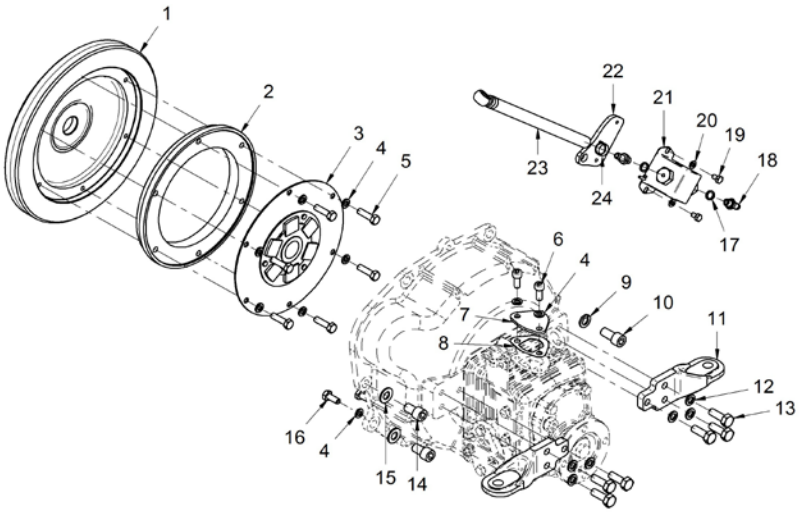

[NS] Not shown

Kit Gearbox

13810100.6			Kit S-Drive VOLVO 120SB/120SC/120SE		
FIG.	REF.	QTY	DESCR.	FROM	UPTO
1	52102156	6	Bolt DIN 933 M6-16 8.8		
2	53033006	6	Washer GROWER DIN 127-6		
3	13810042	1	Flexible Coupling Type F D. 175 VULKAN		
4	17610022	1	Flywheel Supplement		
5	53033008	10	Washer GROWER DIN 127-8		
6	52102257	10	Bolt DIN 933 M8-20 8.8		
7	17610014	1	Engine Adaptor		
8	51030010	6	Washer DIN 125-10		
9	52101311	6	Bolt DIN 931 M10-40 8.8		
10	53203357	4	Bolt DIN 912 M12-1,25-20 12.9		
11	53038012	4	Washer DIN 6798-A 12		
12	13814070	1	Electric Fuel Feed Pump 12V		
13	13814072	2	NIPPLE EYE		
14	57000361	2	Washer 10-14-1,5		
15	51030006	2	Washer DIN 125-6		
16	52102154	2	Bolt DIN 933 M6-10 8.8		
17	51086015	1	One Ear Clamp With Interior Ring		
18	13814017.5	1	Fuel Pump Hose		
NS	58088283	1	Pastic Cable Zip Tie [NS]		
NS	60900126	1	TERMINAL [NS]		

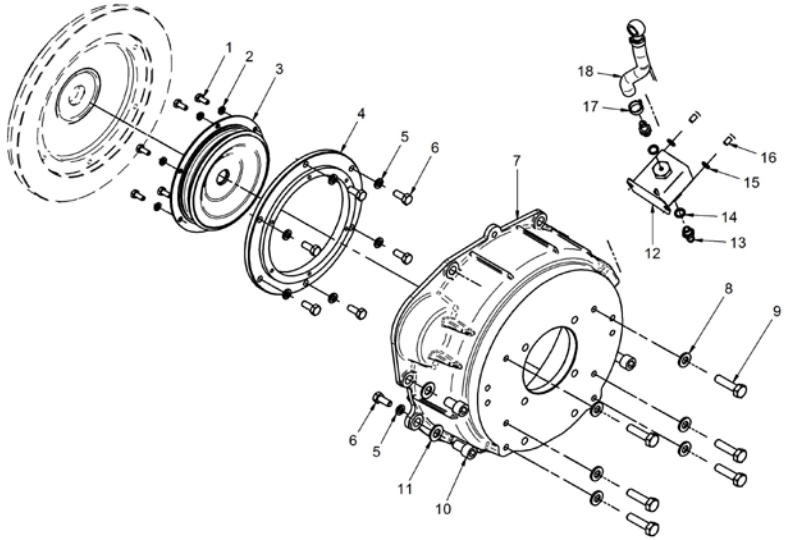

[NS] Not shown

Kit Gearbox

13810101.6			Kit S-Drive VOLVO 120S		
FIG.	REF.	QTY	DESCR.	FROM	UPTO
1	13810051	1	Flywheel Supplement		
2	53033008	10	Washer GROWER DIN 127-8		
3	52101263	6	Bolt DIN 931 M8-50 8.8		
4	13810042	1	Flexible Coupling Type F D. 175 VULKAN		
5	53033006	6	Washer GROWER DIN 127-6		
6	52102156	6	Bolt DIN 933 M6-16 8.8		
7	52101316	6	Bolt DIN 931 M10-65 8.8		
8	53038010	6	Washer DIN 6798-A 10		
9	17610014	1	Engine Adaptor		
10	13910016.1	1	Spacer, VOLVO Stern Drive 110S		
11	52120010	6	Nut DIN 934 M10 8.8		
12	53203357	4	Bolt DIN 912 M12-1,25-20 12.9		
13	53038012	4	Washer DIN 6798-A 12		
14	52102257	4	Bolt DIN 933 M8-20 8.8		
15	13814070	1	Electric Fuel Feed Pump 12V		
16	13814072	2	NIPPLE EYE		
17	57000361	2	Washer 10-14-1,5		
18	51030006	2	Washer DIN 125-6		
19	52102154	2	Bolt DIN 933 M6-10 8.8		
20	51086015	1	One Ear Clamp With Interior Ring		
21	13814017.5	1	Fuel Pump Hose		
NS	58088283	1	Pastic Cable Zip Tie [NS]		
NS	60900126	1	TERMINAL [NS]		

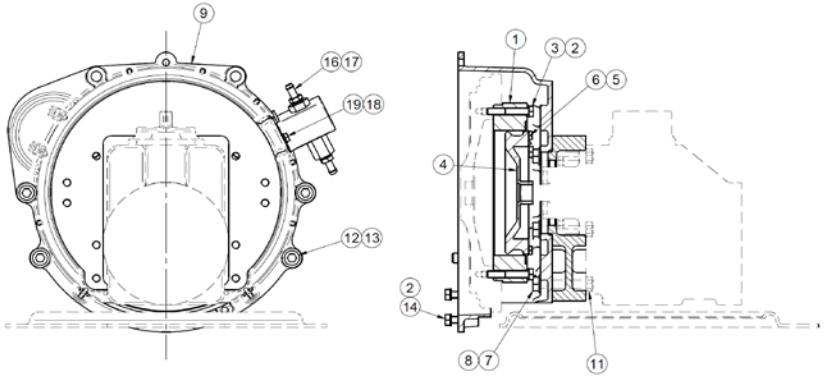

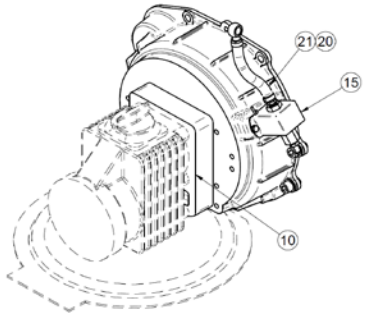

[NS] Not shown

Kit Gearbox

	13810102.6		Kit S-Drive VOLVO 100S		
FIG.	REF.	QTY	DESCR.	FROM	UPTO
1	13810018.4	1	Shaft (Cardan 100S)		
2	53033008	10	Washer GROWER DIN 127-8		
3	52102258	6	Bolt DIN 933 M8-25 8.8		
4	17610015	1	Engine Adaptor		
5	53038012	3	Washer DIN 6798-A 12		
6	53203357	3	Bolt DIN 912 M12-1,25-20 12.9		
7	13810037.1	2	Support REAR		
8	52103309	4	Bolt DIN 912 M10-30 8.8		
9	53033010	4	Washer GROWER DIN 127-10		
10	52102257	4	Bolt DIN 933 M8-20 8.8		
11	13814070	1	Electric Fuel Feed Pump 12V		
12	13814072	2	NIPPLE EYE		
13	57000361	2	Washer 10-14-1,5		
14	51030006	2	Washer DIN 125-6		
15	52102154	2	Bolt DIN 933 M6-10 8.8		
16	51086015	1	One Ear Clamp With Interior Ring		
17	13814017.5	1	Fuel Pump Hose		
NS	58088283	1	Pastic Cable Zip Tie [NS]		
NS	60900126	1	TERMINAL [NS]		

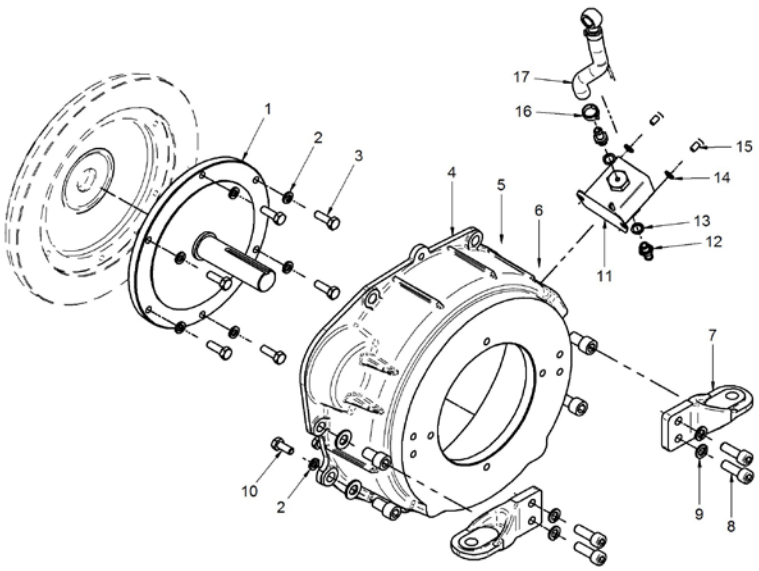

[NS] Not shown

Kit Gearbox

13810103.6			Kit S-Drive SD20 YANMAR		
FIG.	REF.	QTY	DESCR.	FROM	UPTO
1	13810047	1	Flywheel Supplement		
2	53033008	16	Washer GROWER DIN 127-8		
3	52101264	6	Bolt DIN 931 M8-55 8.8		
4	52102257	10	Bolt DIN 933 M8-20 8.8		
5	17610016	1	Engine Adaptor SAE7		
6	13810045	1	Adaptor SAE6 TO SAE7		
7	52103308	6	Bolt DIN 912 M10-25 8.8		
8	53038008	8	Washer DIN 6798-A 8		
9	52102259	8	Bolt DIN 933 M8-30 8.8		
10	53203357	4	Bolt DIN 912 M12-1,25-20 12.9		
11	53038012	4	Washer DIN 6798-A 12		
12	13814070	1	Electric Fuel Feed Pump 12V		
13	13814072	2	NIPPLE EYE		
14	57000361	2	Washer 10-14-1,5		
15	51030006	2	Washer DIN 125-6		
16	52102154	2	Bolt DIN 933 M6-10 8.8		
17	51086015	1	One Ear Clamp With Interior Ring		
18	13814017.5	1	Fuel Pump Hose		
NS	58088283	1	Pastic Cable Zip Tie [NS]		
NS	60900126	1	TERMINAL [NS]		

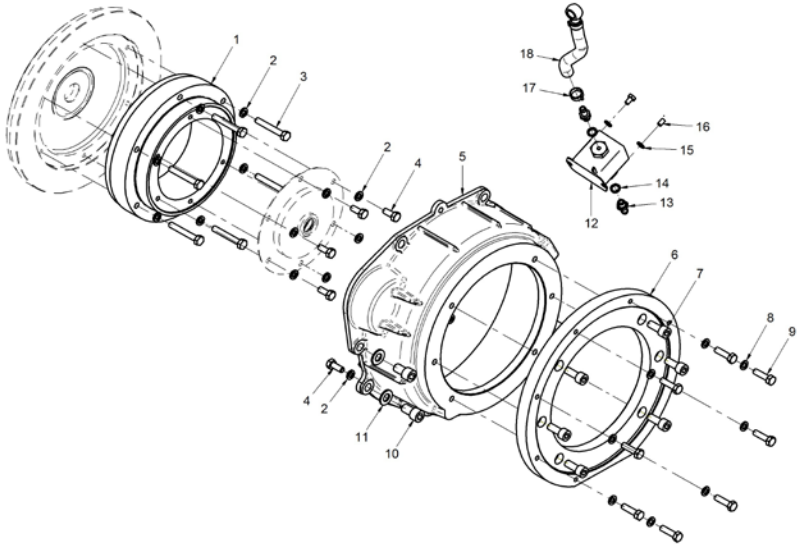

[NS] Not shown

Kit Gearbox

	13810104.6		Kit S-Drive VOLVO 130S		
FIG.	REF.	QTY	DESCR.	FROM	UPTO
1	13810049	1	Flywheel Supplement		
2	13810046	1	Flexible Coupling Type A SAE 6,5		
3	53033008	10	Washer GROWER DIN 127-8		
4	52101259	6	Bolt DIN 931 M8-30 8.8		
5	17610014	1	Engine Adaptor		
6	51030010	6	Washer DIN 125-10		
7	52101311	6	Bolt DIN 931 M10-40 8.8		
8	53203357	4	Bolt DIN 912 M12-1,25-20 12.9		
9	53038012	4	Washer DIN 6798-A 12		
10	52102257	4	Bolt DIN 933 M8-20 8.8		
11	13814070	1	Electric Fuel Feed Pump 12V		
12	13814072	2	NIPPLE EYE		
13	57000361	2	Washer 10-14-1,5		
14	51030006	2	Washer DIN 125-6		
15	52102154	2	Bolt DIN 933 M6-10 8.8		
16	51086015	1	One Ear Clamp With Interior Ring		
17	13814017.5	1	Fuel Pump Hose		
NS	58088283	1	Pastic Cable Zip Tie [NS]		
NS	60900126	1	TERMINAL [NS]		

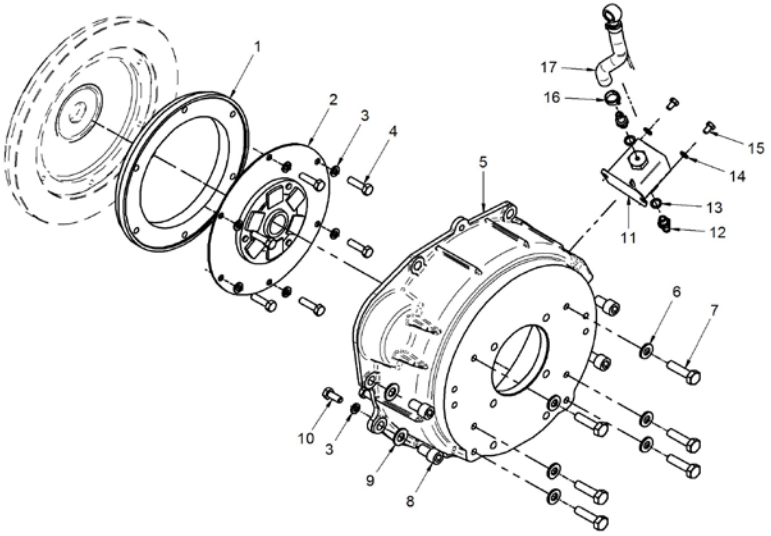

[NS] Not shown

Kit Gearbox

13810105.6			Kit GearBox VOLVO MS-2 & MS-2B		
FIG.	REF.	QTY	DESCR.	FROM	UPTO
1	52102156	6	Bolt DIN 933 M6-16 8.8		
2	53033006	6	Washer GROWER DIN 127-6		
3	13810042	1	Flexible Coupling Type F D. 175 VULKAN		
4	17610022	1	Flywheel Supplement		
5	53033008	10	Washer GROWER DIN 127-8		
6	52102257	10	Bolt DIN 933 M8-20 8.8		
7	52102309	6	Bolt DIN 933 M10-30 8.8		
8	53038010	6	Washer DIN 6798-A 10		
9	17610014	1	Engine Adaptor		
10	13810037.1	2	Support REAR		
11	52103309	4	Bolt DIN 912 M10-30 8.8		
12	53033010	4	Washer GROWER DIN 127-10		
13	53203357	3	Bolt DIN 912 M12-1,25-20 12.9		
14	53038012	3	Washer DIN 6798-A 12		
15	13814070	1	Electric Fuel Feed Pump 12V		
16	13814072	2	NIPPLE EYE		
17	57000361	2	Washer 10-14-1,5		
18	51030006	2	Washer DIN 125-6		
19	52102154	2	Bolt DIN 933 M6-10 8.8		
20	51086015	1	One Ear Clamp With Interior Ring		
21	13814017.5	1	Fuel Pump Hose		
NS	58088283	1	Pastic Cable Zip Tie [NS]		
NS	60900126	1	TERMINAL [NS]		

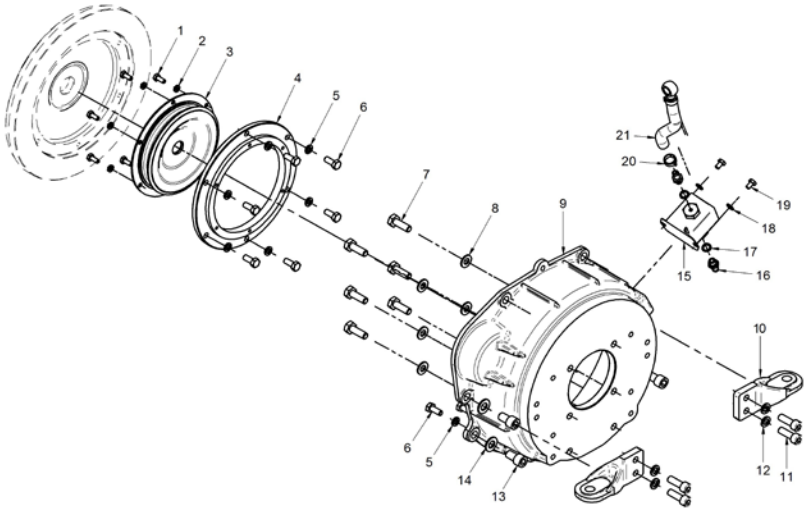

[NS] Not shown

Kit Gearbox

	13810107.6		Kit GearBox TMC-40P v6		
FIG.	REF.	QTY	DESCR.	FROM	UPTO
1	13810046	1	Flexible Coupling Type A SAE 6,5		
2	53033008	12	Washer GROWER DIN 127-8		
3	52103256	6	Bolt DIN 912 M8-15 8.8		
4	52102259	6	Bolt DIN 933 M8-30 8.8		
5	53038008	6	Washer DIN 6798-A 8		
6	13810056	1	Engine adaptor		
7	53038012	4	Washer DIN 6798-A 12		
8	53203357	4	Bolt DIN 912 M12-1,25-20 12.9		
9	13810037	2	Support REAR		
10	53033010	6	Washer GROWER DIN 127-10		
11	52103309	6	Bolt DIN 912 M10-30 8.8		
12	24810901	1	Bracket, GearBox Control		
13	51030005	2	Washer DIN 125-5		
14	24810913	1	Clamp,CABLE		
15	51030008	2	Washer DIN 125-8		
16	52120008	2	Nut DIN 934 M8 8.8		
17	14719115	1	Coupling,cable		
18	51030006	3	Washer DIN 125-6		
19	51051107	1	Pin DIN-94 1,6-16		
20	52102257	4	Bolt DIN 933 M8-20 8.8		
21	13814070	1	Electric Fuel Feed Pump 12V		
22	13814072	2	NIPPLE EYE		
23	57000361	2	Washer 10-14-1,5		
24	52102154	2	Bolt DIN 933 M6-10 8.8		
25	13814017.5	1	Fuel Pump Hose		
26	51086015	1	One Ear Clamp With Interior Ring		
NS	58088283	1	Pastic Cable Zip Tie [NS]		
NS	60900126	1	TERMINAL [NS]		

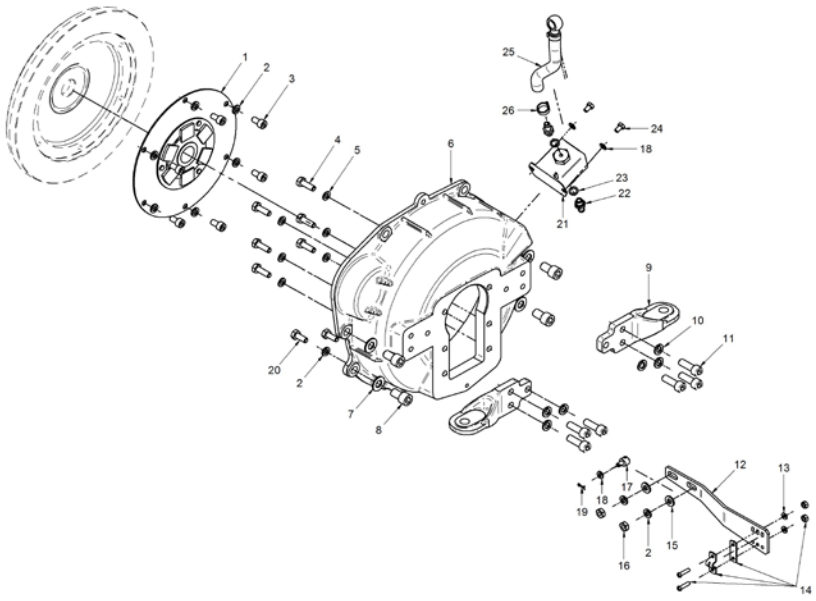

[NS] Not shown

Kit Gearbox

	13810111.6		Kit S-Drive VOLVO 110S		
FIG.	REF.	QTY	DESCR.	FROM	UPTO
1	52101259	6	Bolt DIN 931 M8-30 8.8		
2	53033008	16	Washer GROWER DIN 127-8		
3	13810021	1	Spacer, VOLVO Stern Drive 110S		
4	52102258	6	Bolt DIN 933 M8-25 8.8		
5	17610021	1	Coupling, Drive		
6	17610016	1	Engine Adaptor SAE7		
7	13810016	1	Spacer,VOLVO Stern Drive ADAP.110S		
8	53033010	12	Washer GROWER DIN 127-10		
9	52103308	6	Bolt DIN 912 M10-25 8.8		
10	52101310	6	Bolt DIN 931 M10-35 8.8		
11	52102257	4	Bolt DIN 933 M8-20 8.8		
12	53203357	4	Bolt DIN 912 M12-1,25-20 12.9		
13	53038012	4	Washer DIN 6798-A 12		
14	13814070	1	Electric Fuel Feed Pump 12V		
15	13814072	2	NIPPLE EYE		
16	57000361	2	Washer 10-14-1,5		
17	51030006	2	Washer DIN 125-6		
18	52102154	2	Bolt DIN 933 M6-10 8.8		
19	51086015	1	One Ear Clamp With Interior Ring		
20	13814017.5	1	Fuel Pump Hose		
NS	58088283	1	Pastic Cable Zip Tie [NS]		
NS	60900126	1	TERMINAL [NS]		

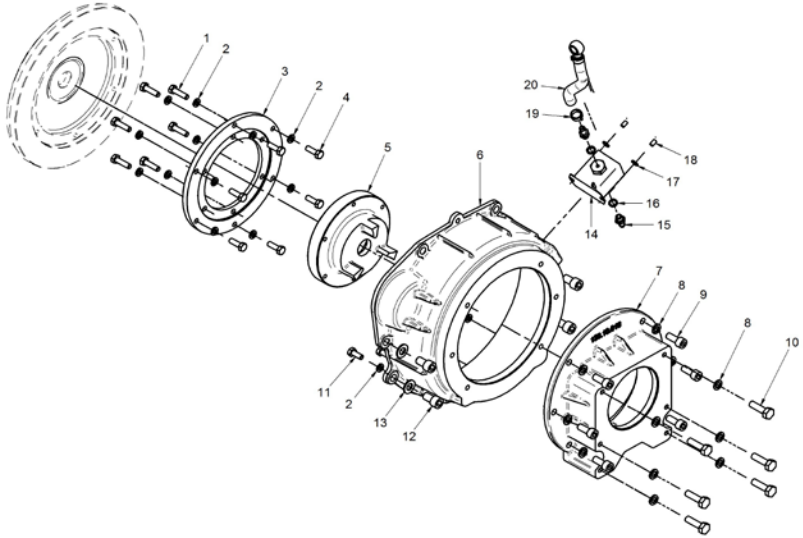

[NS] Not shown

Kit Gearbox

	13810125.6		Kit S-Drive BUKH DV10 & DV20		
FIG.	REF.	QTY	DESCR.	FROM	UPTO
1	13810025.4	1	Shaft		
2	53033008	10	Washer GROWER DIN 127-8		
3	52102258	6	Bolt DIN 933 M8-25 8.8		
4	17310027	1	KEY		
5	13910027	1	Washer		
6	52102308	7	Bolt DIN 933 M10-25 8.8		
7	17610016	1	Engine Adaptor SAE7		
8	13910026	1	BUKH S-Drive DV-20 Adaptor Flange		
9	53033010	6	Washer GROWER DIN 127-10		
10	12110018	1	Stud		
11	53038008	1	Washer DIN 6798-A 8		
12	52120008	1	Nut DIN 934 M8 8.8		
13	16511007	6	Stud		
14	53038010	6	Washer DIN 6798-A 10		
15	52120010	6	Nut DIN 934 M10 8.8		
16	53203357	4	Bolt DIN 912 M12-1,25-20 12.9		
17	53038012	4	Washer DIN 6798-A 12		
18	52102257	4	Bolt DIN 933 M8-20 8.8		
19	13814070	1	Electric Fuel Feed Pump 12V		
20	13814072	2	NIPPLE EYE		
21	57000361	2	Washer 10-14-1,5		
22	51030006	2	Washer DIN 125-6		
23	52102154	2	Bolt DIN 933 M6-10 8.8		
24	51086015	1	One Ear Clamp With Interior Ring		
25	13814017.5	1	Fuel Pump Hose		
NS	58088283	1	Pastic Cable Zip Tie [NS]		
NS	60900126	1	TERMINAL [NS]		

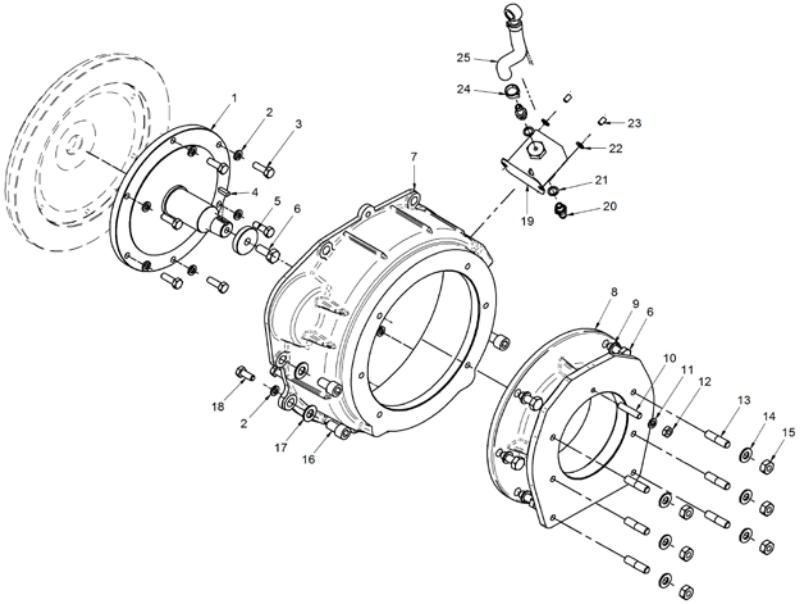

[NS] Not shown

Kit Gearbox

	13810241.6		Kit GearBox TMC-60		
FIG.	REF.	QTY	DESCR.	FROM	UPTO
1	13810046	1	Flexible Coupling Type A SAE 6,5		
2	53033008	12	Washer GROWER DIN 127-8		
3	52103256	6	Bolt DIN 912 M8-15 8.8		
4	52101259	6	Bolt DIN 931 M8-30 8.8		
5	53038008	6	Washer DIN 6798-A 8		
6	13810056	1	Engine adaptor		
7	13810037.1	2	Support REAR		
8	52103309	4	Bolt DIN 912 M10-30 8.8		
9	53033010	4	Washer GROWER DIN 127-10		
10	24880901	1	Bracket, GearBox Control		
11	51030005	2	Washer DIN 125-5		
12	24810913	1	Clamp,CABLE		
13	51030008	2	Washer DIN 125-8		
14	52102257	6	Bolt DIN 933 M8-20 8.8		
15	51051107	1	Pin DIN-94 1,6-16		
16	51030006	6	Washer DIN 125-6		
17	ALLPA.93	1	Coupling,cable	23/05/2017	
17	14719115	1	Coupling,cable		23/05/2017
18	53203357	4	Bolt DIN 912 M12-1,25-20 12.9		
19	53038012	4	Washer DIN 6798-A 12		
20	13814072	2	NIPPLE EYE		
21	13814070	1	Electric Fuel Feed Pump 12V		
22	52102154	2	Bolt DIN 933 M6-10 8.8		
23	57000361	2	Washer 10-14-1,5		
24	13814017.5	1	Fuel Pump Hose		
25	51086015	1	One Ear Clamp With Interior Ring		
NS	58088283	1	Pastic Cable Zip Tie [NS]		
NS	60900126	1	TERMINAL [NS]		

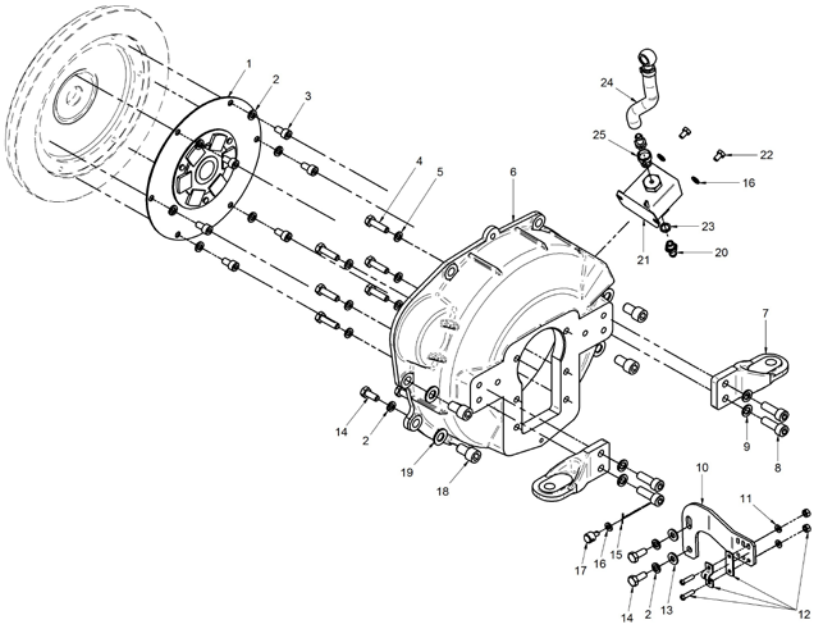

[NS] Not shown

Kit Gearbox

	13810242		Kit Bobtail		
FIG.	REF.	QTY	DESCR.	FROM	UPTO
1	13810090	1	Engine Adaptor SAE7		
2	13810038	2	Support		
3	13810039	2	Support		
4	52203308	8	Bolt DIN 912 M10-1,25-25 12.9		
5	53033010	8	Washer GROWER DIN 127-10		
6	13814072	2	NIPPLE EYE		
7	13814070	1	Electric Fuel Feed Pump 12V		
8	51030006	2	Washer DIN 125-6		
9	52102154	2	Bolt DIN 933 M6-10 8.8		
10	57000361	2	Washer 10-14-1,5		
11	M81510817	0	Fuel Hose D. 8-17 [VAR]		
12	51086015	2	One Ear Clamp With Interior Ring		
13	17214012	1	COLLAR,Union		
14	53033008	4	Washer GROWER DIN 127-8		
15	52102257	4	Bolt DIN 933 M8-20 8.8		
16	53038012	4	Washer DIN 6798-A 12		
17	53203357	4	Bolt DIN 912 M12-1,25-20 12.9		
18	60900126	1	TERMINAL		
19	58088283	1	Pastic Cable Zip Tie		

[VAR] Variable according to repair

Kit Gearbox

	13832100.6		Kit S-Drive SELVA		
FIG.	REF.	QTY	DESCR.	FROM	UPTO
1	13810046	1	Flexible Coupling Type A SAE 6,5		
2	53033008	10	Washer GROWER DIN 127-8		
3	52103256	6	Bolt DIN 912 M8-15 8.8		
4	52101263	6	Bolt DIN 931 M8-50 8.8		
5	53038008	6	Washer DIN 6798-A 8		
6	13810056	1	Engine adaptor		
7	52120008	6	Nut DIN 934 M8 8.8		
8	53203357	4	Bolt DIN 912 M12-1,25-20 12.9		
9	53038012	4	Washer DIN 6798-A 12		
10	52102257	4	Bolt DIN 933 M8-20 8.8		
11	13814072	2	NIPPLE EYE		
12	57000361	2	Washer 10-14-1,5		
13	13814070	1	Electric Fuel Feed Pump 12V		
14	51030006	2	Washer DIN 125-6		
15	52102154	2	Bolt DIN 933 M6-10 8.8		
16	13814017.5	1	Fuel Pump Hose		
17	51086015	1	One Ear Clamp With Interior Ring		
NS	58088283	1	Pastic Cable Zip Tie [NS]		
NS	60900126	1	TERMINAL [NS]		

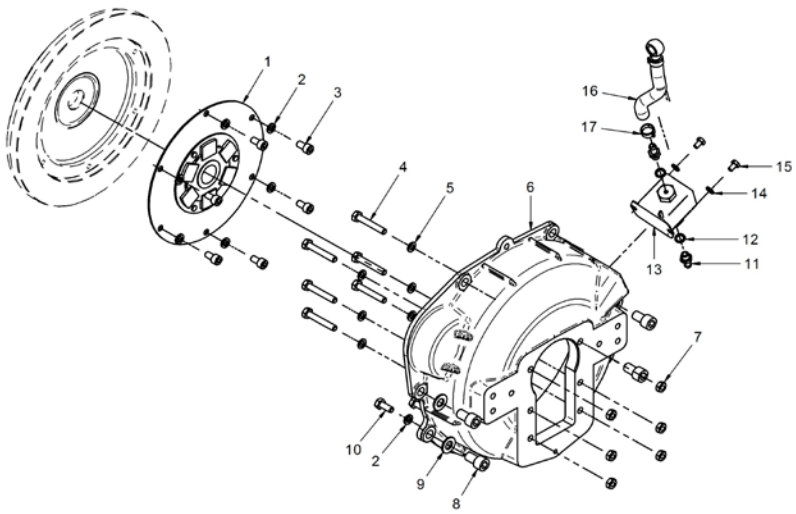

[NS] Not shown

Kit Gearbox

13832100A.6			Kit GearBox TMC/ZF/PRM		
FIG.	REF.	QTY	DESCR.	FROM	UPTO
1	13810046	1	Flexible Coupling Type A SAE 6,5		
2	53033008	10	Washer GROWER DIN 127-8		
3	52103256	6	Bolt DIN 912 M8-15 8.8		
4	52101259	6	Bolt DIN 931 M8-30 8.8		
5	53038008	6	Washer DIN 6798-A 8		
6	13810056	1	Engine adaptor		
7	13810037	2	Support REAR		
8	53033010	6	Washer GROWER DIN 127-10		
9	52103309	6	Bolt DIN 912 M10-30 8.8		
10	53203357	4	Bolt DIN 912 M12-1,25-20 12.9		
11	53038012	4	Washer DIN 6798-A 12		
12	52102257	4	Bolt DIN 933 M8-20 8.8		
13	13814070	1	Electric Fuel Feed Pump 12V		
14	13814072	2	NIPPLE EYE		
15	57000361	2	Washer 10-14-1,5		
16	51030006	2	Washer DIN 125-6		
17	52102154	2	Bolt DIN 933 M6-10 8.8		
18	51086015	1	One Ear Clamp With Interior Ring		
19	13814017.5	1	Fuel Pump Hose		
NS	58088283	1	Pastic Cable Zip Tie [NS]		
NS	60900126	1	TERMINAL [NS]		

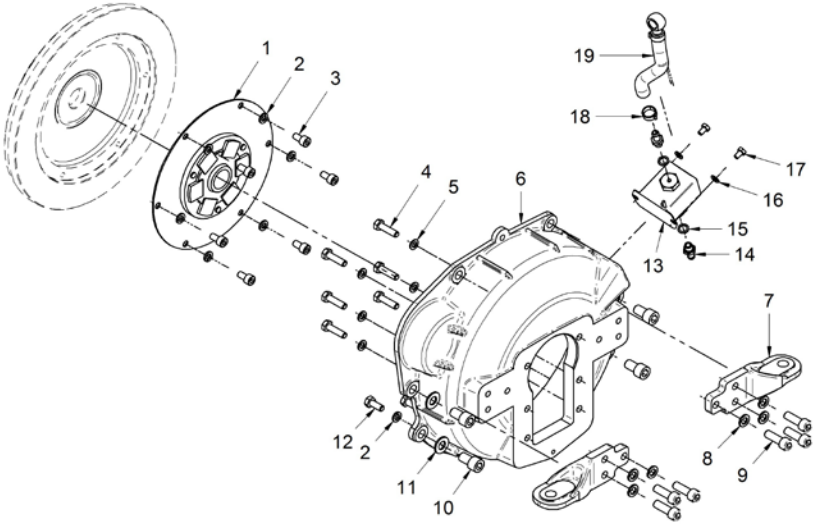

[NS] Not shown

Kit Gearbox

13832100T.6			Kit S-Drive TECHNO.SP60		
FIG.	REF.	QTY	DESCR.	FROM	UPTO
1	13810049	1	Flywheel Supplement		
2	13810046	1	Flexible Coupling Type A SAE 6,5		
3	53033008	10	Washer GROWER DIN 127-8		
4	52102259	6	Bolt DIN 933 M8-30 8.8		
5	17610016	1	Engine Adaptor SAE7		
6	52102309	14	Bolt DIN 933 M10-30 8.8		
7	53038010	16	Washer DIN 6798-A 10		
8	24813501	1	BW Bell Housing		
9	51051107	1	Pin DIN-94 1,6-16		
10	51030006	3	Washer DIN 125-6		
11	14719115	1	Coupling,cable		
12	24810913	1	Clamp,CABLE		
13	51030005	2	Washer DIN 125-5		
14	52101313	2	Bolt DIN 931 M10-50 8.8		
15	53038008	11	Washer DIN 6798-A 8		
16	52101263	8	Bolt DIN 931 M8-50 8.8		
17	40019030	3	Stud		
18	52120008	3	Nut DIN 934 M8 8.8		
19	53203358	4	Bolt DIN 912 M12-1,25-25 12.9		
20	53038012	4	Washer DIN 6798-A 12		
21	52102257	4	Bolt DIN 933 M8-20 8.8		
22	13814070	1	Electric Fuel Feed Pump 12V		
23	13814072	2	NIPPLE EYE		
24	57000361	2	Washer 10-14-1,5		
25	52102154	2	Bolt DIN 933 M6-10 8.8		
26	51086015	1	One Ear Clamp With Interior Ring		
27	13814017.5	1	Fuel Pump Hose		
28	13810001.1	1	Bracket Front, Left		
29	13810002.1	1	RIGHT, front bracket		
30	53033010	4	Washer GROWER DIN 127-10		
31	52203308	4	Bolt DIN 912 M10-1,25-25 12.9		
32	61631100	2	Anti Vibration Mount Type A 50SHA		
NS	M87501927	1	Water Intake Hose (HQ) D. 19-27 [NS]		
NS	13211035	1	Exhaust Manifold Outlet Bend [NS]		
NS	17211036	1	Raccord [NS]		

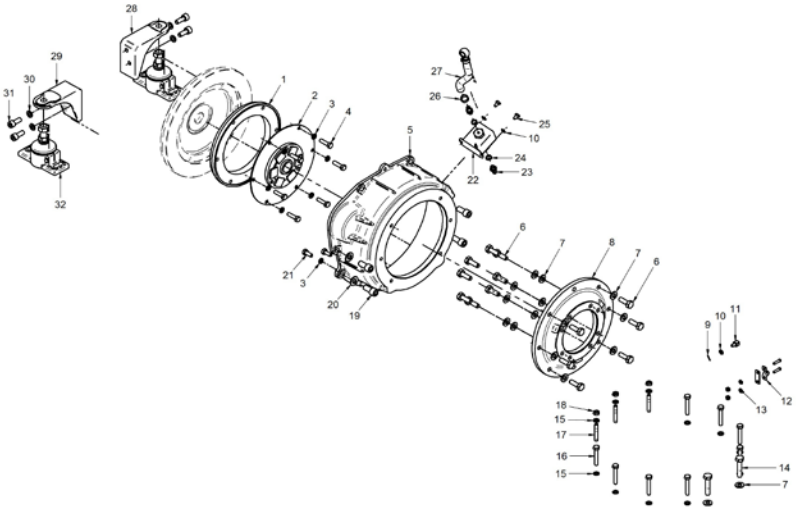

[NS] Not shown

Kit Gearbox

13832100T.6			Kit S-Drive TECHNO.SP60		
FIG.	REF.	QTY	DESCR.	FROM	UPTO
NS	54081020	2	Clamp DIN 3017 20-32/9 W4 [NS]		
NS	58088283	3	Pastic Cable Zip Tie [NS]		
NS	60121005	1	Water Trainer 1/2" [NS]		
NS	60900126	1	TERMINAL [NS]		

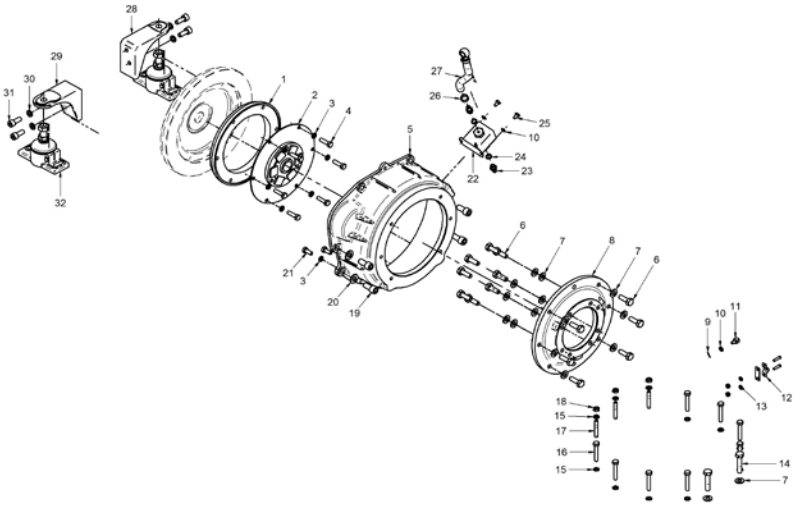

Kit Gearbox

	17610230.6		Kit GearBox ZF 15 MIV		
FIG.	REF.	QTY	DESCR.	FROM	UPTO
1	13810046	1	Flexible Coupling Type A SAE 6,5		
2	53033008	12	Washer GROWER DIN 127-8		
3	52103256	6	Bolt DIN 912 M8-15 8.8		
4	52102308	6	Bolt DIN 933 M10-25 8.8		
5	53038010	6	Washer DIN 6798-A 10		
6	17610017	1	Engine Adaptor		
7	13810037.3	1	Rear, Bracket		
8	53033010	4	Washer GROWER DIN 127-10		
9	52102309	4	Bolt DIN 933 M10-30 8.8		
10	52105307	2	Bolt DIN 7991 M10-20 10.9		
11	51030008	2	Washer DIN 125-8		
12	52120008	2	Nut DIN 934 M8 8.8		
13	ALLPA.93	1	Coupling,cable	23/05/2017	
13	14719115	1	Coupling,cable		23/05/2017
14	51030006	5	Washer DIN 125-6		
15	51051107	1	Pin DIN-94 1,6-16		
16	51030005	2	Washer DIN 125-5		
17	24810913	1	Clamp,CABLE		
18	24610901	1	Bracket, GearBox Control		
19	53203357	4	Bolt DIN 912 M12-1,25-20 12.9		
20	53038012	4	Washer DIN 6798-A 12		
21	13810037.2	1	Rear, Bracket		
22	52102257	4	Bolt DIN 933 M8-20 8.8		
23	13814070	1	Electric Fuel Feed Pump 12V		
24	13814072	2	NIPPLE EYE		
25	57000361	2	Washer 10-14-1,5		
26	52102154	2	Bolt DIN 933 M6-10 8.8		
27	13814017.5	1	Fuel Pump Hose		
28	51086015	1	One Ear Clamp With Interior Ring		
NS	58088283	1	Pastic Cable Zip Tie [NS]		
NS	60900126	1	TERMINAL [NS]		

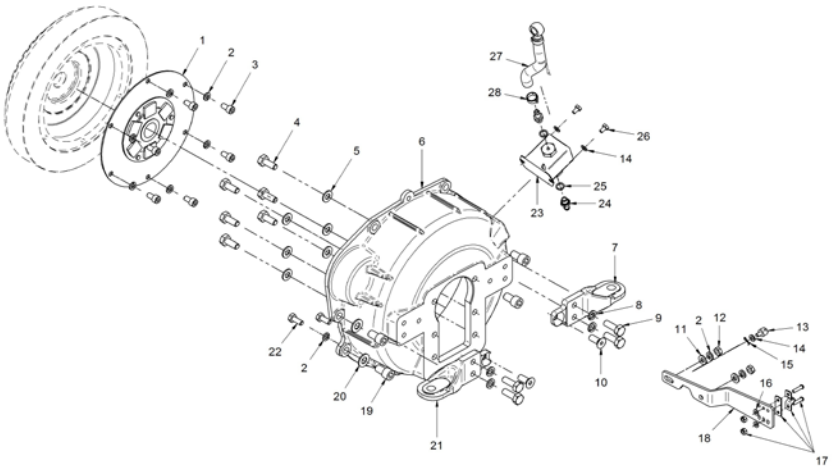

[NS] Not shown

17617101			Kit 2nd Alternator 14V/90A		
FIG.	REF.	QTY	DESCR.	FROM	UPTO
1	13110202	1	Pulley 2A (S)		
2	17617101.1	1	Alternator Bracket		
3	51030010	2	Washer DIN 125-10		
4	52101326	1	Bolt DIN 931 M10-130 8.8		
5	53033010	7	Washer GROWER DIN 127-10		
6	52120010	1	Nut DIN 934 M10 8.8		
7	51030008	1	Washer DIN 125-8		
8	51031008	1	Washer DIN 9021 8		
9	53033008	1	Washer GROWER DIN 127-8		
10	52120008	1	Nut DIN 934 M8 8.8		
11	52102259	1	Bolt DIN 933 M8-30 8.8		
12	52203315	4	Bolt DIN 912 M10-1,25-60 12.9		
13	17217019	1	Alternator 14V/90A		
14	17417020	1	Pulley Alternator		
15	17617101.2	1	Strap, Alternator		
16	51030006	4	Washer DIN 125-6		
17	52102159	2	Bolt DIN 933 M6-30 8.8		
18	53033006	2	Washer GROWER DIN 127-6		
19	52120006	2	Nut DIN 934 M6 8.8		
22	17617101.3	1	Alternator Bracket		
23	52102307	2	Bolt DIN 933 M10-20 8.8		
NS	17017103.2	1	Belt Type AX 23 [NS]		

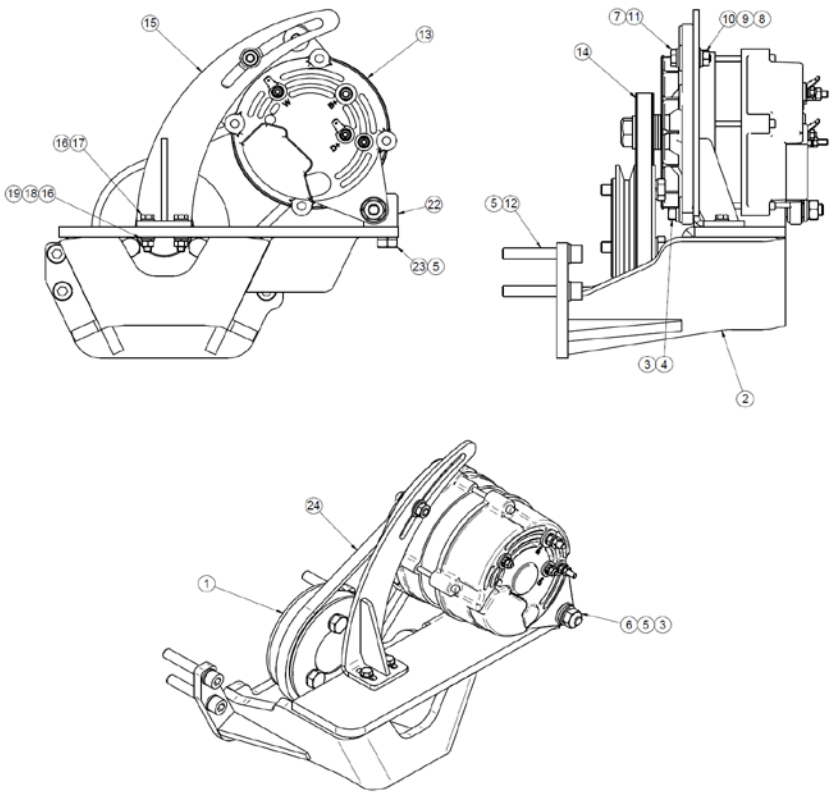

[NS] Not shown

17617201			Kit Wire Earth Isolated Alternator 14V/7		
FIG.	REF.	QTY	DESCR.	FROM	UPTO
1	19017113	1	Relay 12 V, Earth Isolated		
2	13817008	1	Support,relay		
3	51030006	3	Washer DIN 125-6		
4	52102155	4	Bolt DIN 933 M6-12 8.8		
5	60900978	1	Switch, Oil Press		
6	17117052	1	Oil Pressure Sensor Adaptor		
7	56000073	2	Copper Washer 16-23-1,5		
8	60900999	2	Connection M14X1,5 5/8" EXA.22 L=22		
9	60900982	1	Temperature SENDER		
10	56000069	1	Washer 14-20-1,5		
11	60900972	1	High Coolant, 2 Poles		
12	14419023	1	Ball JOINT		
13	52120006	1	Nut DIN 934 M6 8.8		
14	15119015	1	CABLE Holder Ball		
15	13819001	1	Clamp		
16	54102109	2	Bolt DIN 933 M5-25 INOX.		
17	52120005	2	Nut DIN 934 M5 8.8		
18	51030005	2	Washer DIN 125-5		
19	13817020B	1	Alt. 14V/75A		
20	52102260	1	Bolt DIN 933 M8-35 8.8		
21	52120008	2	Nut DIN 934 M8 8.8		
22	13017013	2	Bracket Bakelit Bushing		
23	17217012	2	Tensor Bakelite Bushing		
24	13817114	1	Spacer 8,5X25X19		
25	17417010	2	Bakelite Bushing		
26	17417014	2	Washer		
27	51031008	1	Washer DIN 9021 8		
28	53033008	2	Washer GROWER DIN 127-8		
29	17314017.4	1	Pipe, Filter TO INJ. Pump	22/09/2017	
30	51086015	1	One Ear Clamp With Interior Ring	22/09/2017	
NS	13814019	1	Pipe [NS]	25/01/2018	
NS	51030008	1	Washer DIN 125-8 [NS]	22/09/2017	
NS	52102256	1	Bolt DIN 933 M8-15 8.8 [NS]	22/09/2017	
NS	58088284	1	Pastic Cable Zip Tie [NS]		
NS	58088285	1	Pastic Cable Zip Tie [NS]		

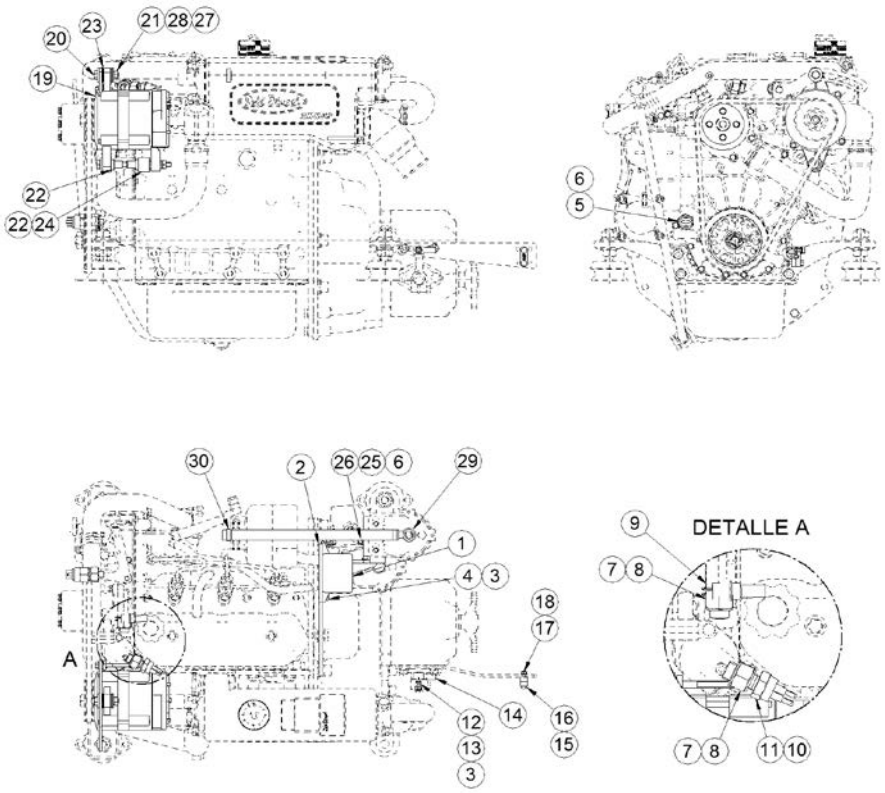

[NS] Not shown

17617201			Kit Wire Earth Isolated Alternator 14V/7		
FIG.	REF.	QTY	DESCR.	FROM	UPTO
NS	60900126	1	TERMINAL [NS]		
NS	60938205	1	Wir. Electrical Isolated MINI-17/29 SVT [NS]		
NS	60939048	1	MASS BLACK TO Wiring START [NS]		

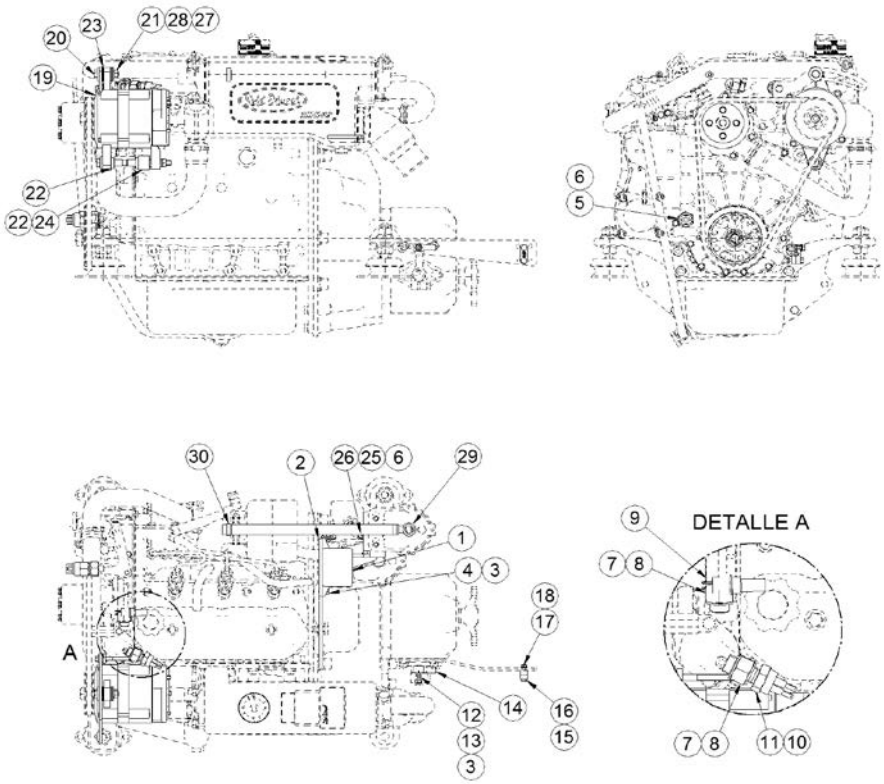

24813510			Kit Water Leak Sensor & Alarm SP60 12V		
FIG.	REF.	QTY	DESCR.	FROM	UPTO
1	60938203	1	SPROP60 Water SYStem Alarm SYSTEM		
2	24813504	1	Water Alarm Sensor		

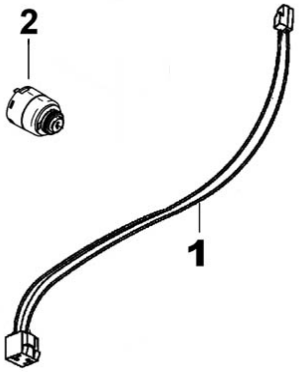

Other Kits

13810050.6			Kit Conversion MINI-1/3 to MINI-17 v6		
FIG.	**REF.**	**QTY**	**DESCR.**	**FROM**	**UPTO**
1	13810015.1	2	MINI 17/29 Engine Base Plate v6		
2	13810037E	2	Support Rear		
3	13810068.1	1	Bracket, Front Left (Width 185-187)		
4	13810068.2	1	Bracket, Front Right (Width 185-187)		
5	51030008	8	Washer DIN 125-8		
6	53033008	8	Washer GROWER DIN 127-8		
7	52102259	8	Bolt DIN 933 M8-30 8.8		
8	40019010	1	Bell Housing		

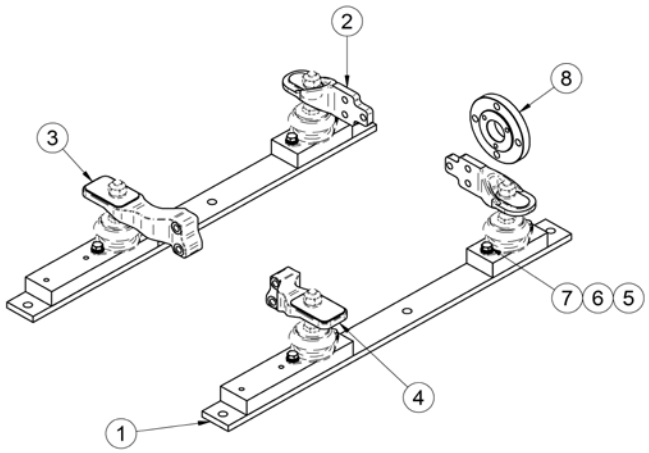

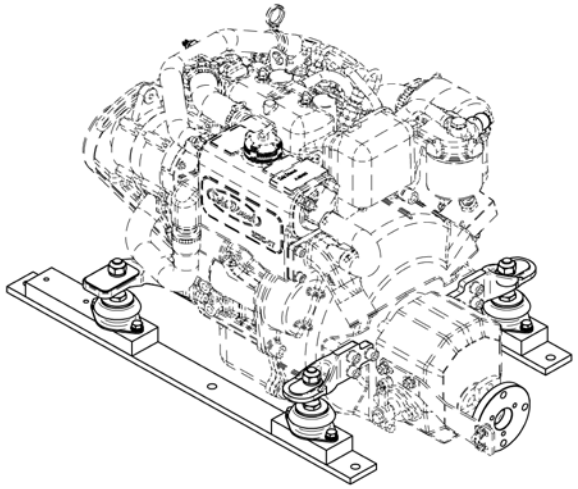

Other Kits

13810118S			Front Water Pomp MINI-17/29 Kit(Spline)		
FIG.	REF.	QTY	DESCR.	FROM	UPTO
1	13810118	1	Front Water Pump MINI-17/29 Kit Complete		

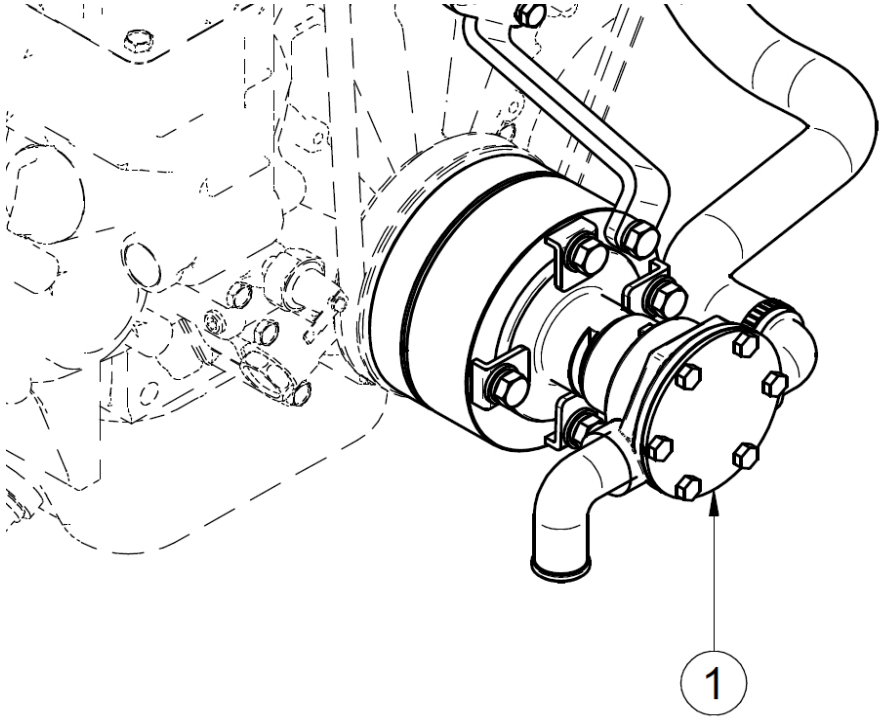

Other Kits

	13811158		Boiler Kit (S)		
FIG.	**REF.**	**QTY**	**DESCR.**	**FROM**	**UPTO**
1	13511050	1	NIPPLE,heater		
2	56000073	1	Copper Washer 16-23-1,5		
3	17124053	2	Joint		
4	13811044	1	Nipple,heater		
5	54081020	1	Clamp DIN 3017 20-32/9 W4		

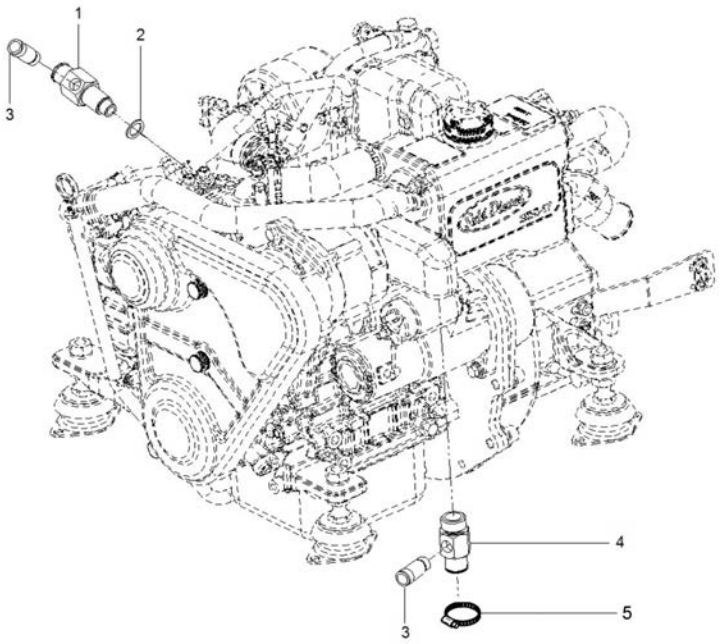

Other Kits

	13812010		Pressure Gauge Kit 10 BAR		
FIG.	REF.	QTY	DESCR.	FROM	UPTO
1	13812013.1	1	Pressure Tap		
2	13812011	1	Flexible Hose F-M G1/4-M16x2		
3	13812012	1	Pressure Gauge 0-10 bar		
4	13812014	1	Protective Rubber		

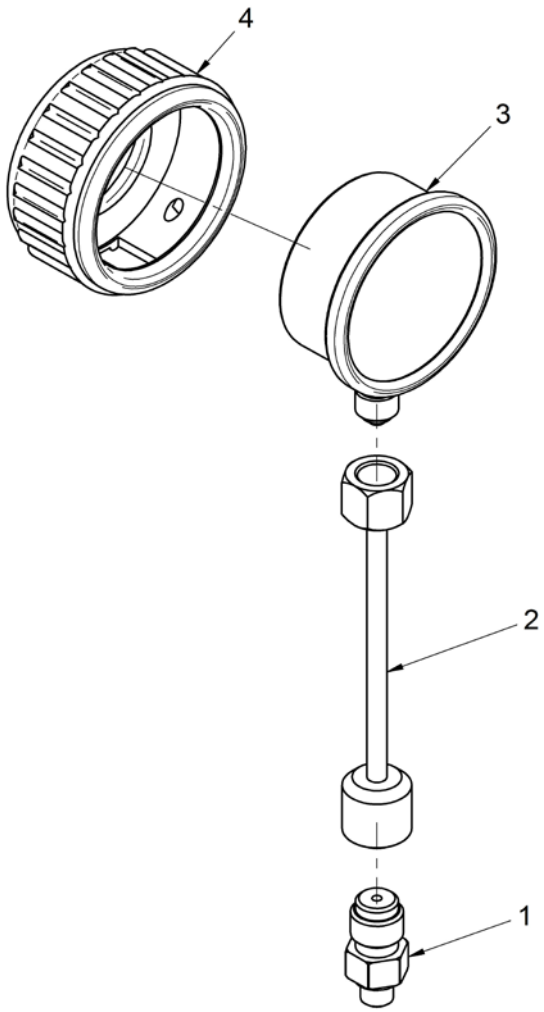

	17710212		Kit Cooler Assy TMC-60		
FIG.	REF.	QTY	DESCR.	FROM	UPTO
1	24880107	1	Kit Oil Cooler TMC-60 D.25		
2	54081020	2	Clamp DIN 3017 20-32/9 W4		
3	52102157	1	Bolt DIN 933 M6-20 8.8		
4	51030006	1	Washer DIN 125-6		
5	59071383	1	Clamp TYP.1 38/15 W1		
6	13817011	1	Bracket		
7	51031006	1	Washer DIN 9021 6		
8	52120006	1	Nut DIN 934 M6 8.8		
NS	M87502535	1	Water Intake Hose (HQ) D. 25-33 [NS]		
NS	58088281	2	Pastic Cable Zip Tie [NS]		

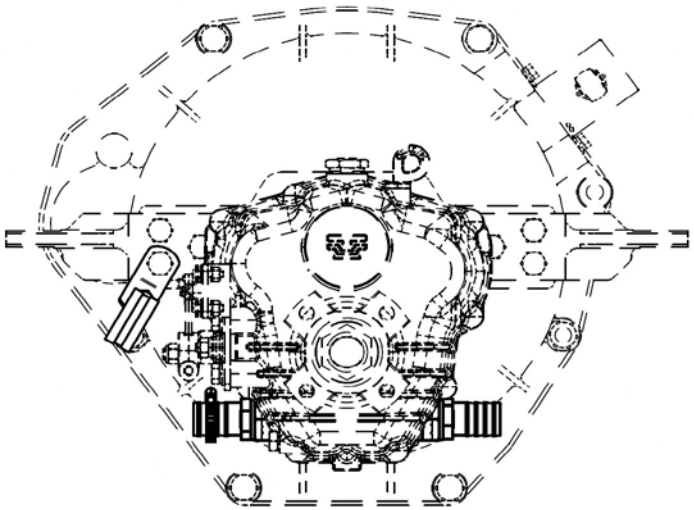

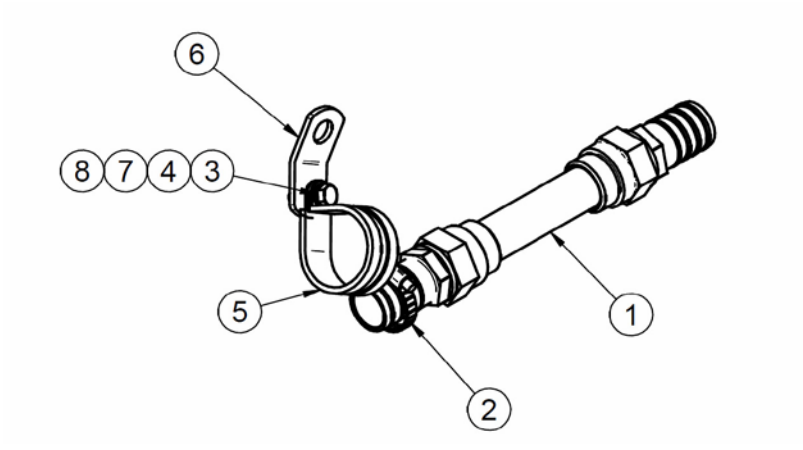

[NS] Not shown

Exhaust System

	17613042		Exhaust Flange (S)		
FIG.	**REF.**	**QTY**	**DESCR.**	**FROM**	**UPTO**
1	17613042.1	1	Exhaust Flange (S)		

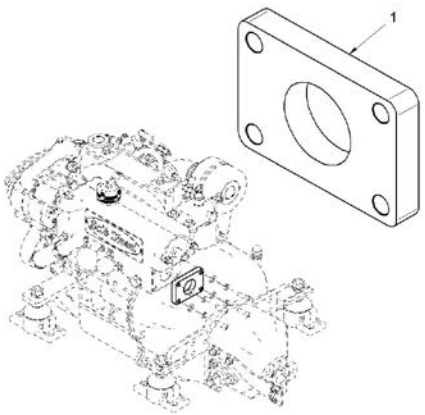

Exhaust System

	17613115C		Dry Exhaust SYStem, Elbow (S)		
FIG.	**REF.**	**QTY**	**DESCR.**	**FROM**	**UPTO**
1	17613115	1	Kit Dry Exhaust With Flexible Pipe (S)		
2	13211035	1	Exhaust Manifold Outlet Bend		

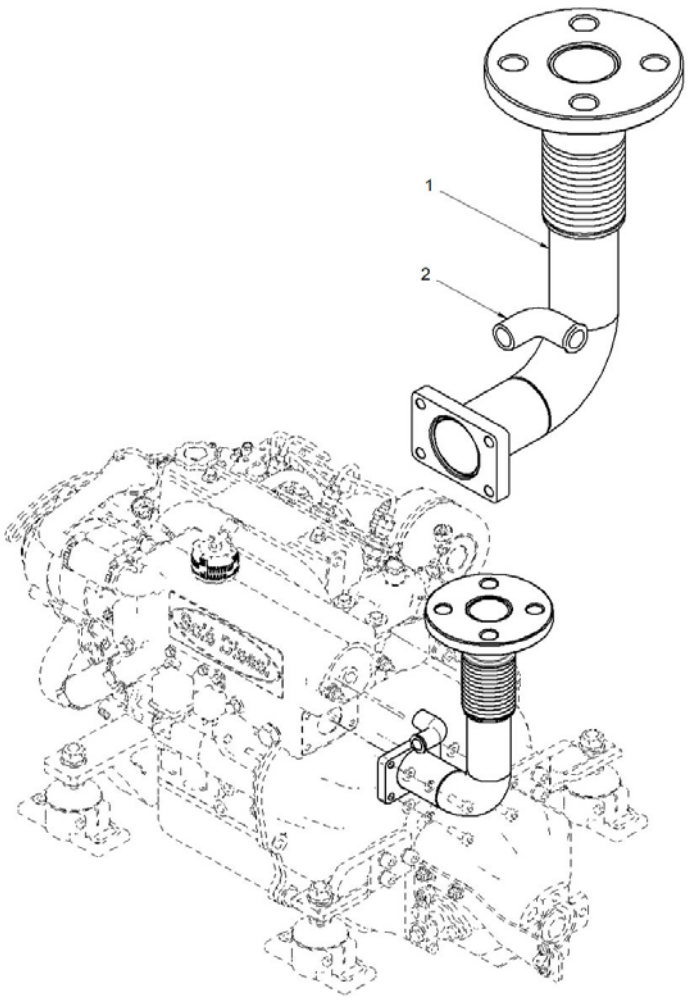

Exhaust System

17613118			Kit Dry Exh. Flexible Pipe & Silencer(S)		
FIG.	**REF.**	**QTY**	**DESCR.**	**FROM**	**UPTO**
1	17613115	1	Kit Dry Exhaust With Flexible Pipe (S)		
2	52120016	4	Nut DIN 934 M16 8.8		
3	53033016C	4	Washer	10/12/2009	
4	51030016	8	Washer DIN 125-16		
5	13413016	1	Gasket		
6	52101465	4	Bolt DIN 931 M16-60 8.8		
7	13813018	1	Exhaust Muffler		
8	13413019	1	RAINCover		

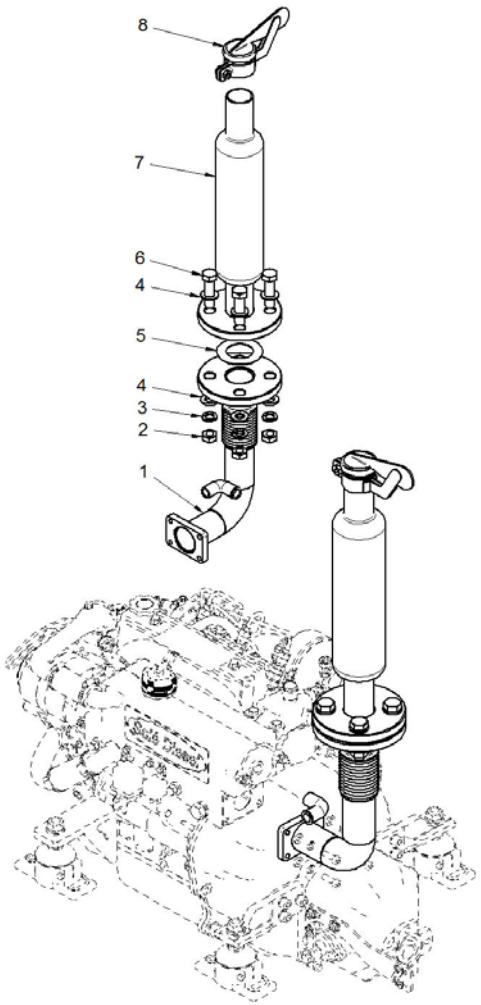

Power Take-off Pulley

	13110101		Pulley 2B (S)		
FIG.	**REF.**	**QTY**	**DESCR.**	**FROM**	**UPTO**
1	13110101.1	1	Pulley 2B		
2	53033010	3	Washer GROWER DIN 127-10		
3	52201315	3	Bolt DIN 931 M10-1,25-60 8.8		

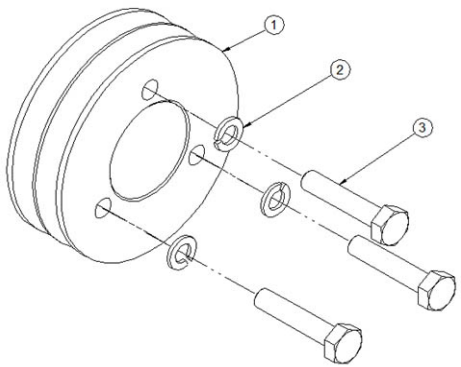

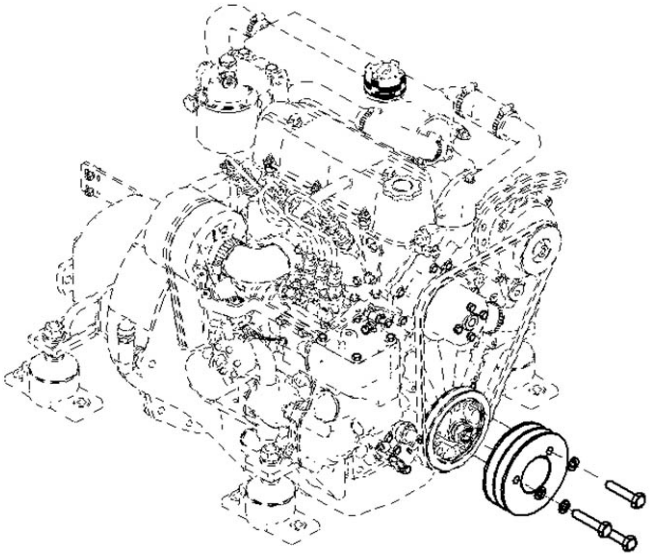

Power Take-off Pulley

	13110102		Pulley 1B (S)		
FIG.	**REF.**	**QTY**	**DESCR.**	**FROM**	**UPTO**
1	13110102.1	1	Pulley		
2	53033010	3	Washer GROWER DIN 127-10		
3	52202311	3	Bolt DIN 933 M10-1,25-40 8.8		

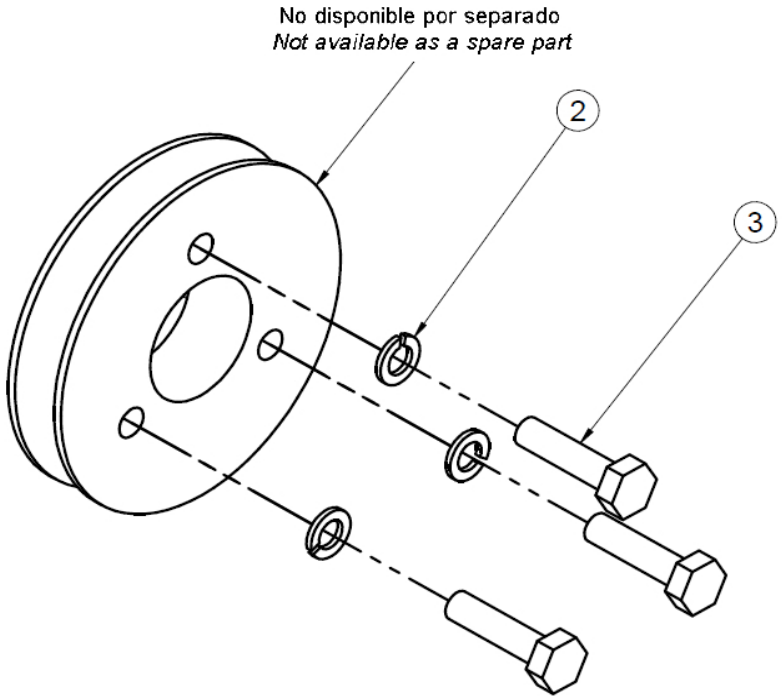

Power Take-off Pulley

	13110202		Pulley 2A (S)		
FIG.	**REF.**	**QTY**	**DESCR.**	**FROM**	**UPTO**
1	13110202.1	1	Pulley 2A	15/06/2016	
2	53033010	3	Washer GROWER DIN 127-10	15/06/2016	
3	52201313	3	Bolt DIN 931 M10-1,25-50 8.8	15/06/2016	

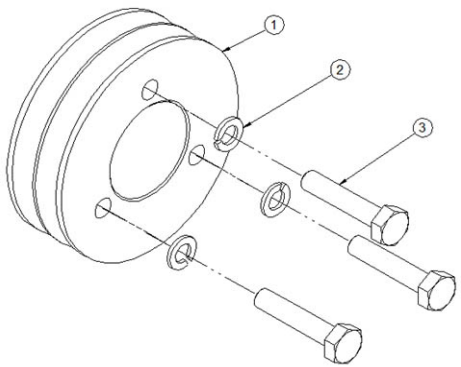

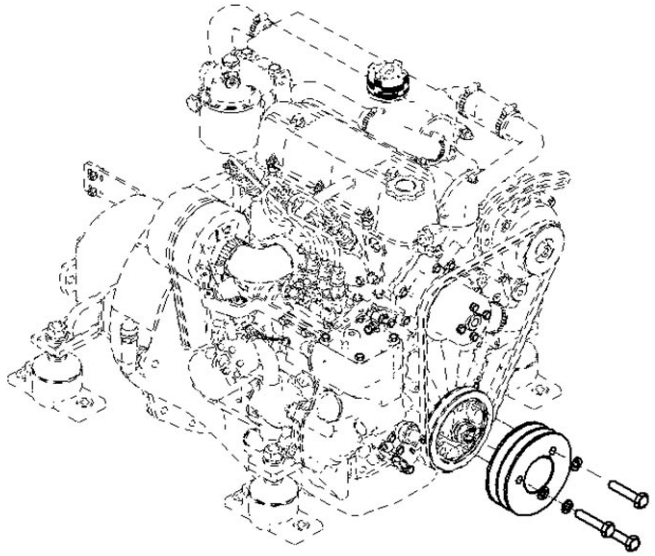

Kit Keel Cooling

13811200.2			Kit Keel Cooling & Dry Exhaust (S)		
FIG.	REF.	QTY	DESCR.	FROM	UPTO
1	13120046	1	Cover Oil Pump SH		
2	13120047	1	Gasket Water Pump		
3	13911002	2	Cover		
4	13811007	2	O-Ring D. 57X2,5		
5	17613014	1	Gasket		
6	17613042	1	Exhaust Flange (S)		
7	52103259	4	Bolt DIN 912 M8-30 8.8		
NS	52102157	1	Bolt DIN 933 M6-20 8.8 [NS]		
NS	53038006	1	Washer DIN 6798-A 6 [NS]		

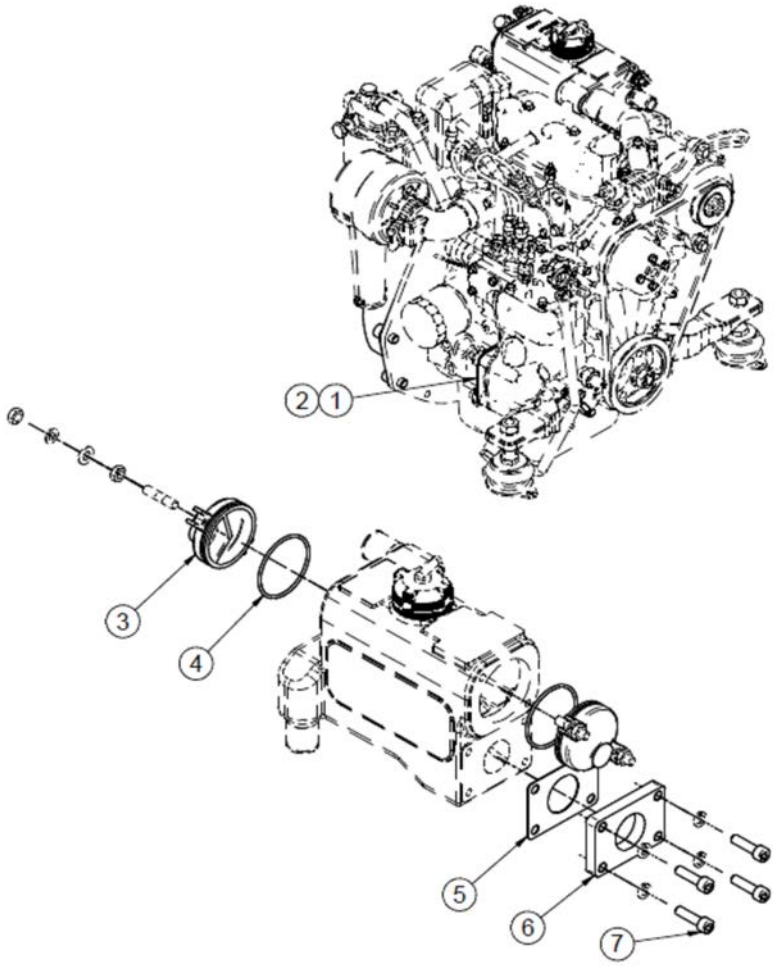

[NS] Not shown

Kit Instrument Panel SVT

	13817217		Suplement Panel SVT 30 MINI-17/29		
FIG.	REF.	QTY	DESCR.	FROM	UPTO
1	60938132	1	SVT 30 MINI-17/29 Panel		
2	13817053	1	SENDER Holder		
3	60900985	1	Pressure Sensor		
4	TFH.1M.6.3.08	1	Straight Receptacle 1 Sec. Faston		
5	60900063	1	Insulator Cap Faston 6.3		

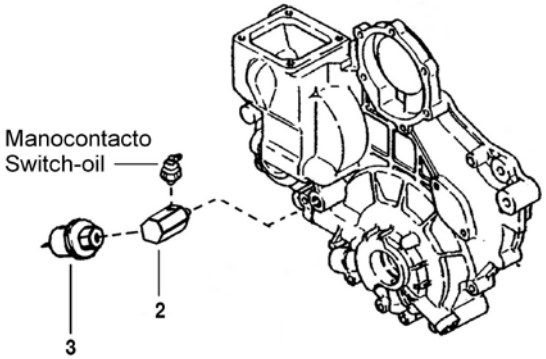

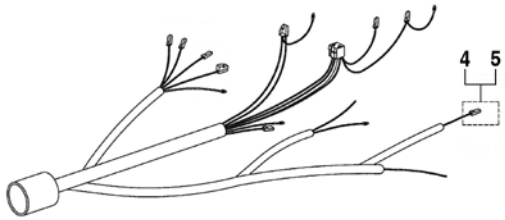

Kit Instrument Panel SVT

	60910022		SVT 20 Panel 12V + Exh. Temp. Alarm Kit		
FIG.	REF.	QTY	DESCR.	FROM	UPTO
1	60900280	1	Exhaust Temperature Alarm Kit		
2	60910001	1	SVT 20 Panel 12V		

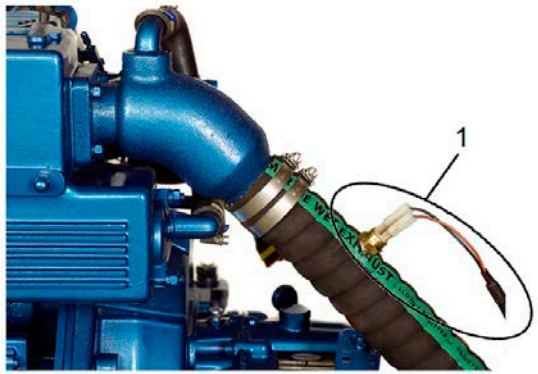

Kit Instrument Panel SVT

60910024			SVT 30 Panel 12V + Exh. Temp. Alarm Kit		
FIG.	**REF.**	**QTY**	**DESCR.**	**FROM**	**UPTO**
1	60900280	1	Exhaust Temperature Alarm Kit		
2	60910004	1	SVT 30 Panel 12V		

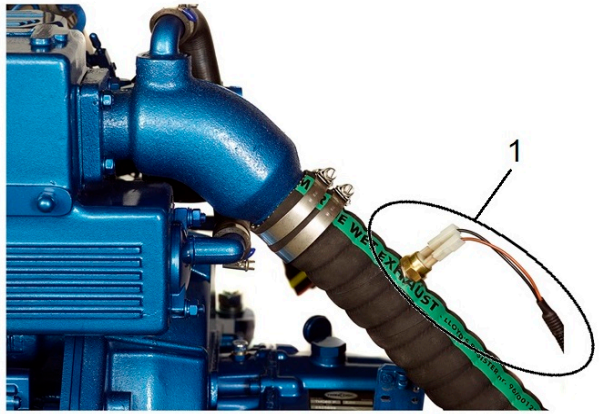

Kit Instrument Panel SVT

	60938135		Kit 2nd Panel SVT 40 MINI-17/29 12V		
FIG.	REF.	QTY	DESCR.	FROM	UPTO
1	60938130	1	SVT 20 MINI-17/29 Panel	15/06/2016	
2	60938134	1	SVT 40 MINI-17/29 Panel	15/06/2016	
3	60900210.2	1	T Double Panel DERIVATION	15/06/2016	

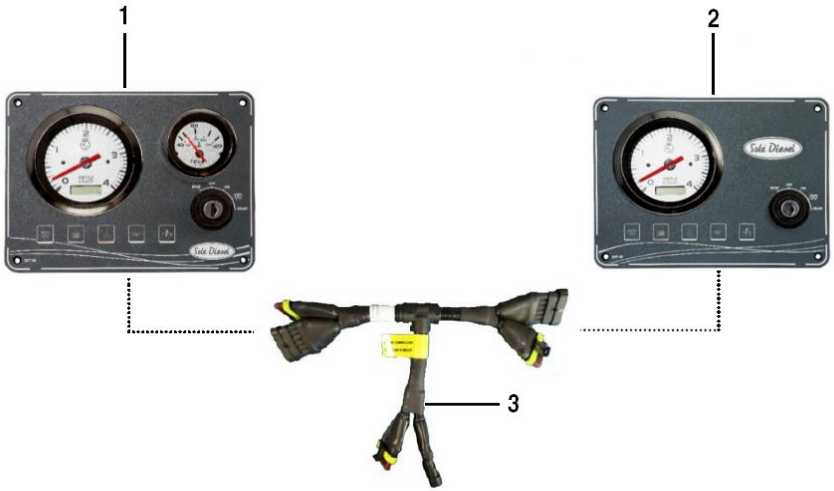

SVT 10 Panel

	60910000		SVT 10 Panel 12V		
FIG.	**REF.**	**QTY**	**DESCR.**	**FROM**	**UPTO**
1	60930005.1	1	Panel N.1		
2	60900037	1	Key-Locking		
3	60900037.2	1	Connector		
4	54108004	2	Bolt DIN 84 M3-12 INOX.		
5	60900301.2	1	Integrated Circuit Plate 12V Protection		30/08/2017
5	60900301.3	1	V3 C.I. 12V Prop. Engine Board.Varnished	31/08/2017	
6	60930006.1	1	Gasket Panel		
7	60900096	1	Cover Plate for Motor Propeller		
8	60900091	1	MICRO Relay 12V 12-20		

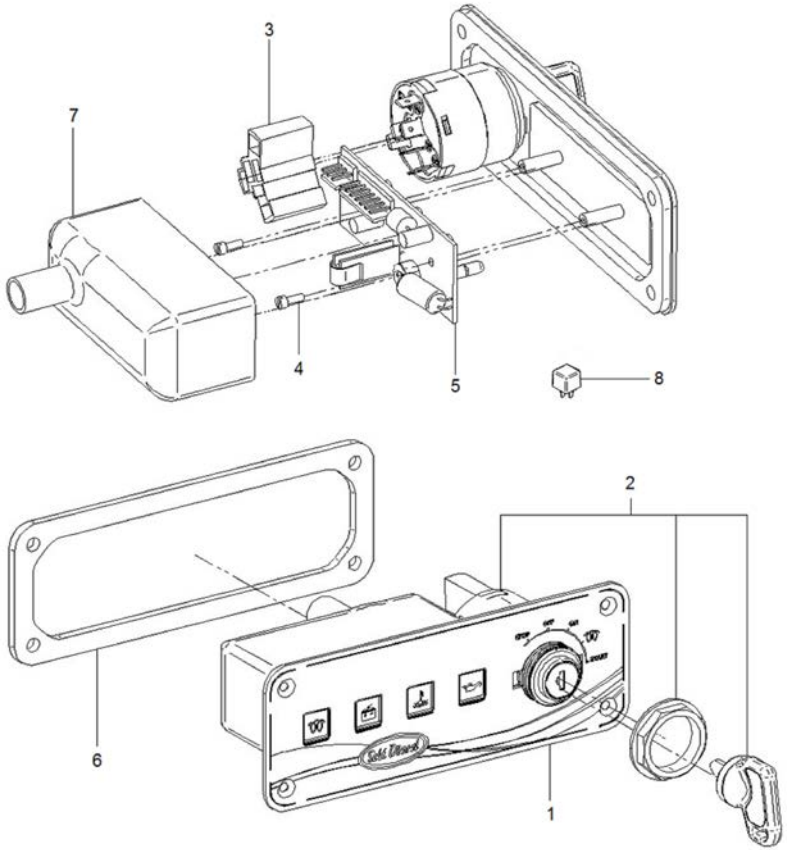

Kits NMEA 2000 - one engine
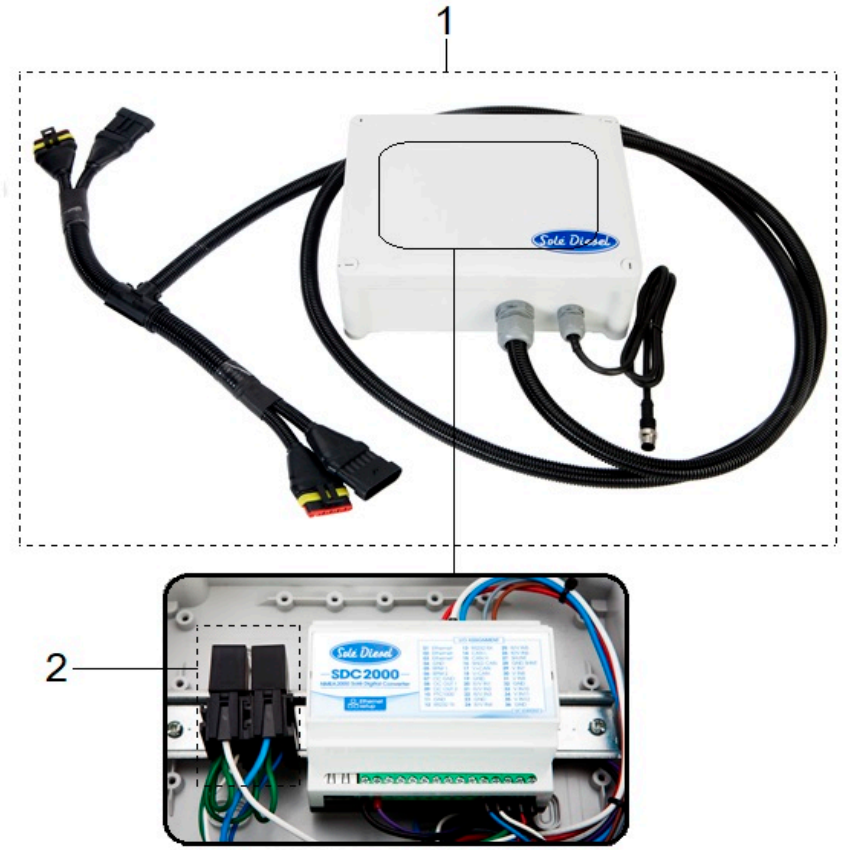
	61438100		Kit SDC 2000 MINI-17/29 12V		
FIG.	**REF.**	**QTY**	**DESCR.**	**FROM**	**UPTO**
1	61400200	1	Kit SDC 2000 24V Standard		
2	60900091	2	MICRO Relay 12V 12-20