Engine Mini-29 v5

VERSION 2017-8

SPARE PARTS MANUAL

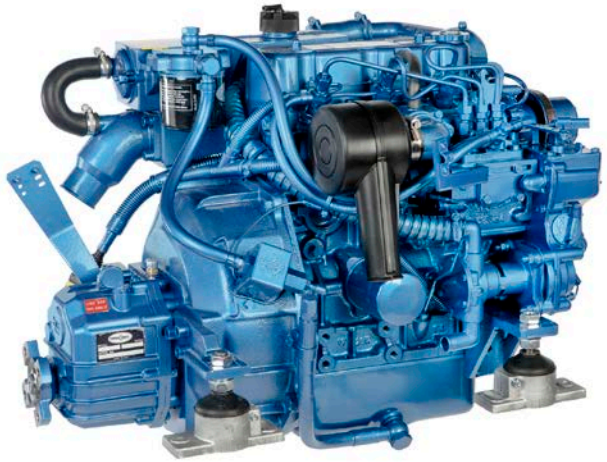

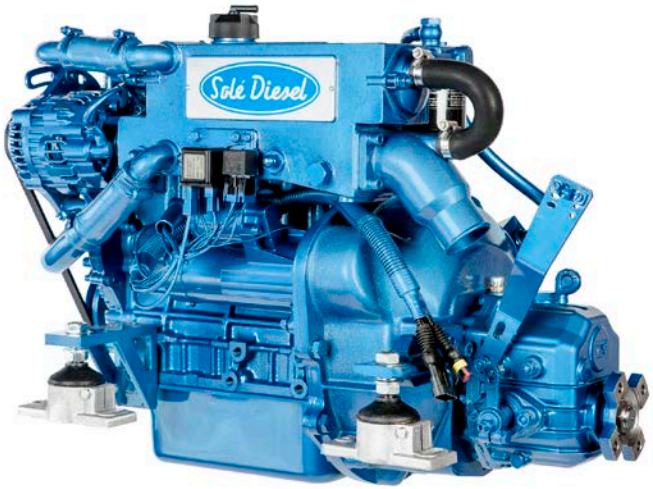

PARTS LIST CATALOGUE

NORMS TO PLACE AN ORDER:

For fast and more efficient service, please specify the following information on spare parts orders that must be preferably done by FAX or e-mail as specified below:

1- Engine model: As shown in identification plate

2- Engine serial number: As shown in identification plate and stamped on crankcase

3- Item description + part number + quantity required

Spare parts requests must be adressed to:

recambios@solediesel.com

Telf.: +34 93 775 44 05

Fax: +34 93 775 30 13

The components shown in the catalog have:

- Figure: Number by which they are represented in scheme
- Description: Trade name of the component
- Quantity: Total number of parts used in the assembly of the part represented (may differ from the total minimum quantities)

Hoses, indicates the total length in meters

The diagrams shown in this catalog of spare parts, have only the purpose to identify the piece in question, its representation is not meaningful and may differ from the actual piece.

In case of doubt, contact Solé Diesel, or your authorized dealer.

The parts i / or references in this catalog are subject to change without notice.

SOLÉ, S.A.

C-243b, Km, 2 - P.O. BOX 15

08760 Martorell (Barcelona) Spain

Download the latest version of this manual HERE

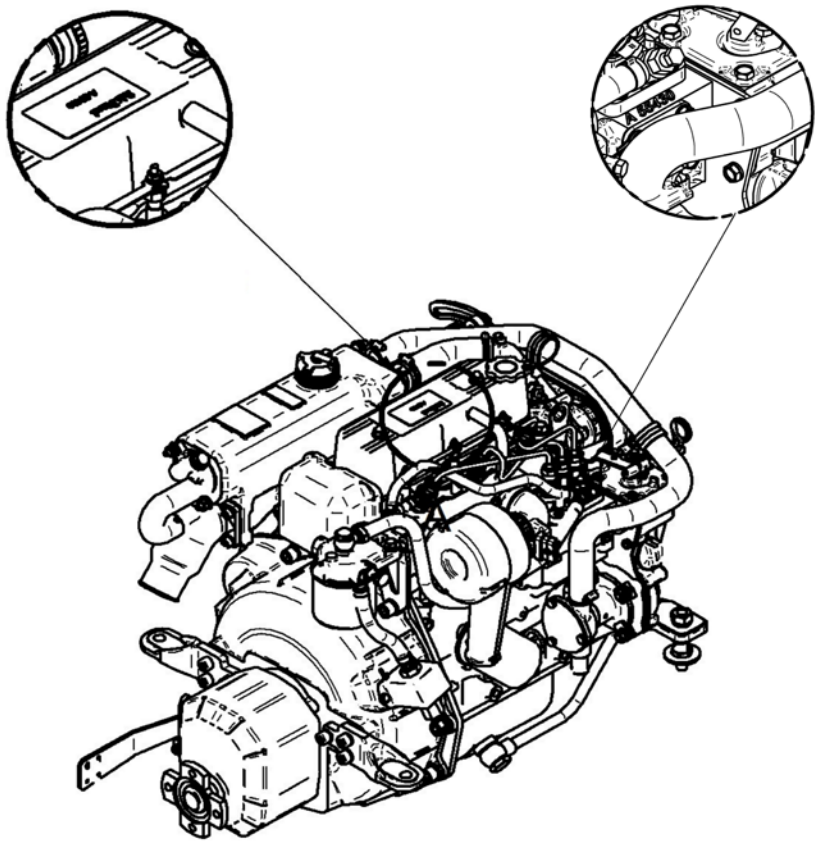

Contents

Engine Body
Cylinder Head
Rocker Cover and Breather
Valve Drive
Timing Parts
Gear Case
Cranckcase
Piston & Connectiong Rod
Crankshaft & Flywheel
Oil System
Oil Pan
Engine Brackets

Inlet & Exhaust
Inlet

Cooling System
Water Pump
Cooler Pipes
Cooler
Body, Water Cooler
Wet Exhaust
1/2" Pump Water, Set
1/2" Pump Water, Set

Fuel System
Fuel Pipe
Injection Nozzle
Fuel Injection Pump
Governor Parts
Fuel Supply Parts

Electrical System
Kit Alternator 14V/75A ISKRA
Starter Assy
Electrical Wiring
Deluxe Instrument Panel
SVT 20 MINI-17/29 Panel
SVT 30 MINI-17/29 Panel

Maintenance Kit
Kit Gasket
Pipe Rubber Set,Water LINE 4 V.
Repair Kit Water Pump 1/2"

Kit Gearbox
Kit S-Drive VOLVO 130S
Kit S-Drive VOLVO 120S
Kit S-Drive VOLVO 100S
Kit S-Drive SD20 YANMAR
Kit GearBox VOLVO MS-2 & MS-2B
Kit GearBox TMC-40P Version 4/5
Kit GearBox RONIM-5
Kit S-Drive VOLVO 110S
Kit S-Drive VOLVO 120SB/120SC/120SE
Kit S-Drive BUKH DV10 & DV20
Kit Bobtail SAE-7
Kit GearBox TM-345/345A
Kit GearBox ZF 15 MIV 4 V.
Kit Bobtail
Kit GearBox TMC-60 MINI-29
Kit S-Drive SELVA
Kit GearBox TMC/ZF/PRM
Kit S-Drive TECHNO.SP60

Instruments Panels
Price Supplement Panel TE3 MINI-17/29
Kit 2nd Panel TE4 MINI-17/29 12V

Electrical System
Kit 2nd Alternator 28V/55A
Kit Alternator 14V/95A ISKRA
Earth Isolated Alternator 14V/95A Kit
Kit 2nd Alternator 14V/90A
Kit Wire Earth Isolated Alternator 14V/7
Kit Water Leak Sensor & Alarm SP60 12V

Other Kits
Motor Bracket Width 185/187
Motor Bracket Width 205
Front Water Pomp MINI-17/29 Kit(Spline)
Boiler Kit (S)
Pression Gauge Kit
Kit Trolling Valve for TM-345/A

Exhaust System
Exhaust Flange (S)
Dry Exhaust SYStem, Elbow (S)
Kit Dry Exh. Flexible Pipe & Silencer(S)

Power Take-off Pulley
Pulley 2B (S)
Pulley 2A (S)

Kit Keel Cooling
Kit Keel Cooling & Dry Exhaust (S)

Instrument panel for engines TE1
TE1 Panel 12V

Kits NMEA 2000 - one engine
Kit SDC 2000 MINI-17/29 12V
Kit SDC 2000 MINI-17/29 24V

Engine Body

D_MIB1_1_1			Cylinder Head		
FIG.	REF.	QTY	DESCR.	FROM	UPTO
1	17610008	2	HANGER,Engine		
2	17621001.4	1	Head Assy,Cylinder		
2A	13520013	1	Cap,SealING		
2B	13821012	3	Cap		
2C	17621002.4	6	Guide Valve		
3	17621004	1	Gasket,Cylinder Head		
4	13821005	8	Bolt,cylinder head		
5	17621013.4	3	Bolt,cylinder head [NP]		
6A	52102256	2	Bolt DIN 933 M8-15 8.8		
6B	53033008	2	Washer GROWER DIN 127-8		
7	17621011.4	1	Plug TAPER		

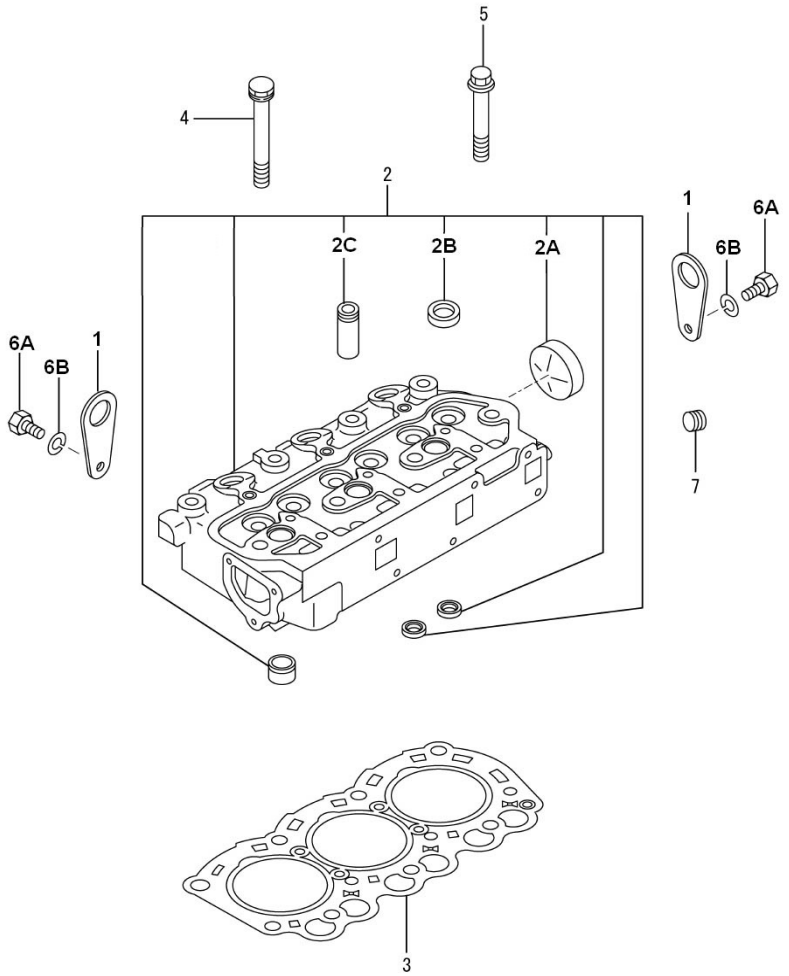

[NP] Not provided

D_MIB1_1_2			Rocker Cover and Breather		
FIG.	REF.	QTY	DESCR.	FROM	UPTO
1	17621009	1	Cover Assy,Rocker		
1A	17621010	1	Rocker Cover Gasket		
3	17621018	2	Nut		
4	51030018	2	Washer DIN 125-18		
6	17621003	1	Cap Oil FILLER		
7	17621006.4	1	Hose BREATHER		

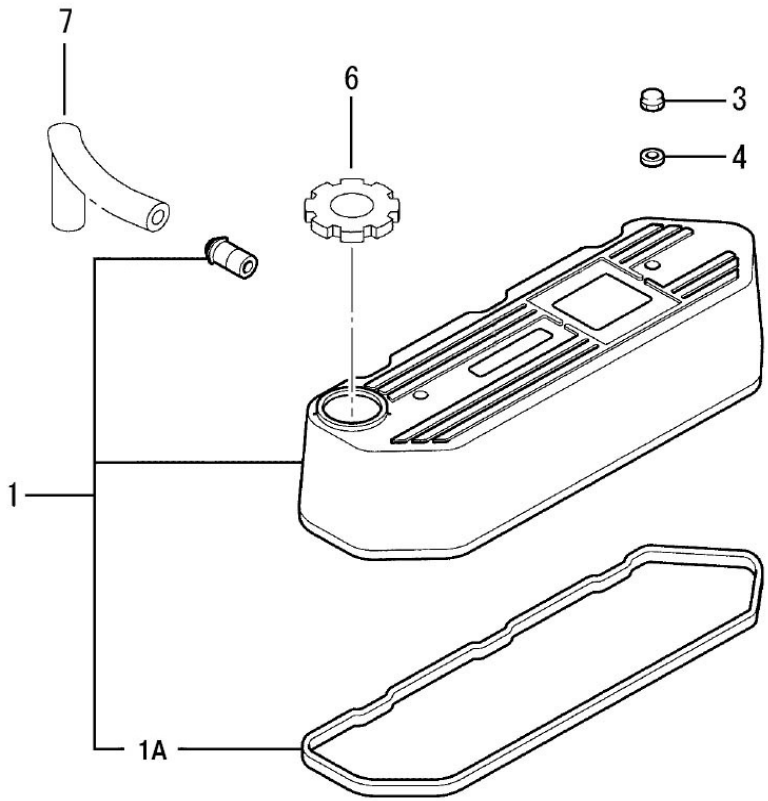

[NP] Not provided

Engine Body

D_MIB1_1_3			Valve Drive		
FIG.	REF.	QTY	DESCR.	FROM	UPTO
1	13822069	6	Cap Stem		
2	(*)	1	Not available [NP]		
2A	17622046	1	Shaft Assy,Rocker		
2B	17622048	3	Bracket,Rocker Shaft		
2C	17622042	3	ARM,Rocker Inlet		
2D	17622045	3	ARM,Rocker Exhaust		
2E	17622070.4	1	Pin GROOVED		
2F	17622047.4	2	Spring Rocker SHAFT		
2G	52120006	6	Nut DIN 934 M6 8.8		
2H	53040012	2	CIRClip DIN 471 E-12		
2I	13822044	6	Screw Adjusting		
3	17622055	3	Intake Valve		
4	17622056	3	Exhaust Valve		
5	13822058	6	Retainer Valve SP		
6	17622059.4	12	LOCK Valve		
7	13222054	6	Seal Valve Stem		
8	17622053	2	Bolt,Rocker STAY		
9	17622061.4	6	Tappet		
10	17622041.4	6	ROD PUSH		
11	52101265	1	Bolt DIN 931 M8-60 8.8		
12	53033008	3	Washer GROWER DIN 127-8		
13	17622051.4	3	Washer		
14	17622057	6	Spring,Valve		

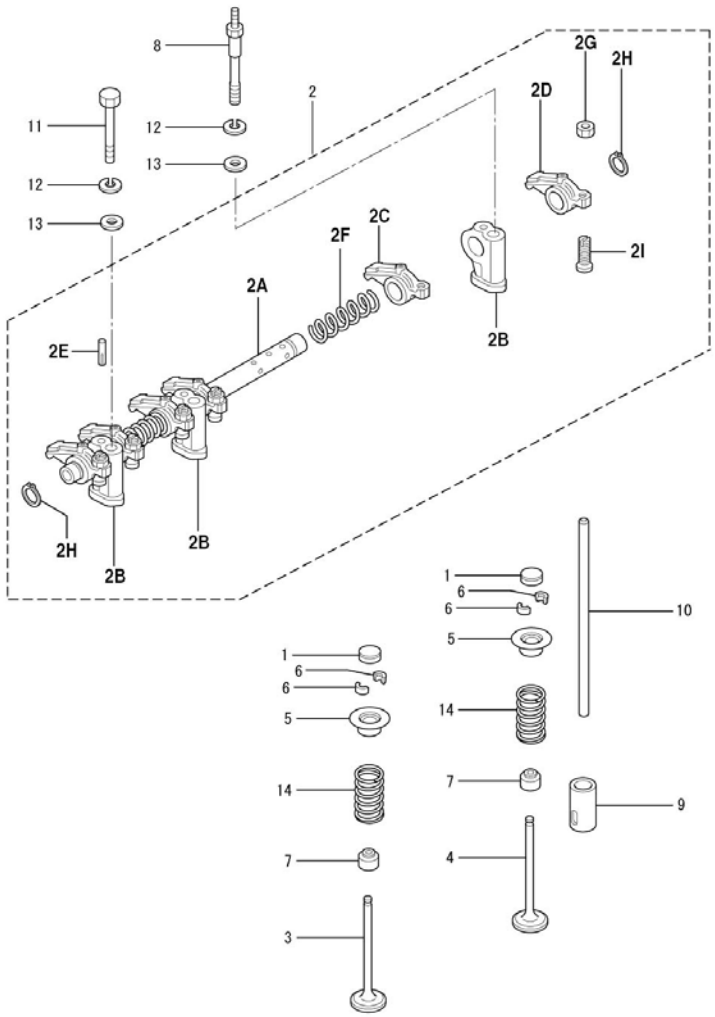

[NP] Not provided

Engine Body

D_MIB2_1_4			Timing Parts		
FIG.	REF.	QTY	DESCR.	FROM	UPTO
1	13822033	1	Washer CamShaft Stop		
2	17622067.4	1	Bearing Ball		
3	17622035	1	CamShaft		
4	17622036.4	1	KEY		
5	53040016	1	CIRClip DIN 471 E-16		
6	17622068.4	1	Bearing Ball		
7	(*)	1	Not available [NP]		
8	17622060.4	1	Key, Sunk		
9	13822066	1	Ball Bearing 6005-C3		
10	13822040.4	1	Shaft Fuel Injection Pump [NP]		
11	13922065G	1	Gear Oil Pump		
12	53040020	1	CIRClip DIN 471 E-20		
13	17622034.4	1	Plate DISTANCE		
14	17622038.4	1	Gear Assy,IDLER Z=40		
15	17622043.4	1	Gear,Fuel INJ.Pump Z=52		
16	52102155	1	Bolt DIN 933 M6-12 8.8		

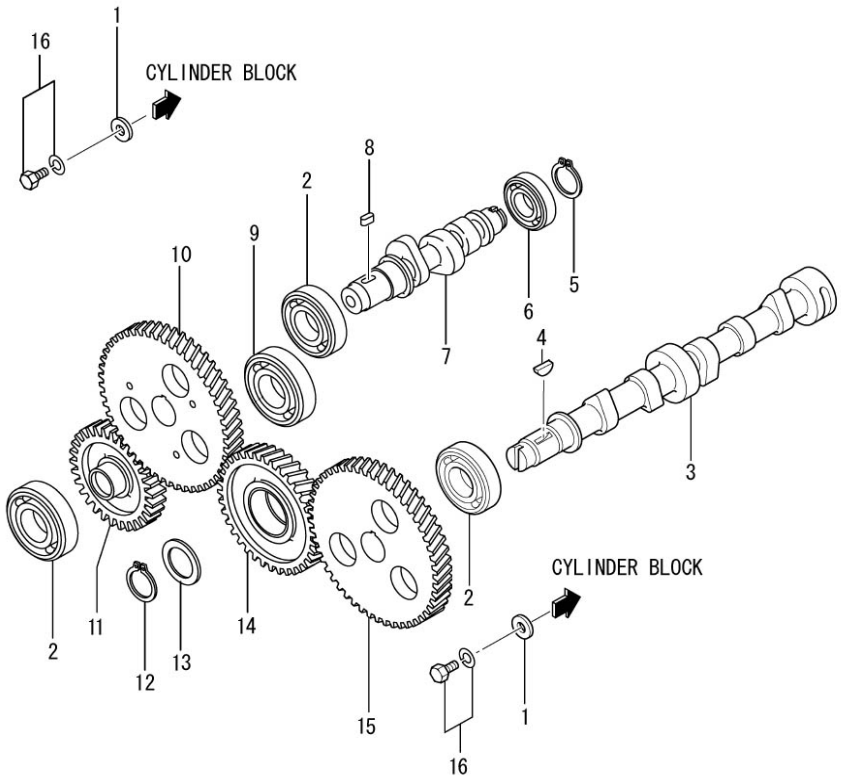

[NP] Not provided

Engine Body

D_MIB1_1_5			Gear Case		
FIG.	REF.	QTY	DESCR.	FROM	UPTO
1	13820045	1	Cap SealING (20)		
2	17620035.4	1	Case Gear		
2A	17621011.4	1	Plug TAPER		
2B	(*)	1	Not available [NP]		
2C	13224045	1	Plug		
2D	17620052.4	1	Housing Oil Pump		
2E	17221043	3	Bolt,W/Washer		
2F	13820013.4	1	Plug		
2G	13120032	1	Washer 18-23-1,5 [NP]		
2H	13224043	1	Plunger		
2I	13824044	1	Spring RELIEF		
2J	13820050	1	Gear Oil Pump INN		
2K	13820051	1	Gear Oil Pump OUT		
3	17620040.4	1	Gasket Gear Case [NP]		
4	13820039	1	Oil Seal		
5	52102160	3	Bolt DIN 933 M6-35 8.8		
6	52102164	4	Bolt DIN 933 M6-55 8.8		
7	52102166	1	Bolt DIN 933 M6-65 8.8 CINCADO		
8A	52102156	4	Bolt DIN 933 M6-16 8.8		
8B	53033006	4	Washer GROWER DIN 127-6		
9	13820044	2	O-Ring D. 11X2,5		
10	13820037	1	Housing Pump Gear		
11	13820038	1	Gasket Housing		
12	17621003.4	1	Cap Oil FILLER		
12B	13721007	1	O-Ring D. 30X3		
14	17122051	1	Bolt, w/washer		
15	13220043	1	Stud L 34		
16	17120049	4	Nut M8		
17	53033008	4	Washer GROWER DIN 127-8		
18	13220042	3	Stud L 54		

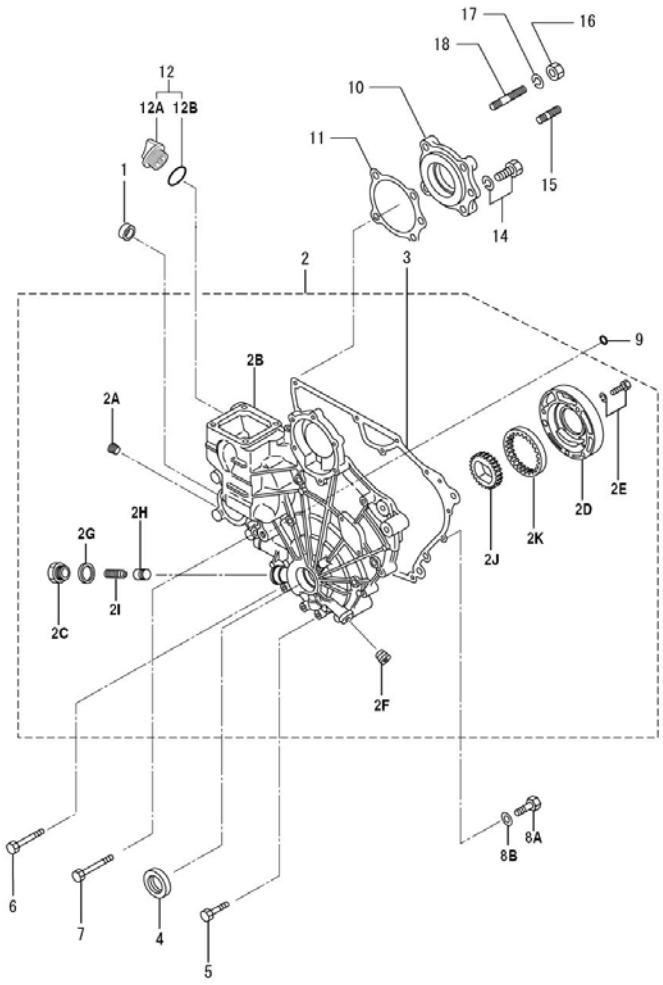

[NP] Not provided

Engine Body

D_MIB2_1_6			Cranckcase		
FIG.	REF.	QTY	DESCR.	FROM	UPTO
1	13820011	1	Cover		
2	17620012.4	1	Gasket Cover		
4A	13820009.1	8	Bolt Bearing Cap		
4B	(*)	2	Not available [NP]		
4D	13220012	2	Cap Sealing		
4E	13520013	3	Cap,SealING		
5	17620013.4	3	Plug Taper 1/16		
6	17620036.4	2	Pin Dowel		
7	17620014.4	1	Shaft IDLER		
8	17620007.4	1	Guide		
9	17620020.4	1	Pin		
10	13820013	1	Plug Expansion		
11	17620009.4	2	Bushing		
12	17620021.4	1	Bushing		
13	17620022.4	2	BUSHING,KNOCK		
14	17620010.4	3	Bushing		
15	17620023.4	1	Plug TAPER		
16	13820002	4	Seal Side		
17	17620016.4	1	Gasket Oil Seal C		
18	13822060.4	1	Key, Sunk		
19	17620018.4	1	Gasket Front Plate [NP]		
20	17620016.4	1	Gasket Oil Seal C		
21	13820008	1	Seal Oil		
22	17624047.4	1	Shaft Oil Filter		
23	17620024.4	1	Plug TAPER		
24	52102157	6	Bolt DIN 933 M6-20 8.8		
25	13322074	7	Bolt DIN 933 M6-16 8.8 [NP]		
26	13827012	1	Bolt		
29	13920003	1	Bearing Set CRANK STD.		
30	13920004	1	Bearing Set CRANK +0,25		
31	13920005	1	Bearing Set CRANK		

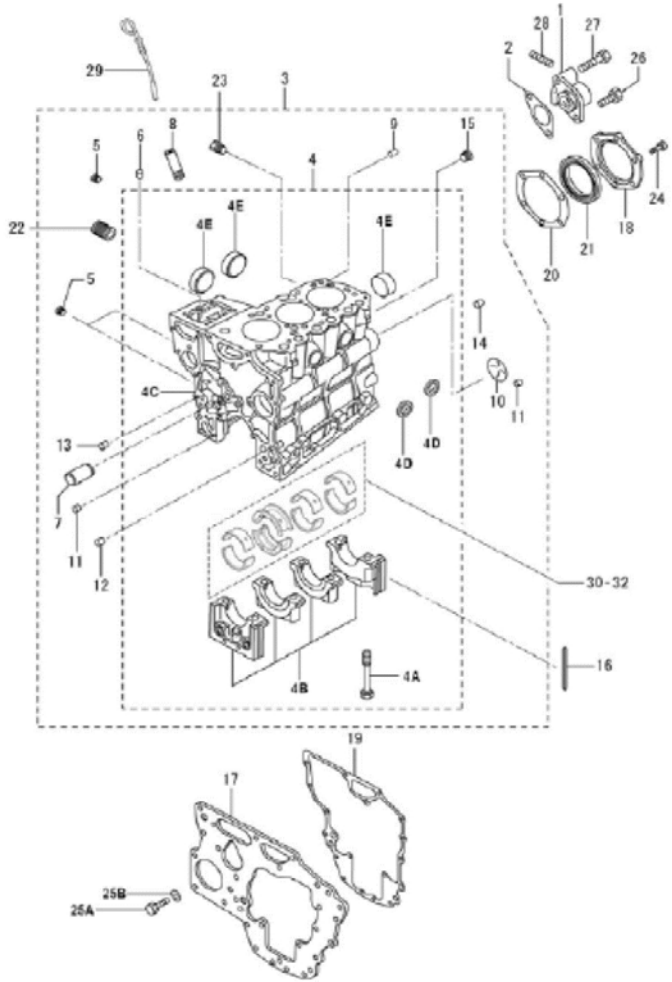

[NP] Not provided

Engine Body

D_MIB1_1_8			Piston & Connectiong Rod		
FIG.	REF.	QTY	DESCR.	FROM	UPTO
1	17622001	3	Piston &Pin Set		
2	17622002	3	Piston & Pin Set		
3	17622003	3	Piston & Pin Set		
4	17622006	3	Ring Set,Piston STD.		
5	17622007	3	Ring Set,Piston O.S. 0.25		
6	17622008	3	Ring Set,Piston O.S. 0.50		
7	17622012.4	3	ROD Assy		
7A	(*)	6	Not available [NP]		
7C	13222011	6	Nut,connecting rod		
7D	13222013	6	Bolt,connecting rod		
8	13822014	3	Bearing Set,CON-ROD STD.		
9	13822015	3	Bearing Set,Con-Rod U.S. 0.25		
10	13822016	3	Bearing Set,Con-Rod U.S. 0.50		

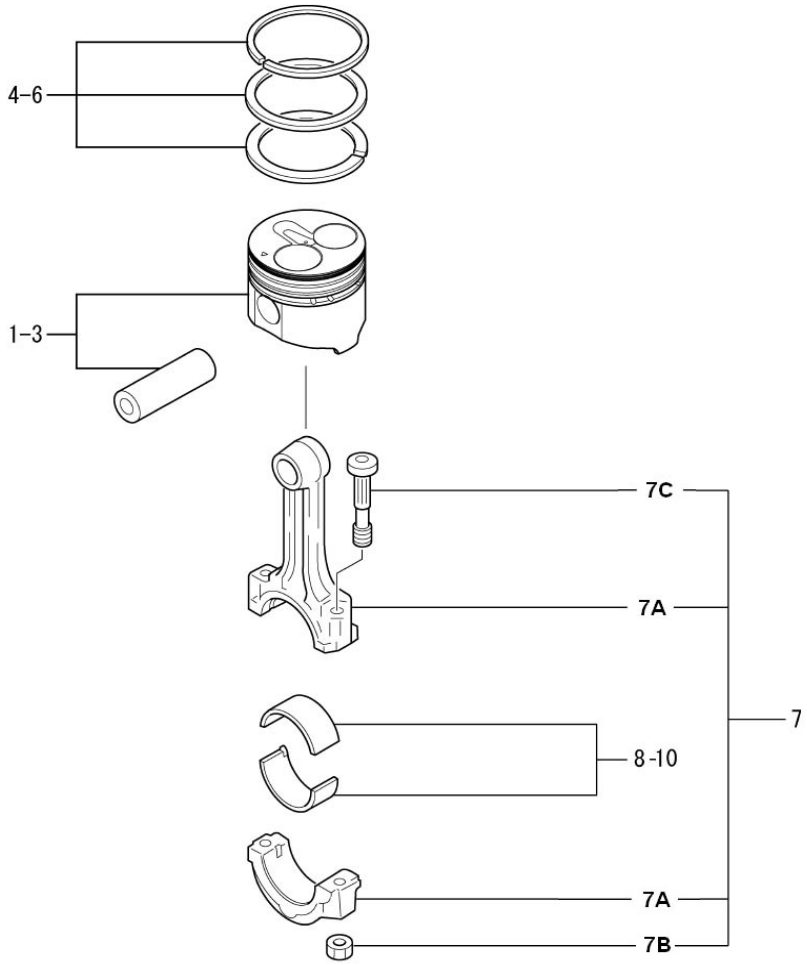

[NP] Not provided

Engine Body

D_MIB1_1_9			Crankshaft & Flywheel		
FIG.	REF.	QTY	DESCR.	FROM	UPTO
1	13922019	1	CrankShaft (up to eng.nº 31854)		
2	17622024.4	1	Pulley CrankShaft		
3	17622021.4	1	Gear CrankShaft Z=26		
4	13822026	1	Nut		
5	51030016	1	Washer DIN 125-16		
6	53033016C	1	Washer		
7	17622036.4	2	KEY		
8	17622027.4	1	Flywheel Assy		
8A	(*)	1	Not available [NP]		
8B	17622029.4	1	Gear Ring Z=106 [NP]		
9	13822031.4	4	Bolt Flywheel		

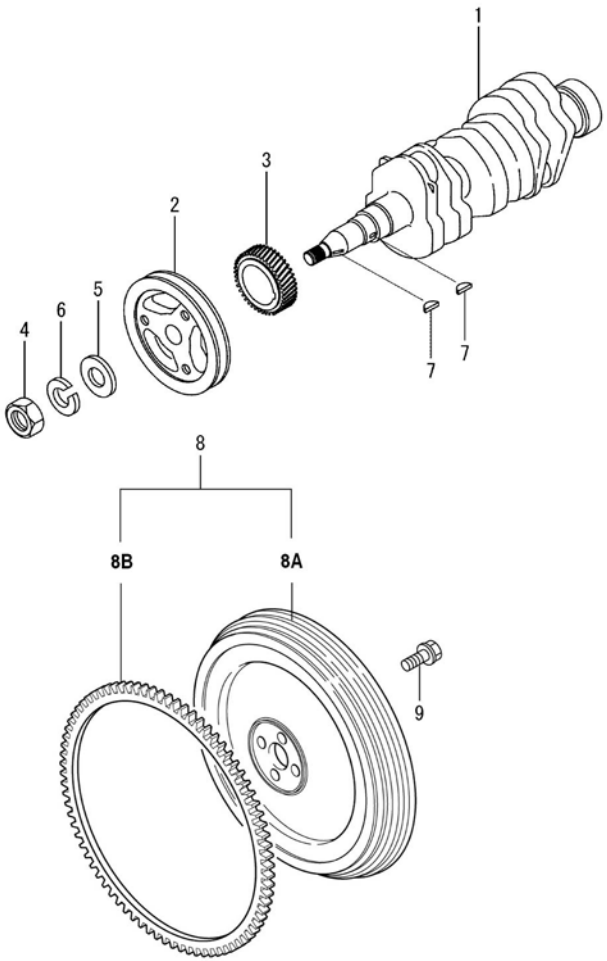

[NP] Not provided

Engine Body

D_MIB1_1_10			Oil System		
FIG.	REF.	QTY	DESCR.	FROM	UPTO
1	13124051	1	Filter Oil Element		
2	17624060.4	1	SWITCH Assy		
3	51221014	1	Nut DIN 936 M14X1,5 5.6 ZINC		
4	13824052	1	SCREEN Assy Oil		

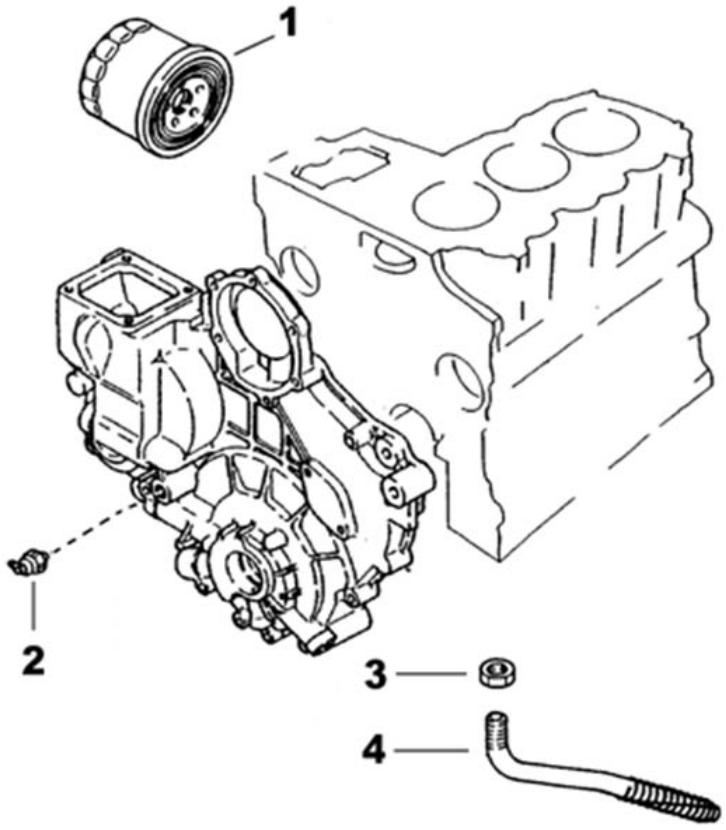

Engine Body

D_MIB1_1_11			Oil Pan		
FIG.	REF.	QTY	DESCR.	FROM	UPTO
1	13920030	1	PAN Assy,Oil		
2	17620033.4	1	Gasket Oil PAN		
3A	52102155	18	Bolt DIN 933 M6-12 8.8		
3B	53033006	18	Washer GROWER DIN 127-6		
4	17214022	1	Bracket, Pipe		
5	53203358	1	Bolt DIN 912 M12-1,25-25 12.9		
6	51030012	1	Washer DIN 125-12		
7	13814021REC	1	ExtraCTION,Hose		
7A	13814021	1	ExtraCTION, hose [NP]		
7B	16514020	1	Plug		
7C	16514022	1	Coupling,screw		
7D	56000077	2	Washer 18-23-1,5		
7E	56000217	1	Washer 13-20-3		
8	14714001	1	Pump,oil Suction		

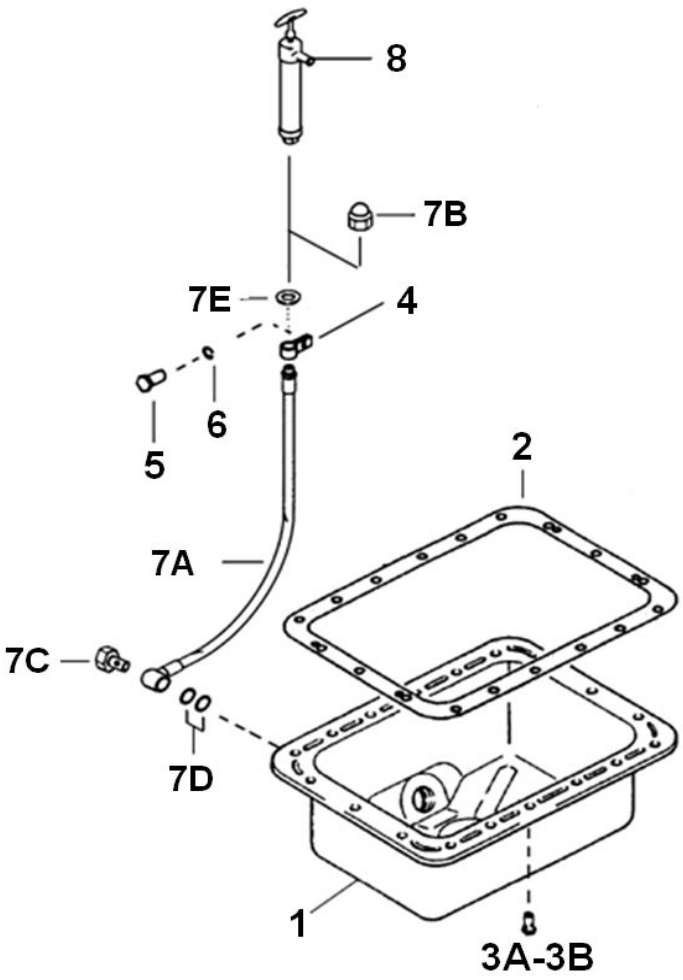

[NP] Not provided

D_MIB1_1_12			Engine Brackets		
FIG.	REF.	QTY	DESCR.	FROM	UPTO
1	13810001.1	1	Bracket Front, Left	08/07/2014	
2	53033010	4	Washer GROWER DIN 127-10		
3	52203308	4	Bolt DIN 912 M10-1,25-25 12.9		
4	13810002.1	1	RIGHT, front bracket	08/07/2014	
5	61631100	4	Anti Vibration Mount Type A 50SHA		

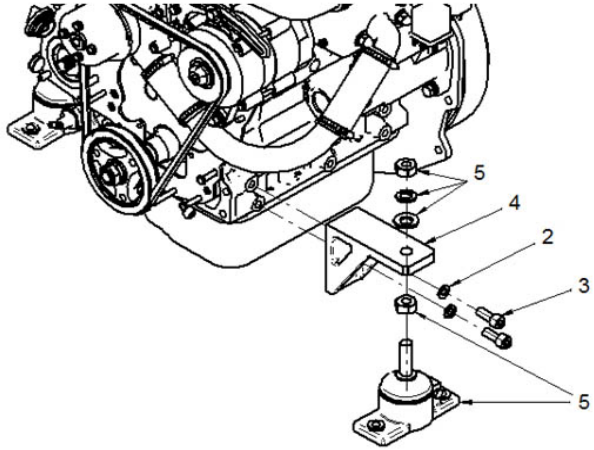

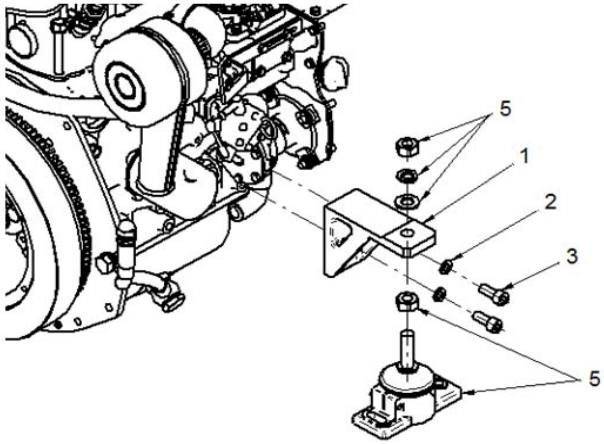

Inlet & Exhaust

D_MIB1_2_1			Inlet		
FIG.	REF.	QTY	DESCR.	FROM	UPTO
1	15119015	1	CABLE Holder Ball		
2	14419023	1	Ball JOINT		
3	53033006	1	Washer GROWER DIN 127-6		
4	52120006	1	Nut DIN 934 M6 8.8		
5	13819006	1	Bracket, Engine Control		
6	52102156	2	Bolt DIN 933 M6-16 8.8		
7	51030006	2	Washer DIN 125-6		
8	55307104	2	Bolt DIN 86 W3/16-10		
9	14719013	1	Clamp,cable		
10	17610020	1	BEND		
11	17610012	1	Air Filter Assy without filter element		14/02/2017
11	13810074	1	Filter Air Complete	15/02/2017	
12	17621030	1	Cover Assy Intake		
12A	17621017	1	Pipe		
13	17621032	1	Gasket Intake COV		
14	52102157	4	Bolt DIN 933 M6-20 8.8		
15	52101162	2	Bolt DIN 931 M6-45 8.8		
16	17621042	1	Gasket		

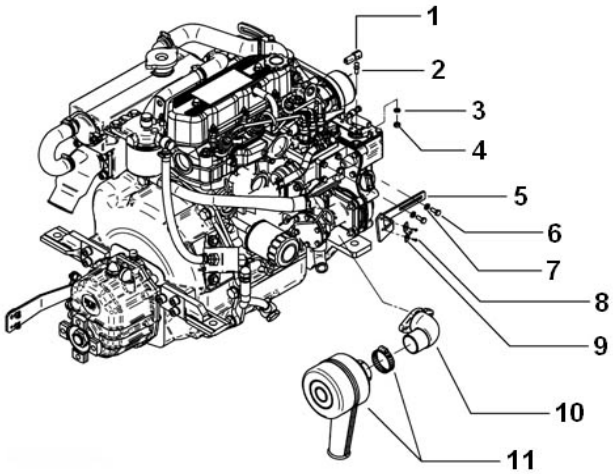

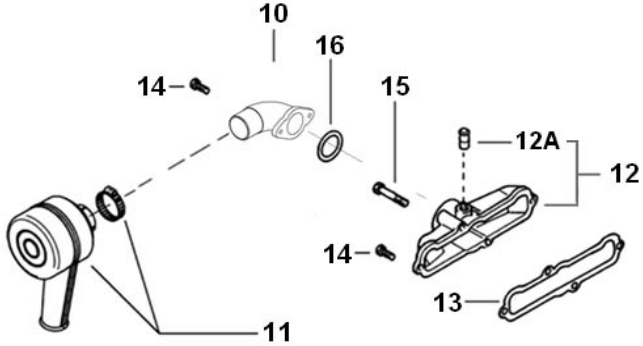

Cooling System

D_MIB1_3_1			Water Pump		
FIG.	REF.	QTY	DESCR.	FROM	UPTO
2	13921021	1	Pulley Water Pump		
3A	52102155	4	Bolt DIN 933 M6-12 8.8		
4	13821020	1	Pump Assy Water		
5	17621022.4	1	Gasket Water Pump		
6	52102157	2	Bolt DIN 933 M6-20 8.8		
7	52102160	1	Bolt DIN 933 M6-35 8.8		
8	52101162	1	Bolt DIN 931 M6-45 8.8		
9	52102164	2	Bolt DIN 933 M6-55 8.8		
11	13821027	1	Thermostat 71º		
13	13821031	1	Gasket Water OutL		
14	17621037.4	1	FITTING Thermostat New [NP]		
15	17621033.4	1	Gasket Thermostat		
16	52102158	2	Bolt DIN 933 M6-25 8.8		
17	52101165	1	Bolt DIN 931 M6-60 8.8		
18	17621026.4	1	Pipe BYPASS		
19	13821038	2	O-Ring D. 9X2		
20	56000073	2	Copper Washer 16-23-1,5		
21	60900070	1	Thermo-Switch 97ºC		
22	60900980	1	Temperature Sensor		
24	13811020.1	1	Cover		
25	53033006	6	Washer GROWER DIN 127-6		
26	17621039	1	Bolt		
27	52101163	1	Bolt DIN 931 M6-50 8.8		

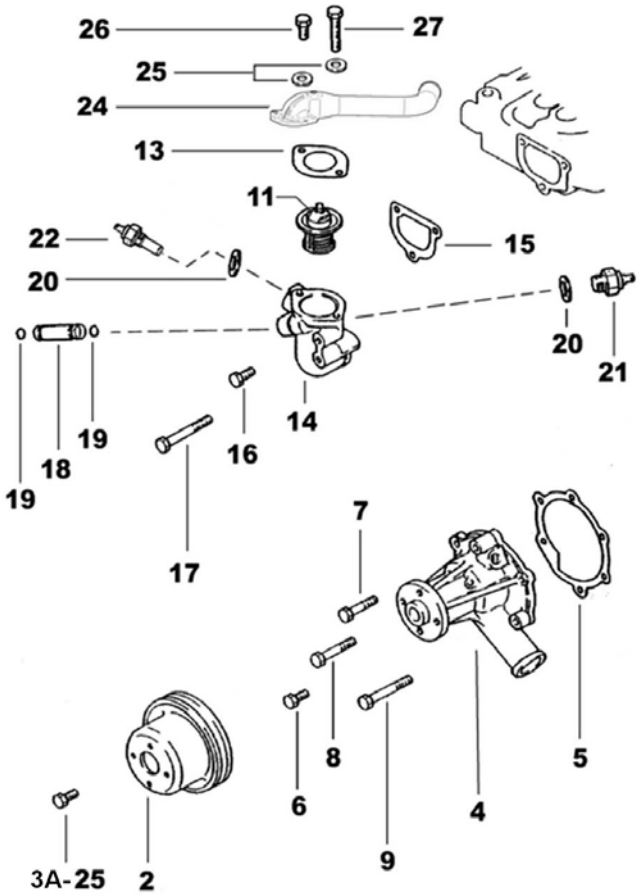

[NP] Not provided

Cooling System

D_MIB1_3_4			Cooler Pipes		
FIG.	REF.	QTY	DESCR.	FROM	UPTO
1	M87501927	0,75	Water Intake Hose (HQ) D. 19-27		
2	54081020	3	Clamp DIN 3017 20-32/9 W4		
3	13211031	1	Raccord 1/2"		
4	17120049	4	Nut M8		
5A	51030008	4	Washer DIN 125-8		
5B	53033008	4	Washer GROWER DIN 127-8		
6	13811062	4	Pump Bracket		
7	33811000	1	1/2" Pump Water, Set [NP]		22/05/2017
7	37611000	1	1/2" Pump Water, Set	22/05/2017	
8	52101163	1	Bolt DIN 931 M6-50 8.8		
9	53033006	2	Washer GROWER DIN 127-6		
10	13811020.1	1	Cover		
11	13821031	1	Gasket Water OutL		
12	54081025	6	Clamp DIN 3017 25-40/9 W4		
13	13811017	1	Pipe 28-38-80		
14	13811014	1	Elbow		
15	17611002	1	Pipe 28-38-110		
16	17011007	1	O-Ring D. 57X3		
17	17611000.1	1	Cooler		
18	13811018	1	MANIFOld,mounting stud		
19	56000057	1	Washer 8-13-1,5		
20	55122008	1	Nut DIN 1587 M8		
21	17613015	1	Elbow,WET Exhaust		
22	17611034	1	Hose		
23	17621035	1	Gasket, Exhaust		
24	14711008	3	Stud,cover		
25	13211035	1	Exhaust Manifold Outlet Bend		
26	53038008	3	Washer DIN 6798-A 8		
27	54120008	3	Nut DIN 934 M8		

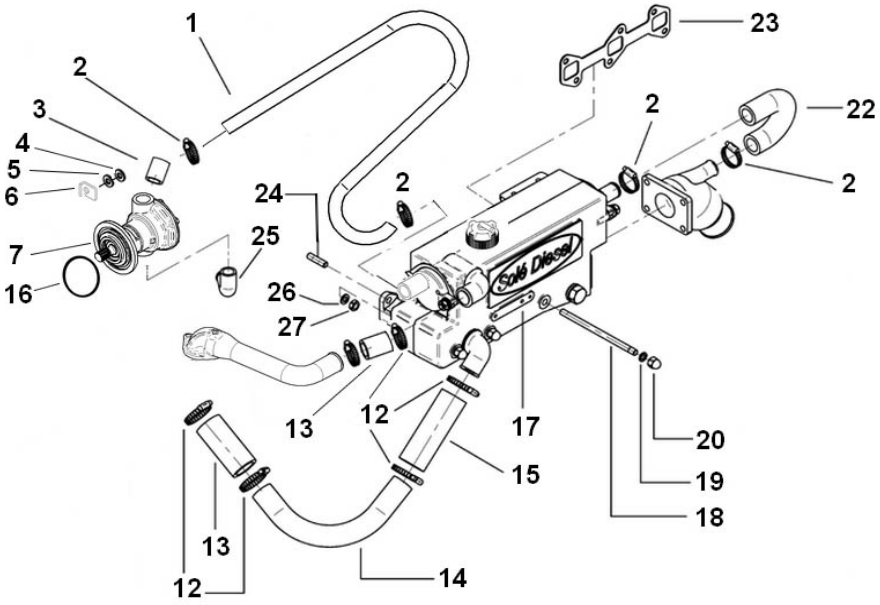

[NP] Not provided

Cooling System

17611000.1			Cooler		
FIG.	REF.	QTY	DESCR.	FROM	UPTO
1	17611001	1	Body, Water Cooler [NP]	13/06/2015	
2	13811010	1	Cap		
3	13211031	2	Raccord 1/2"		
4	13811002	2	Cover, water cooler		
5	13811007	2	O-Ring D. 57X2,5		
6	13311006	4	Stud,cover		
7	51030008	4	Washer DIN 125-8		
8	53033008	4	Washer GROWER DIN 127-8		
9	54120008	4	Nut DIN 934 M8		
10	17211004	1	Element,Water Cooler		
11	12113092	1	Plug		
12	56000073	1	Copper Washer 16-23-1,5		
13	12111076	1	Plug		

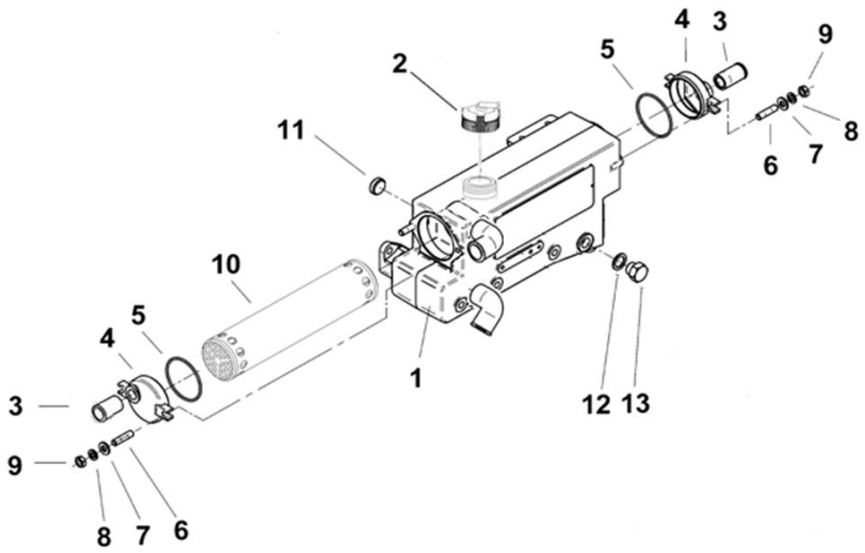

[NP] Not provided

Cooling System

17611001C			Body, Water Cooler		
FIG.	REF.	QTY	DESCR.	FROM	UPTO
1	17611001	1	Body, Water Cooler [NP]	13/06/2015	
2	13811010	1	Cap		
3	12113092	1	Plug		
4	56000073	1	Copper Washer 16-23-1,5		
5	12111076	1	Plug		
6	17111060	1	Plate "SOLE Diesel" [NP]		
7	17111062	2	Bolt		

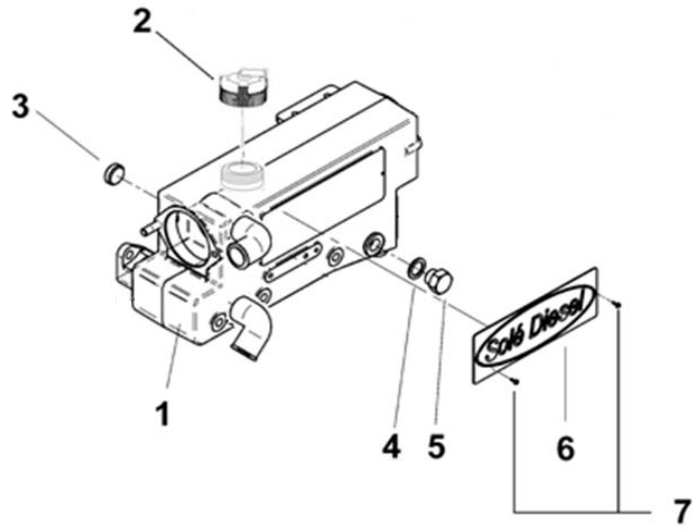

[NP] Not provided

D_MIB1_3_5			Wet Exhaust		
FIG.	REF.	QTY	DESCR.	FROM	UPTO
1	17613015	1	Elbow,WET Exhaust		
2	17613014	1	Gasket		
3	52103257	4	Bolt DIN 912 M8-20 8.8		
4	53033008	4	Washer GROWER DIN 127-8		

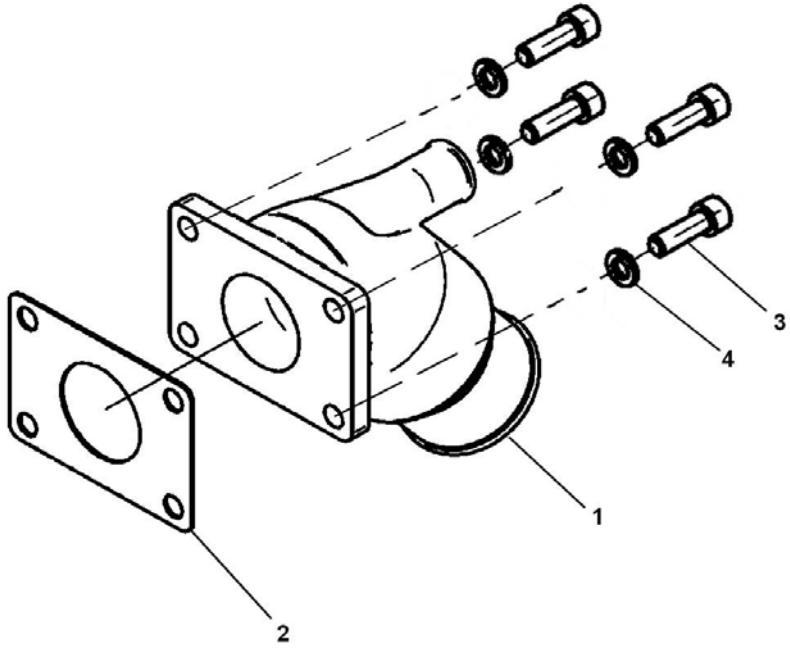

Cooling System

	33811000		1/2" Pump Water, Set		
FIG.	REF.	QTY	DESCR.	FROM	UPTO
1	54102104	6	Bolt DIN 933 M5-10 INOX.		
2	31211002	1	Cover Pump		
3	31211008	1	1/2" Impeller		
5	31211003	1	Gasket Cover		
6	55307105	1	Bolt DIN 86 W3/16-13		
7	31211005	1	Cam		
8	33411026	1	Wearplate		
9	33811010	1	Shaft,Water Pump		
10	33811015	1	Spacer		
11	53041032	1	CIRClip DIN 472 I-32		
12	33411014	2	Ball Bearing 6002-C3		
13	33411020	1	Seal		
14	33311013	1	O-Ring D. 15X2		
15	33411019	1	Seal		
17	33811001	1	Body,Water Pump		
18	33411017	1	Pin,Dowel		

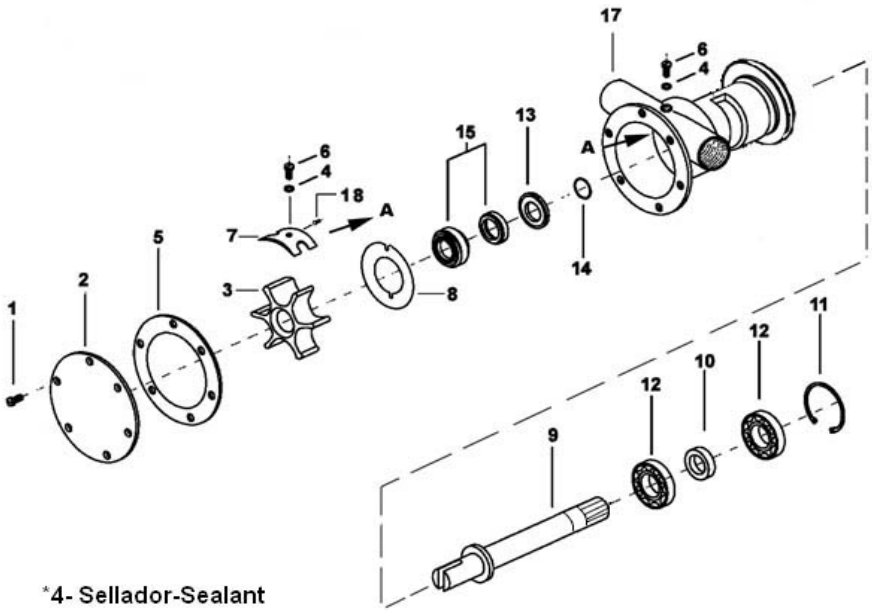

*4- Sellador-Sealant

Cooling System

	37611000		1/2" Pump Water, Set		
FIG.	**REF.**	**QTY**	**DESCR.**	**FROM**	**UPTO**
1	54102154	3	Bolt DIN 933 M6-10 INOX		
2	37611002	1	Cover Pump		
3	37611003	1	O-Ring D. 57x1,5		
4	31211008	1	1/2" Impeller		
5	37611026	1	Plate, Friction		
6	33811010	1	Shaft,Water Pump		
7	33411019	1	Seal		
8	33311013	1	O-Ring D. 15X2		
9	37611001	1	Body, Water Pump 1/2"		
10	33411020	1	Seal		
11	33411014	2	Ball Bearing 6002-C3		
12	33811015	1	Spacer		
13	53041032	1	CIRClip DIN 472 I-32		

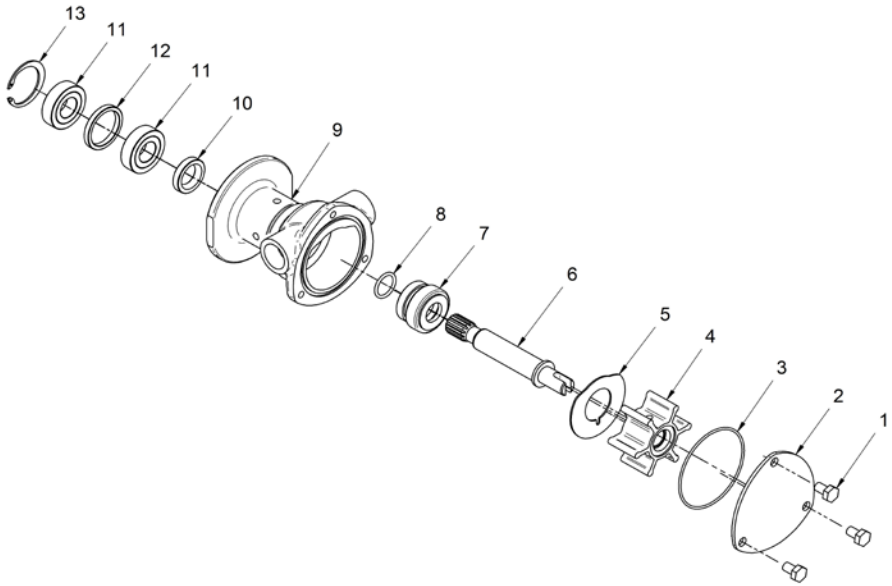

D_MIB1_4_1			Fuel Pipe		
FIG.	REF.	QTY	DESCR.	FROM	UPTO
1	17624015.4	1	Pipe Injection N.1		
2	17624016.4	1	Pipe Injection N.2		
3	17624019.4	1	Pipe Injection N.3		
4	17624024.4	3	Nut		
5	13924026	1	Tube Gas-Oil SPILL		
6	13824025	3	Injector Gasket		
7	13824013	3	Injector Washer		
8A	52102157	4	Bolt DIN 933 M6-20 8.8		
8B	53033006	4	Washer GROWER DIN 127-6		
9	17624005.4	0	Shim Adjusting T=0,2MM. [NP] [VAR]		
10	17624003.4	0	Shim Adjusting T=0,3MM. [NP] [VAR]		
11	17624004.4	0	Shim Adjusting T=0,3MM. [VAR]		
12	17624006.4	0	Shim Adjusting T=0,4MM. [VAR]		
13	17624007.4	0	Shim Adjusting T=0,6MM. [VAR]		
14	17624008.4	0	Shim Adjusting T=0,7MM. [NP] [VAR]		
15	17624009.4	0	Shim Adjusting T=0,8MM. [VAR]		
16	17624010.4	0	Shim Adjusting T=0,9MM. [VAR]		
17	17624011.4	0	Shim Adjusting T=1,0MM. [NP] [VAR]		

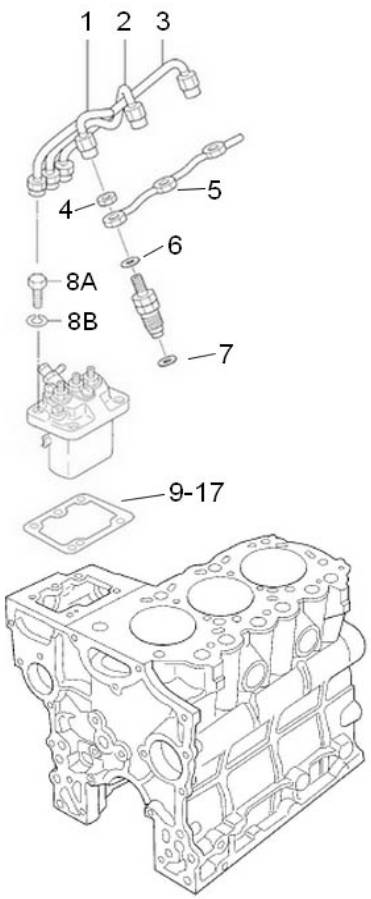

[NP] Not provided

[VAR] Variable according to repair

D_MIB1_4_2			Injection Nozzle		
FIG.	REF.	QTY	DESCR.	FROM	UPTO
1	17626001	3	Nozzle & Holder A		
1A	(*)	3	Not available [NP]		
1BA	13826010	0	Washer 1,25 [VAR]		
1BB	13826011	0	Washer 1,30 [VAR]		
1BC	13826012	0	Washer 1,35 [VAR]		
1BD	13826013	0	Washer 1,40 [VAR]		
1BE	13826014	0	Washer 1,45 [VAR]		
1BF	13826015	0	Washer 1,50 [VAR]		
1BG	13826016	0	Washer 1,55 [VAR]		
1BH	13826017	0	Washer 1,60 [VAR]		
1BI	13826019	0	Washer 1,65 [VAR]		
1BJ	13826020	0	Washer 1,70 [VAR]		
1C	17126004	3	Spring, pressure		
1D	13826003	3	Pin Pressure		
1E	13826007	3	PIECE DISTANCE		
1F	17626018	3	Nozzle Assy		
1G	17226006	3	Nut, Nozzle RETAINING		

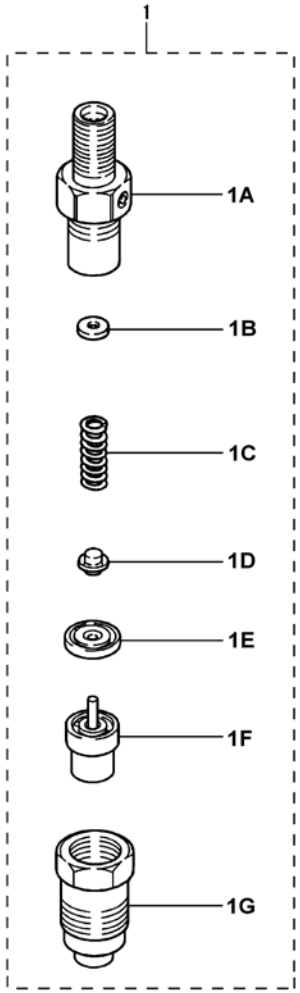

[NP] Not provided

[VAR] Variable according to repair

D_MIB2_4_3			Fuel Injection Pump		
FIG.	REF.	QTY	DESCR.	FROM	UPTO
1	13925005	1	Housing SUB Assy		
2	17625004.4	3	Holder		
3	17625033.4	3	O-Ring		
4	13925002G	3	Spring [NP]		
5	13925007G	3	Gasket DELIVERY V [NP]		
6	17625008.4	3	Valve SUB Assy		
7	13925009G	3	Element SUB Assy [NP]		
8	13825010	3	SLEEVE SUB Assy		
9	13925011G	3	Seat [NP]		
0	17625001.4	1	Pump Assy,Fuel Injection		
10	13925012G	3	Spring [NP]		
11	13925013G	3	Seat [NP]		
12A	13925015G	3	Plate Tappet Shim 1,85		
12B	13825016G	3	Plate Tappet Shim 1,90		
12C	13925017G	3	Plate Tappet Shim 1,95		
12D	13925018G	3	Plate Tappet Shim 2,00		
12E	13925019G	3	Plate Tappet Shim 2,05		
12F	13925020G	3	Plate Tappet Shim 2,10		
12G	13925021G	3	Plate Tappet Shim 2,15		
12H	13925022G	3	Plate Tappet Shim 2,20		
12I	13925023G	3	Plate Tappet Shim 2,25		
12J	13925024G	3	Plate Tappet Shim 2,30		
12K	13925025G	3	Plate Tappet Shim 2,35		
12L	13925026G	3	Plate Tappet Shim 2,40		
12M	13925027G	3	Plate Tappet Shim 2,45		
12N	13925028G	3	Plate Tappet Shim 2,50		
13	13925029G	3	TAPPET Assy [NP]		
14	13825026	1	Screw Air		
15	13925031G	1	Washer,DRAIN Screw [NP]		
16	13825027	1	Screw HOLLOW		
17	17325029.3	1	Nipple Swivel		
18	13825025.3	2	Washer [NP]		
19	13925030G	3	Plate Set [NP]		
20	13925032G	3	Screw,W/Washer [NP]		
21	17625006.4	1	RACK Assy Control		

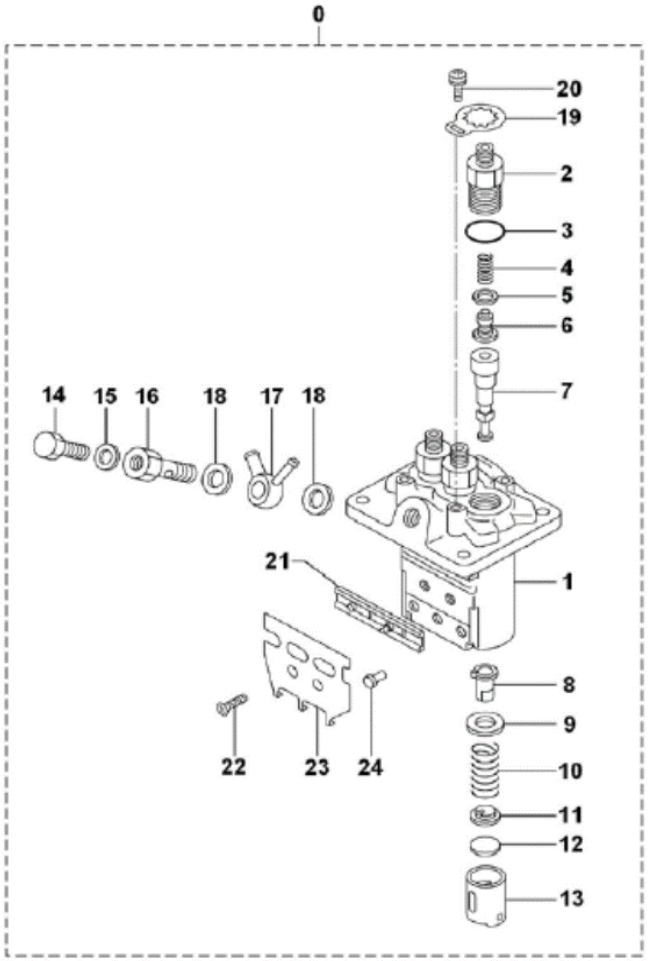

[NP] Not provided

D_MIB2_4_3			Fuel Injection Pump		
FIG.	REF.	QTY	DESCR.	FROM	UPTO
22	13825062	2	Screw		
23	13925063	1	Bracket Stop Wire		
24	13925034G	3	Pin Tappet Guide [NP]		

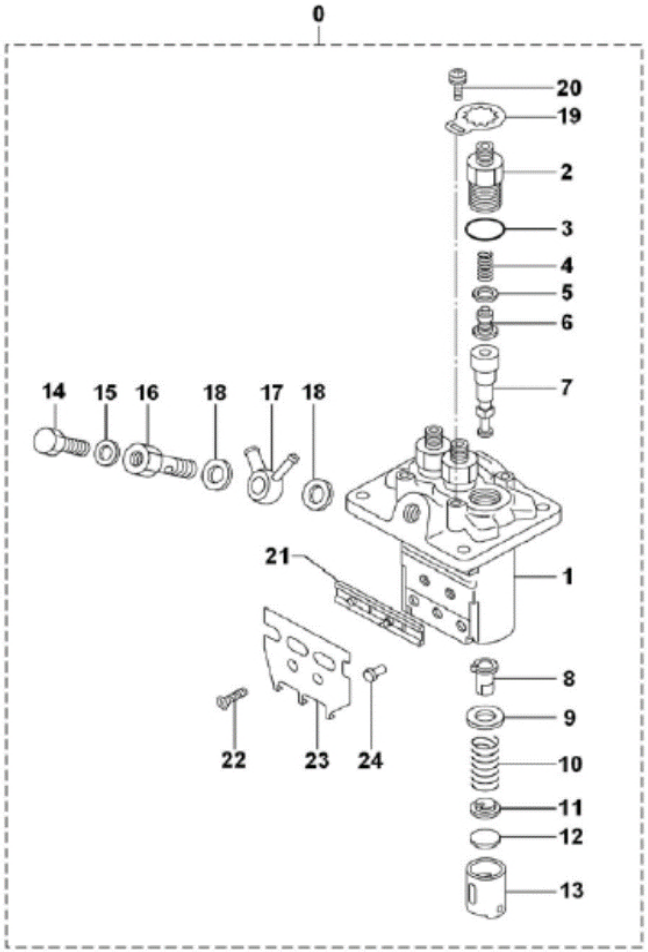

D_MIB1_4_4			Governor Parts		
FIG.	REF.	QTY	DESCR.	FROM	UPTO
1	17623020.4	1	Metal,Fuel		
2	17623019.4	1	Wire		
3	13123017	1	Bolt High Speed		
4	17223017.4	1	Bolt		
5	17623005.4	1	Stopper		
6	13823001	1	WEIGHT Assy,GOverNOR		
7	60530009	1	Shaft Assy,sliding		
8	17623014.4	1	Gasket Tie Rod CO		
9	13923005	1	ROD TIE		
10	13923006	1	Spring,TIE ROD		
11	17623032.4	1	Cover,Governor		
12	17623033.4	1	Gasket Governor Cover [NP]		
13	13823042	1	Cap TORQUE Set SE		
14	17623043.4	1	Cover TIE ROD		
15	13823015	1	Spring GOverNOR		
16	(*)	1	Not available [NP]		
16A	17223035	1	Nut		
16B	13823034	1	RACK Set Screw (new)		
17	17623003.4	1	Lever Assy Governor		
18	13823007	1	Lever Assy TENSIO		
19	17623006.4	1	Shaft Governor		
20	13823044	1	Spring TIE ROD		
21	17623008.4	1	Lever Assy SPEED		
22	13823027	1	Lever Governor SP		
23	13823036	1	Spring START		
24	17623009.4	2	Pin GROOVED		
25	52102155	4	Bolt DIN 933 M6-12 8.8		
26	13223016	2	Bolt		
27	52102156	4	Bolt DIN 933 M6-16 8.8		
28	13823011	1	Bolt,W/Washer		
29	17223032	2	Nut		
30	17223030	1	Nut		
31	53033008	1	Washer GROWER DIN 127-8		
32	13123021	1	O-Ring D. 7X1.8		
33	17623045.4	1	Cover,Governor Shaft		

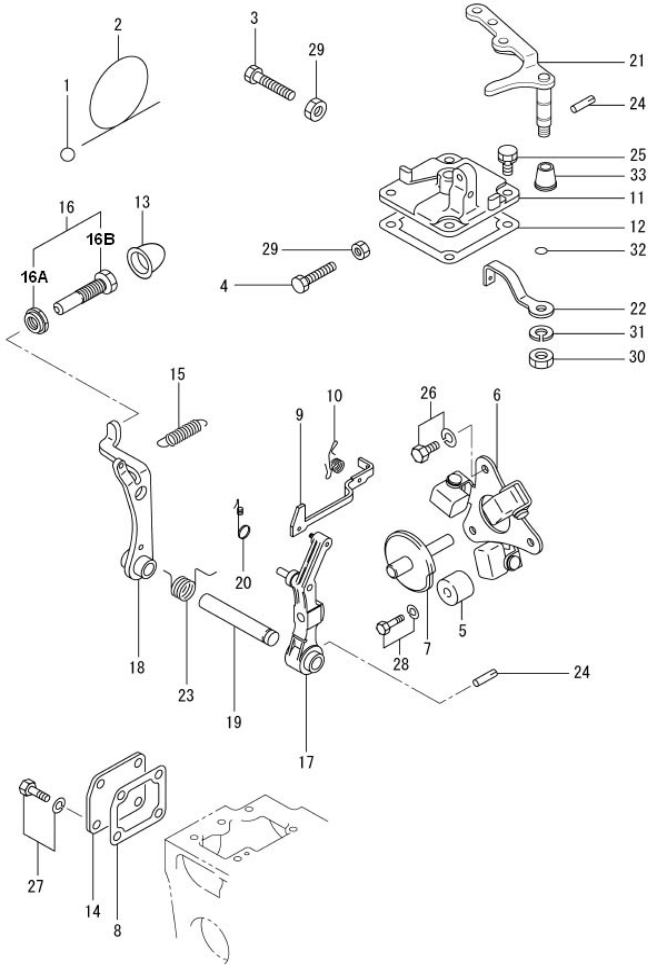

[NP] Not provided

Fuel System

D_MIB2_4_5			Fuel Supply Parts		
FIG.	REF.	QTY	DESCR.	FROM	UPTO
1	13814070	1	Electric Fuel Feed Pump 12V		
1A	13814072	2	NIPPLE EYE		
1B	57000361	2	Washer 10-14-1,5		
2A	52102153	2	Bolt DIN 933 M6-8 8.8		
2B	51030006	2	Washer DIN 125-6		
3	13814024	1	Bracket		
4	51086015	2	ONE EAR Clamp With INTERIOR Ring		
5	13814017.5	1	Fuel Pump Hose		
6	12814051	2	Screw,eye		
7	57000369	4	Washer 14,2-20-1,5		
8	17614027	1	Hose		
9	13114022	1	Gas-Oil Filter Element		
10	13114120	1	Cover,filter f/.SMI		
11	51031008	2	Washer DIN 9021 8		
12	52102257	2	Bolt DIN 933 M8-20 8.8		
13	17614028	1	Bypass "T"		
14	51086011	3	ONE EAR Clamp With Interior Ring		
15	17614026	1	0,04 M. Hose		
16	17214025	1	0,31 M. Hose		
NS	60900126	1	TERMINAL [NS]		

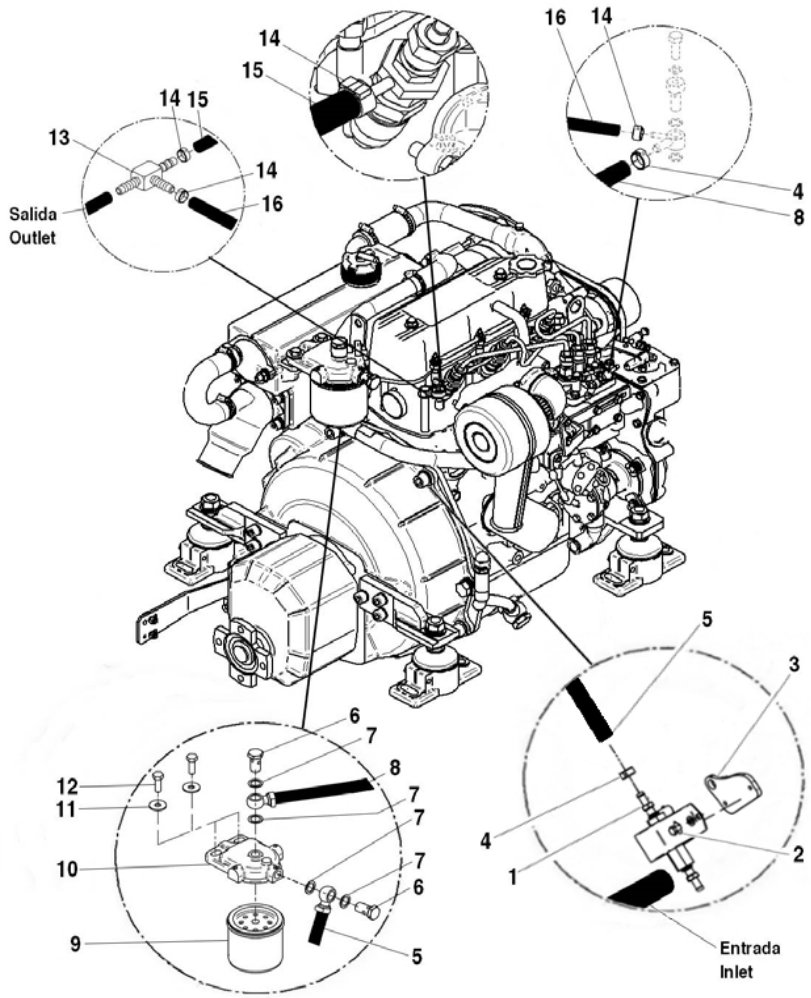

[NS] Not shown

Electrical System

	13817101		Kit Alternator 14V/75A ISKRA		
FIG.	**REF.**	**QTY**	**DESCR.**	**FROM**	**UPTO**
1	13817012	1	Alt. 14V/75A		
2	13817012.7	1	Pulley		
3	13817014	1	Plate		
4	17617027	1	V-Belt		
5	13817017	1	Spacer 17X28X5,5	09/09/2015	
6	17117002	1	Spacer 8,5X20X5		
7	13817118	1	Spacer 8,5x20x28	09/09/2015	
8	52101274	1	Bolt DIN 931 M8-110 8.8		
9	51030008	2	Washer DIN 125-8		
10	53033008	1	Washer GROWER DIN 127-8		
11	52120008	1	Nut DIN 934 M8 8.8		
12	52102157	1	Bolt DIN 933 M6-20 8.8		
13	51031008	1	Washer DIN 9021 8		
14	52102257	1	Bolt DIN 933 M8-20 8.8		
15	52102166	1	Bolt DIN 933 M6-65 8.8 CINCADO		
16	51030006	2	Washer DIN 125-6		
17	53033006	2	Washer GROWER DIN 127-6		
18	17617006	2	Spacer 6,5X12X5		
19	60900130	1	Flag Receptable Faston Terminal		
20	60900131	1	Insulation Flag Protective		
21	TR.16.6	1	Ring Terminal 16 Sec.		
22	TR.1.5.5	1	Ring Terminal 1.5 Sec.		

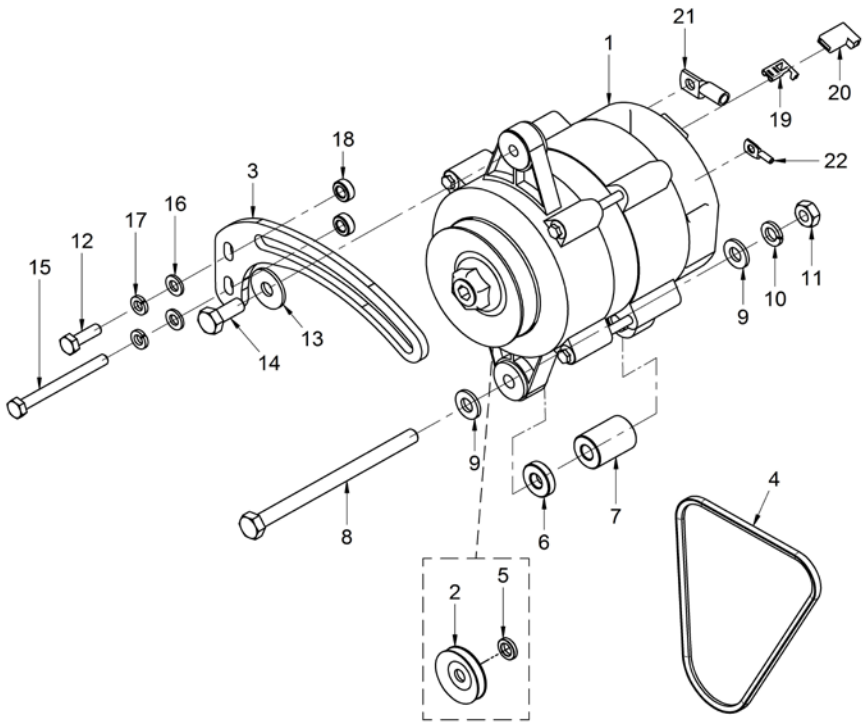

D_MIB1_5_5			Starter Assy		
FIG.	REF.	QTY	DESCR.	FROM	UPTO
1	13827002	1	Starter Assy 12 V		
2	52102259	2	Bolt DIN 933 M8-30 8.8		
3	53033008	2	Washer GROWER DIN 127-8		

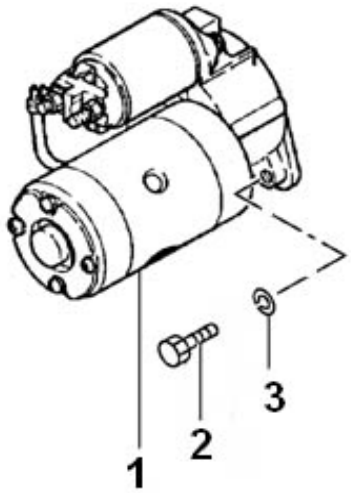

D_MIB1_5_7			Electrical Wiring		
FIG.	REF.	QTY	DESCR.	FROM	UPTO
1	60938125.2	1	Panel TE2 MINI-17/29		
2	60938005	1	Panel N.2		
3	60900121	1	FuseHolder, panel		
4	60900118	1	Fuse 10 A.		
5	60900036	1	Key,Starter Switch		
6	60900038	1	Cover,KEY		
7	60900037	1	Key-Locking		
8	60938910	1	Tachometer MINI-17/26		
9	60900301.2	1	Integrated Circuit Plate 12V Protection	23/06/2015	
10	60900119	1	Fuse 0.5A		
12	60900929	2	Bulb 12V		
13	60900915R	1	Water Gauge 12 V		
14	60938006	1	Gasket Panel		
15	13827005	1	Glow Relay		
16	13817005	1	Relay 6V		
17	51030005	1	Washer DIN 125-5		
18	52102104	1	Bolt DIN 933 M5-10 8.8		
19	52102154	2	Bolt DIN 933 M6-10 8.8		
20	51030006	2	Washer DIN 125-6		
21	60938210.1	1	Engine Wiring Ext. 3 M. SUPERSEAL		
22	60938200R.3	1	MINI-17/29 V3 Electrical Wiring		
23	17627018.4	1	Plate Glow Plug		
24	17627017.4	3	Plug,glow		
25	13824020	1	SOLENOID		
26	13425029	1	Nut (old)		
27	60934040	1	WIRINE		

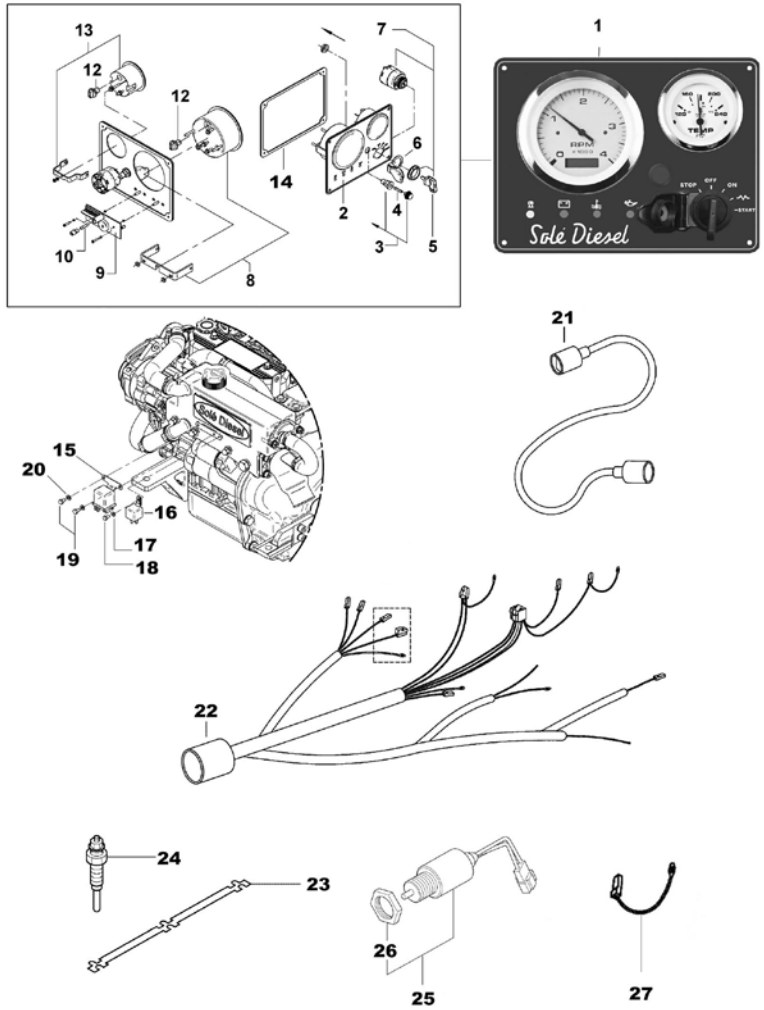

D_MIB1_5_8			Deluxe Instrument Panel		
FIG.	REF.	QTY	DESCR.	FROM	UPTO
1	60938127.2	1	SVT 30 MINI-17/29 Panel (Repl.) [NP]		
3	60900929	4	Bulb 12V		
4	60900925R	1	VOLTMETER 12 V		
5	60938910	1	Tachometer MINI-17/26		
6	60900920R	1	Oil Pressure Gauge 12 V		
7	54108003	1	Bolt DIN 84 M3-8 INOX.		
8	60900119	1	Fuse 0.5A		
9	60900301.2	1	Integrated Circuit Plate 12V Protection	23/06/2015	
10	60900915R	1	Water Gauge 12 V		
11	60990006	1	Gasket Panel		
12	60900037	1	Key-Locking		
13	60900038	1	Cover,KEY		
14	60990005	1	Panel N.3		
15	60900121	1	FuseHolder, panel		
16	60900118	1	Fuse 10 A.		
17	60900036	1	Key,Starter Switch		

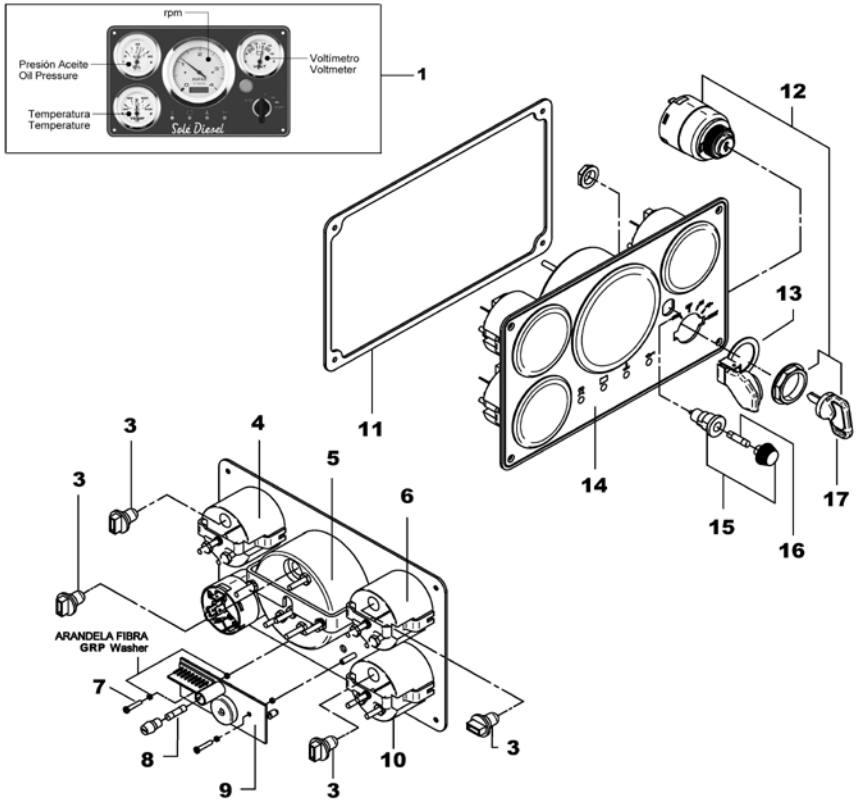

[NP] Not provided

D_60938130			SVT 20 MINI-17/29 Panel		
FIG.	REF.	QTY	DESCR.	FROM	UPTO
1	60938005.1	1	Panel N.2		
2	60900301.2	1	Integrated Circuit Plate 12V Protection		
3	54108003	2	Bolt DIN 84 M3-8 INOX.		
4	60900910.1	1	MTG Bracket 3" LG GA AMEGA		
5	60900910.2	3	Nut 8-32 W/CapTIVE STAR Washer		
6	60900037.2	1	Connector		
7	60900915.2	1	MTG Bracket		
8	60900037	1	Key-Locking		
9	60900931	2	SOCKET,WEDGE BASE		
10	60900929	2	Bulb 12V		
11	60900937	1	Water Gauge 12 V		
12	60938911	1	Tacómetro MINI-17/26 SVT		
13	60900096	1	Cover Plate for Motor Propeller		
14	60938006.1	1	Gasket Panel		
NS	60900091	1	MICRO Relay 12V 12-20 [NS]		
NS	60910012	1	System Back Panel SVT/MVT 20 12V [NS]	07/12/2016	

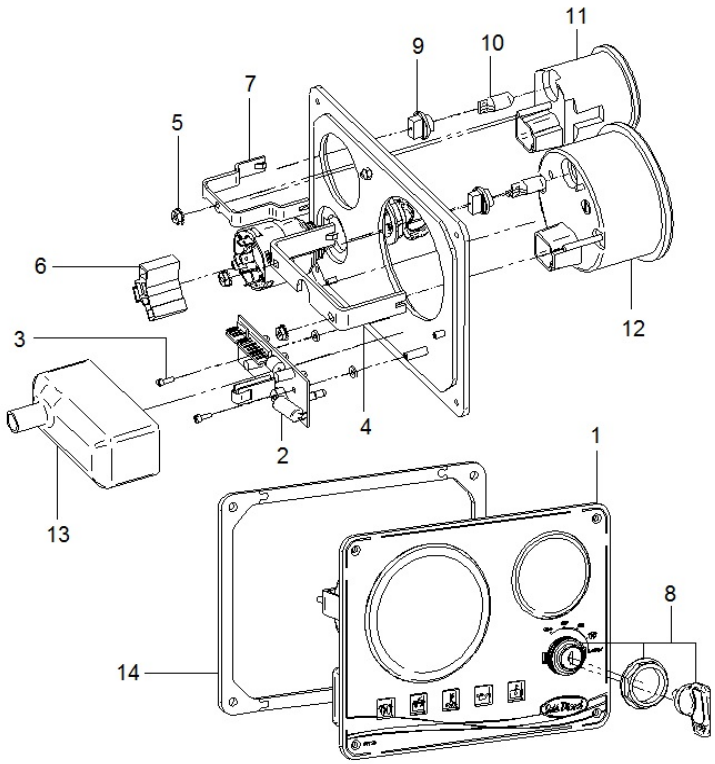

[NS] Not shown

D_60938132			SVT 30 MINI-17/29 Panel		
FIG.	REF.	QTY	DESCR.	FROM	UPTO
1	54108003	2	Bolt DIN 84 M3-8 INOX.		
2	60900037	1	Key-Locking		
3	60900037.2	1	Connector		
4	60900910.2	5	Nut 8-32 W/CapTIVE STAR Washer		
5	60900931	4	SOCKET,WEDGE BASE		
6	60900929	4	Bulb 12V		
7	60990005.1	1	Panel N.3		
8	60990006.1	1	Gasket Panel		
9	60900096	1	Cover Plate for Motor Propeller		
10	60900301.2	1	Integrated Circuit Plate 12V Protection		
11	60900910.1	1	MTG Bracket 3" LG GA AMEGA		
12	60900915.2	3	MTG Bracket		
13	60900941	1	VOLTMETER 12V		
14	60938911	1	Tacómetro MINI-17/26 SVT		
15	60900937	1	Water Gauge 12 V		
16	60900939	1	Oil Pressure Gauge 12V		
NS	60900091	1	MICRO Relay 12V 12-20 [NS]		
NS	60910014	1	System Back Panel SVT/MVT 30 12V [NS]	07/12/2016	

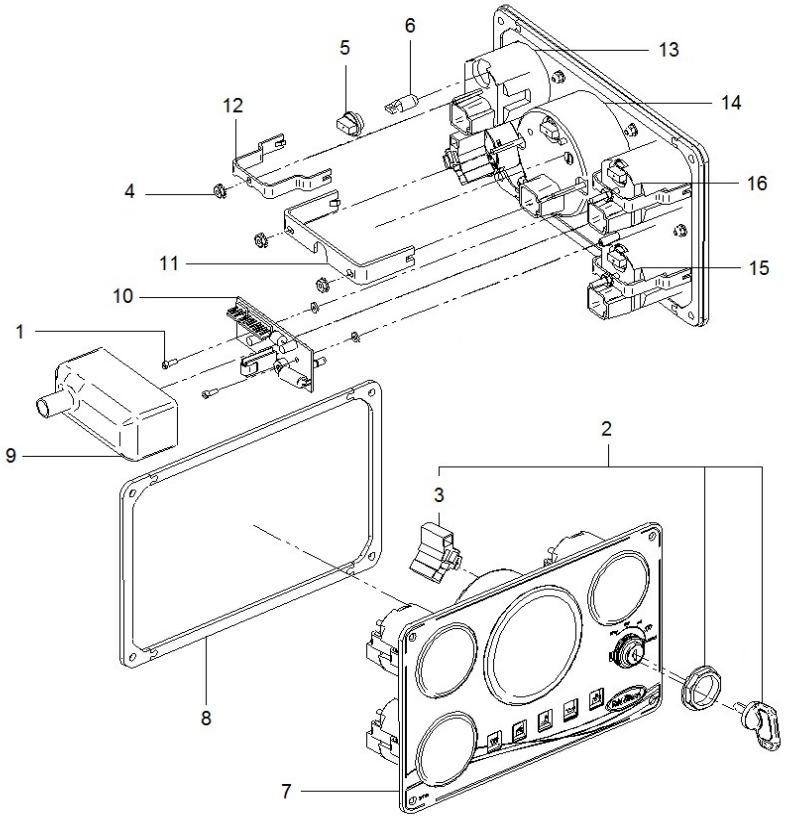

[NS] Not shown

Maintenance Kit

D_17620101.4			Kit Gasket		
FIG.	REF.	QTY	DESCR.	FROM	UPTO
1	17727026	1	Washer [NP]		
2	17220047	1	Gasket Water Pump [NP]		
3	17624047	1	Gasket [NP]		
4	17621004	1	Gasket,Cylinder Head		
5	17621010	1	Rocker Cover Gasket		
6	17620012	1	Gasket Cover [NP]		
7	13820016	1	Gasket Oil Seal C		
8	13820018	1	Gasket Front Plate		
9	13820038	1	Gasket Housing		
0	17620101.4	1	Kit Gasket		
10	13820040	1	Gasket Gear Case		
11	13820033	1	Gasket Oil PAN [NP]		
12	17621042	1	Gasket		
13	17621032	1	Gasket Intake COV		
14	17621043	1	Gasket		
15	13821022	1	Gasket Water Pump		
16	13821033	1	Gasket Thermostat		
17	60530072.4	1	Gasket,fuel pump		
18	13823033	1	Gasket Governor Cover		
19	13823014	1	Gasket Tie Rod CO		
20	13120032	2	Washer 18-23-1,5 [NP]		
21	17424025G.1	3	Gasket Fuel Return (Genset)		
22	13824013	3	Injector Washer		
23	13222054	6	Seal Valve Stem		
24	13820044	2	O-Ring D. 11X2,5		
25	17624045	1	O-Ring		
26	17624048	1	O-Ring		
27	17621033.4	1	Gasket Thermostat		
28	13820002	4	Seal Side		
29	13811007	2	O-Ring D. 57X2,5		
30	17613014	1	Gasket		
31	31211003	1	Gasket Cover		

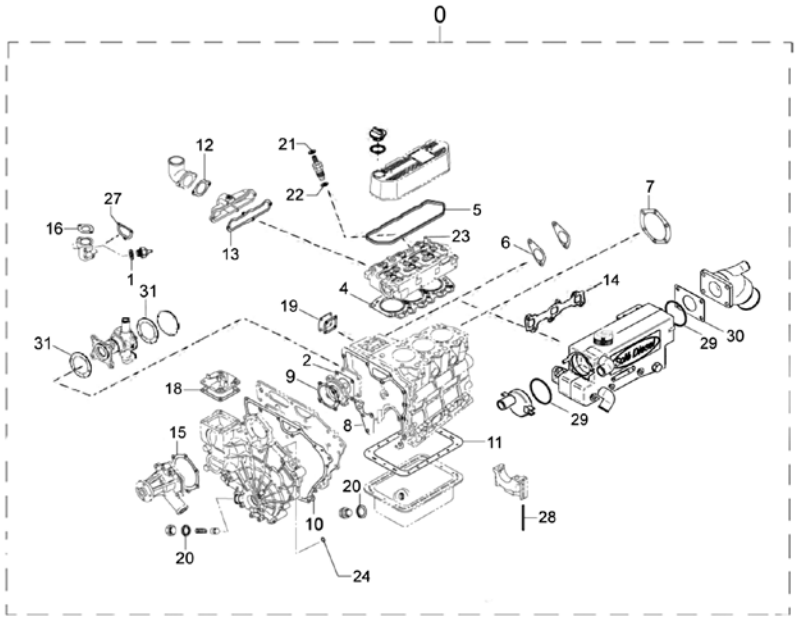

[NP] Not provided

Maintenance Kit

	17611100.4		Pipe Rubber Set,Water LINE 4 V.		
FIG.	REF.	QTY	DESCR.	FROM	UPTO
1	13811017	2	Pipe 28-38-80		
2	17611002	1	Pipe 28-38-110		
3	17611034	1	Hose		
4	M87501927	0,75	Water Intake Hose (HQ) D. 19-27		

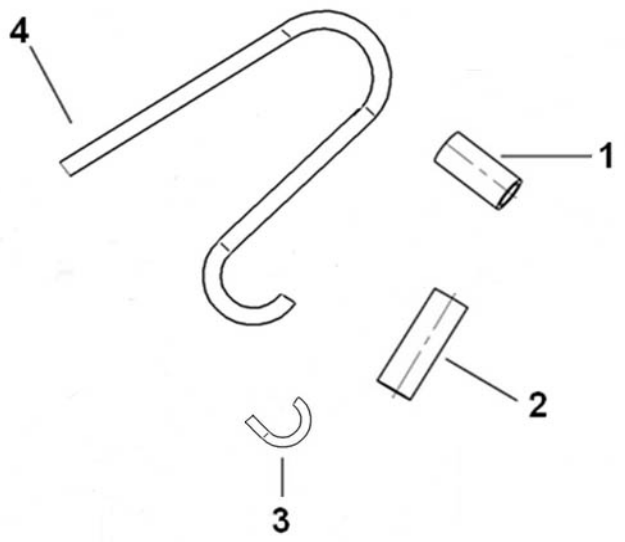

Maintenance Kit

	33811000K		Repair Kit Water Pump 1/2"		
FIG.	REF.	QTY	DESCR.	FROM	UPTO
1	31211008	1	1/2" Impeller		
2	31211003	1	Gasket Cover		
3	33411020	1	Seal		
4	33411019	1	Seal		
5	33311013	1	O-Ring D. 15X2		
NS	17011007	1	O-Ring D. 57X3 [NS]		

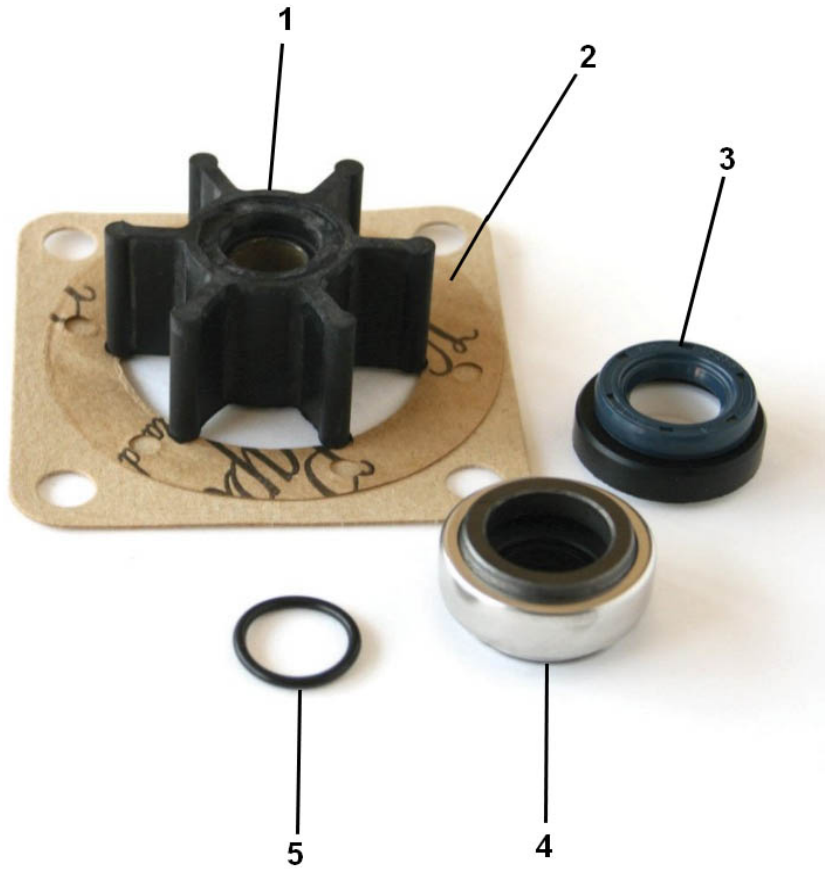

[NS] Not shown

Kit Gearbox

17610100.4			Kit S-Drive VOLVO 130S		
FIG.	**REF.**	**QTY**	**DESCR.**	**FROM**	**UPTO**
1	13810046	1	Flexible Coupling Type A SAE 6,5		
2	53033008	10	Washer GROWER DIN 127-8		
3	52103256	6	Bolt DIN 912 M8-15 8.8		
4	17610014	1	Engine Adaptor		
5	53038012	5	Washer DIN 6798-A 12		
6	53203357	5	Bolt DIN 912 M12-1,25-20 12.9		
7	51030010	6	Washer DIN 125-10		
8	52101311	6	Bolt DIN 931 M10-40 8.8		
9	52102257	4	Bolt DIN 933 M8-20 8.8		

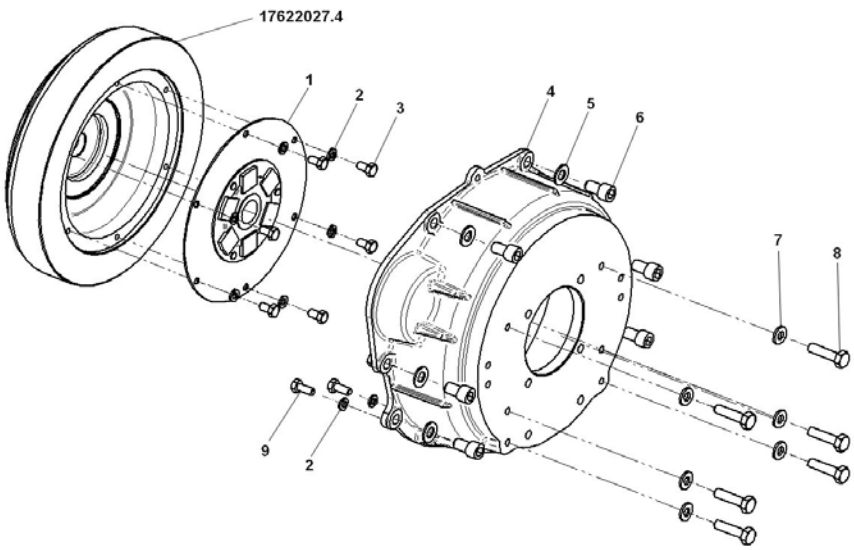

Kit Gearbox

	17610101		Kit S-Drive VOLVO 120S		
FIG.	**REF.**	**QTY**	**DESCR.**	**FROM**	**UPTO**
1	17610022	1	Flywheel Supplement		
2	53033008	10	Washer GROWER DIN 127-8		
3	52102257	10	Bolt DIN 933 M8-20 8.8		
4	13810042	1	Flexible Coupling Type F D. 175 VULKAN		
5	53033006	6	Washer GROWER DIN 127-6		
6	52102156	6	Bolt DIN 933 M6-16 8.8		
7	52101316	6	Bolt DIN 931 M10-65 8.8		
8	53038010	12	Washer DIN 6798-A 10		
9	17610014	1	Engine Adaptor		
10	53038012	4	Washer DIN 6798-A 12		
11	53203357	4	Bolt DIN 912 M12-1,25-20 12.9		
12	13910016.1	1	Spacer, VOLVO Stern Drive 110S		
13	52120010	6	Nut DIN 934 M10 8.8		
14	17622027.4.2	1	Flywheel		

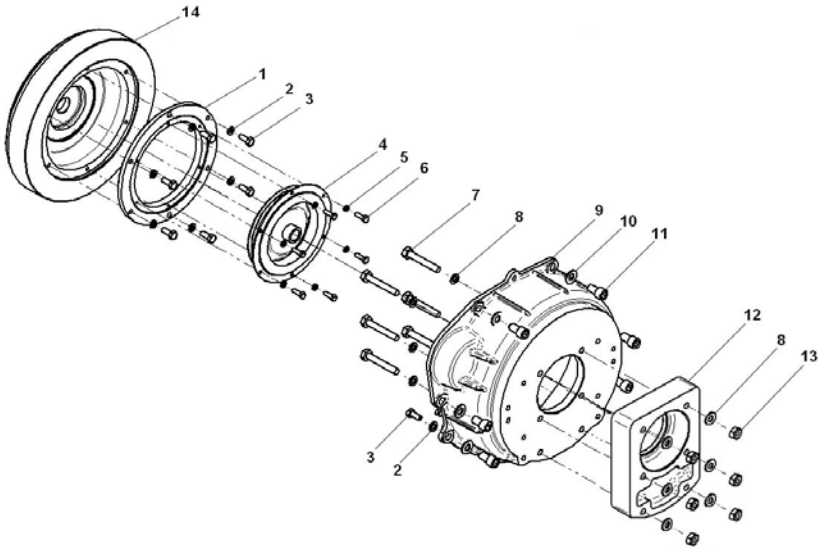

Kit Gearbox

	17610102		Kit S-Drive VOLVO 100S		
FIG.	**REF.**	**QTY**	**DESCR.**	**FROM**	**UPTO**
1	17610024	1	Shaft (Cardan 100S)		
2	53033008	10	Washer GROWER DIN 127-8		
3	52102258	6	Bolt DIN 933 M8-25 8.8		
4	17610015	1	Engine Adaptor		
5	53038012	5	Washer DIN 6798-A 12		
6	53203357	5	Bolt DIN 912 M12-1,25-20 12.9		
7	52103309	4	Bolt DIN 912 M10-30 8.8		
8	53033010	4	Washer GROWER DIN 127-10		
9	13810037.1	2	Support REAR	08/10/2014	
10	52102257	4	Bolt DIN 933 M8-20 8.8		

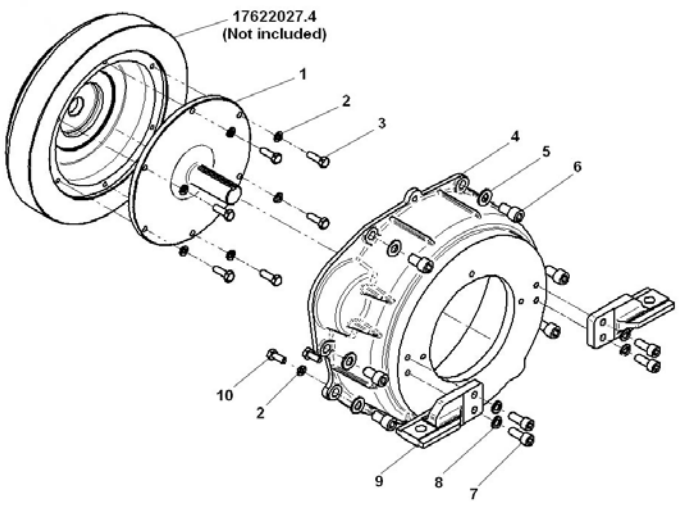

Kit Gearbox

17610103			Kit S-Drive SD20 YANMAR		
FIG.	**REF.**	**QTY**	**DESCR.**	**FROM**	**UPTO**
1	17610023	1	Flywheel Supplement		
2	53033008	16	Washer GROWER DIN 127-8		
3	52102258	6	Bolt DIN 933 M8-25 8.8		
4	52102257	10	Bolt DIN 933 M8-20 8.8		
5	17610016	1	Engine Adaptor SAE7		
6	53038012	5	Washer DIN 6798-A 12		
7	53203357	5	Bolt DIN 912 M12-1,25-20 12.9		
8	13810045	1	Adaptor SAE6 TO SAE7		
9	52103308	6	Bolt DIN 912 M10-25 8.8		
10	52102259	8	Bolt DIN 933 M8-30 8.8		
11	53038008	8	Washer DIN 6798-A 8		

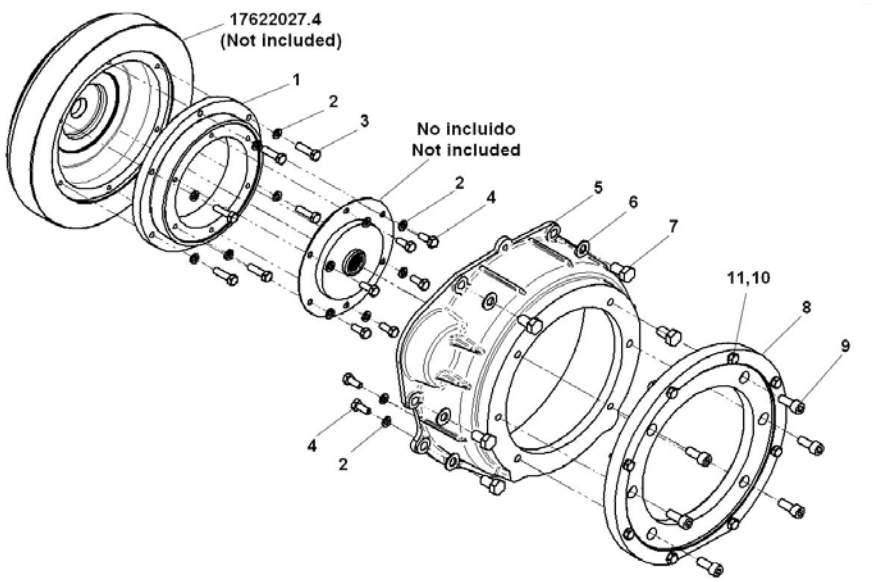

Kit Gearbox

17610105			Kit GearBox VOLVO MS-2 & MS-2B		
FIG.	**REF.**	**QTY**	**DESCR.**	**FROM**	**UPTO**
1	17610022	1	Flywheel Supplement		
2	53033008	10	Washer GROWER DIN 127-8		
3	52102257	10	Bolt DIN 933 M8-20 8.8		
4	13810042	1	Flexible Coupling Type F D. 175 VULKAN		
5	53033006	6	Washer GROWER DIN 127-6		
6	52102156	6	Bolt DIN 933 M6-16 8.8		
7	52101317	6	Bolt DIN 931 M10-70 8.8		
8	53038010	6	Washer DIN 6798-A 10		
9	17610014	1	Engine Adaptor		
10	53038012	5	Washer DIN 6798-A 12		
11	53203357	5	Bolt DIN 912 M12-1,25-20 12.9		
12	13810037.1	2	Support REAR	08/10/2014	
13	13910016.1	1	Spacer, VOLVO Stern Drive 110S		
14	52103309	4	Bolt DIN 912 M10-30 8.8		
15	53033010	4	Washer GROWER DIN 127-10		

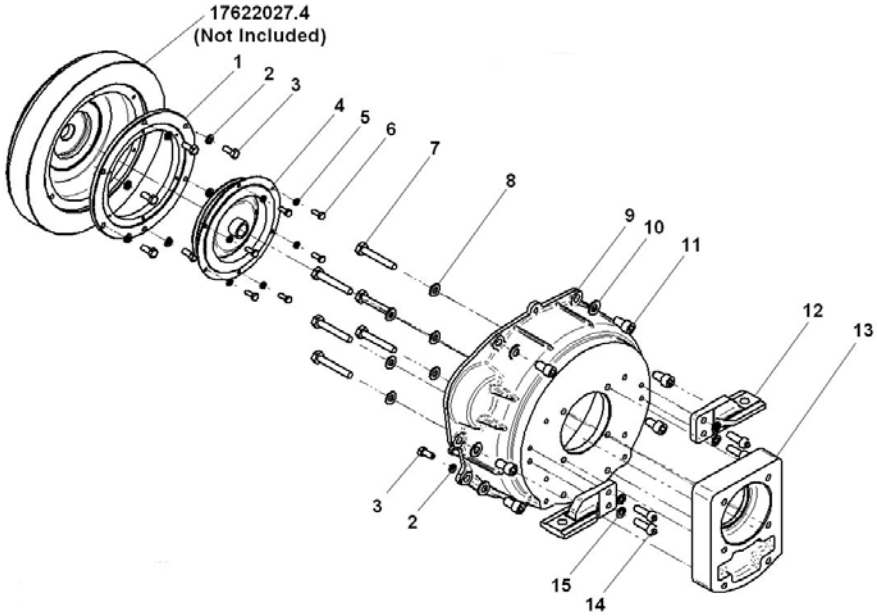

Kit Gearbox

17610107.4			Kit GearBox TMC-40P Version 4/5		
FIG.	**REF.**	**QTY**	**DESCR.**	**FROM**	**UPTO**
1	13810046	1	Flexible Coupling Type A SAE 6,5		
2	53033008	12	Washer GROWER DIN 127-8		
3	52103256	6	Bolt DIN 912 M8-15 8.8		
4	52102258	6	Bolt DIN 933 M8-25 8.8	12/03/2015	
5	53038008	6	Washer DIN 6798-A 8		
6	17610013	1	Engine adaptor		
7	53038012	5	Washer DIN 6798-A 12		
8	53203357	5	Bolt DIN 912 M12-1,25-20 12.9		
9	13810037	2	Support REAR		
10	53033010	6	Washer GROWER DIN 127-10		
11	24810901	1	Bracket, GearBox Control		
12	52103309	6	Bolt DIN 912 M10-30 8.8		
13	51030005	2	Washer DIN 125-5		
14	24810913	1	Clamp,CABLE		
15	51030008	2	Washer DIN 125-8	19/11/2013	
16	52120008	2	Nut DIN 934 M8 8.8		
17	14719115	1	Coupling,cable		
18	51030006	1	Washer DIN 125-6		
19	51051107	1	Pin DIN-94 1,6-16		
20	52102257	4	Bolt DIN 933 M8-20 8.8		

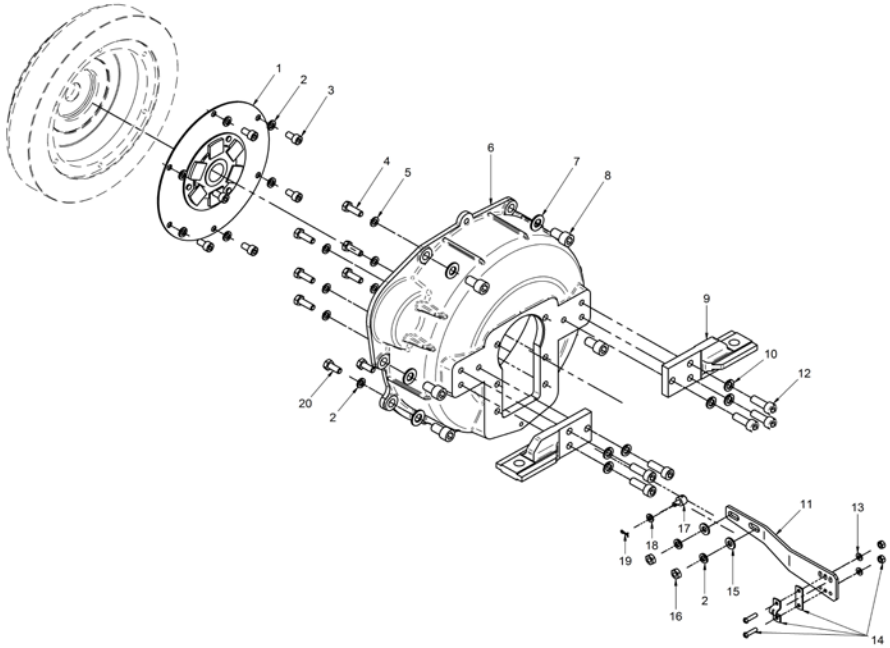

Kit Gearbox

	17610110.4		Kit GearBox RONIM-5		
FIG.	**REF.**	**QTY**	**DESCR.**	**FROM**	**UPTO**
1	17622027.4.1	1	Flywheel		
2	13810046	1	Flexible Coupling Type A SAE 6,5		
3	53033008	12	Washer GROWER DIN 127-8		
4	52103256	6	Bolt DIN 912 M8-15 8.8		
5	53038012	5	Washer DIN 6798-A 12		
6	53203357	5	Bolt DIN 912 M12-1,25-20 12.9		
7	52103257	2	Bolt DIN 912 M8-20 8.8		
8	13114004	1	Cover		
9	13114002	1	Gasket		
10	13810037	2	Support REAR		
11	53033010	6	Washer GROWER DIN 127-10		
12	52102309	6	Bolt DIN 933 M10-30 8.8		
13	52102257	4	Bolt DIN 933 M8-20 8.8		

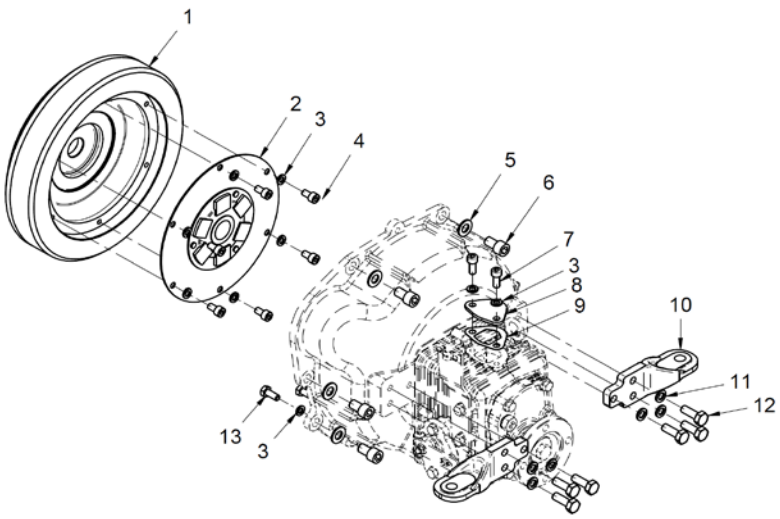

Kit Gearbox

17610111			Kit S-Drive VOLVO 110S		
FIG.	**REF.**	**QTY**	**DESCR.**	**FROM**	**UPTO**
1	17610021	1	Coupling, Drive		
2	17610019	1	Spacer, VOLVO Stern Drive 110S		
3	53033008	16	Washer GROWER DIN 127-8		
4	52102258	12	Bolt DIN 933 M8-25 8.8		
5	17610016	1	Engine Adaptor SAE7		
6	53038012	5	Washer DIN 6798-A 12		
7	53203357	5	Bolt DIN 912 M12-1,25-20 12.9		
8	13810016	1	Spacer,VOLVO Stern Drive ADAP.110S		
9	53033010	12	Washer GROWER DIN 127-10		
10	52103308	6	Bolt DIN 912 M10-25 8.8		
11	52101310	6	Bolt DIN 931 M10-35 8.8		
12	52102257	4	Bolt DIN 933 M8-20 8.8		

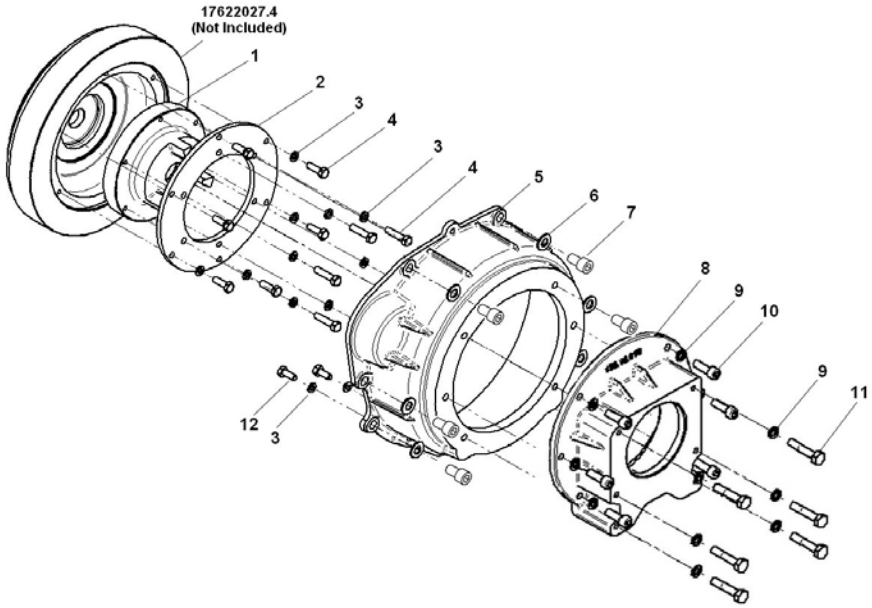

Kit Gearbox

17610120			Kit S-Drive VOLVO 120SB/120SC/120SE		
FIG.	**REF.**	**QTY**	**DESCR.**	**FROM**	**UPTO**
1	17610022	1	Flywheel Supplement		
2	53033008	10	Washer GROWER DIN 127-8		
3	52102257	10	Bolt DIN 933 M8-20 8.8		
4	13810042	1	Flexible Coupling Type F D. 175 VULKAN		
5	53033006	6	Washer GROWER DIN 127-6		
6	52102156	6	Bolt DIN 933 M6-16 8.8		
7	17610014	1	Engine Adaptor		
8	53038012	5	Washer DIN 6798-A 12		
9	53203357	5	Bolt DIN 912 M12-1,25-20 12.9		
10	17610026	1	Spacer, SDRIVE 120BS		
11	51030010	6	Washer DIN 125-10		
12	52101318	6	Bolt DIN 931 M10-75 8.8		

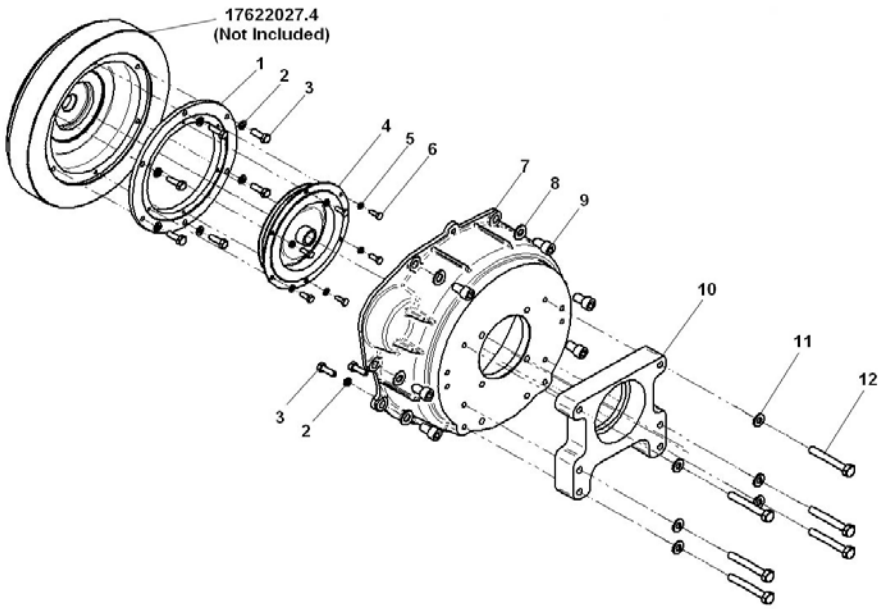

Kit Gearbox

17610125			Kit S-Drive BUKH DV10 & DV20		
FIG.	**REF.**	**QTY**	**DESCR.**	**FROM**	**UPTO**
1	17610025	1	Shaft		
2	53033008	10	Washer GROWER DIN 127-8		
3	52102258	6	Bolt DIN 933 M8-25 8.8		
4	17310027	1	KEY		
5	13910027	1	Washer		
7	17610016	1	Engine Adaptor SAE7		
8	53038012	5	Washer DIN 6798-A 12		
9	53203357	5	Bolt DIN 912 M12-1,25-20 12.9		
10	13910026	1	BUKH S-Drive DV-20 Adaptor Flange		
11	53033010	6	Washer GROWER DIN 127-10		
12	52102308	7	Bolt DIN 933 M10-25 8.8		
13	12110018	1	Stud		
14	53038008	1	Washer DIN 6798-A 8		
15	52120008	1	Nut DIN 934 M8 8.8		
16	16511007	6	Stud		
17	53038010	6	Washer DIN 6798-A 10		
18	52120010	6	Nut DIN 934 M10 8.8		
19	52102257	4	Bolt DIN 933 M8-20 8.8		

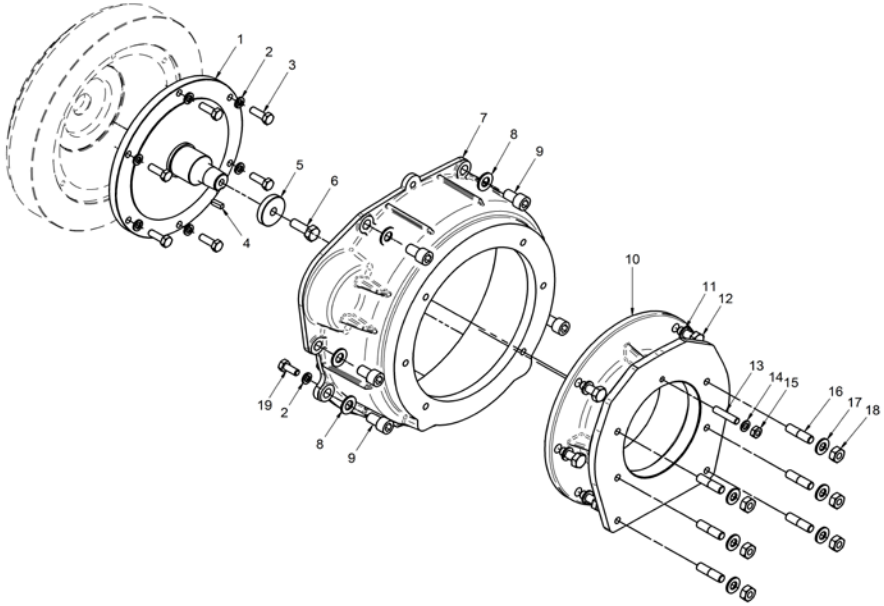

Kit Gearbox

17610127.4			Kit Bobtail SAE-7		
FIG.	**REF.**	**QTY**	**DESCR.**	**FROM**	**UPTO**
1	17610016	1	Engine Adaptor SAE7		
2	13910003.1	2	Rear Bracket	19/03/2015	
3	13810038	1	Support	14/11/2014	
4	13810039	1	Support		
5	53038012	5	Washer DIN 6798-A 12		
6	53203357	5	Bolt DIN 912 M12-1,25-20 12.9		
7	52102257	4	Bolt DIN 933 M8-20 8.8		
8	53033008	4	Washer GROWER DIN 127-8		
9	53033010	4	Washer GROWER DIN 127-10		
10	52203308	4	Bolt DIN 912 M10-1,25-25 12.9		

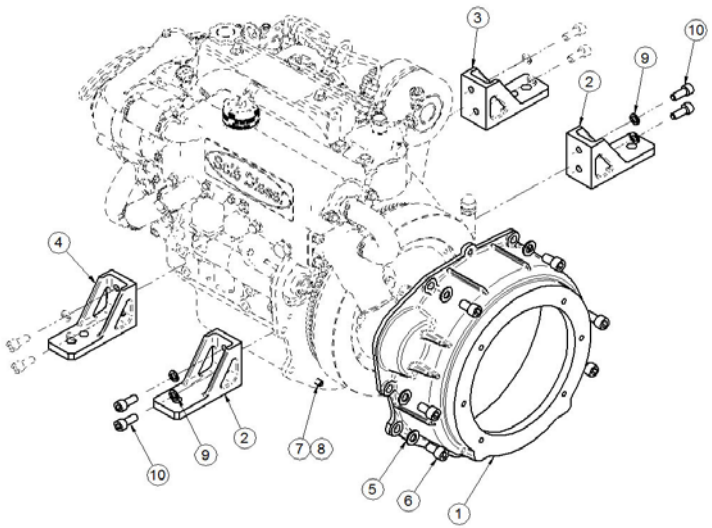

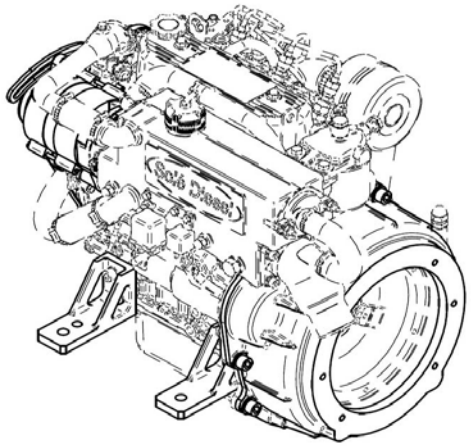

Kit Gearbox

17610200.4			Kit GearBox TM-345/345A		
FIG.	REF.	QTY	DESCR.	FROM	UPTO
1	17210071	1	Flexible Coupling Type B SAE 6"1/2		
2	53033008	18	Washer GROWER DIN 127-8		
3	52102257	14	Bolt DIN 933 M8-20 8.8		
4	17610016	1	Engine Adaptor SAE7		
5	53038012	5	Washer DIN 6798-A 12		
6	53203357	5	Bolt DIN 912 M12-1,25-20 12.9		
7	13910018.1	1	Adaptor SAE 7		
8	24810913	1	Clamp,CABLE		
9	51030005	2	Washer DIN 125-5		
10	18619020	1	Bracket,Gear box control		
11	51030008	6	Washer DIN 125-8		
12	52102256	2	Bolt DIN 933 M8-15 8.8		
13	51051107	1	Pin DIN-94 1,6-16		
14	51030006	4	Washer DIN 125-6		
15	ALLPA.93	1	Coupling,cable	23/05/2017	
16	12120018	2	Stud		
17	51031008	2	Washer DIN 9021 8		
18	52120008	6	Nut DIN 934 M8 8.8		
19	13912041	1	Bracket,TM Oil Cooler		
20	17012024	2	Pipe		
21	17211031	2	Elbow		
22	54081020	2	Clamp DIN 3017 20-32/9 W4		
23	15212007	2	Cover, water cooler D.22		
24	54082050	2	Clamp DIN 3017 50-70/12 W4		
25	59072604	2	Clamp	29/03/2014	
26	14712015	2	Bolt,Coupling pipe oil		
27	57000375	4	Washer 17-22-1,5		
28	14712051	1	Cooler,oil		
NS	M87501927	0	Water Intake Hose (HQ) D. 19-27 [NS] [VAR]		

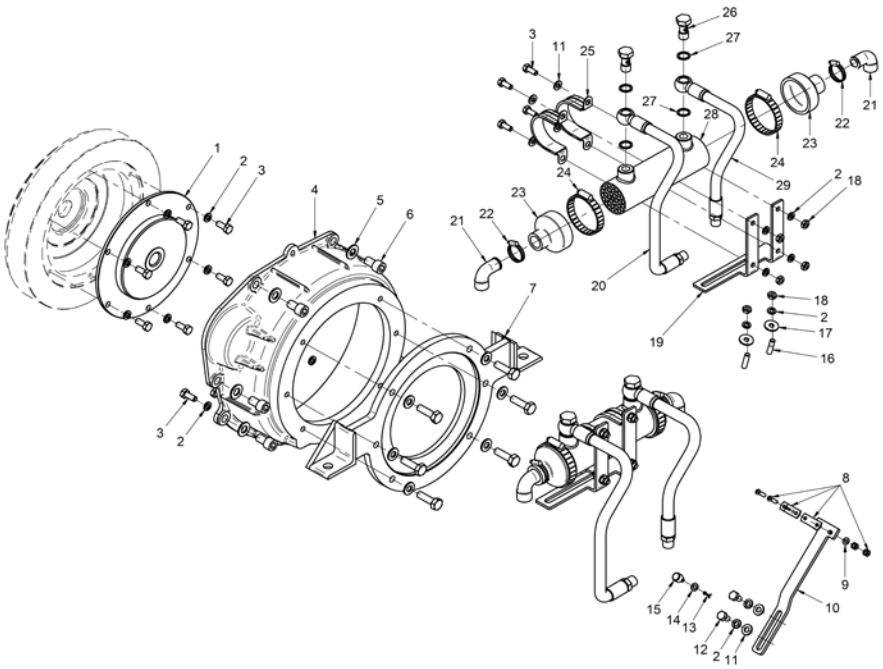

[NS] Not shown
[VAR] Variable according to repair

Kit Gearbox

17610230			Kit GearBox ZF 15 MIV 4 V.		
FIG.	**REF.**	**QTY**	**DESCR.**	**FROM**	**UPTO**
1	13810046	1	Flexible Coupling Type A SAE 6,5		
2	53033008	12	Washer GROWER DIN 127-8		
3	52102256	6	Bolt DIN 933 M8-15 8.8		
4	52102308	6	Bolt DIN 933 M10-25 8.8		
5	53038010	6	Washer DIN 6798-A 10		
6	17610017	1	Engine Adaptor		
7	53038012	5	Washer DIN 6798-A 12		
8	53203357	5	Bolt DIN 912 M12-1,25-20 12.9		
9	13810010.2	1	REAR, Bracket		
10	51030008	2	Washer DIN 125-8		
11	52120008	2	Nut DIN 934 M8 8.8		
12	51051107	1	Pin DIN-94 1,6-16		
13	51030006	4	Washer DIN 125-6		
14	ALLPA.93	1	Coupling,cable	23/05/2017	
15	24810913	1	Clamp,CABLE		
16	24610901	1	Bracket, GearBox Control		
17	52105307	2	Bolt DIN 7991 M10-20 10.9		
18	52102309	4	Bolt DIN 933 M10-30 8.8		
19	53033010	4	Washer GROWER DIN 127-10		
20	13810010.3	1	REAR, Bracket		
21	52102257	4	Bolt DIN 933 M8-20 8.8		
22	51030005	2	Washer DIN 125-5		

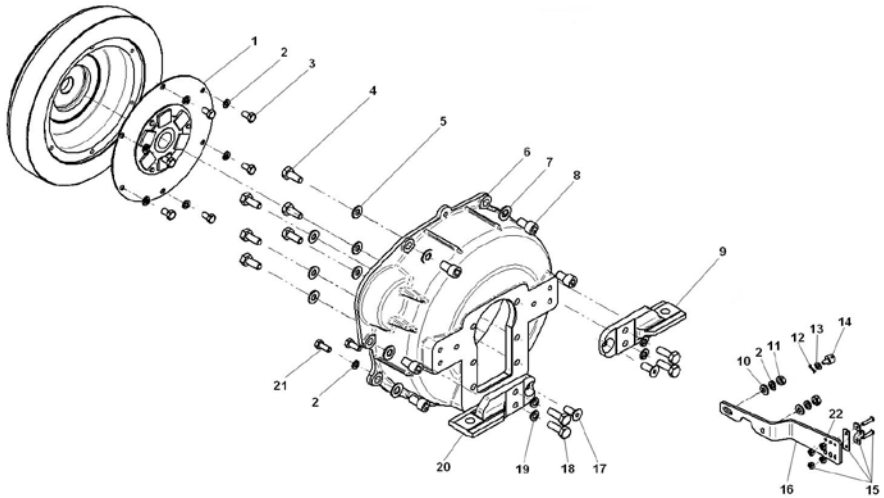

Kit Gearbox

	17610240		Kit Bobtail		
FIG.	**REF.**	**QTY**	**DESCR.**	**FROM**	**UPTO**
1	13810038	1	Support	14/11/2014	
2	13810039	1	Support		
3	13910003.1	2	Rear Bracket	19/03/2015	
4	53033010	4	Washer GROWER DIN 127-10		
5	52203308	4	Bolt DIN 912 M10-1,25-25 12.9		
6	53203357	1	Bolt DIN 912 M12-1,25-20 12.9		
7	53033012	1	Washer GROWER DIN 127-12		

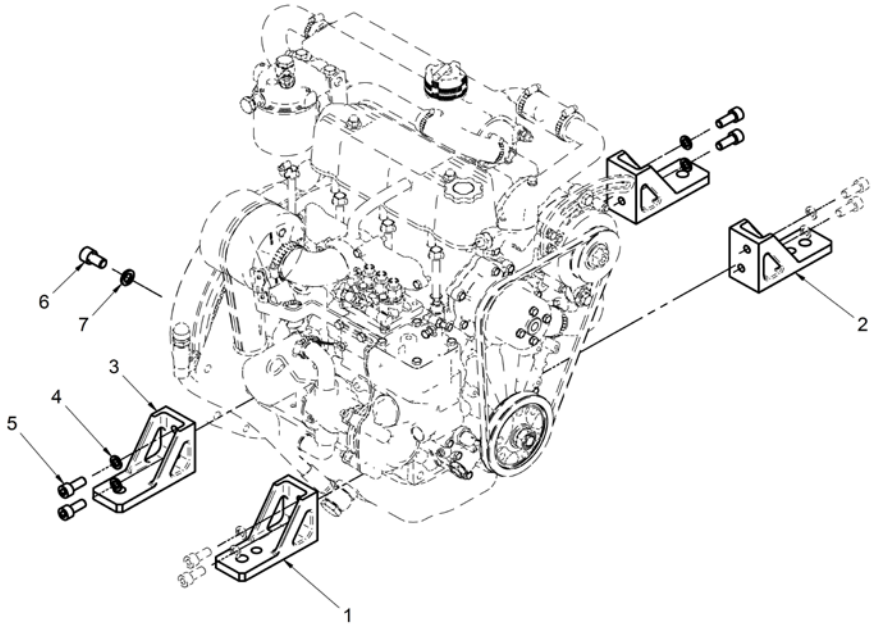

Kit Gearbox

17610241.4			Kit GearBox TMC-60 MINI-29		
FIG.	**REF.**	**QTY**	**DESCR.**	**FROM**	**UPTO**
1	13810046	1	Flexible Coupling Type A SAE 6,5		
2	53033008	12	Washer GROWER DIN 127-8		
3	52103256	6	Bolt DIN 912 M8-15 8.8		
4	52101259	6	Bolt DIN 931 M8-30 8.8		
5	53038008	6	Washer DIN 6798-A 8		
6	17610013	1	Engine adaptor		
7	53038012	5	Washer DIN 6798-A 12		
8	53203357	5	Bolt DIN 912 M12-1,25-20 12.9		
9	13810037.1	2	Support REAR	08/10/2014	
10	53033010	4	Washer GROWER DIN 127-10		
11	52103309	4	Bolt DIN 912 M10-30 8.8		
12	24880901	1	Bracket, GearBox Control		
13	24810913	1	Clamp,CABLE		
14	51030008	2	Washer DIN 125-8		
15	52102257	6	Bolt DIN 933 M8-20 8.8		
16	ALLPA.93	1	Coupling,cable	23/05/2017	
17	51030006	4	Washer DIN 125-6		
18	51051107	1	Pin DIN-94 1,6-16		
19	51030005	2	Washer DIN 125-5		

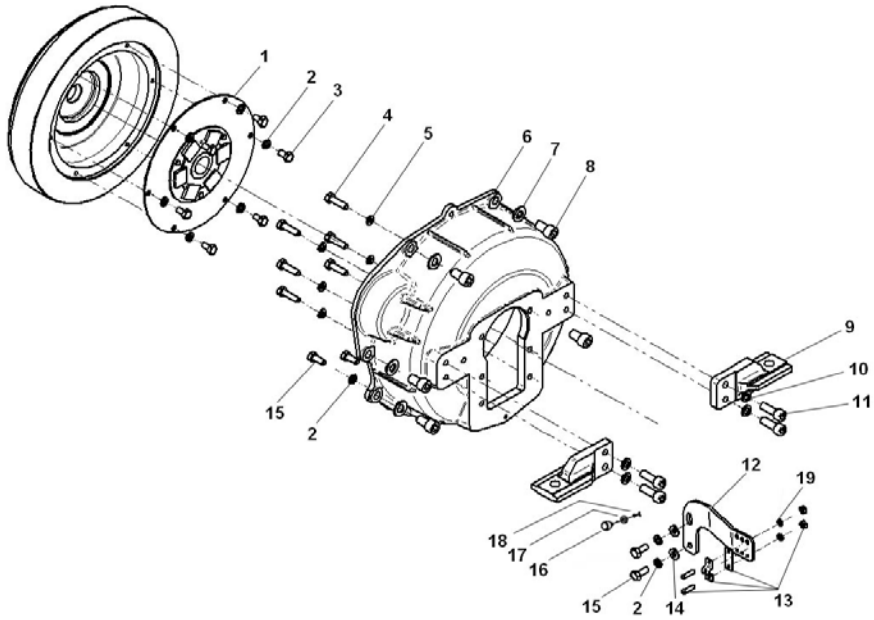

Kit Gearbox

	17632100		Kit S-Drive SELVA		
FIG.	**REF.**	**QTY**	**DESCR.**	**FROM**	**UPTO**
1	13810046	1	Flexible Coupling Type A SAE 6,5		
2	53033008	16	Washer GROWER DIN 127-8		
3	52103256	6	Bolt DIN 912 M8-15 8.8		
4	52101263	6	Bolt DIN 931 M8-50 8.8		
5	17610016	1	Engine Adaptor SAE7		
6	53038012	5	Washer DIN 6798-A 12		
7	53203357	5	Bolt DIN 912 M12-1,25-20 12.9		
8	22510012	1	Adaptor Flange "BW"		
9	53038010	6	Washer DIN 6798-A 10		
10	52102309	6	Bolt DIN 933 M10-30 8.8		
11	52120008	6	Nut DIN 934 M8 8.8		
12	52102257	4	Bolt DIN 933 M8-20 8.8		

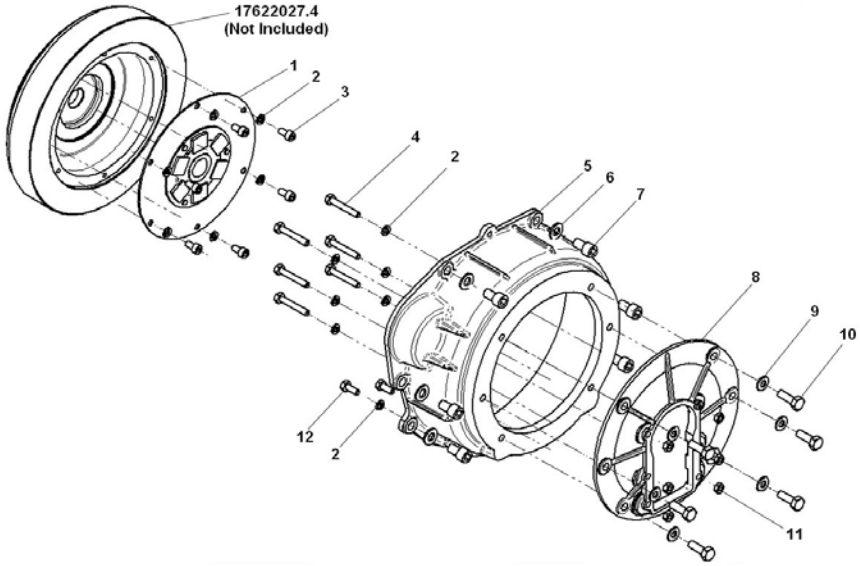

Kit Gearbox

17632100A.4			Kit GearBox TMC/ZF/PRM		
FIG.	**REF.**	**QTY**	**DESCR.**	**FROM**	**UPTO**
1	13810046	1	Flexible Coupling Type A SAE 6,5		
2	53033008	12	Washer GROWER DIN 127-8		
3	52103256	6	Bolt DIN 912 M8-15 8.8		
4	52102258	6	Bolt DIN 933 M8-25 8.8	12/03/2015	
5	53038008	6	Washer DIN 6798-A 8		
6	17610013	1	Engine adaptor		
7	53038012	5	Washer DIN 6798-A 12		
8	53203357	5	Bolt DIN 912 M12-1,25-20 12.9		
9	13810037	2	Support REAR	05/12/2014	
10	52103309	6	Bolt DIN 912 M10-30 8.8		
11	53033010	6	Washer GROWER DIN 127-10		
12	52102257	4	Bolt DIN 933 M8-20 8.8		

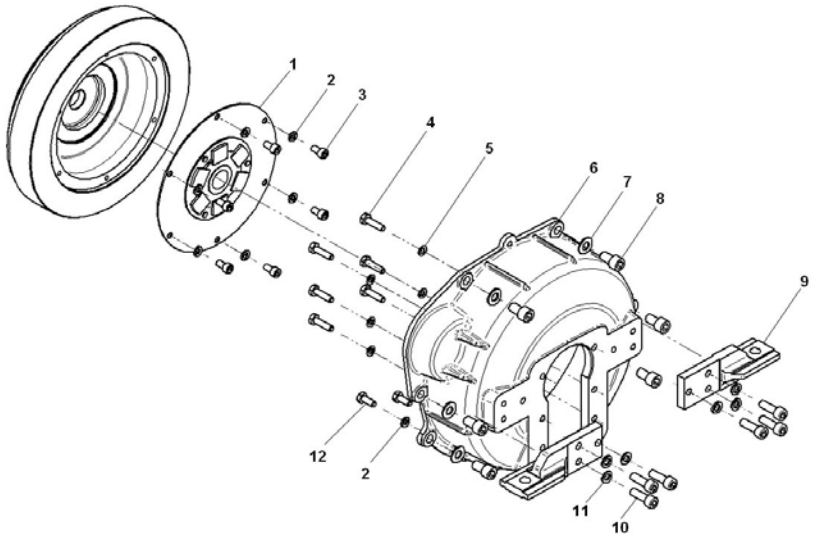

Kit Gearbox

17632100T.4			Kit S-Drive TECHNO.SP60		
FIG.	**REF.**	**QTY**	**DESCR.**	**FROM**	**UPTO**
1	13810046	1	Flexible Coupling Type A SAE 6,5		
2	53033008	10	Washer GROWER DIN 127-8		
3	52103256	6	Bolt DIN 912 M8-15 8.8		
4	17610016	1	Engine Adaptor SAE7		
5	53038012	4	Washer DIN 6798-A 12		
6	53203357	4	Bolt DIN 912 M12-1,25-20 12.9		
7	24813501	1	BW Bell Housing		
8	53038010	8	Washer DIN 6798-A 10		
9	52102309	6	Bolt DIN 933 M10-30 8.8		
10	51051107	1	Pin DIN-94 1,6-16		
11	51030006	4	Washer DIN 125-6		
12	ALLPA.93	1	Coupling,cable	23/05/2017	
13	51030005	2	Washer DIN 125-5		
14	24810913	1	Clamp,CABLE		
15	52101313	2	Bolt DIN 931 M10-50 8.8		
16	53038008	11	Washer DIN 6798-A 8		
17	52101263	8	Bolt DIN 931 M8-50 8.8		
18	40019030	3	Stud		
19	52120008	3	Nut DIN 934 M8 8.8		
20	52102257	4	Bolt DIN 933 M8-20 8.8		
21	54081020	2	Clamp DIN 3017 20-32/9 W4		
22	M87501927	1	Water Intake Hose (HQ) D. 19-27		
23	17211036	1	Raccord		
24	13211035	1	Exhaust Manifold Outlet Bend		
25	60121005	1	Water Trainer 1/2"		
26	58088283	2	Pastic Cable Zip Tie	27/02/2014	

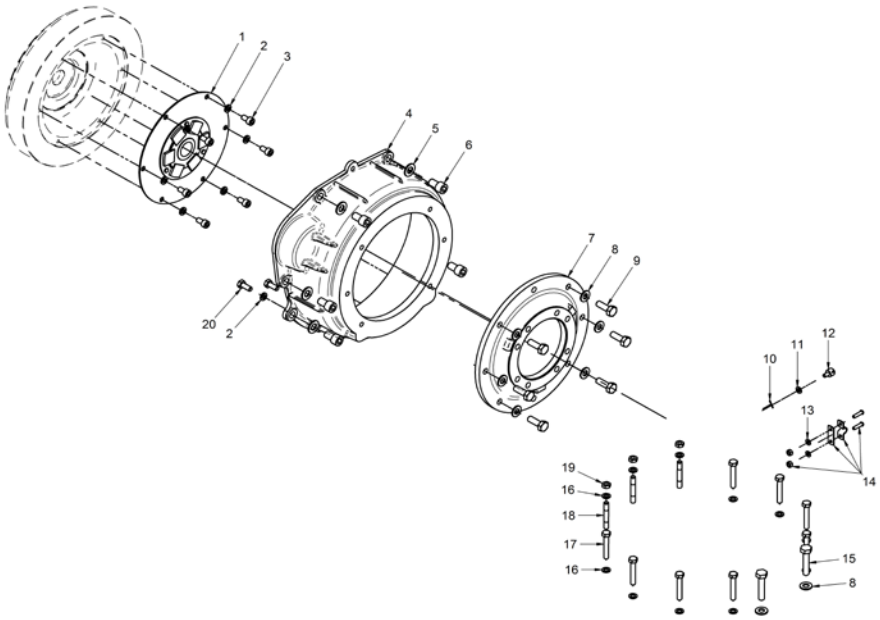

Instruments Panels

13817215.2			Price Supplement Panel TE3 MINI-17/29		
FIG.	REF.	QTY	DESCR.	FROM	UPTO
1	60938127.2	1	Panel TE3 MINI-17/29		
2	13817051	1	SENDER Holder		
3	60900985	1	Pressure Sensor		
4	TFH.1M.6.3.08	1	Straight Receptacle 1 Sec. Faston	09/06/2015	
5	60900063	1	Insulator Cap Faston 6.3		

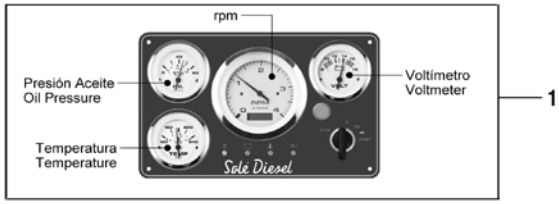

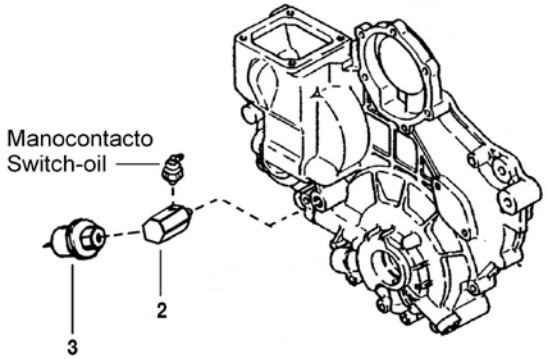

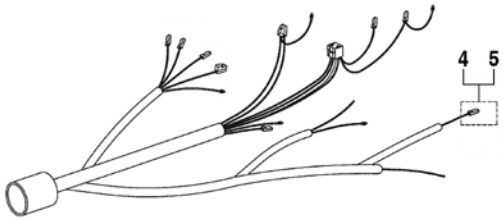

Instruments Panels

60938000RD			Kit 2nd Panel TE4 MINI-17/29 12V		
FIG.	REF.	QTY	DESCR.	FROM	UPTO
1	60938125.2	1	Panel TE2 MINI-17/29		
2	60938126.2	1	Panel TE4 MINI-17/29		
3	60900210.2	1	T Double Panel DERIVATION		

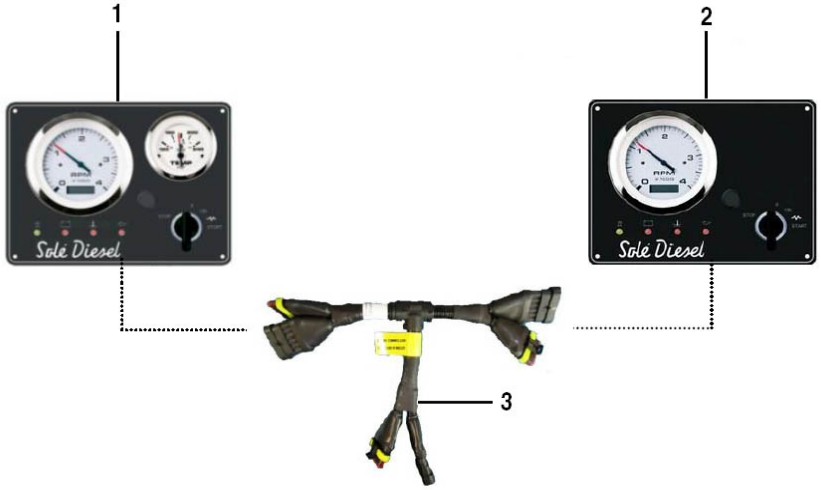

	13817110		Kit 2nd Alternator 28V/55A		
FIG.	REF.	QTY	DESCR.	FROM	UPTO
1	13110202	1	Pulley 2A (S)		
2	13817111	1	2nd Alternator Bracket		
3	13810034	1	Front Bracket		
4	13810033	1	Front Bracket		
5	13817112	1	Strap, Alternator		
6	51030010	3	Washer DIN 125-10		
7	52101326	1	Bolt DIN 931 M10-130 8.8		
8	53033010	1	Washer GROWER DIN 127-10		
9	52120010	1	Nut DIN 934 M10 8.8		
10	17217102.6	1	Belt Type AX 21		
14	17417024	1	Alternator 28V/55A		
15	51123010	1	Nut DIN 985 M10 5.6		
16	52102308	1	Bolt DIN 933 M10-25 8.8		
17	17417022	1	Pulley		
18	13817113	1	Spacer 8,5X25X12		
19	53033008	4	Washer GROWER DIN 127-8		
20	52102259	2	Bolt DIN 933 M8-30 8.8		
21	52203310	4	Bolt DIN 912 M10-1,25-35 12.9		
22	51030018	1	Washer DIN 125-18		
23	18017021	1	PAN,alternator L.H.		
NS	52120008	2	Nut DIN 934 M8 8.8 [NS]		

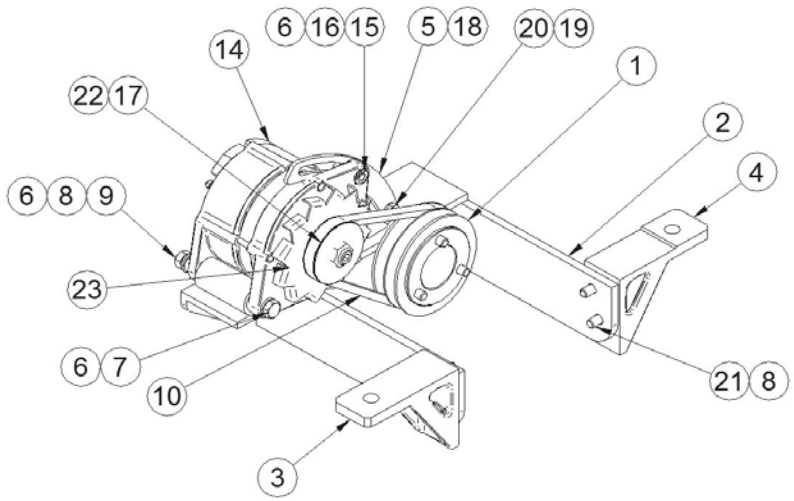

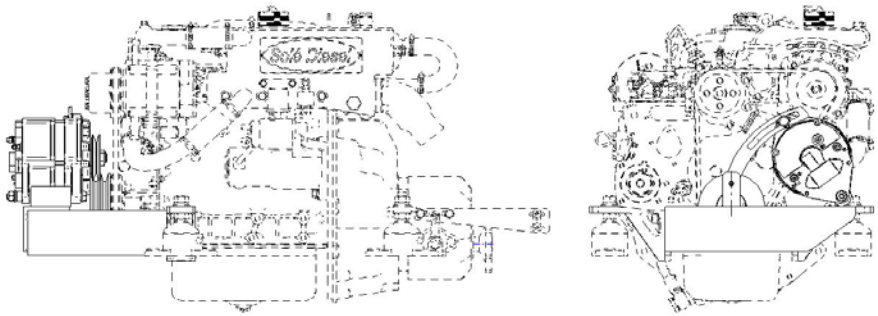

[NS] Not shown

	17617053		Kit Alternator 14V/95A ISKRA		
FIG.	REF.	QTY	DESCR.	FROM	UPTO
1	13827207.1	1	BRACE		
2	17617018	1	Alt. 14V/95A		
3	17617026	1	Belt Type SPZX 925		
4	13817012.7	1	Pulley		
5	13817016	1	Spacer 17X28X4		
6	13817017	1	Spacer 17X28X5,5	09/09/2015	
7	17217025	1	Spacer 10,25X25X31		
8	17417025	1	Spacer 13.5x10.2x11	09/09/2015	
9	51030010	1	Washer DIN 125-10		
10	53033010	1	Washer GROWER DIN 127-10		
11	52101324	1	Bolt DIN 931 M10-110 8.8		
12	51031008	1	Washer DIN 9021 8		
13	52102259	1	Bolt DIN 933 M8-30 8.8		
14	51030008	3	Washer DIN 125-8		
15	53033008	1	Washer GROWER DIN 127-8		
16	52120008	2	Nut DIN 934 M8 8.8		
18	51030006	2	Washer DIN 125-6		
21	52101166	1	Bolt DIN 931 M6-65 8.8		
NS	TR.25.8	1	Ring Terminal 25 Sec. [NS]		
NS	51030005	2	Washer DIN 125-5 [NS]		
NS	52120005	1	Nut DIN 934 M5 8.8 [NS]		
NS	52120006	1	Nut DIN 934 M6 8.8 [NS]		

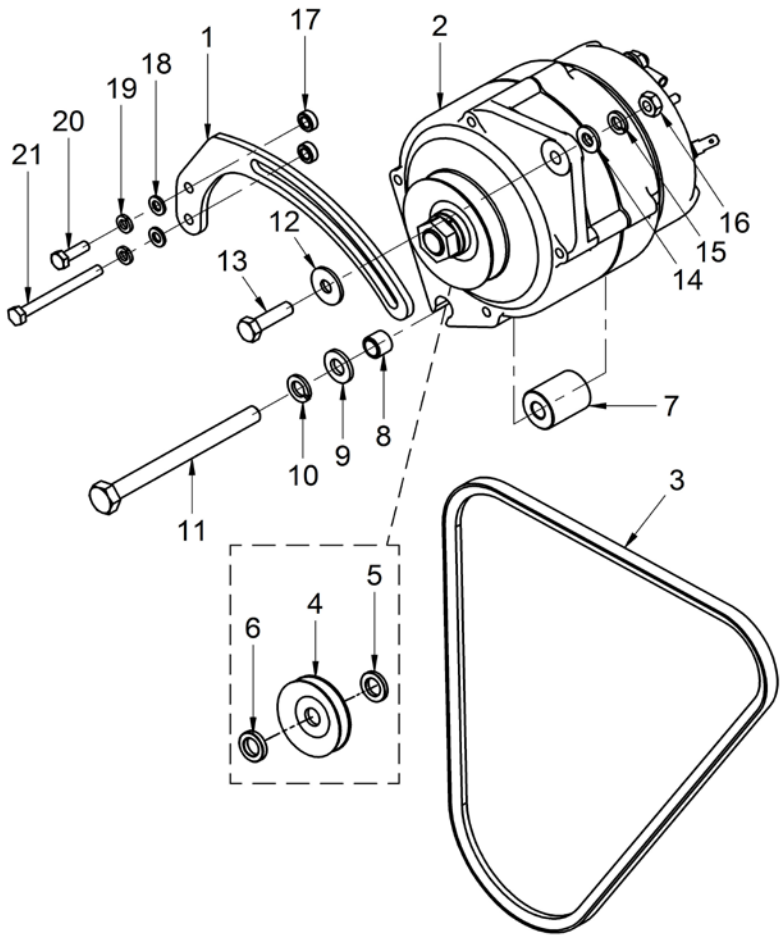

[NS] Not shown

17617053B			Earth Isolated Alternator 14V/95A Kit		
FIG.	REF.	QTY	DESCR.	FROM	UPTO
1	17617018B	1	Alt.14V/95A		
2	17217012	2	Bushing		
3	51030008	4	Washer DIN 125-8		
4	53033008	1	Washer GROWER DIN 127-8		
5	52120008	2	Nut DIN 934 M8 8.8		
6	17217025	1	Spacer 10,25X25X31		
7	19017111	1	Bush		
8	17217011	1	Bushing		
9	17417025	1	Spacer 13.5x10.2x11	09/09/2015	
10	51030010	1	Washer DIN 125-10		
11	53033010	1	Washer GROWER DIN 127-10		
12	52101325	1	Bolt DIN 931 M10-120 8.8		
13	51031008	1	Washer DIN 9021 8		
14	52102259	1	Bolt DIN 933 M8-30 8.8		
15	52101166	1	Bolt DIN 931 M6-65 8.8		
16	52102157	1	Bolt DIN 933 M6-20 8.8		
17	51030006	4	Washer DIN 125-6		
18	13827207.1	1	BRACE		
19	17617006	2	Spacer 6,5X12X5		
20	13817017	1	Spacer 17X28X5,5	09/09/2015	
21	13817012.7	1	Pulley		
22	13817016	1	Spacer 17X28X4		
23	17617026	1	Belt Type SPZX 925		
NS	TFM.6.3.T.5.I	1	Straight Receptacle 6.3 Faston [NS]		
NS	TR.10.8	1	Ring Terminal 10 Sec. [NS]		
NS	51030005	2	Washer DIN 125-5 [NS]		
NS	52120005	1	Nut DIN 934 M5 8.8 [NS]		

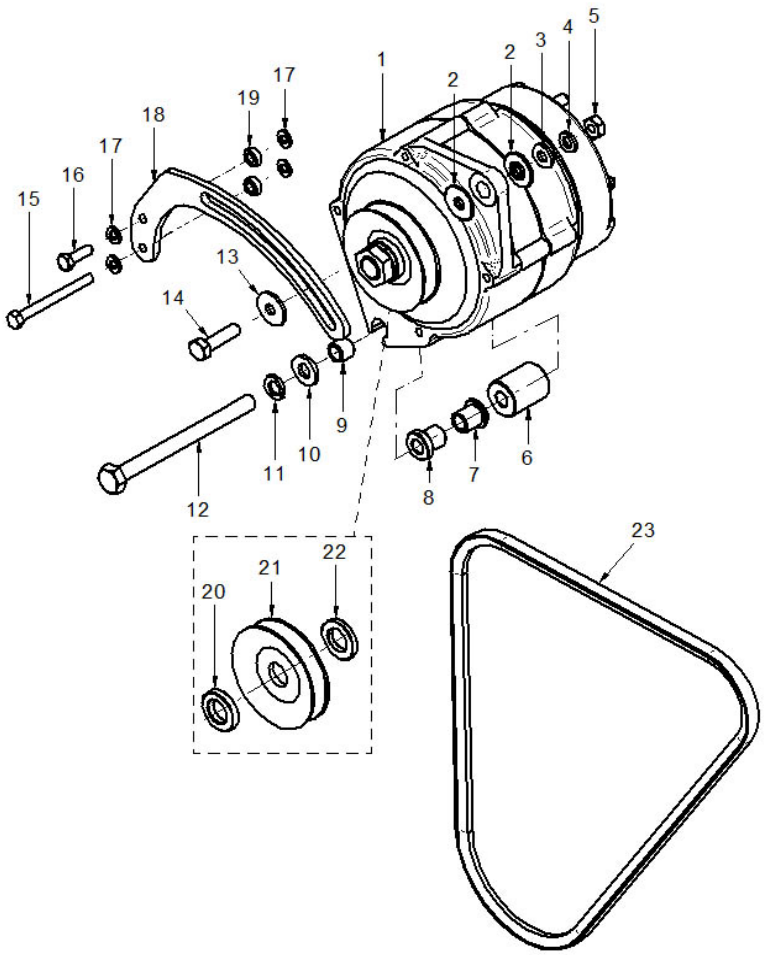

[NS] Not shown

	17617100		Kit 2nd Alternator 14V/90A		
FIG.	REF.	QTY	DESCR.	FROM	UPTO
1	13110202	1	Pulley 2A (S)		
2	13810005.1	1	Right, front bracket	09/10/2015	
3	13810006.1	1	Left, front bracket	09/10/2015	
4	17217019	1	Alternator 14V/90A		
5	17417020	1	Pulley Alternator		
6	17617100.1	1	Alternator Bracket		
7	17617100.2	1	Strap, Alternator		
8	51030006	4	Washer DIN 125-6		
9	51030008	1	Washer DIN 125-8		
10	51030010	2	Washer DIN 125-10		
11	51035010	1	Washer DIN 433 10		
12	52101326	1	Bolt DIN 931 M10-130 8.8		
13	52102158	2	Bolt DIN 933 M6-25 8.8		
14	52102259	1	Bolt DIN 933 M8-30 8.8		
15	52120006	2	Nut DIN 934 M6 8.8		
16	52120008	1	Nut DIN 934 M8 8.8		
17	52120010	1	Nut DIN 934 M10 8.8		
18	52203310	4	Bolt DIN 912 M10-1,25-35 12.9		
19	53033006	2	Washer GROWER DIN 127-6		
20	53033008	1	Washer GROWER DIN 127-8		
21	53033010	5	Washer GROWER DIN 127-10		
NS	17217100G	1	Belt Type [NS]		

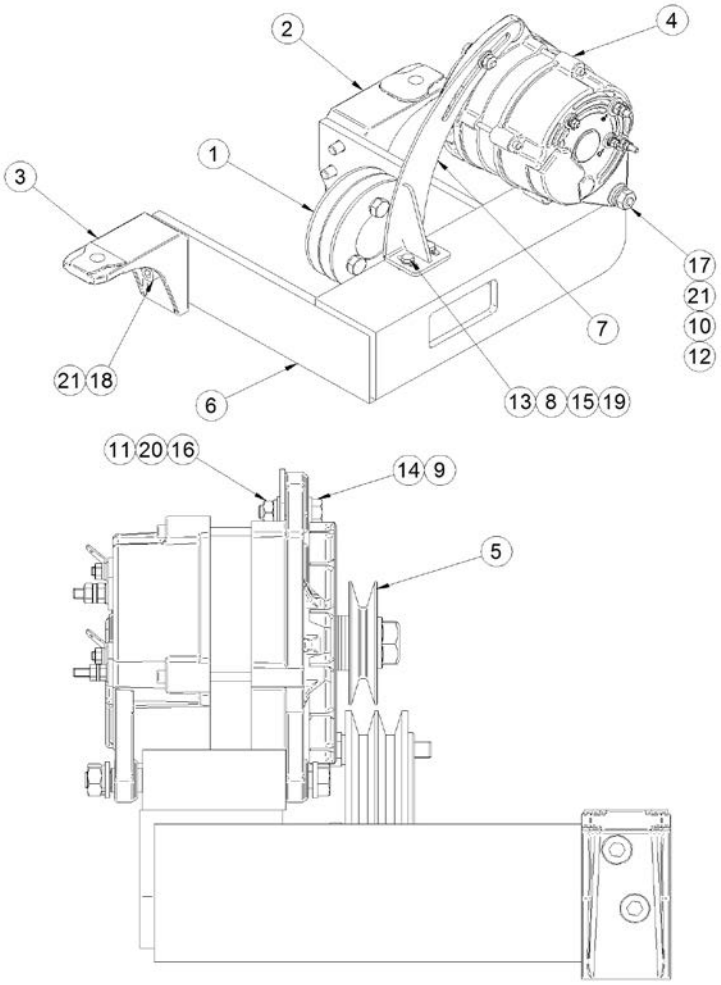

[NS] Not shown

17617200			Kit Wire Earth Isolated Alternator 14V/7		
FIG.	REF.	QTY	DESCR.	FROM	UPTO
1	19017104	1	Relay 12 V. Bipolar		
2	13817107	1	SUPORT RELAIS	21/01/2000	
3	51030010	2	Washer DIN 125-10		
4	52202307	2	Bolt DIN 933 M10-1,25-20 8.8		
5	51030006	4	Washer DIN 125-6		
6	52102154	2	Bolt DIN 933 M6-10 8.8	26/11/2005	
7	13019001	2	Clamp		
8	60900978	1	SWITCH, Oil PRESS		
9	56000069	1	Washer 14-20-1,5		
10	60900999	2	Connection M14X1,5 5/8" EXA.22 L=22		
11	60900982	1	Temperature SENDER		
12	56000073	2	Copper Washer 16-23-1,5		
13	60900972	1	High Coolant, 2 PoleS		
14	14419023	1	Ball JOINT		
16	15119015	1	CABLE Holder Ball		
17	13817012B	1	Alt. 14V/75A		
18	17117052	1	Oil Pressure Sensor Adaptor	29/09/2015	
19	51031008	2	Washer DIN 9021 8		
20	52102260	1	Bolt DIN 933 M8-35 8.8		
21	52102158	1	Bolt DIN 933 M6-25 8.8		
23	52120008	2	Nut DIN 934 M8 8.8		
24	13017013	2	DIVIDER Bushing		
25	17217012	2	Bushing		
26	13817114	1	Spacer 8,5X25X19		
27	51030008	2	Washer DIN 125-8		
NS	17417010	2	Bushing [NS]		
NS	17417014	2	Washer [NS]		
NS	52102155	2	Bolt DIN 933 M6-12 8.8 [NS]		
NS	52120005	1	Nut DIN 934 M5 8.8 [NS]		
NS	53033006	2	Washer GROWER DIN 127-6 [NS]		
NS	58088284	1	Pastic Cable Zip Tie [NS]		
NS	58088285	1	Pastic Cable Zip Tie [NS]		
NS	60900126	1	TERMINAL [NS]		
NS	60900130	1	Flag Receptable Faston Terminal [NS]		
NS	60900131	1	Insulation Flag Protective [NS]		

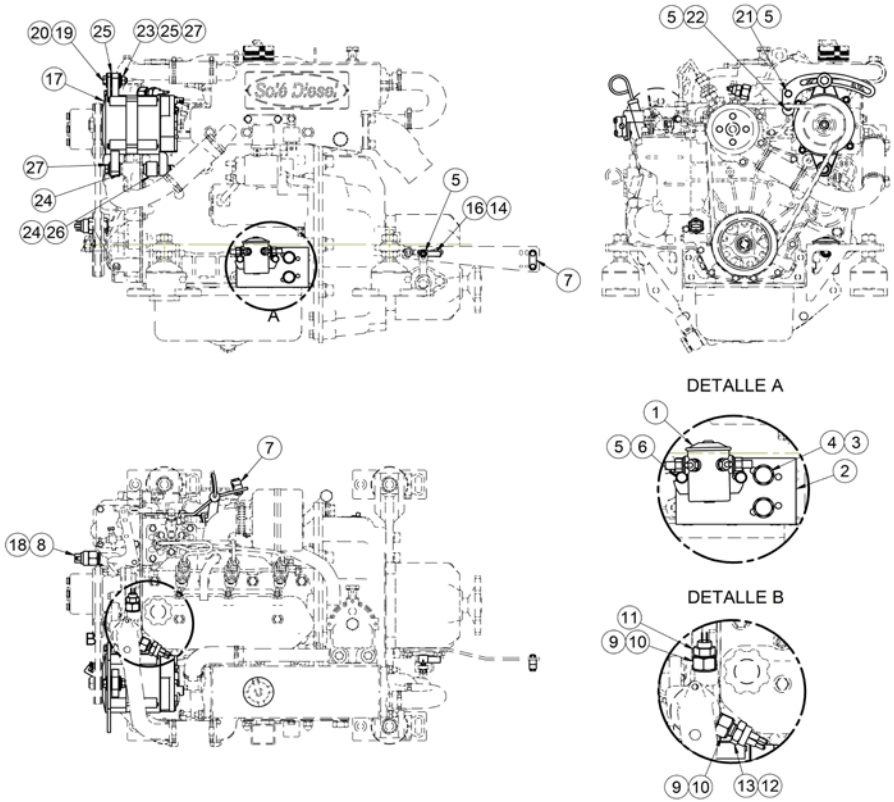

[NS] Not shown

17617200			Kit Wire Earth Isolated Alternator 14V/7		
FIG.	**REF.**	**QTY**	**DESCR.**	**FROM**	**UPTO**
NS	60900150	1	Wire [NS]		
NS	60900154	1	Wire [NS]		
NS	60938202R.2	1	MINI-17/29 E. Wiring EARTH ISOLATED [NS]		
NS	60939048	1	MASS BLACK TO Wiring START [NS]		

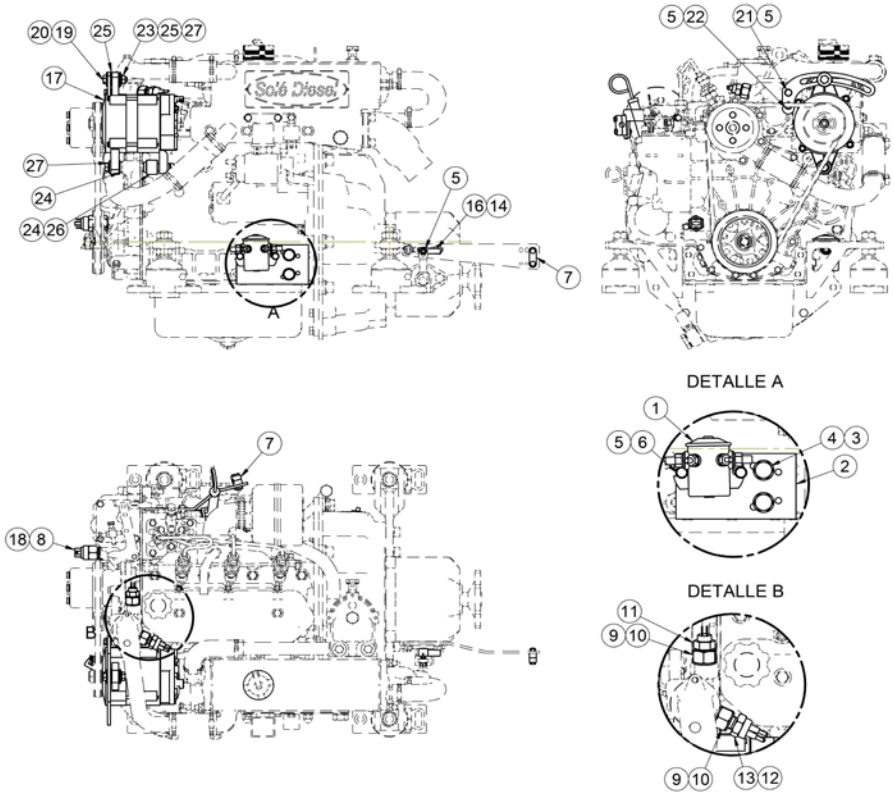

	24813510		Kit Water Leak Sensor & Alarm SP60 12V		
FIG.	REF.	QTY	DESCR.	FROM	UPTO
1	60938203	1	SPROP60 Water SYStem Alarm SYSTEM		
2	24813504	1	Water Alarm Sensor		

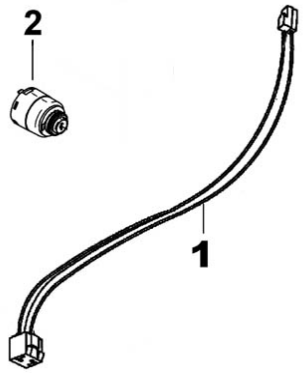

	13810009		Motor Bracket Width 185/187		
FIG.	REF.	QTY	DESCR.	FROM	UPTO
1	13810002E.1	1	RIGHT, front bracket		
2	13810001E.1	1	LEFT, front bracket		
3	13810037E	2	Support Rear		
NS	52101262	1	Bolt DIN 931 M8-45 8.8 [NS]	11/05/2016	

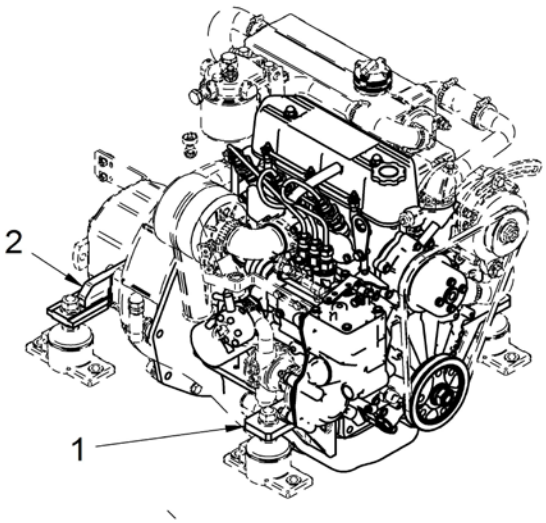

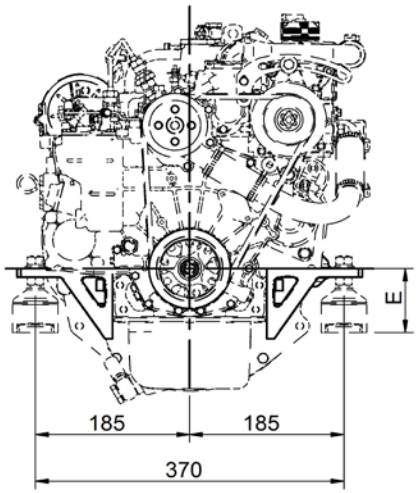

[NS] Not shown

Other Kits

	13810054		Motor Bracket Width 205		
FIG.	**REF.**	**QTY**	**DESCR.**	**FROM**	**UPTO**
1	13810052	1	Bracket, Front Left (Width 205)		
2	13810053	1	Bracket, Front Right (Width 205)		
3	13810010.4	2	Bracket, Rear (Width 205)		

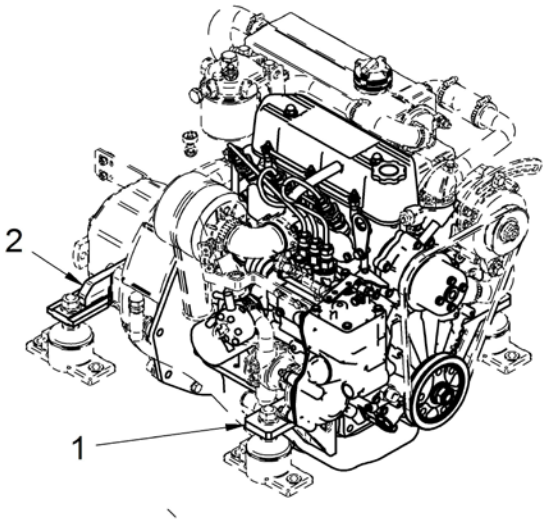

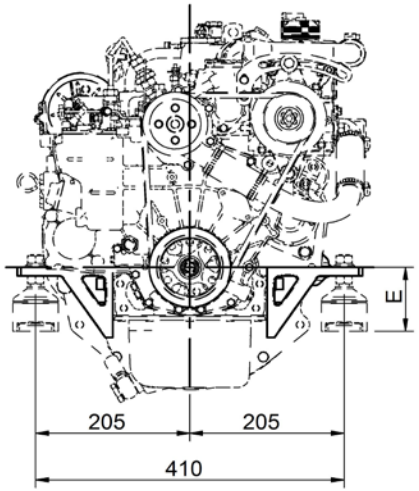

Other Kits

13810118S			Front Water Pomp MINI-17/29 Kit(Spline)		
FIG.	REF.	QTY	DESCR.	FROM	UPTO
1	13810118	1	Front Water Pump MINI-17/29 Kit Complete		

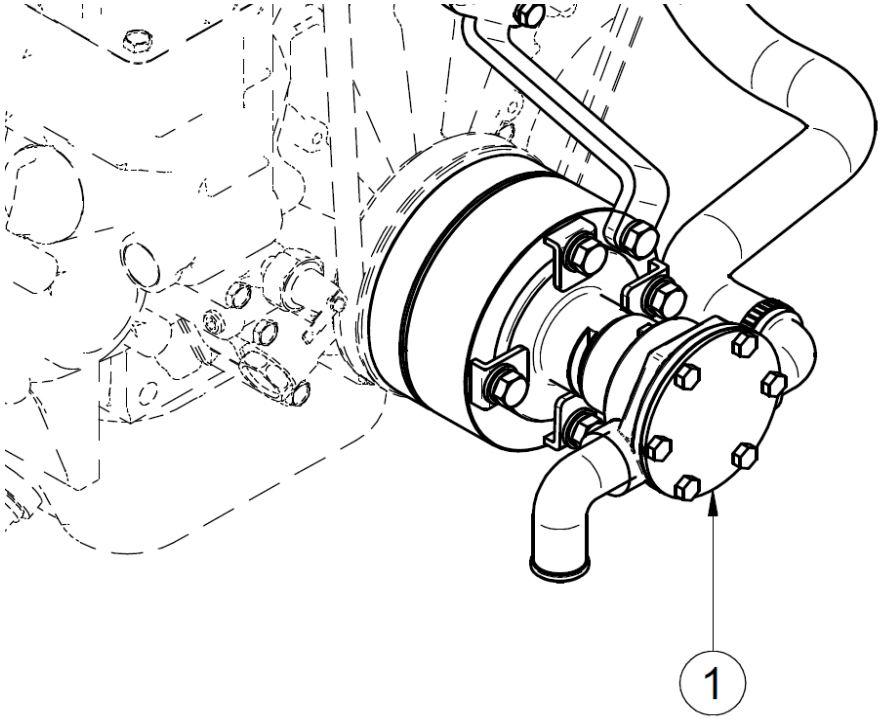

Other Kits

	13811157		Boiler Kit (S)		
FIG.	**REF.**	**QTY**	**DESCR.**	**FROM**	**UPTO**
1	13511050	1	NIPPLE,heater		
2	56000073	1	Copper Washer 16-23-1,5		
3	17124053	2	Joint		

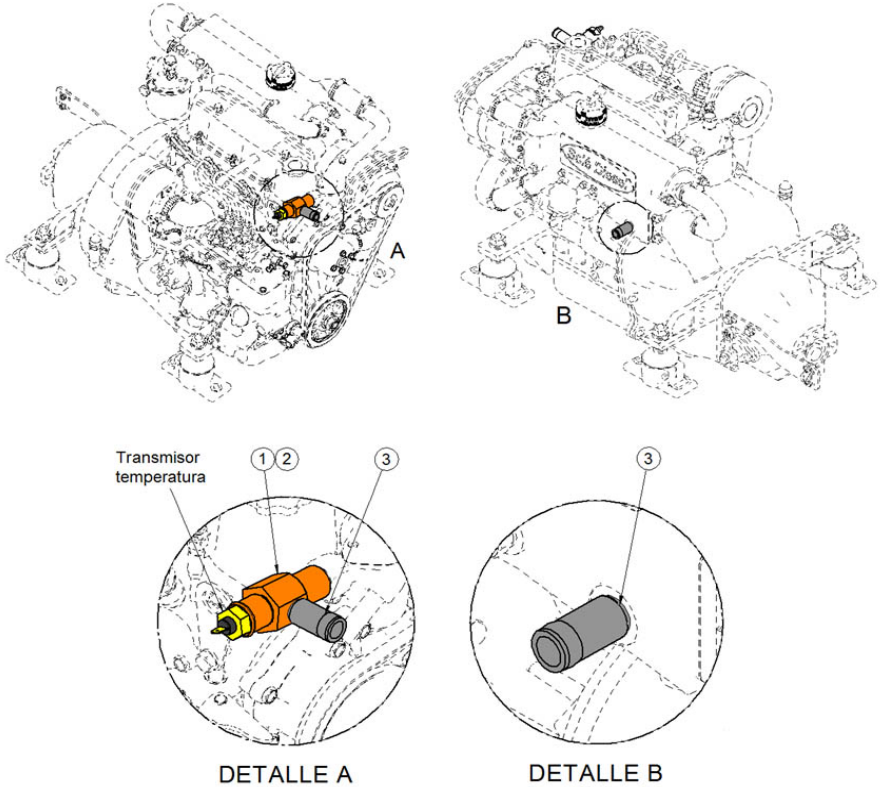

	13812010		Pression Gauge Kit		
FIG.	REF.	QTY	DESCR.	FROM	UPTO
1	13812013.1	1	Pressure Tap		
2	13812011	1	Flexible Hose F-M G1/4-M16x2		
3	13812012	1	Presion Gauge 0-10 bar		
4	13812014	1	Protective Rubber		

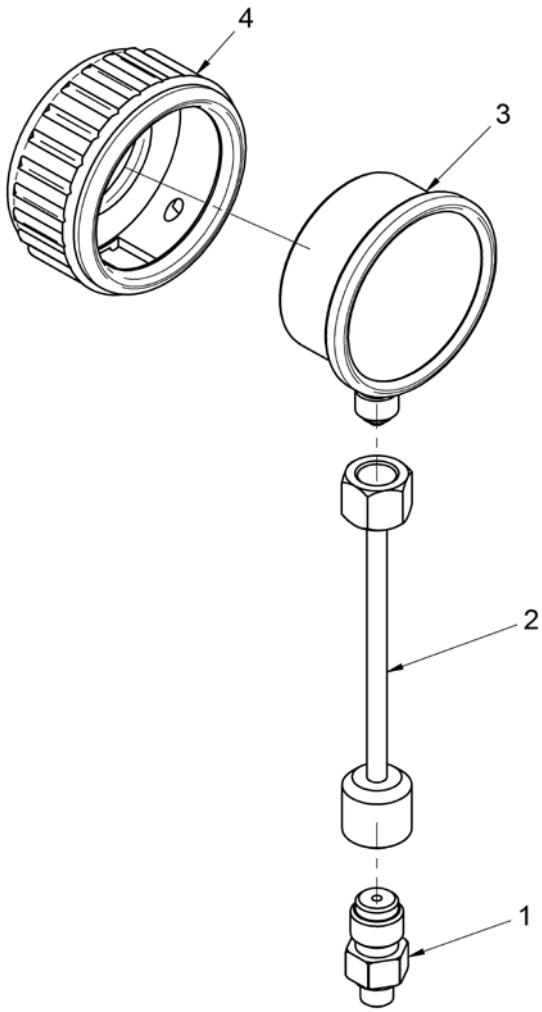

Other Kits

17012345			Kit Trolling Valve for TM-345/A		
FIG.	REF.	QTY	DESCR.	FROM	UPTO
1	24850050	1	Trolling Valve TM-345A		
2	17012024	1	Pipe		
3	17512017	1	Pipe, rev.oil Cooler		
4	14712015	2	Bolt,Coupling pipe oil		
5	57000375	4	Washer 17-22-1,5		
6	24810913	1	Clamp,CABLE		
7	14719115	2	Coupling,cable		
8	51051107	2	Pin DIN-94 1,6-16		
9	51030006	1	Washer DIN 125-6		
10	51030005	2	Washer DIN 125-5		

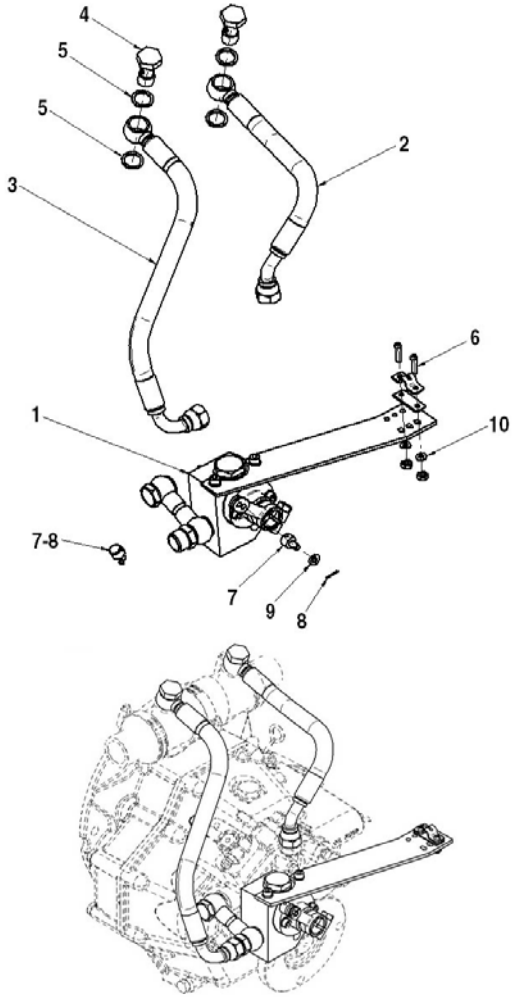

Exhaust System

	17613042		Exhaust Flange (S)		
FIG.	**REF.**	**QTY**	**DESCR.**	**FROM**	**UPTO**
1	17613042.1	1	Exhaust Flange (S)		

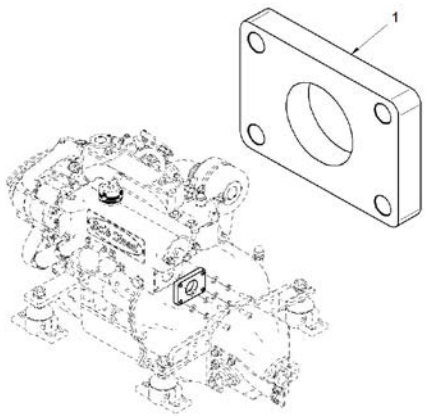

Exhaust System

17613115C			Dry Exhaust SYStem, Elbow (S)		
FIG.	REF.	QTY	DESCR.	FROM	UPTO
1	17613115	1	Kit Dry Exhaust With Flexible Pipe (S)		
2	13211035	1	Exhaust Manifold Outlet Bend		

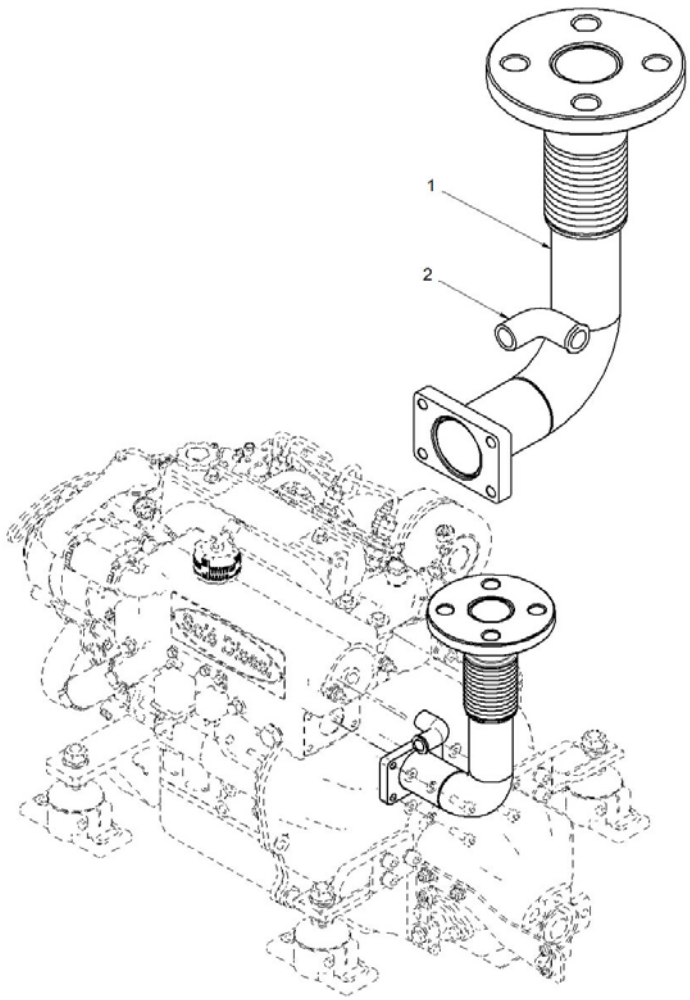

Exhaust System

17613118			Kit Dry Exh. Flexible Pipe & Silencer(S)		
FIG.	REF.	QTY	DESCR.	FROM	UPTO
1	17613115	1	Kit Dry Exhaust With Flexible Pipe (S)		
2	52120016	4	Nut DIN 934 M16 8.8		
3	53033016C	4	Washer	10/12/2009	
4	51030016	8	Washer DIN 125-16		
5	13413016	1	Gasket		
6	52101465	4	Bolt DIN 931 M16-60 8.8		
7	13813018	1	Exhaust Muffler		
8	13413019	1	RAINCover		

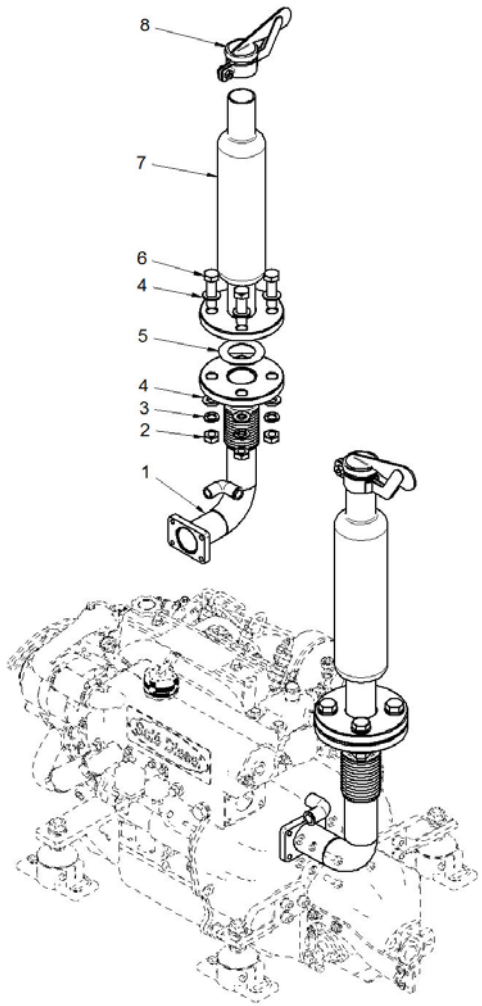

Power Take-off Pulley

	13110101		Pulley 2B (S)		
FIG.	**REF.**	**QTY**	**DESCR.**	**FROM**	**UPTO**
1	13110101.1	1	Pulley 2B		
2	53033010	3	Washer GROWER DIN 127-10		
3	52201315	3	Bolt DIN 931 M10-1,25-60 8.8		

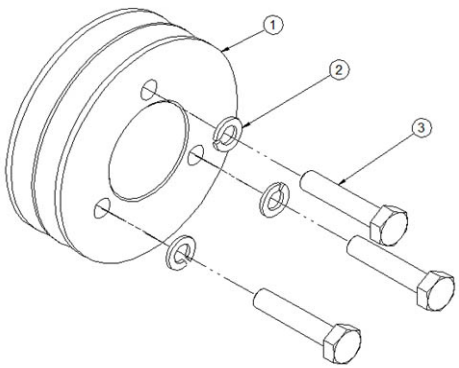

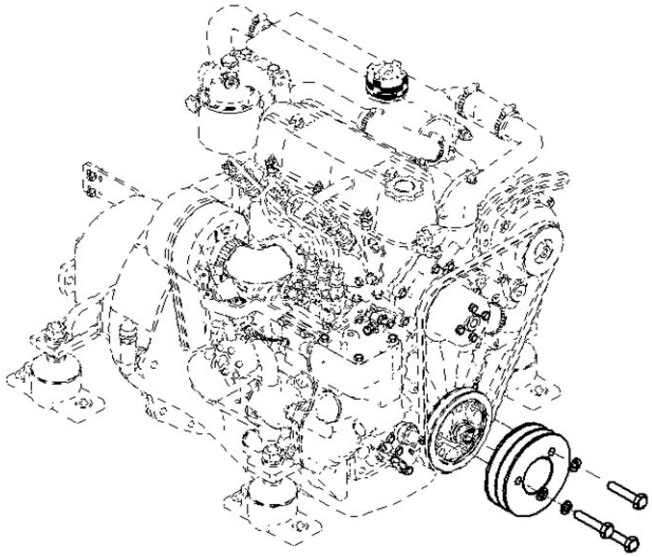

Power Take-off Pulley

	13110202		Pulley 2A (S)		
FIG.	**REF.**	**QTY**	**DESCR.**	**FROM**	**UPTO**
1	13110202.1	1	Pulley 2A	15/06/2016	
2	53033010	3	Washer GROWER DIN 127-10	15/06/2016	
3	52201313	3	Bolt DIN 931 M10-1,25-50 8.8	15/06/2016	

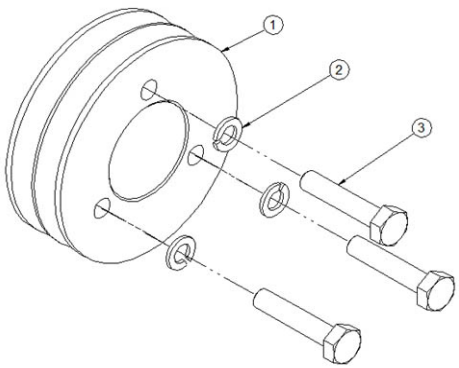

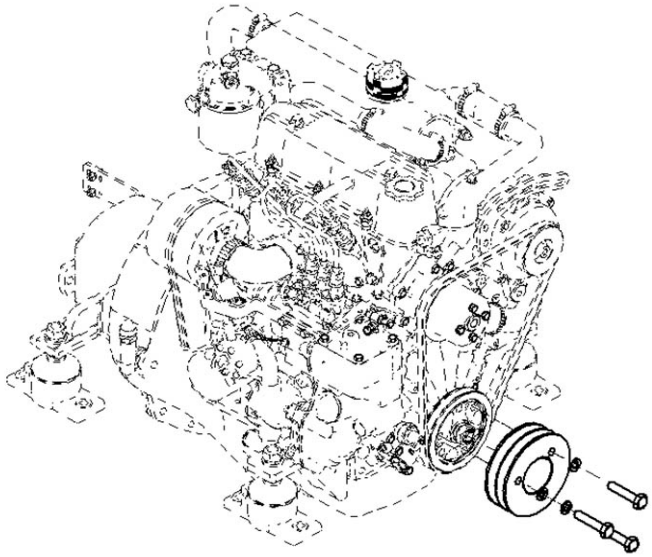

Kit Keel Cooling

17611200.1			Kit Keel Cooling & Dry Exhaust (S)		
FIG.	REF.	QTY	DESCR.	FROM	UPTO
1	13120046	1	Cover Oil Pump SH		
2	13120047	1	Gasket Water Pump		
3	13911002	2	Cover		
4	13811007	2	O-Ring D. 57X2,5		
5	17613014	1	Gasket		
6	17613042	1	Exhaust Flange (S)		
NS	13817011	1	Bracket [NS]		
NS	52202358	1	Bolt DIN 933 M12-1,25-25 8.8 [NS]		
NS	53033012	1	Washer GROWER DIN 127-12 [NS]		

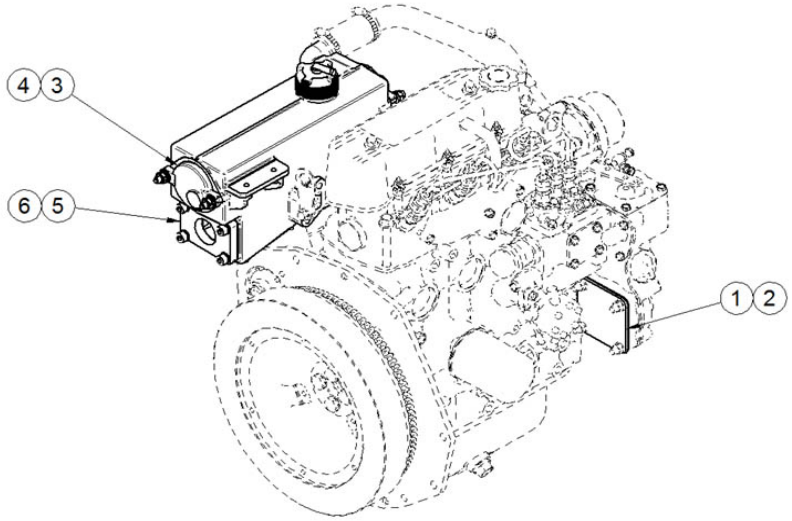

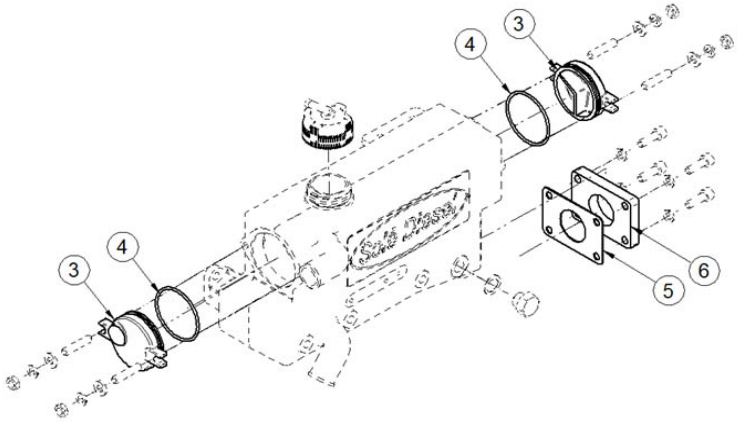

[NS] Not shown

Instrument panel for engines TE1

	60930120.2		TE1 Panel 12V		
FIG.	REF.	QTY	DESCR.	FROM	UPTO
1	54108003	2	Bolt DIN 84 M3-8 INOX.		
2	60900118	1	Fuse 10 A.		
3	60900301.2	1	Integrated Circuit Plate 12V Protection	23/06/2015	
4	60930006	1	Gasket Panel		
5	60900037	1	Key-Locking		
6	60900038	1	Cover,KEY		
7	60930005	1	Panel N.1		
8	60900121	1	FuseHolder, panel		
NS	60900037.2	1	Connector [NS]		
NS	60900059	2	Cover [NS]		

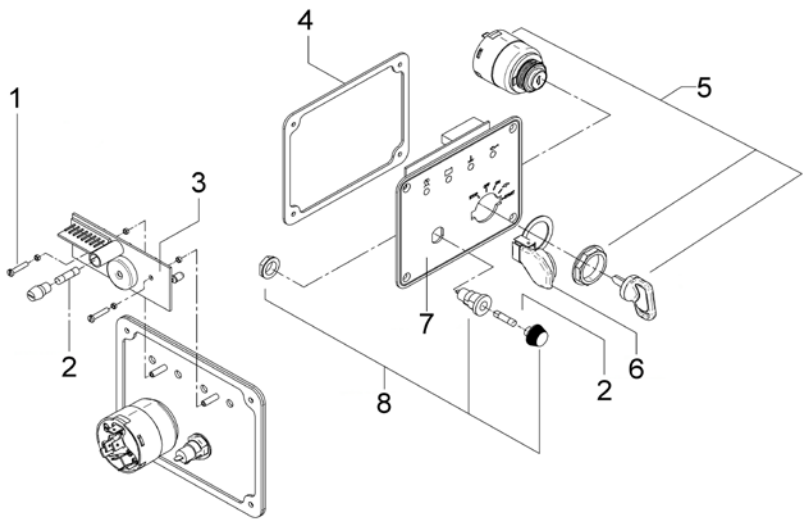

[NS] Not shown

Kits NMEA 2000 - one engine

	61438100		Kit SDC 2000 MINI-17/29 12V		
FIG.	**REF.**	**QTY**	**DESCR.**	**FROM**	**UPTO**
1	61400200	1	Kit SDC 2000 24V Standard		
NS	60900091	2	MICRO Relay 12V 12-20 [NS]		

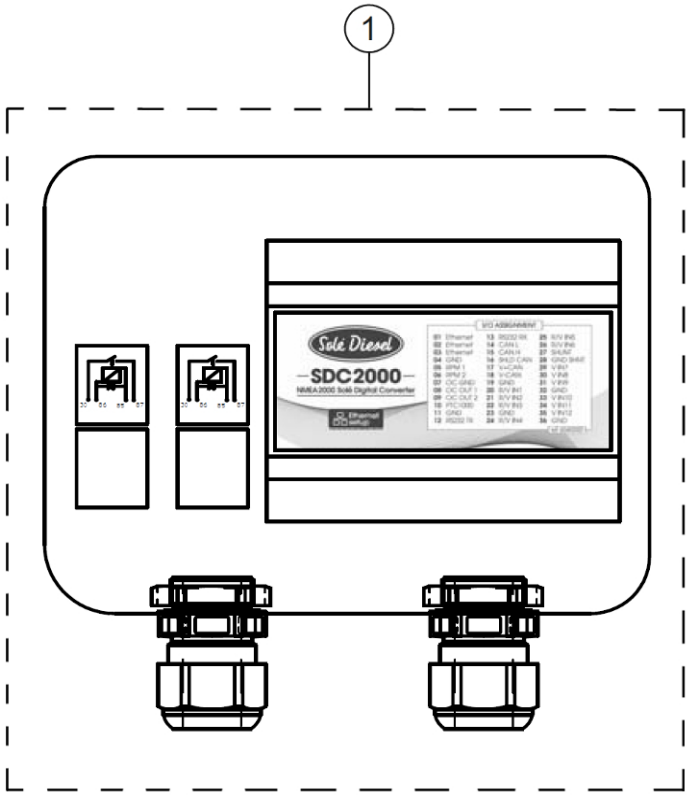

[NS] Not shown

Kits NMEA 2000 - one engine

61438200			Kit SDC 2000 MINI-17/29 24V		
FIG.	**REF.**	**QTY**	**DESCR.**	**FROM**	**UPTO**
1	61400200	1	Kit SDC 2000 24V Standard	15/06/2016	
NS	60900092	2	MICRO Relay 24V 24-10 [NS]	15/06/2016	

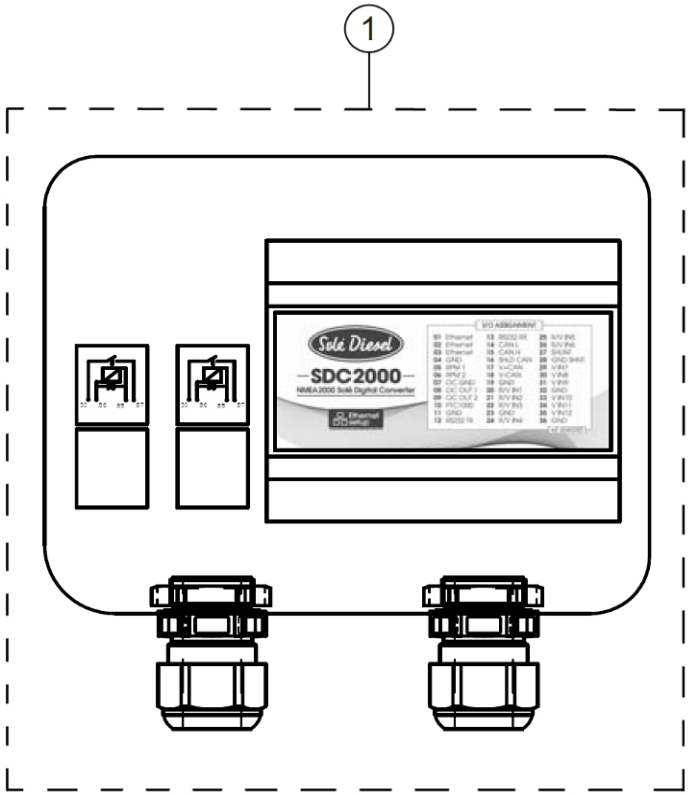

[NS] Not shown