Engine Mini-29 v6

VERSION 2018-2

SPARE PARTS MANUAL

PARTS LIST CATALOGUE

NORMS TO PLACE AN ORDER:

For fast and more efficient service, please specify the following information on spare parts orders that must be preferably done by FAX or e-mail as specified below:

1- Engine model: As shown in identification plate

2- Engine serial number: As shown in identification plate and stamped on crankcase

3- Item description + part number + quantity required

Spare parts requests must be adressed to:

recambios@solediesel.com

Telf.: +34 93 775 44 05

Fax: +34 93 775 30 13

The components shown in the catalog have:

- Figure: Number by which they are represented in scheme
- Description: Trade name of the component
- Quantity: Total number of parts used in the assembly of the part represented (may differ from the total minimum quantities)

Hoses, indicates the total length in meters

The diagrams shown in this catalog of spare parts, have only the purpose to identify the piece in question, its representation is not meaningful and may differ from the actual piece.

In case of doubt, contact Solé Diesel, or your authorized dealer.
The parts i / or references in this catalog are subject to change without notice.

SOLÉ, S.A.

C-243b, Km, 2 - P.O. BOX 15

08760 Martorell (Barcelona) Spain

Download the latest version of this manual HERE

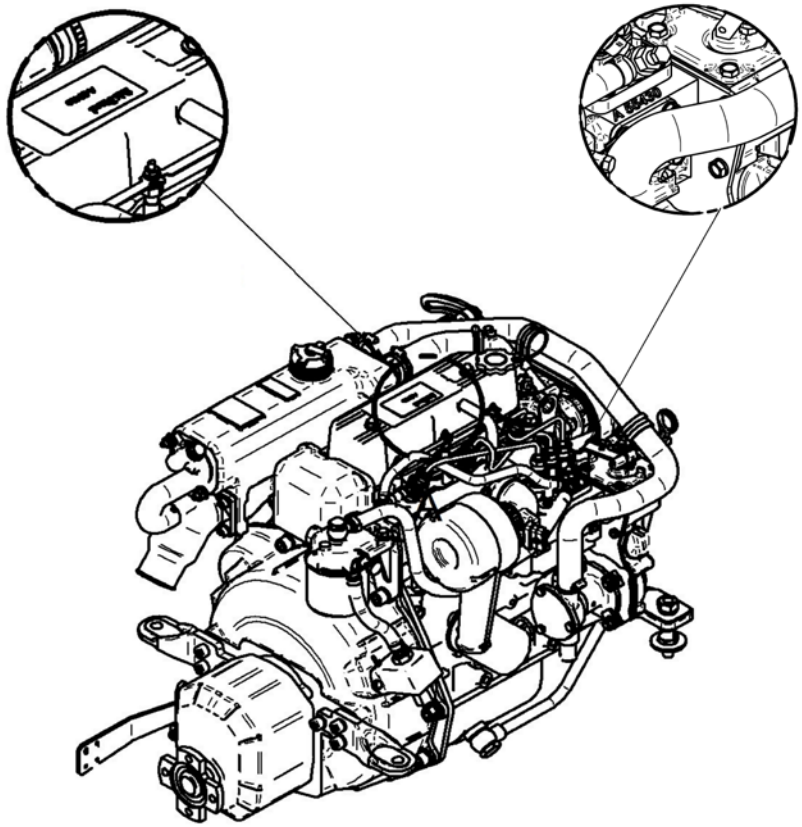

Contents

Engine Body
Cylinder Head
Rocker Cover and Breather
Valve Drive
Timing Parts
Gear Case
Cranckcase
Piston & Connectiong Rod
Crankshaft & Flywheel
Oil System
Oil Pan
Engine Brackets
Belt Protection

Inlet & Exhaust
Inlet

Cooling System
Water Pump
Cooler Pipes
Water Cooler Assy MINI-29 v6
1/2" Pump Water, Set
Wet Exhaust

Fuel System
Fuel Pipe
Injection Nozzle
Fuel Injection Pump
Governor Parts
Fuel Supply Parts

Electrical System
Kit Alternator 14V/75A
Starter Assy
Electrical Wiring
SVT 20 MINI-17/29 Panel
SVT 30 MINI-17/29 Panel

Maintenance Kit
Kit Gasket
Pipe Rubber Set,water line 6 V.
Repair Kit Water Pump 1/2"

TM-345A Gearbox
Sheet 1/4
Sheet 2/4
Sheet 3/4
Sheet 4/4
Maintenance Kit

TM-345 Gearbox
Sheet 1/4
Sheet 2/4
Sheet 3/4
Sheet 4/4
Maintenance Kit

SP60 S.Drive
Sheet 1/4 SP60 S.Drive V1
Sheet 2/4 SP60 S.Drive V1
Sheet 3/4 SP60 S.Drive V1
Sheet 4/4 SP60 S.Drive V1
Sheet 1/4 SP60 S.Drive V2
Sheet 2/4 SP60 S.Drive V2
Sheet 3/4 SP60 S.Drive V2
Sheet 4/4 SP60 S.Drive V2
Maintenance Kit

Gearbox TMC-40P
Sheet 1/2
Sheet 2/2
Maintenance Kit

Gearbox TMC-60P
Sheet 1/2
Sheet 2/2
Kit de Service

Gearbox TMC-60A
Sheet 1/2
Sheet 2/2
Kit de Service

Elements Supports
Motor Bracket, Width 180
Motor Bracket, Width 185
Motor Bracket, Width 205

Motor Bracket
Kit Replace MINI-17/29 v6 Supports to v5

Kit Gearbox
Kit S-Drive VOLVO 130S
Kit S-Drive VOLVO 120S
Kit S-Drive VOLVO 100S
Kit S-Drive SD20 YANMAR
Kit GearBox VOLVO MS-2 & MS-2B
Kit GearBox TMC-40P
Kit GearBox RONIM-5
Kit S-Drive VOLVO 110S
Kit S-Drive VOLVO 120SB/120SC/120SE
Kit S-Drive BUKH DV10 & DV20
Kit GearBox TM-345/345A
Kit GearBox ZF 15 MIV
Kit GearBox TMC-60
Kit S-Drive SELVA
Kit GearBox TMC/ZF/PRM
Kit S-Drive TECHNO.SP60

Electrical System
Kit 2nd Alternator 14V/90A
Kit Wire Earth Isolated Alternator 14V/7
Kit Water Leak Sensor & Alarm SP60 12V

Other Kits
Front Water Pomp MINI-17/29 Kit(Spline)
Boiler Kit (S)
Pressure Gauge Kit 10 BAR
Kit Trolling Valve for TM-345/A
Kit Conversion MINI-1 to MINI-29 v6
Kit Cooler Assy TMC-60
Kit Cooler Assy TMC-60

Exhaust System
Exhaust Flange (S)
Dry Exhaust SYStem, Elbow (S)
Kit Dry Exh. Flexible Pipe & Silencer(S)

Power Take-off Pulley
Pulley 2B (S)
Pulley 1B (S)
Pulley 2A (S)

Kit Keel Cooling
Kit Keel Cooling & Dry Exhaust (S)

Kit Instrument Panel SVT
Suplement Panel SVT 30 MINI-17/29
SVT 20 Panel 12V + Exh. Temp. Alarm Kit
SVT 30 Panel 12V + Exh. Temp. Alarm Kit
Kit 2nd Panel SVT 40 MINI-17/29 12V

SVT 10 Panel
SVT 10 Panel 12V

Kits NMEA 2000 - one engine
Kit SDC 2000 MINI-17/29 12V

Engine Body

D_MIB1_1_1			Cylinder Head		
FIG.	REF.	QTY	DESCR.	FROM	UPTO
1	17610008	2	HANGER,Engine		
2	17621001.4	1	Head Assy,Cylinder		
2A	13520013	1	Cap,SealING		
2B	13821012	3	Cap		
2C	17621002.4	6	Guide Valve		
3	17621004	1	Gasket,Cylinder Head		
4	13821005	8	Bolt,cylinder head		
5	17621013.4	3	Bolt,cylinder head [NP]		
6A	52102256	2	Bolt DIN 933 M8-15 8.8		
6B	53033008	2	Washer GROWER DIN 127-8		
7	17621011.4	1	Plug TAPER		

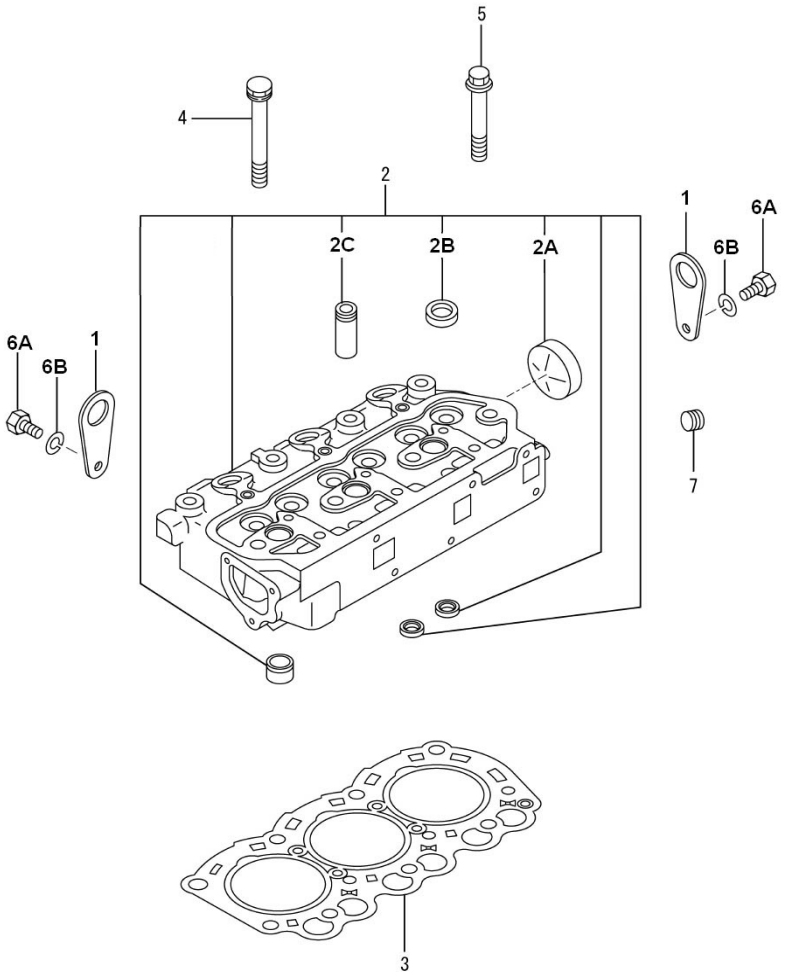

[NP] Not provided

D_MIB1_1_2			Rocker Cover and Breather		
FIG.	REF.	QTY	DESCR.	FROM	UPTO
1	17621009	1	Cover Assy,Rocker		
1A	17621010	1	Rocker Cover Gasket		
3	17621018	2	Nut		
4	51030018	2	Washer DIN 125-18		
6	17621003	1	Cap Oil FILLER		
7	17621006.4	1	Hose BREATHER		

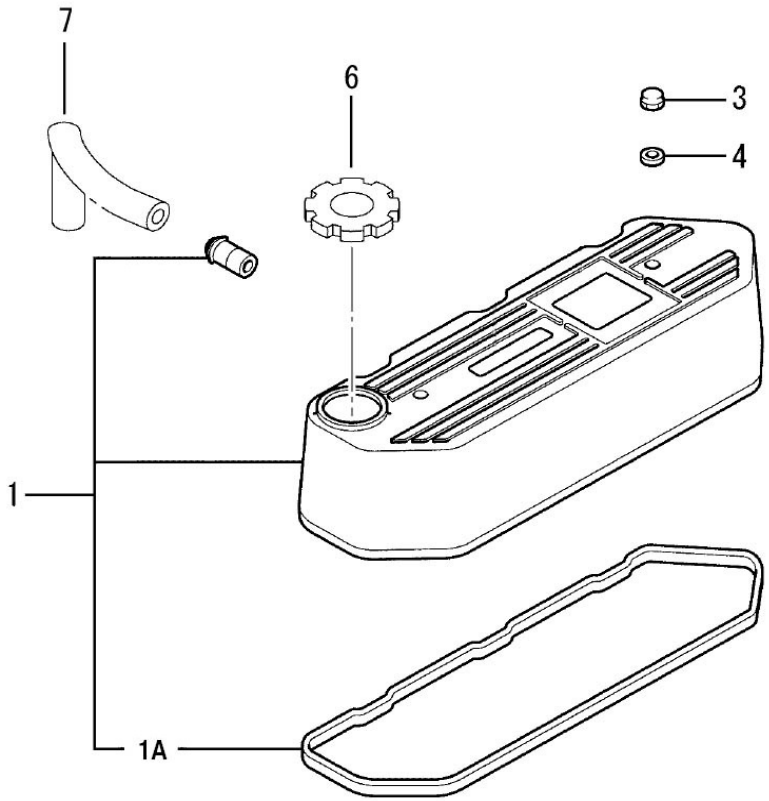

Engine Body

D_MIB1_1_3			Valve Drive		
FIG.	REF.	QTY	DESCR.	FROM	UPTO
1	13822069	6	Cap Stem		
2	(*)	1	Not available [NP]		
2A	17622046	1	Shaft Assy,Rocker		
2B	17622048	3	Bracket,Rocker Shaft		
2C	17622042	3	ARM,Rocker Inlet		
2D	17622045	3	ARM,Rocker Exhaust		
2E	17622070.4	1	Pin GROOVED		
2F	17622047.4	2	Spring Rocker SHAFT		
2G	52120006	6	Nut DIN 934 M6 8.8		
2H	53040012	2	CIRClip DIN 471 E-12		
2I	13822044	6	Screw Adjusting		
3	17622055	3	Intake Valve		
4	17622056	3	Exhaust Valve		
5	13822058	6	Retainer Valve SP		
6	17622059.4	12	LOCK Valve		
7	13222054	6	Seal Valve Stem		
8	17622053	2	Bolt,Rocker STAY		
9	17622061.4	6	Tappet [NP]		
10	17622041.4	6	ROD PUSH		
11	52101265	1	Bolt DIN 931 M8-60 8.8		
12	53033008	3	Washer GROWER DIN 127-8		
13	17622051.4	3	Washer		
14	17622057	6	Spring,Valve		

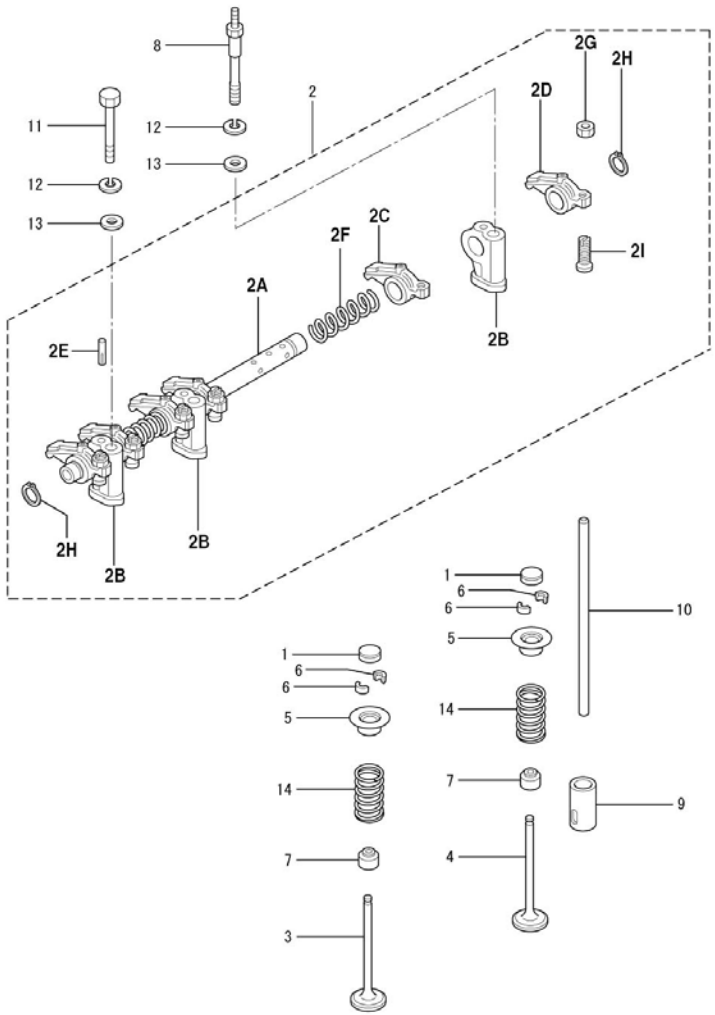

[NP] Not provided

Engine Body

D_MIB2_1_4			Timing Parts		
FIG.	REF.	QTY	DESCR.	FROM	UPTO
1	13822033	1	Washer CamShaft Stop		
2	17622067.4	1	Bearing Ball		
3	17622035	1	CamShaft		
4	17622036.4	1	KEY		
5	53040016	1	CIRClip DIN 471 E-16		
6	17622068.4	1	Bearing Ball		
7	(*)	1	Not available [NP]		
8	17622060.4	1	Key, Sunk		
9	13822066	1	Ball Bearing 6005-C3		
10	13822040.4	1	Shaft Fuel Injection Pump [NP]		
11	13922065G	1	Gear Oil Pump		
12	53040020	1	CIRClip DIN 471 E-20		
13	17622034.4	1	Plate DISTANCE		
14	17622038.4	1	Gear Assy,IDLER Z=40		
15	17622043.4	1	Gear,Fuel INJ.Pump Z=52		
16	52102155	1	Bolt DIN 933 M6-12 8.8		

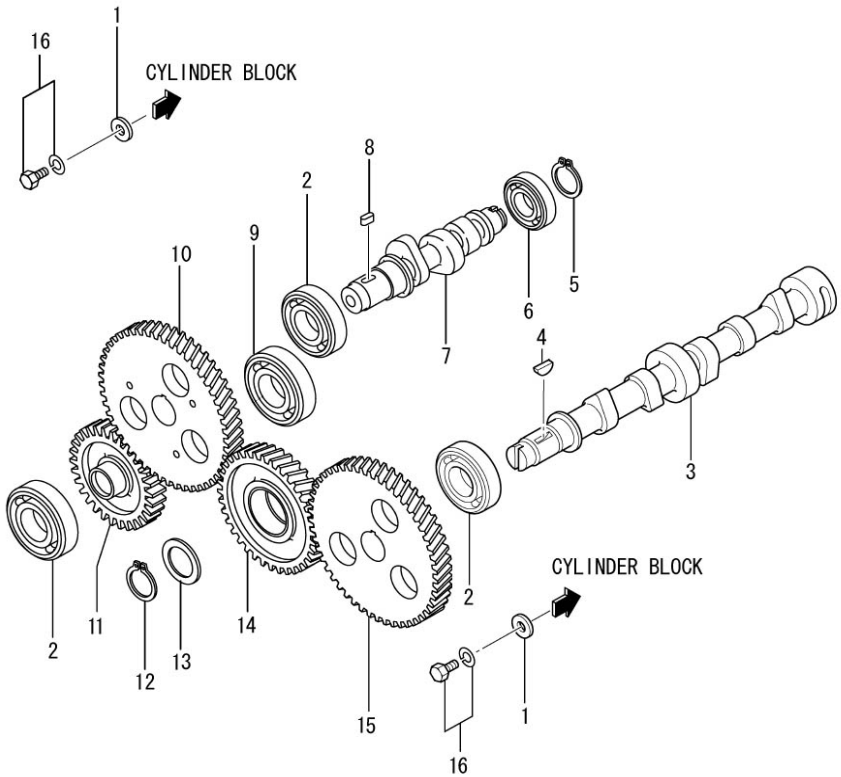

[NP] Not provided

Engine Body

D_MIB1_1_5			Gear Case		
FIG.	REF.	QTY	DESCR.	FROM	UPTO
1	13820045	1	Cap SealING (20)		
2	17620035.4	1	Case Gear		
2A	17621011.4	1	Plug TAPER		
2B	(*)	1	Not available [NP]		
2C	13224045	1	Plug		
2D	17620052.4	1	Housing Oil Pump		
2E	17221043	3	Bolt,W/Washer		
2F	13820013.4	1	Plug		
2G	13120032	1	Washer 18-23-1,5 [NP]		
2H	13224043	1	Plunger		
2I	13824044	1	Spring RELIEF		
2J	13820050	1	Gear Oil Pump INN		
2K	13820051	1	Gear Oil Pump OUT		
3	17620040.4	1	Gasket Gear Case		
4	13820039	1	Oil Seal		
5	52102160	3	Bolt DIN 933 M6-35 8.8		
6	52102164	4	Bolt DIN 933 M6-55 8.8		
7	52102166	1	Bolt DIN 933 M6-65 8.8 CINCADO		
8A	52102156	4	Bolt DIN 933 M6-16 8.8		
8B	53033006	4	Washer GROWER DIN 127-6		
9	13820044	2	O-Ring D. 11X2,5		
10	13820037	1	Housing Pump Gear		
11	13820038	1	Gasket Housing		
12	17621003.4	1	Cap Oil FILLER		
12B	13721007	1	O-Ring D. 30X3		
14	17122051	1	Bolt, w/washer		
15	13220043	1	Stud L 34		
16	17120049	4	Nut M8		
17	53033008	4	Washer GROWER DIN 127-8		
18	13220042	3	Stud L 54		

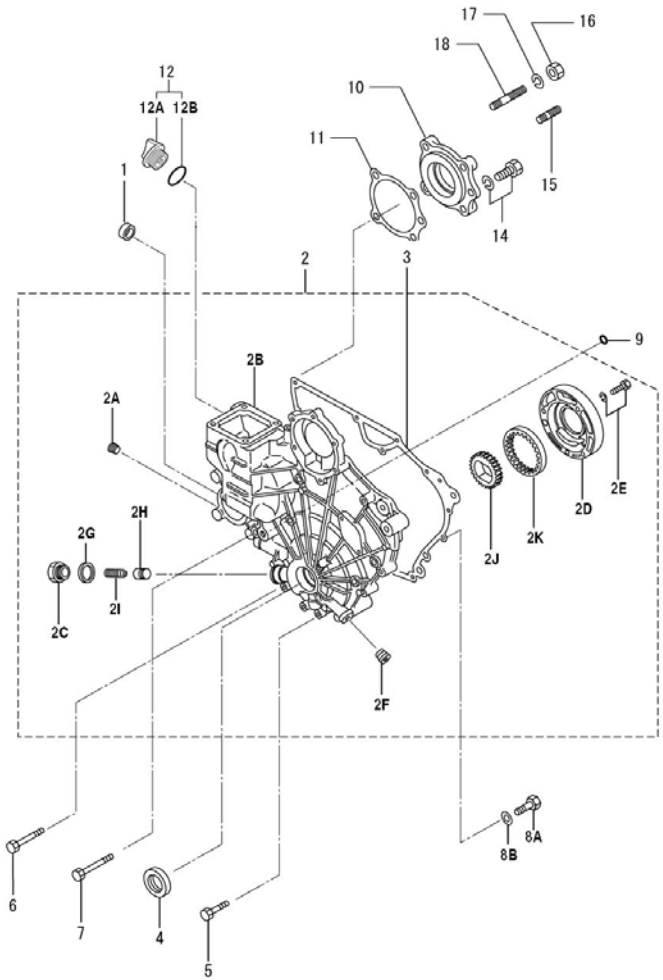

[NP] Not provided

Engine Body

D_MIB3_1_6			Cranckcase		
FIG.	REF.	QTY	DESCR.	FROM	UPTO
1	13820011	1	Cover		
2	17620012.4	1	Gasket Cover		
3	(*)	3	Not available [NP]		
4A	13820009.1	8	Bolt Bearing Cap		
4D	13220012	2	Cap Sealing		
4E	13520013	3	Cap,SealING		
5	17620013.4	3	Plug Taper 1/16		
6	17620036.4	2	Pin Dowel		
7	17620014.4	1	Shaft IDLER		
8	17620007.4	1	Guide		
9	17620020.4	1	Pin		
10	13820013	1	Plug Expansion		
11	17620009.4	2	Bushing		
12	17620021.4	1	Bushing		
13	17620022.4	2	BUSHING,KNOCK		
14	17620010.4	3	Bushing		
15	17620023.4	1	Plug TAPER		
16	13820002	4	Seal Side		
17	13820017	1	Plate, Front		
18	13822060.4	1	Key, Sunk		
19	17620018.4	1	Gasket Front Plate [NP]		
20	17620016.4	1	Gasket Oil Seal C		
21	13820008	1	Seal Oil		
22	17624047.4	1	Shaft Oil Filter		
23	17620024.4	1	Plug TAPER		
24	52102157	6	Bolt DIN 933 M6-20 8.8		
25	13322074	7	Bolt DIN 933 M6-16 8.8 [NP]		
26	13827012	2	Bolt		
29	13820129C	1	Gauge Oil LEVEL		
30	13920003	1	Bearing Set CRANK STD.		
31	13920004	1	Bearing Set CRANK +0,25		
32	13920005	1	Bearing Set CRANK		

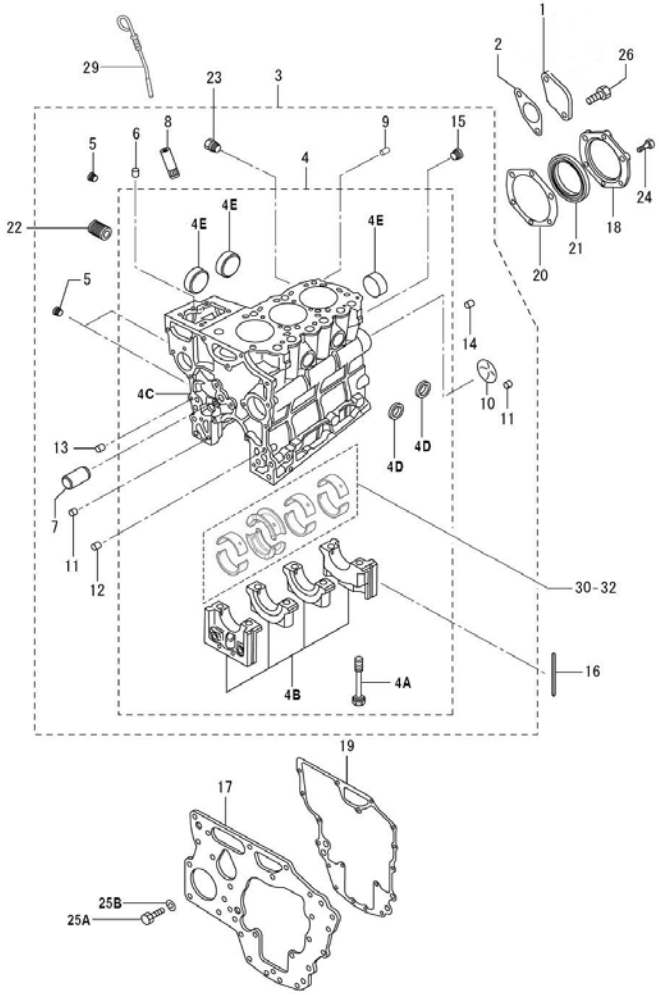

[NP] Not provided

D_MIB1_1_8			Piston & Connectiong Rod		
FIG.	REF.	QTY	DESCR.	FROM	UPTO
1	17622001	3	Piston &Pin Set		
2	17622002	3	Piston & Pin Set		
3	17622003	3	Piston & Pin Set		
4	17622006	3	Ring Set,Piston STD.		
5	17622007	3	Ring Set,Piston O.S. 0.25		
6	17622008	3	Ring Set,Piston O.S. 0.50		
7	17622012.4	3	ROD Assy		
7A	13222011	6	Nut,connecting rod		
7B	13222013	6	Bolt,connecting rod		
8	13822014	3	Bearing Set,CON-ROD STD.		
9	13822015	3	Bearing Set,Con-Rod U.S. 0.25		
10	13822016	3	Bearing Set,Con-Rod U.S. 0.50		

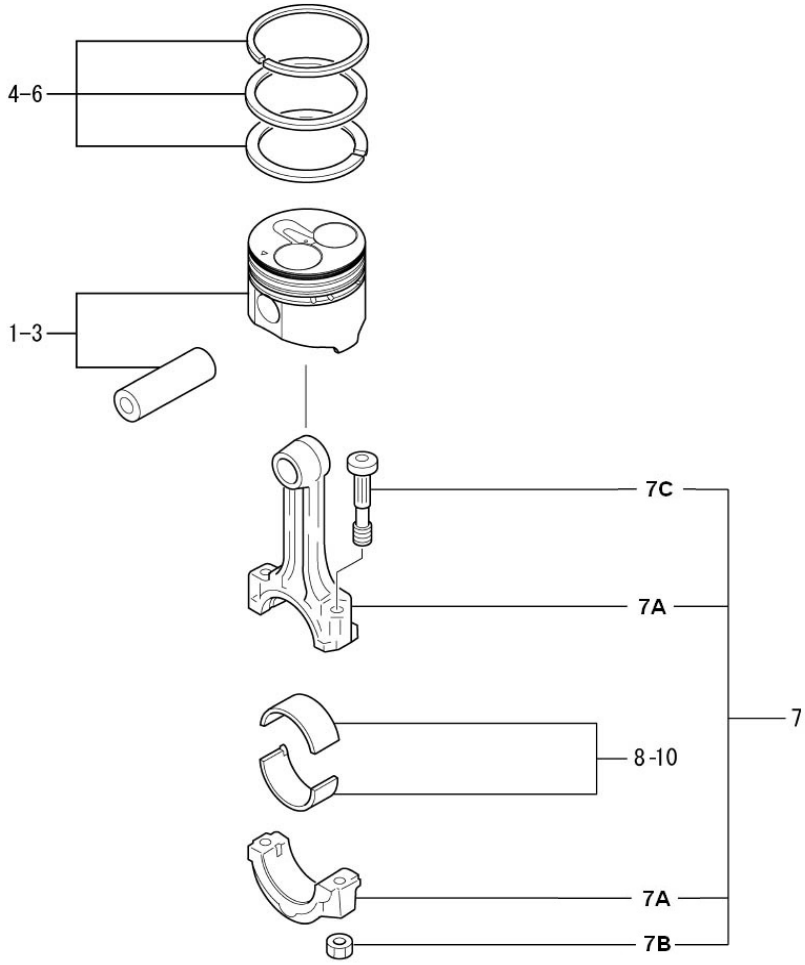

Engine Body

D_MIB1_1_9			Crankshaft & Flywheel		
FIG.	REF.	QTY	DESCR.	FROM	UPTO
1	13922019	1	CrankShaft (up to eng.nº 31854)		
2	17622024.4	1	Pulley CrankShaft		
3	17622021.4	1	Gear CrankShaft Z=26		
4	13822026	1	Nut		
5	51030016	1	Washer DIN 125-16		
6	53033016C	1	Washer		
7	17622036.4	2	KEY		
8	17622027.4	1	Flywheel Assy		
8A	(*)	1	Not available [NP]		
8B	17622029.4	1	Gear Ring Z=106 [NP]		
9	13822031.4	4	Bolt Flywheel		

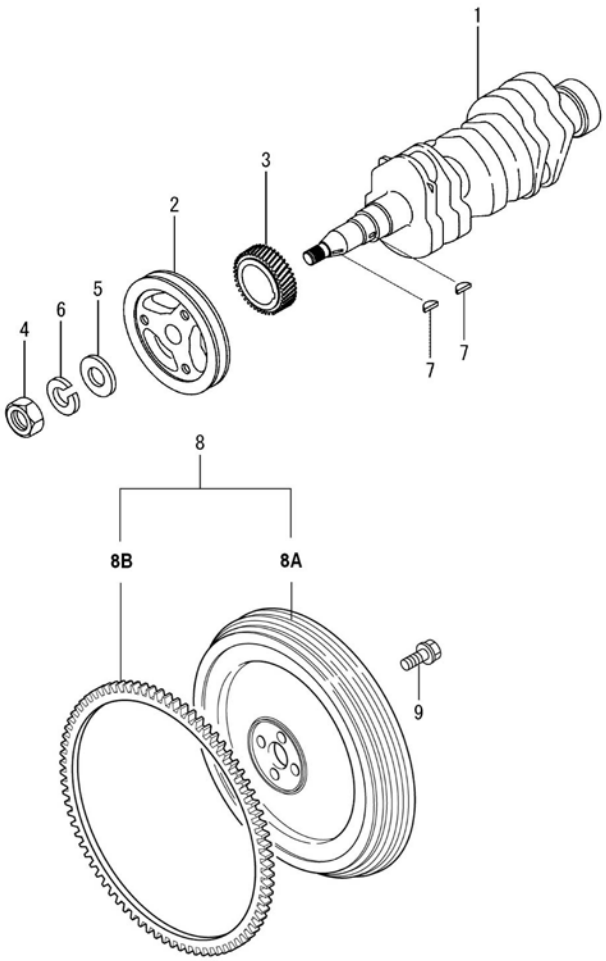

[NP] Not provided

D_MIB1_1_10			Oil System		
FIG.	REF.	QTY	DESCR.	FROM	UPTO
1	13124051	1	Filter Oil Element		
2	17624060.4	1	SWITCH Assy		
3	51221014	1	Nut DIN 936 M14X1,5 5.6 ZINC		
4	13824052	1	SCREEN Assy Oil		

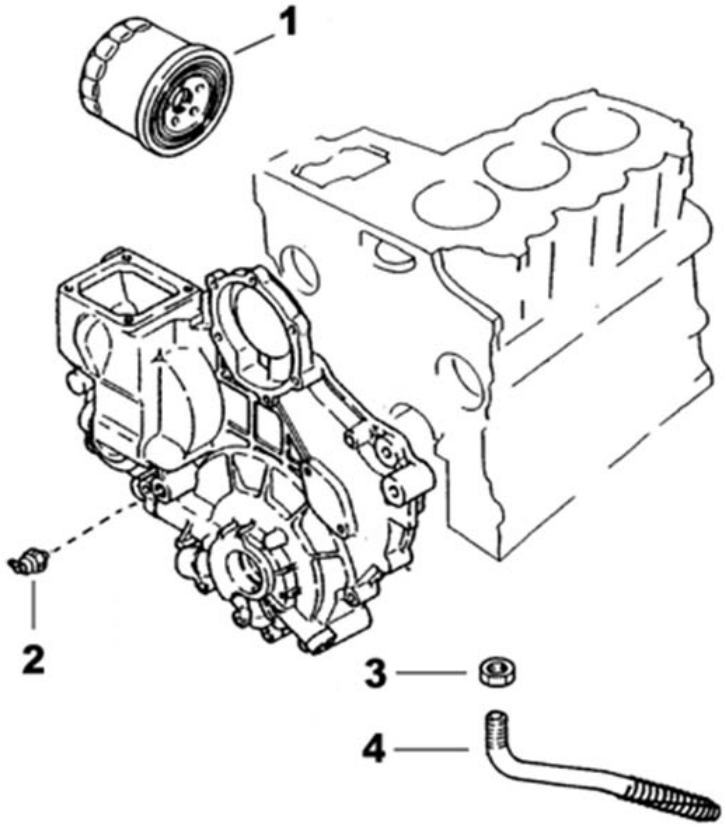

Engine Body

D_MIB3_1_11			Oil Pan		
FIG.	REF.	QTY	DESCR.	FROM	UPTO
1	17612030	1	Tube Oil Gauge		
2	13812029	1	Oil Dipstick		
3	16514022	1	Coupling,screw		
4	56000077	2	Washer 18-23-1,5		
5	13820030.4	1	PAN Assy Oil		
6A	52102155	14	Bolt DIN 933 M6-12 8.8		
6B	53033006	14	Washer GROWER DIN 127-6		
7	13820033.4	1	Gasket Oil PAN		
8	52102157	2	Bolt DIN 933 M6-20 8.8		
9	51030006	2	Washer DIN 125-6		

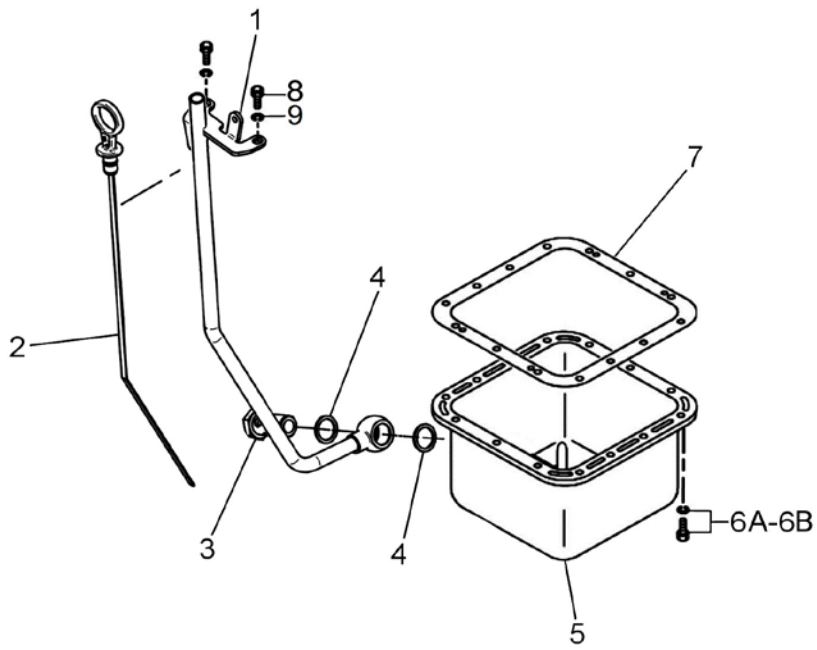

D_MIA3_1_12			Engine Brackets		
FIG.	REF.	QTY	DESCR.	FROM	UPTO
1	13810065	1	Left Front Bracket		
2	61638000	4	Anti Vibration Mount Type F		
3	52203313	4	Bolt DIN 912 M10-1,25-50 12.9		
4	53033010	4	Washer GROWER DIN 127-10		
6	13810066	1	Right Front Bracket		

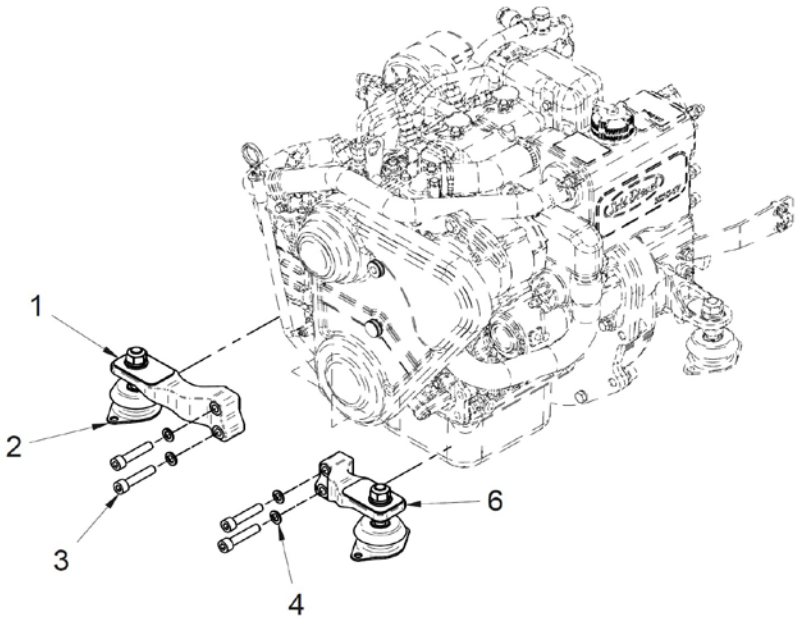

Engine Body

D_MIA3_1_15			Belt Protection		
FIG.	REF.	QTY	DESCR.	FROM	UPTO
1	13810064	1	Belt Protection		
2	13810075	1	Spacer		
3	52111161	1	ROD DIN 913 M6-40 8.8		
4	52111158	1	ROD DIN 913 M6-25 8.8		
5	13810076	1	Spacer		
6	52111167	1	Rod DIN 913 M6-70 8.8		
7	13810077	1	Spacer		
8	13810070	3	Knob		
9	17617006	3	Spacer 6,5X12X5		
10	13810078	1	Spacer 6.2x10x5		

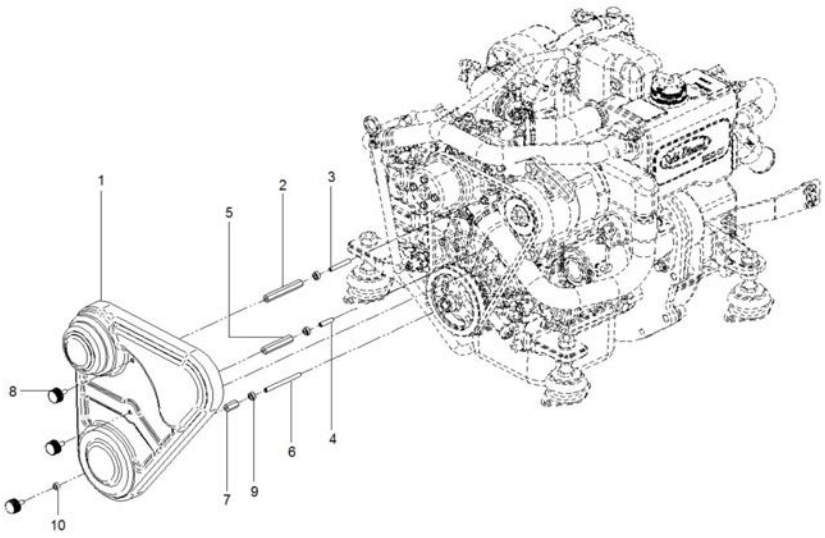

Inlet & Exhaust

D_MIB3_2_1			Inlet		
FIG.	REF.	QTY	DESCR.	FROM	UPTO
1	5491A007	3	Bolt PT 3x20 WN1412		
2	5491A004	2	Bolt PT 3x10 WN1413		
3	13810074	1	Filter Air Complete	15/02/2017	
3A	13810072	1	Air Filter, Part 1 [NP]		
3B	13810073	1	Air Filter Element		
3C	13810071	1	Air Filter, Part 2 [NP]		
4	54082032	1	Clamp DIN 3017 32-50/12 W4		
5	54102109	2	Bolt DIN 933 M5-25 INOX.		
6	13819001	1	Clamp		
7	17610027	1	Bend Filter Air		
8	52120006	1	Nut DIN 934 M6 8.8		
9	53033006	1	Washer GROWER DIN 127-6		
10	14419023	1	Ball JOINT		
11	15119015	1	CABLE Holder Ball		
12	17621042	1	Gasket		
13	53038006	2	Washer DIN 6798-A 6		
14	52102157	2	Bolt DIN 933 M6-20 8.8		
15	17621030	1	Cover Assy Intake		
16	13820042	2	Bolt DIN 933 M6-35 8.8 [NP]		
17	52101162	2	Bolt DIN 931 M6-45 8.8		
18	17621032	1	Gasket Intake COV		

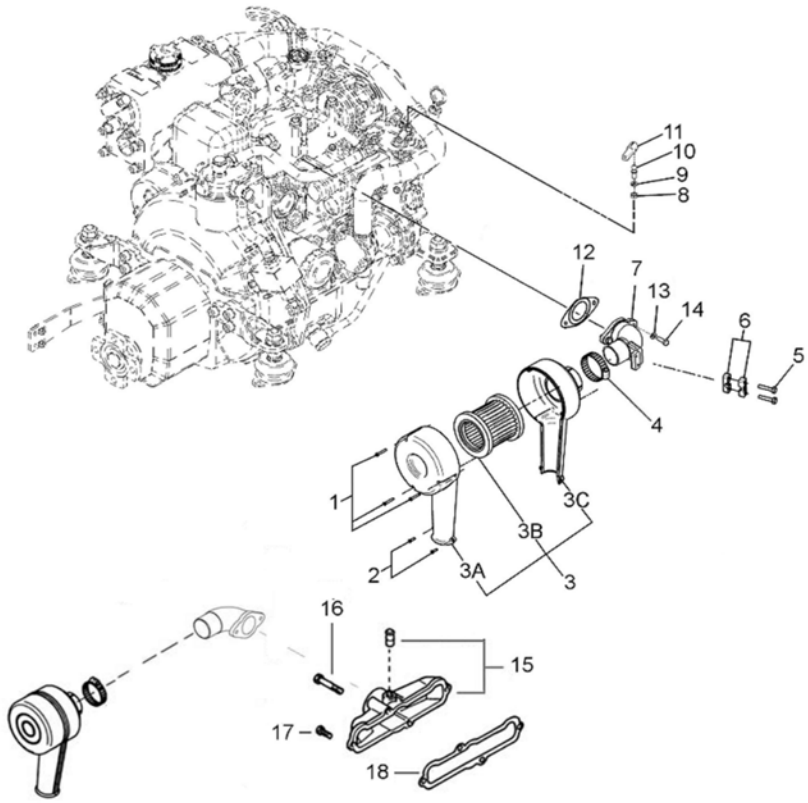

[NP] Not provided

Cooling System

D_MIB3_3_1			Water Pump		
FIG.	REF.	QTY	DESCR.	FROM	UPTO
2	13921021	1	Pulley Water Pump		
3	52102155	4	Bolt DIN 933 M6-12 8.8		
4	13821020	1	Fresh Water Pump		
5	17621022.4	1	Gasket Water Pump		
6	52102157	2	Bolt DIN 933 M6-20 8.8		
7	52102160	1	Bolt DIN 933 M6-35 8.8		
8	52101162	1	Bolt DIN 931 M6-45 8.8		
9	52102164	2	Bolt DIN 933 M6-55 8.8		
11	13821027	1	Thermostat 71º		
13	13821031	1	Gasket Water OutL		
14	17621037.4	1	FITTING Thermostat New [NP]		
15	17621033.4	1	Gasket Thermostat		
16	52102158	2	Bolt DIN 933 M6-25 8.8		
17	52101165	1	Bolt DIN 931 M6-60 8.8		
18	17621026.4	1	Pipe BYPASS		
19	13821038	2	O-Ring D. 9X2		
20	56000073	1	Copper Washer 16-23-1,5		
21	60900070	1	Thermo-Switch 97ºC		
22	60900980	1	Temperature Sensor		

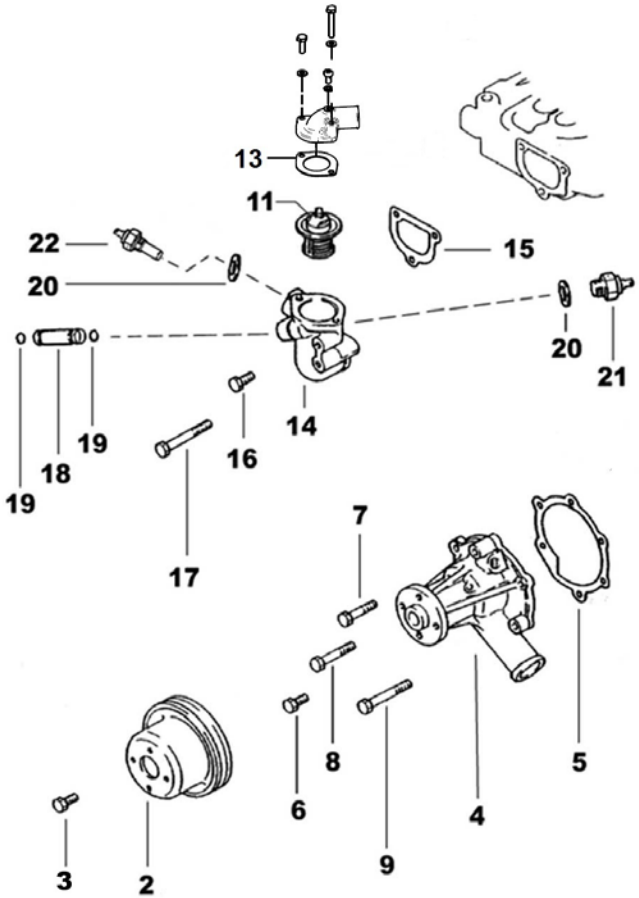

[NP] Not provided

Cooling System

D_MIB3_3_2			Cooler Pipes		
FIG.	REF.	QTY	DESCR.	FROM	UPTO
1	13811030	1	Sleeve Rubber		
2	54081023	2	Clamp DIN 3017 23-35/9 W4		
3	54081016	4	Clamp DIN 3017 16-27/9 W4		
5	52120008	4	Nut DIN 934 M8 8.8		
6	53033008	4	Washer GROWER DIN 127-8		
7	51030008	4	Washer DIN 125-8		
8	13811062	4	Pump Bracket		
9	17011007	1	O-Ring D. 57X3		
10	37611000	1	1/2" Pump Water, Set		
11	13811033	2	Raccord 1/2"		
12	52102155	1	Bolt DIN 933 M6-12 8.8		
13	53033006	1	Washer GROWER DIN 127-6		
14	51030006	2	Washer DIN 125-6		
15	13811028	1	Sleeve Rubber		
16	13821031	1	Gasket Water OutL		
17	59071304	2	Clamp RSGU 1 30/15 W1		
18	52102158	1	Bolt DIN 933 M6-25 8.8		
19	52102161	1	Bolt DIN 933 M6-40 8.8		
20	53038006	1	Washer DIN 6798-A 6		
21	13811035	1	Bolt,bleed		
22	56000053	1	Washer 6-10-1,5		
23	13811031	1	Cover		
24	54081025	2	Clamp DIN 3017 25-40/9 W4		
25	13811029	4	Sleeve Rubber		
26	17611005	1	Water Cooler Assy MINI-29 v6		
27	13811032	1	Elbow		
28	14711008	4	Stud,cover		
29	51125008	4	Nut Exhaust		
30	17211015	2	MANIFOld MOUNTING Stud		
31	55122008	2	Nut DIN 1587 M8		
32	56000057	2	Washer 8-13-1,5		
33	17621035	1	Gasket, Exhaust		

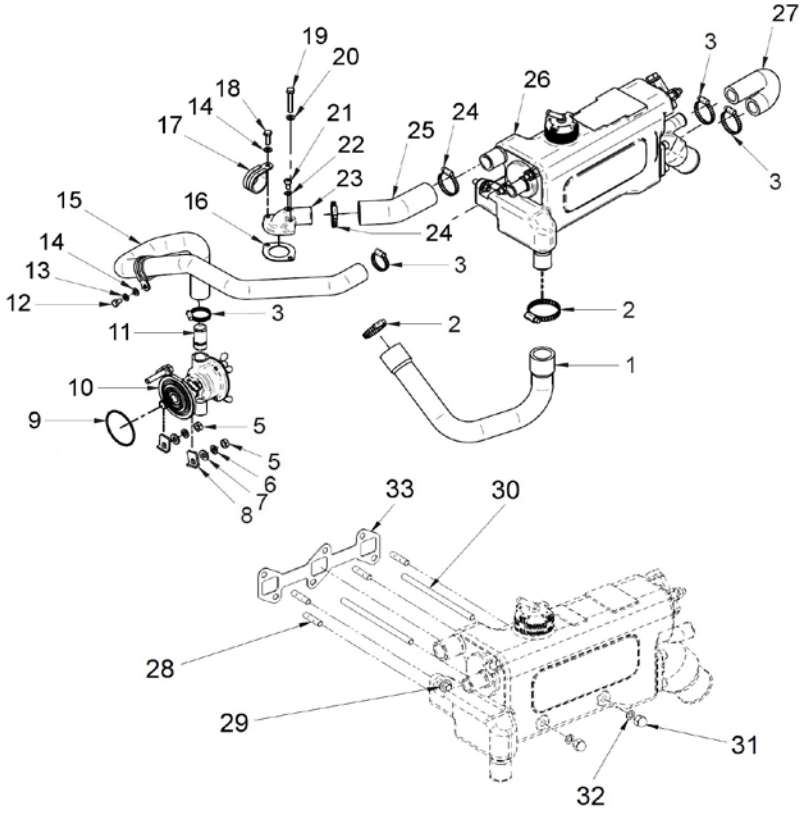

Cooling System

17611005			Water Cooler Assy MINI-29 v6		
FIG.	REF.	QTY	DESCR.	FROM	UPTO
1	17611006	1	Body, Water Cooler MINI-29 v6 [NP]		
2	13811010	1	Cap		
3	13811034	2	Raccord 3/4"		
4	17211004	1	Tubular Bundle		
5	13811007	2	O-Ring D. 57X2,5		
6	13811002	1	Water Cooler Cover		
7	13811033	1	Raccord 1/2"		
8	13311006	4	Stud,cover		
9	51030008	4	Washer DIN 125-8		
10	53033008	4	Washer GROWER DIN 127-8		
11	54120008	4	Nut DIN 934 M8		
12	54102306	1	Bolt DIN 933 M10-16 INOX.		
13	56000061	1	Washer 10-16-1,5		
14	13811042	1	Water Cooler Cover		
15	13811043	1	Engine Anode		
16	56000073	1	Copper Washer 16-23-1,5		
17	18011009	1	Anode Plug		

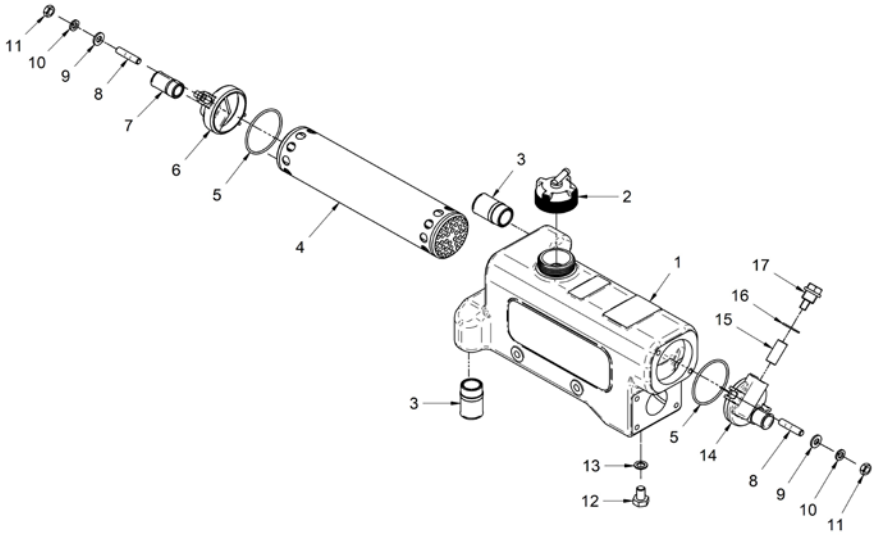

[NP] Not provided

Cooling System

	37611000		1/2" Pump Water, Set		
FIG.	**REF.**	**QTY**	**DESCR.**	**FROM**	**UPTO**
1	54102154	3	Bolt DIN 933 M6-10 INOX		
2	37611002	1	Cover Pump		
3	37611003	1	O-Ring D. 57x1,5		
4	31211008	1	1/2" Impeller		
5	37611026	1	Plate, Friction		
6	33811010	1	Shaft,Water Pump		
7	33411019	1	Seal		
8	33311013	1	O-Ring D. 15X2		
9	37611001	1	Body, Water Pump 1/2"		
10	33411020	1	Seal		
11	33411014	2	Ball Bearing 6002-C3		
12	33811015	1	Spacer		
13	53041032	1	CIRClip DIN 472 I-32		

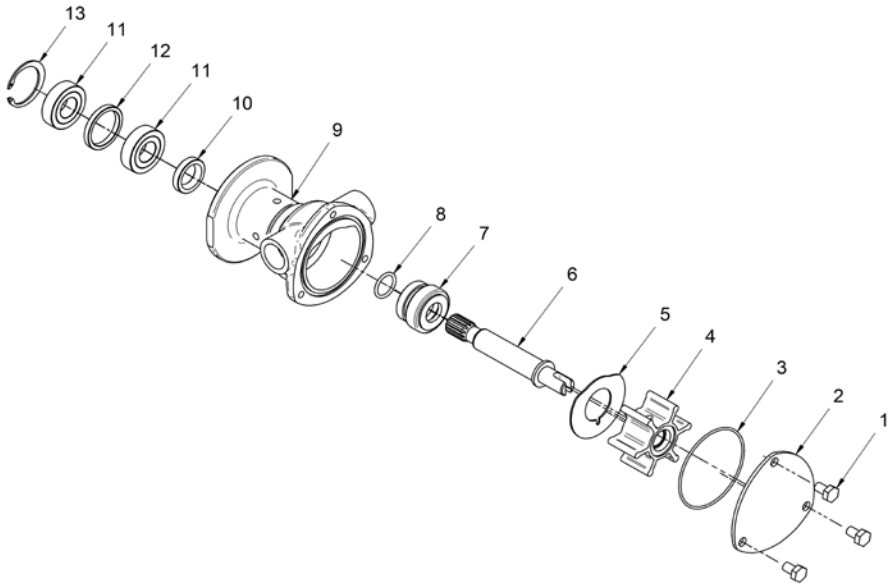

D_MIB1_3_5			Wet Exhaust		
FIG.	REF.	QTY	DESCR.	FROM	UPTO
1	17613015	1	Elbow,WET Exhaust		
2	17613014	1	Gasket		
3	52103257	4	Bolt DIN 912 M8-20 8.8		
4	53033008	4	Washer GROWER DIN 127-8		

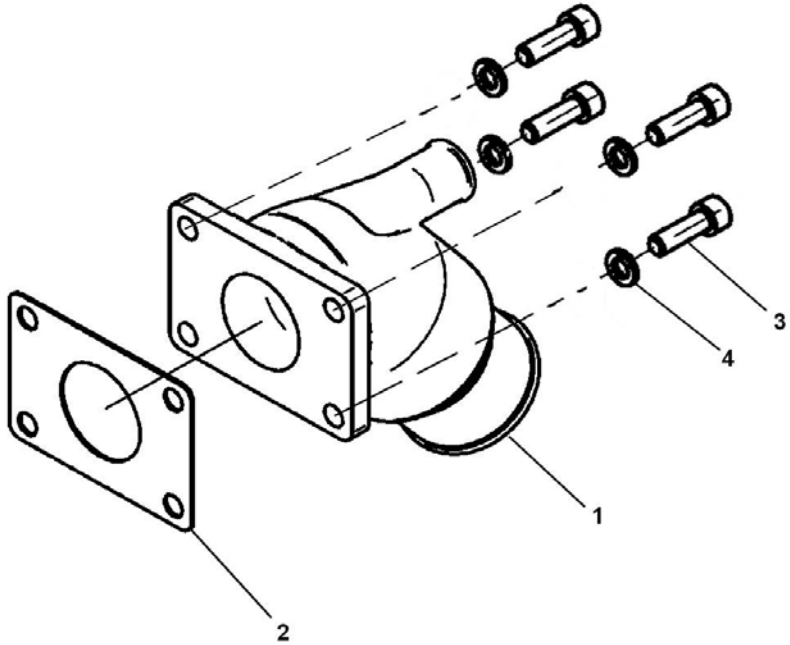

D_MIB1_4_1			Fuel Pipe		
FIG.	REF.	QTY	DESCR.	FROM	UPTO
1	17624015.4	1	Pipe Injection N.1		
2	17624016.4	1	Pipe Injection N.2		
3	17624019.4	1	Pipe Injection N.3		
4	17624024.4	3	Nut		
5	13924026	1	Tube Gas-Oil SPILL		
6	13824025	3	Injector Gasket		
7	13824013	3	Injector Washer		
8A	52102157	4	Bolt DIN 933 M6-20 8.8		
8B	53033006	4	Washer GROWER DIN 127-6		
9	17624005.4	0	Shim Adjusting T=0,2MM. [NP] [VAR]		
10	17624003.4	0	Shim Adjusting T=0,3MM. [NP] [VAR]		
11	17624004.4	0	Shim Adjusting T=0,3MM. [VAR]		
12	17624006.4	0	Shim Adjusting T=0,4MM. [VAR]		
13	17624007.4	0	Shim Adjusting T=0,6MM. [VAR]		
14	17624008.4	0	Shim Adjusting T=0,7MM. [NP] [VAR]		
15	17624009.4	0	Shim Adjusting T=0,8MM. [VAR]		
16	17624010.4	0	Shim Adjusting T=0,9MM. [VAR]		
17	17624011.4	0	Shim Adjusting T=1,0MM. [NP] [VAR]		

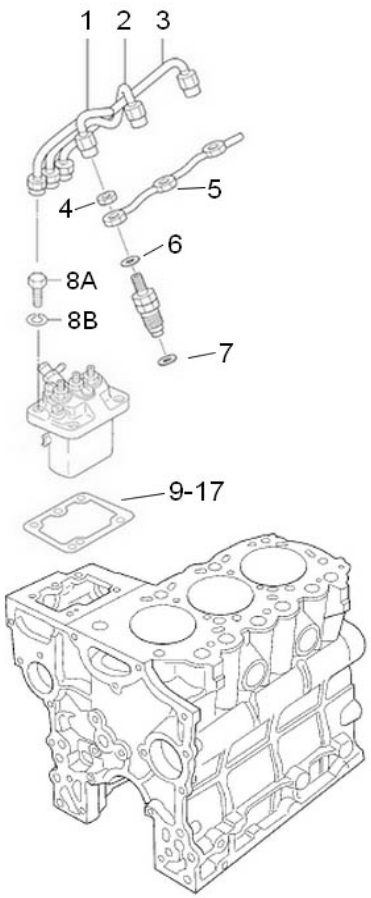

[NP] Not provided

[VAR] Variable according to repair

D_MIB1_4_2			Injection Nozzle		
FIG.	REF.	QTY	DESCR.	FROM	UPTO
1	17626001	3	Nozzle & Holder A		
1A	(*)	3	Not available [NP]		
1BA	13826010	0	Washer 1,25 [VAR]		
1BB	13826011	0	Washer 1,30 [VAR]		
1BC	13826012	0	Washer 1,35 [VAR]		
1BD	13826013	0	Washer 1,40 [VAR]		
1BE	13826014	0	Washer 1,45 [VAR]		
1BF	13826015	0	Washer 1,50 [VAR]		
1BG	13826016	0	Washer 1,55 [VAR]		
1BH	13826017	0	Washer 1,60 [VAR]		
1BI	13826019	0	Washer 1,65 [VAR]		
1BJ	13826020	0	Washer 1,70 [VAR]		
1C	17126004	3	Spring, pressure		
1D	13826003	3	Pin Pressure		
1E	13826007	3	PIECE DISTANCE		
1F	17626018	3	Nozzle Assy		
1G	17226006	3	Nut, Nozzle RETAINING		

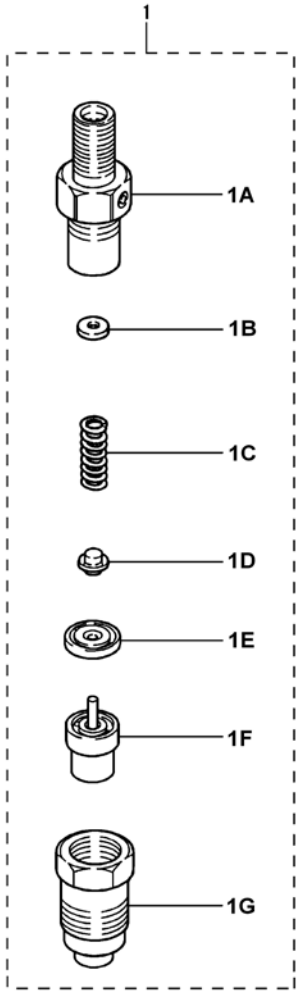

[NP] Not provided

[VAR] Variable according to repair

D_MIB2_4_3			Fuel Injection Pump		
FIG.	REF.	QTY	DESCR.	FROM	UPTO
1	13925005	1	Housing SUB Assy		
2	17625004.4	3	Holder		
3	17625033.4	3	O-Ring		
4	13925002G	3	Spring [NP]		
5	13925007G	3	Gasket DELIVERY V [NP]		
6	17625008.4	3	Valve SUB Assy		
7	13925009G	3	Element SUB Assy [NP]		
8	13825010	3	SLEEVE SUB Assy		
9	13925011G	3	Seat [NP]		
0	17625001.4	1	Pump Assy,Fuel Injection		
10	13925012G	3	Spring [NP]		
11	13925013G	3	Seat [NP]		
12A	13925015G	3	Plate Tappet Shim 1,85		
12B	13825016G	3	Plate Tappet Shim 1,90		
12C	13925017G	3	Plate Tappet Shim 1,95		
12D	13925018G	3	Plate Tappet Shim 2,00		
12E	13925019G	3	Plate Tappet Shim 2,05		
12F	13925020G	3	Plate Tappet Shim 2,10		
12G	13925021G	3	Plate Tappet Shim 2,15		
12H	13925022G	3	Plate Tappet Shim 2,20		
12I	13925023G	3	Plate Tappet Shim 2,25		
12J	13925024G	3	Plate Tappet Shim 2,30		
12K	13925025G	3	Plate Tappet Shim 2,35		
12L	13925026G	3	Plate Tappet Shim 2,40		
12M	13925027G	3	Plate Tappet Shim 2,45		
12N	13925028G	3	Plate Tappet Shim 2,50		
13	13925029G	3	TAPPET Assy [NP]		
14	13825026	1	Screw Air		
15	13925031G	1	Washer,DRAIN Screw [NP]		
16	13825027	1	Screw HOLLOW		
17	17325029.3	1	Nipple Swivel		
18	13825025.3	2	Washer [NP]		
19	13925030G	3	Plate Set [NP]		
20	13925032G	3	Screw,W/Washer [NP]		
21	17625006.4	1	RACK Assy Control		

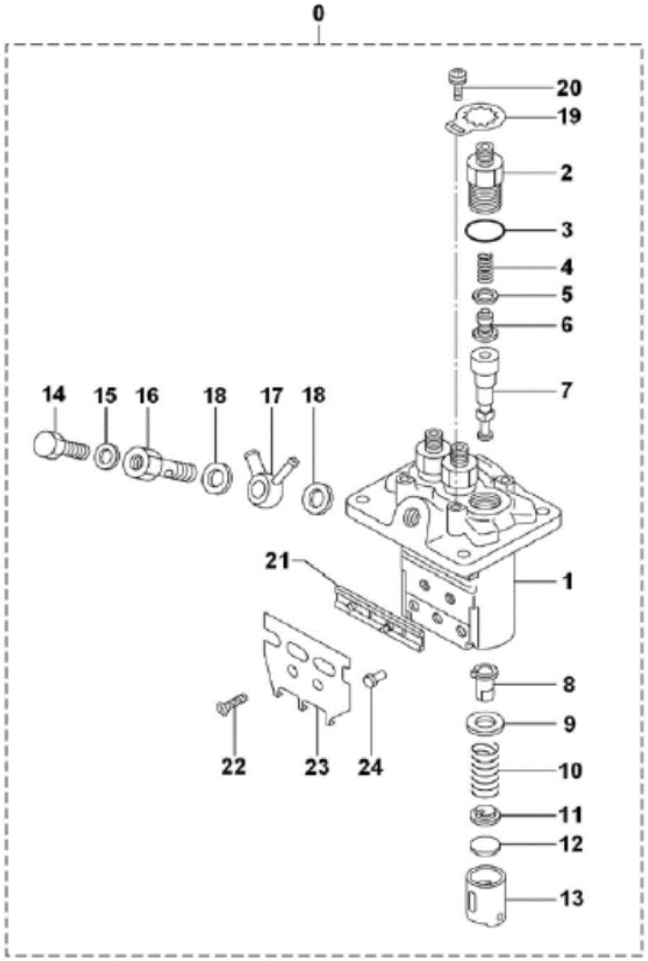

[NP] Not provided

D_MIB2_4_3			Fuel Injection Pump		
FIG.	REF.	QTY	DESCR.	FROM	UPTO
22	13825062	2	Screw		
23	13925063	1	Bracket Stop Wire		
24	13925034G	3	Pin Tappet Guide [NP]		

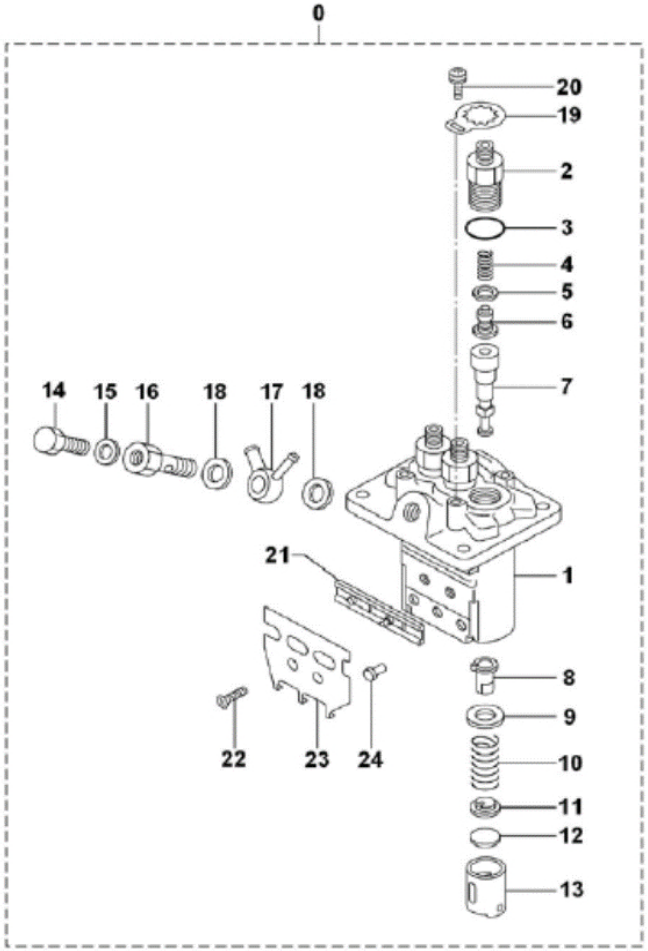

D_MIB1_4_4			Governor Parts		
FIG.	REF.	QTY	DESCR.	FROM	UPTO
1	17623020.4	1	Metal,Fuel		
2	17623019.4	1	Wire		
3	13123017	1	Bolt High Speed		
4	17223017.4	1	Bolt		
5	17623005.4	1	Stopper [NP]		
6	13823001	1	WEIGHT Assy,GOverNOR		
7	60530009	1	Shaft Assy,sliding		
8	17623014.4	1	Gasket Tie Rod CO		
9	13923005	1	ROD TIE		
10	13923006	1	Spring,TIE ROD		
11	17623032.4	1	Cover,Governor		
12	17623033.4	1	Gasket Governor Cover [NP]		
13	13823042	1	Cap TORQUE Set SE		
14	17623043.4	1	Cover TIE ROD		
15	13823015	1	Spring GOverNOR		
16	(*)	1	Not available [NP]		
16A	17223035	1	Nut		
16B	13823034	1	RACK Set Screw (new)		
17	17623003.4	1	Lever Assy Governor		
18	13823007	1	Lever Assy TENSIO		
19	17623006.4	1	Shaft Governor		
20	13823044	1	Spring TIE ROD		
21	17623008.4	1	Lever Assy SPEED		
22	13823027	1	Lever Governor SP		
23	13823036	1	Spring START		
24	17623009.4	2	Pin GROOVED		
25	52102155	4	Bolt DIN 933 M6-12 8.8		
26	13223016	2	Bolt		
27	52102156	4	Bolt DIN 933 M6-16 8.8		
28	13823011	1	Bolt,W/Washer		
29	17223032	2	Nut		
30	17223030	1	Nut		
31	53033008	1	Washer GROWER DIN 127-8		
32	13123021	1	O-Ring D. 7X1.8		
33	17623045.4	1	Cover,Governor Shaft		

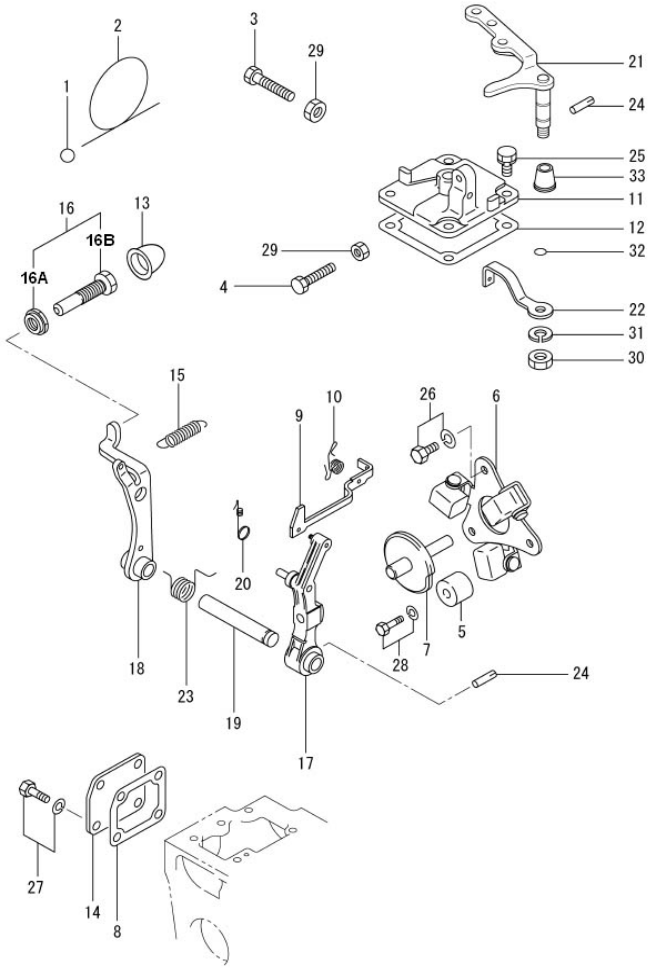

[NP] Not provided

D_MIB3_4_5			Fuel Supply Parts		
FIG.	REF.	QTY	DESCR.	FROM	UPTO
1	12814051	2	Screw,eye		
2	57000369	4	Washer 14,2-20-1,5		
3	17214012	2	COLLAR,Union		
4	13114020	1	Cover,filter		
5	13114022	1	Gas-Oil Filter Element		
6	13814017.5	1	Fuel Pump Hose		
7	51086016	3	ONE EAR Clamp With INTERIOR Ring		
8	51031008	2	Washer DIN 9021 8		
9	52102257	2	Bolt DIN 933 M8-20 8.8		
10	17614029	1	Pipe		
11	51086011	4	ONE EAR Clamp With Interior Ring		
12	17614026	1	0,04 M. Hose		
13	17614030	1	Pipe		
14	13814027	1	Assy,Fuel Return		
15	56000205	1	Washer 10-16-3		

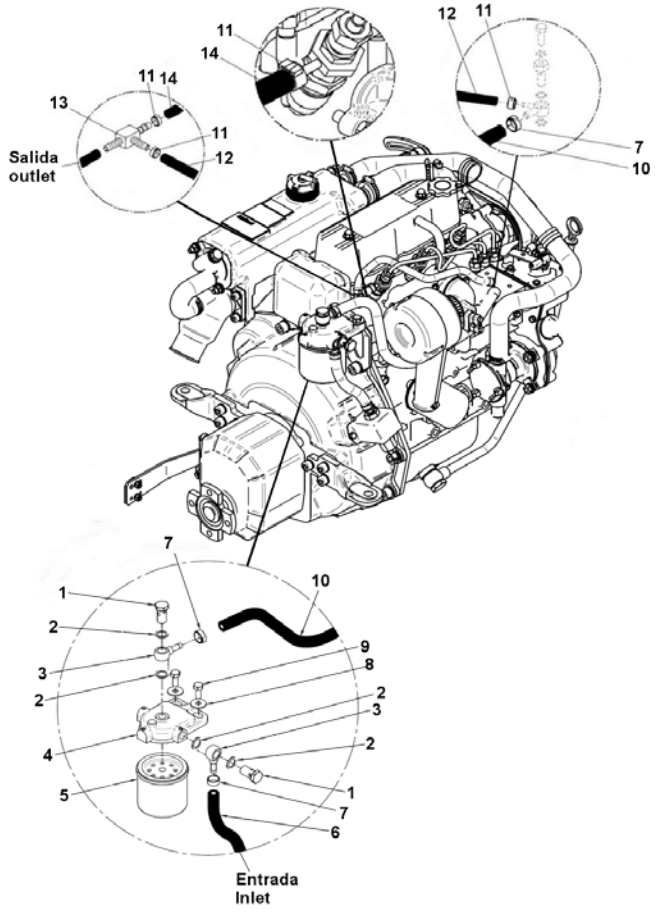

D_MIA3_5_1			Kit Alternator 14V/75A		
FIG.	REF.	QTY	DESCR.	FROM	UPTO
1	13817012	1	Alt. 14V/75A		
2	13817019	1	Pulley Alternator		
3	13817018	1	Spacer		
4	13817015	1	Plate		
5	51030006	2	Washer DIN 125-6		
6	53033006	2	Washer GROWER DIN 127-6		
7	52102158	1	Bolt DIN 933 M6-25 8.8		
8	52101166	1	Bolt DIN 931 M6-65 8.8		
9	52102257	1	Bolt DIN 933 M8-20 8.8		
10	51031008	1	Washer DIN 9021 8		
11	52101275	1	Bolt DIN 931 M8-120 8.8		
12	53038008	1	Washer DIN 6798-A 8		
13	17117002	1	Spacer 8,5X20X5		
14	13817118	1	Spacer 8,5x20x28		
15	51030008	1	Washer DIN 125-8		
16	53033008	1	Washer GROWER DIN 127-8		
17	52120008	1	Nut DIN 934 M8 8.8		
18	17617027	1	V-Belt		

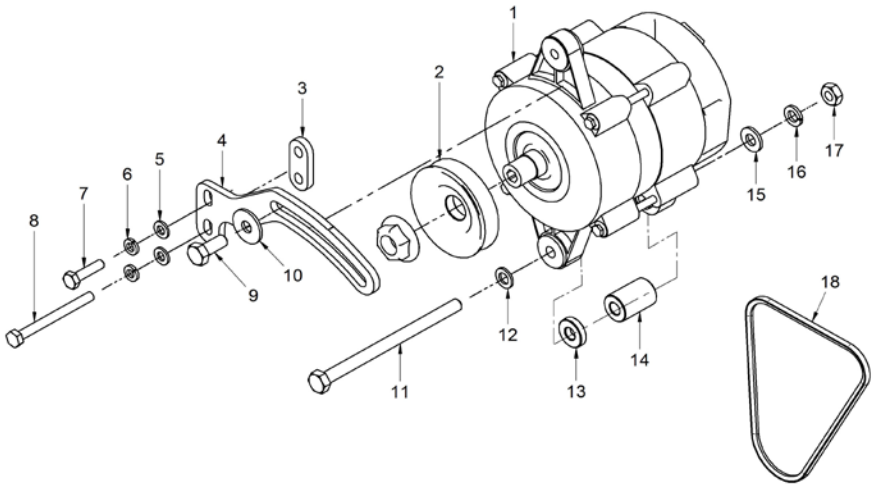

	D_MIB1_5_5		Starter Assy		
FIG.	REF.	QTY	DESCR.	FROM	UPTO
1	13827002	1	Starter Assy 12 V		
2	52102259	2	Bolt DIN 933 M8-30 8.8		
3	53033008	2	Washer GROWER DIN 127-8		

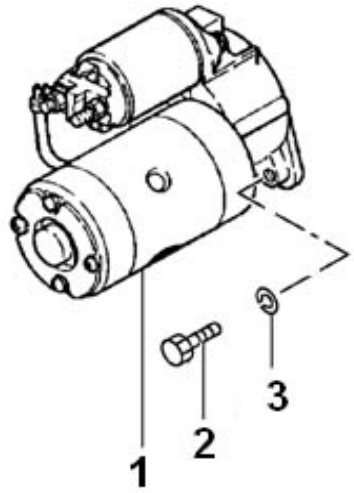

Electrical System

D_MIB3_5_5			Electrical Wiring		
FIG.	REF.	QTY	DESCR.	FROM	UPTO
1	13817003	1	Cover		
2	13827005	1	Glow Relay		
3	51030006	2	Washer DIN 125-6		
4	52102154	3	Bolt DIN 933 M6-10 8.8		
5	51030005	1	Washer DIN 125-5		
6	52102104	1	Bolt DIN 933 M5-10 8.8		
7	13817007	1	Rubber Cover		
8	53203358	2	Bolt DIN 912 M12-1,25-25 12.9	01/08/2017	
8	53203359	2	Bolt DIN 912 M12-1,25-30 12.9		31/07/2017
9	53033012	2	Washer GROWER DIN 127-12		
10	13817006	1	Cover		
11	13817005	1	Relay 6V		
12	13817002	1	Support,relay		
13A	60938210.1	1	Engine Wiring Ext. 3 M. SUPERSEAL		
13B	60985210.1	1	Engine Wiring Ext. 4 M. SUPERSEAL		
13C	60985210.12.1	1	Engine Wiring Ext. 12 M. SUPERSEAL		
13D	60985210.24.1	1	Engine Wiring Ext. 24 M. SUPERSEAL		
14	17627017.4	3	Plug,glow		
15	13827018.4	1	Plate Glow Plug		
16	60934040	1	Wirine		
17	13824020	1	SOLENOID		
18	13425029	1	Nut (old)		
19	60938204	1	Wiring,electrical MINI 17-26		
20	51031006	1	Washer DIN 9021 6		

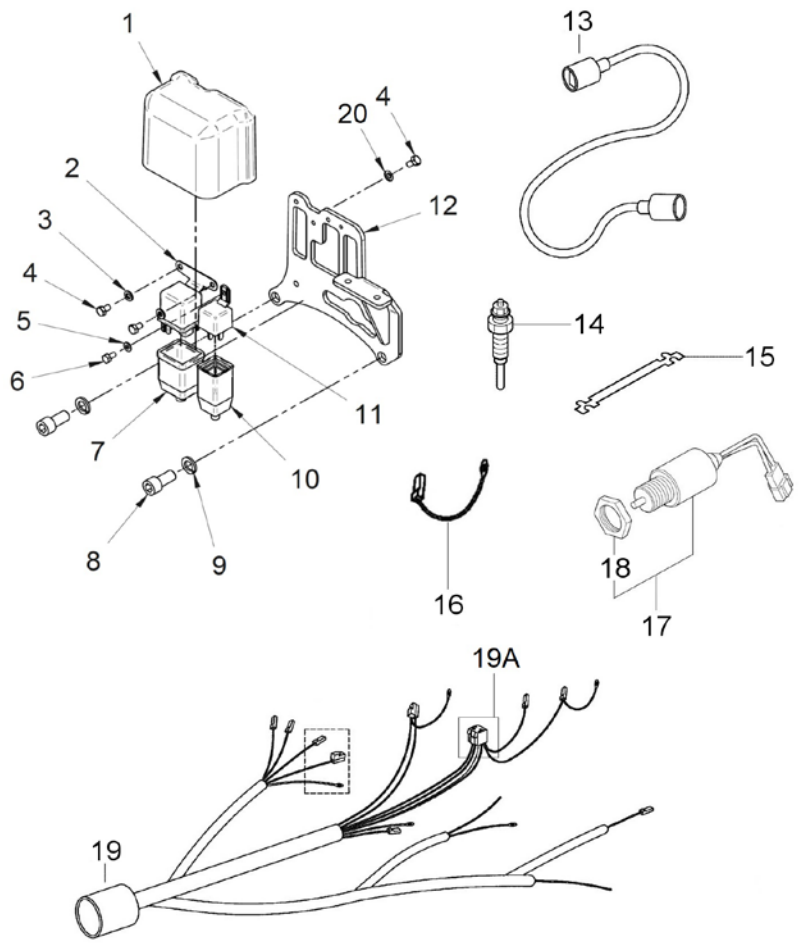

D_60938130			SVT 20 MINI-17/29 Panel		
FIG.	REF.	QTY	DESCR.	FROM	UPTO
1	60938005.1	1	Panel N.2		
2	60900301.2	1	V3 C.I. 12V Prop. Engine Board.Varnished [NP]		
3	54108003	2	Bolt DIN 84 M3-8 INOX.		
4	60900910.1	1	MTG Bracket 3" LG GA AMEGA		
5	60900910.2	3	Nut 8-32 W/CapTIVE STAR Washer		
6	60900037.2	1	Connector		
7	60900915.2	1	MTG Bracket		
8	60900037	1	Key-Locking		
9	60900931	2	SOCKET,WEDGE BASE		
10	60900929	2	Bulb 12V		
11	60900937	1	Water Gauge 12 V		
12	60938911	1	Tachometer MINI-17/26 SVT		
13	60900096	1	Cover Plate for Motor Propeller		
14	60938006.1	1	Gasket Panel		
NS	60900091	1	MICRO Relay 12V 12-20 [NS]		
NS	60910012	1	System Back Panel SVT/MVT 20 12V [NS]	07/12/2016	

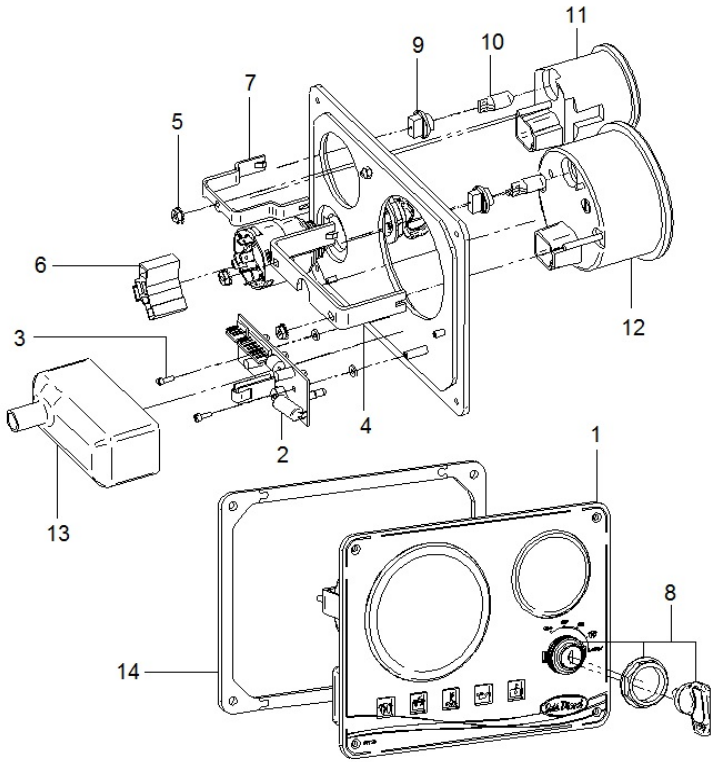

[NP] Not provided
[NS] Not shown

D_60938132			SVT 30 MINI-17/29 Panel		
FIG.	REF.	QTY	DESCR.	FROM	UPTO
1	54108003	2	Bolt DIN 84 M3-8 INOX.		
2	60900037	1	Key-Locking		
3	60900037.2	1	Connector		
4	60900910.2	5	Nut 8-32 W/CapTIVE STAR Washer		
5	60900931	4	SOCKET,WEDGE BASE		
6	60900929	4	Bulb 12V		
7	60990005.1	1	Panel N.3		
8	60990006.1	1	Gasket Panel		
9	60900096	1	Cover Plate for Motor Propeller		
10	60900301.2	1	V3 C.I. 12V Prop. Engine Board.Varnished [NP]		
11	60900910.1	1	MTG Bracket 3" LG GA AMEGA		
12	60900915.2	3	MTG Bracket		
13	60900941	1	VOLTMETER 12V		
14	60938911	1	Tachometer MINI-17/26 SVT		
15	60900937	1	Water Gauge 12 V		
16	60900939	1	Oil Pressure Gauge 12V		
NS	60900091	1	MICRO Relay 12V 12-20 [NS]		
NS	60910014	1	System Back Panel SVT/MVT 30 12V [NS]	07/12/2016	

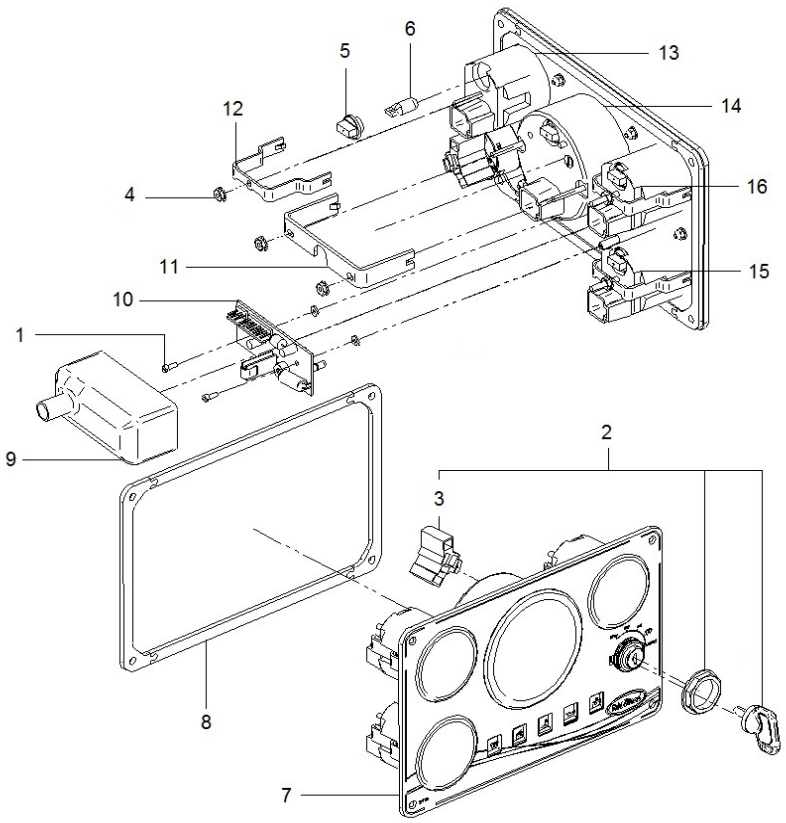

[NP] Not provided
[NS] Not shown

Maintenance Kit

D_17620101.6			Kit Gasket		
FIG.	REF.	QTY	DESCR.	FROM	UPTO
1	17727026	1	Washer [NP]		
2	17220047	1	Gasket Water Pump [NP]		
3	17624047	1	Gasket [NP]		
4	17621004	1	Gasket,Cylinder Head		
5	17621010	1	Rocker Cover Gasket		
6	17620012	1	Gasket Cover [NP]		
7	13820016	1	Gasket Oil Seal C		
8	13820018	1	Gasket Front Plate		
9	13820038	1	Gasket Housing		
0	17620101.4	1	Kit Gasket		
10	13820040	1	Gasket Gear Case		
11	13820033	1	Gasket Oil PAN [NP]		
12	17621042	1	Gasket		
13	17621032	1	Gasket Intake COV		
14	17621043	1	Gasket		
15	13821022	1	Gasket Water Pump		
16	13821031	1	Gasket Water OutL		
18	13823033	1	Gasket Governor Cover		
19	13823014	1	Gasket Tie Rod CO		
20	13120032	2	Washer 18-23-1,5 [NP]		
21	17424025G.1	3	Gasket Fuel Return (Genset)		
22	13824013	3	Injector Washer		
23	13222054	6	Seal Valve Stem		
24	13820044	2	O-Ring D. 11X2,5		
25	17624045	1	O-Ring		
26	17624048	1	O-Ring		
27	17621033.4	1	Gasket Thermostat		
28	13820002	4	Seal Side		
29	13811007	2	O-Ring D. 57X2,5		
30	17613014	1	Gasket		
31	37611003	1	O-Ring D. 57x1,5		
32	17011007	1	O-Ring D. 57X3		

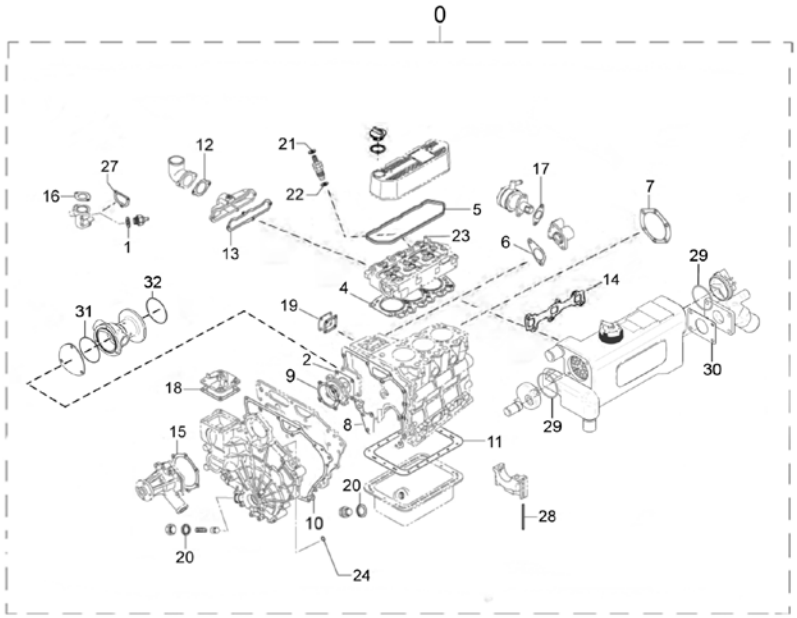

[NP] Not provided

Maintenance Kit

13811100.6			Pipe Rubber Set,water line 6 V.		
FIG.	**REF.**	**QTY**	**DESCR.**	**FROM**	**UPTO**
1	13811028	1	Sleeve Rubber		
2	13811029	1	Sleeve Rubber		
3	13811030	1	Sleeve Rubber		
4	13811032	1	Elbow		

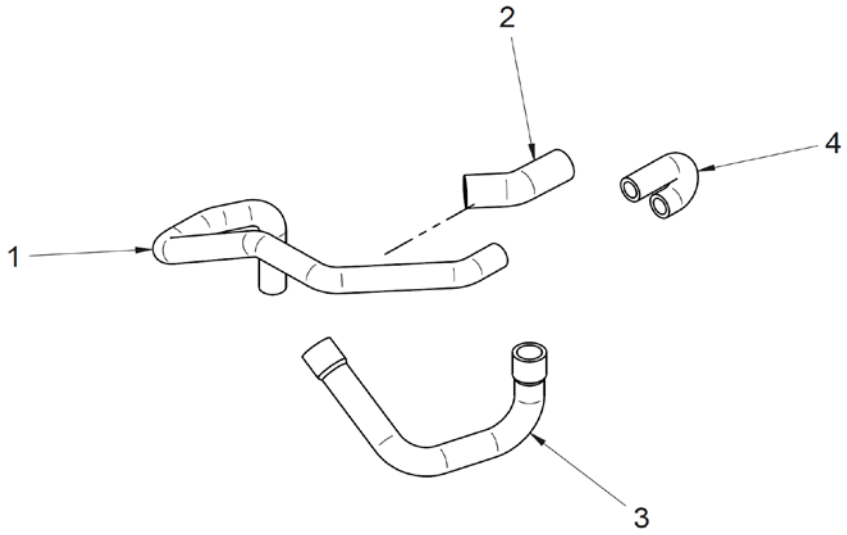

Maintenance Kit

37611000K			Repair Kit Water Pump 1/2"		
FIG.	REF.	QTY	DESCR.	FROM	UPTO
1	31211008	1	1/2" Impeller		
2	37611003	1	O-Ring D. 57x1,5		
3	33411020	1	Seal		
4	33411019	1	Seal		
5	33311013	1	O-Ring D. 15X2		
NS	17011007	1	O-Ring D. 57X3 [NS]		

[NS] Not shown

TM-345A Gearbox

D_5024_1			Sheet 1/4		
FIG.	REF.	QTY	DESCR.	FROM	UPTO
1	24850091	1	Screw		
2	24850092	3	Washer		
3	24850090	2	Washer		
4	24820068	3	Plug M8X1		
5	24820086	3	Washer 8-13-1,5 [NP]		
6	24810065	1	Plug		
7	24850008	1	Gauge Oil LEVEL		
26	24850028	11	Screw		
41	24810044	5	Bolt DIN 933 M6-16 8.8 [NP]		
56	24850005	1	Plate, IDENTIFICATION		
59	24810063	1	Plane Washer		
60	24850011	1	Plug,oil drain		
61	24850040	2	Bolt DIN 933 M6-25 8.8 [NP]		
62	24810047	1	Bolt DIN 933 M8-25 8.8 [NP]		
77	24810532	1	SWITCHER		
78	24810533	1	O-Ring D. 14X1,7		
79	24850527	1	Pin		

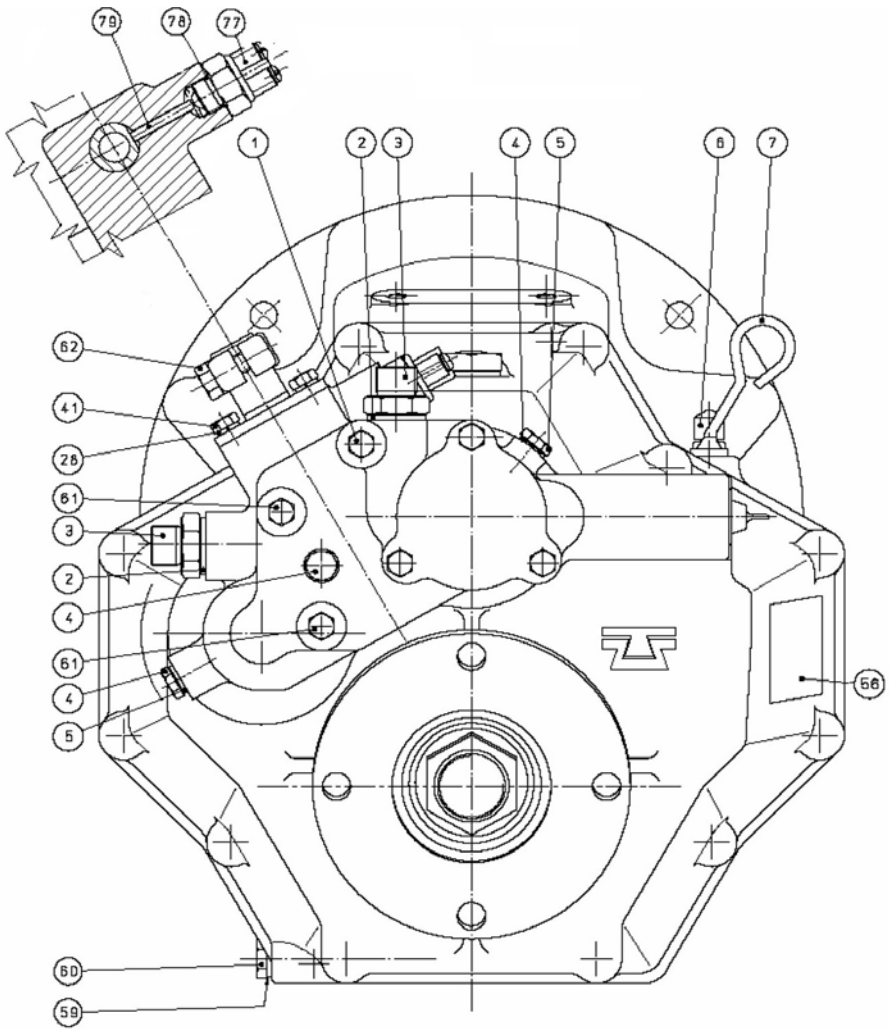

[NP] Not provided

TM-345A Gearbox

D_5024_2			Sheet 2/4		
FIG.	**REF.**	**QTY**	**DESCR.**	**FROM**	**UPTO**
33	24830113	1	Screw		

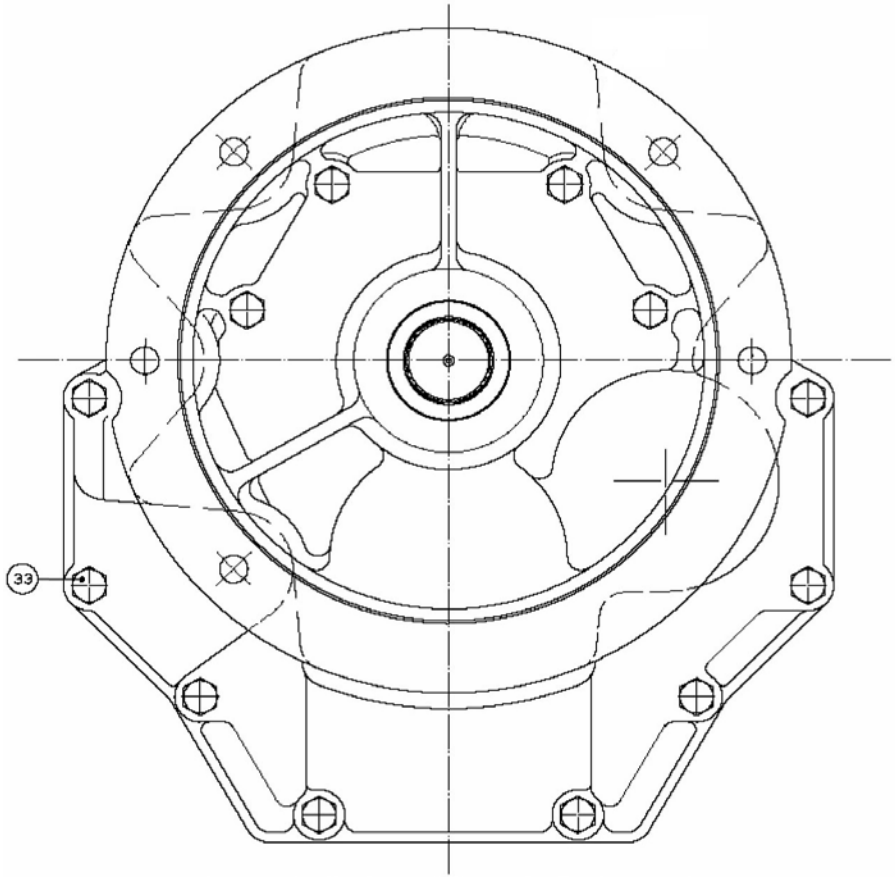

TM-345A Gearbox

	D_5024_3		Sheet 3/4		
FIG.	**REF.**	**QTY**	**DESCR.**	**FROM**	**UPTO**
8	24850323	2	Washer		
11	24850310	2	Ring		
12	24850307	2	Ring		
13	24850333	2	Spacer		
14	24850312	2	SEGER		
15A	24852203A	1	Gear R. 1,54 TM 345A		
15B	24853203A	1	Gear Red. 2 TM 345A		
15C	24854203A	1	Gear R. 2,47 TM 345A		
16	24850012	1	Plug		
17	24850318	4	Ring		
18	24850306	4	Bearing, needle		
19	24850325	2	Washer		
20	24850308	2	Conical Roller Bearing 32305		
21	24850328	4	Washer		
22	24810326	2	Plug		
23	24850016	1	Bushing		
24	24850020	1	PUMB Box		
25	24850015	1	Pump Cover		
27	24850029	3	Screw		
28	24810042	9	Washer GROWER DIN 127-6 [NP]		
29	24850095	1	Gear, Pump Out		
30	24850094	1	Pump Shaft		
31	24850096	1	Gear, Pump INNER		
32	24850097	1	O-Ring D. 50X1,7		
34	24850099	1	Nut		
35	24850224A	1	Flange, Output TM-345A		
36	24840103	1	Grommet		
37	24850212	1	Conical Roller Bearing 30207A		
38	24850001A	1	Front Body TM-345A		
39A	24852210A	1	Gear R. 1,54 TM 345A		
39B	24853210A	1	Gear R. 2 TM 345A		
39C	24854210A	1	Gear R. 2,47 TM 345A		
40	24850013	2	Pin		
42	24850080	1	Plate Pipe		
43	24850093	12	Washer		

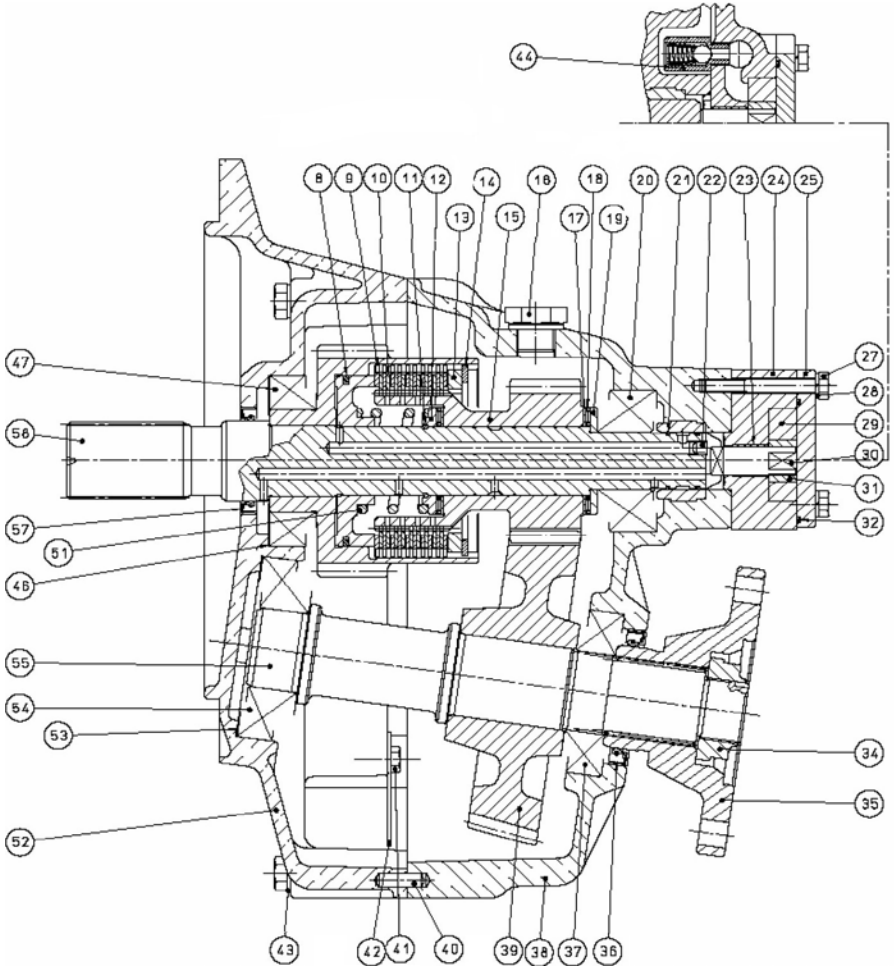

[NP] Not provided

TM-345A Gearbox

	D_5024_3		Sheet 3/4		
FIG.	**REF.**	**QTY**	**DESCR.**	**FROM**	**UPTO**
44	24850063	1	By pass Valve		
46	24850108	6	Shim Adjusting		
47	24850104	2	Conical Roller Bearing 32009-X		
51	24850122	2	Spring		
52	24850207A	1	Cover TM-345A		
53	24810333	3	Spacer		
54	24850206	1	Conical Roller Bearing 31307A		
55	24850201	1	Output Shaft		
57	24810103S	1	Grommet, Oil SILICON		
58	24850101	1	Input Shaft		

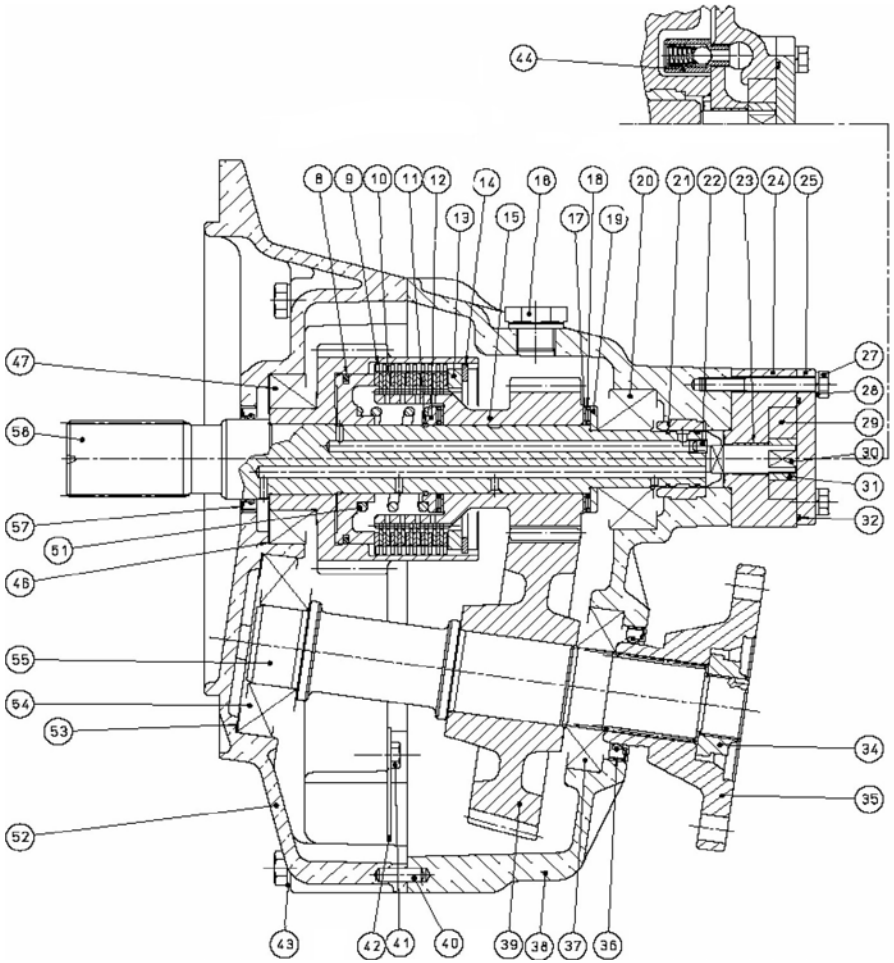

TM-345A Gearbox

D_5024_4			Sheet 4/4		
FIG.	REF.	QTY	DESCR.	FROM	UPTO
45A	24852302	1	Gear R. 1,54 TM 345A		
45B	24853302	1	Gear R. 2 TM 345A		
45C	24854302	1	Gear R. 2,47 TM 345A		
48	24850124	2	Piston		
49	24850301	1	INTERMEDIATE Shaft		
50	24850330	1	Bell		
63	24810056	2	O-Ring D. 15,08X2,62 [NP]		
64	24850081	1	Aspiration Tube		
65	24810035	1	Oil Filter		
66	24850085	1	Pin		
67	24850059	1	O-Ring D. 50X5,3		
68	24850076	1	Spacer		
69	24850057	1	Nut		
70	24850030	1	Spring		
71	24810424	1	Lever		
72	24810041	1	Support		
73	24850062	1	Selector Valve		
74	24850052	1	Valve		
75	24850078	1	Spring		
76	24850079	1	Screw		

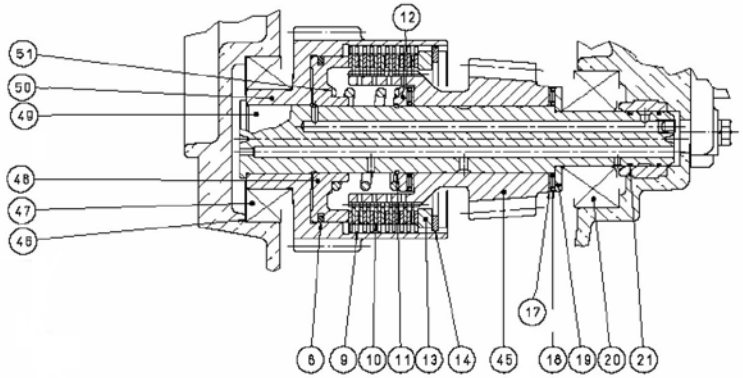

INTERMEDIATE SHAFT ASSEMBLY

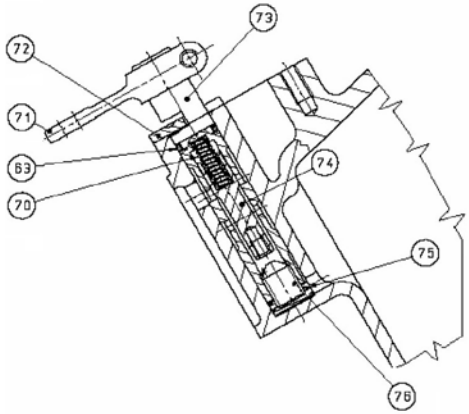

SELECTOR VALVE ASSEMBLY

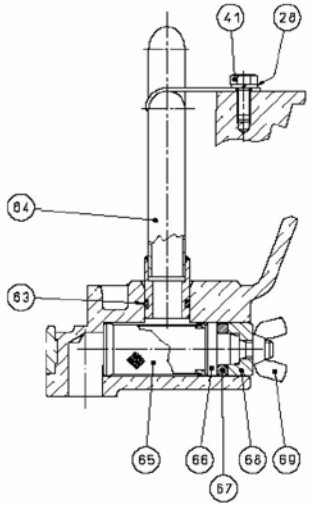

OIL FILTER ASSEMBLY

[NP] Not provided

TM-345A Gearbox

	D_5023_5		Maintenance Kit		
FIG.	**REF.**	**QTY**	**DESCR.**	**FROM**	**UPTO**
1	24850401	1	Kit Gasket		
2	A0105000	1	15W40 Sole Diesel Oil 5L		
3	24850403	2	Clutch Plate Kit		

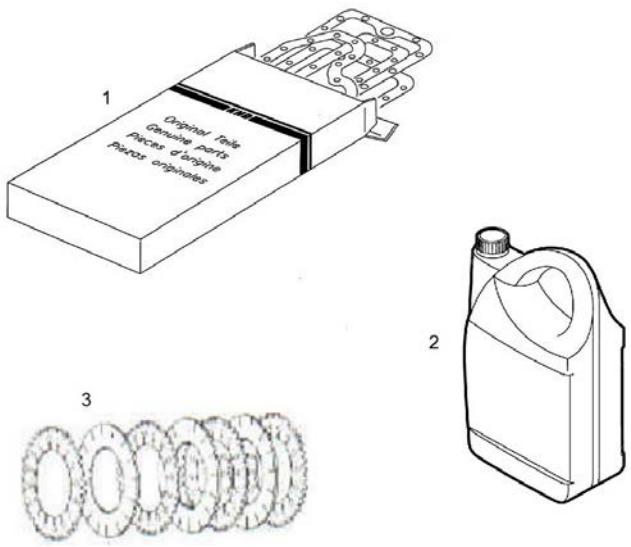

TM-345 Gearbox

D_5023_1			Sheet 1/4		
FIG.	REF.	QTY	DESCR.	FROM	UPTO
1	24850091	1	Screw		
2	24850092	3	Washer		
3	24850090	2	Washer		
4	24820068	3	Plug M8X1		
5	24820086	3	Washer 8-13-1,5 [NP]		
6	24810065	1	Plug		
7	24850008	1	Gauge Oil LEVEL		
26	24850028	11	Screw		
41	24810044	5	Bolt DIN 933 M6-16 8.8 [NP]		
56	24850005	1	Plate, IDENTIFICATION		
59	24810063	1	Plane Washer		
60	24850011	1	Plug,oil drain		
61	24850040	2	Bolt DIN 933 M6-25 8.8 [NP]		
62	24810047	1	Bolt DIN 933 M8-25 8.8 [NP]		
77	24810532	1	SWITCHER		
78	24810533	1	O-Ring D. 14X1,7		
79	24850527	1	Pin		

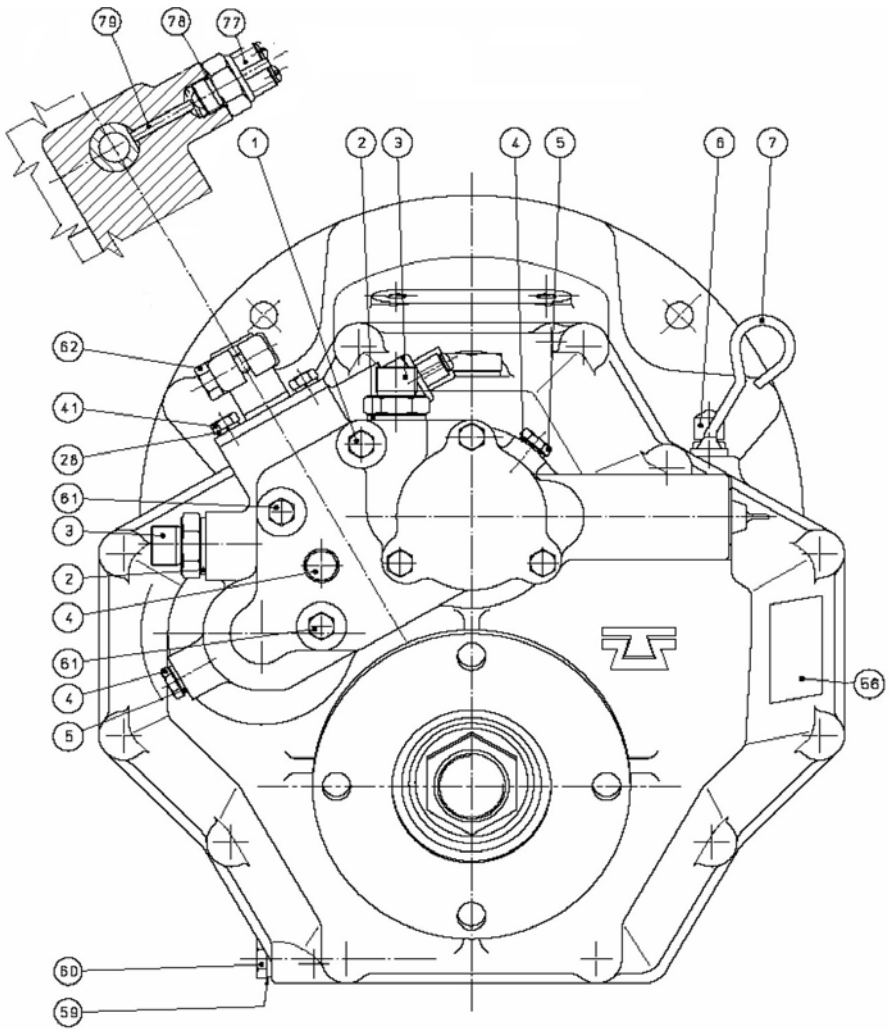

[NP] Not provided

TM-345 Gearbox

D_5023_2			Sheet 2/4		
FIG.	**REF.**	**QTY**	**DESCR.**	**FROM**	**UPTO**
33	24830113	1	Screw		

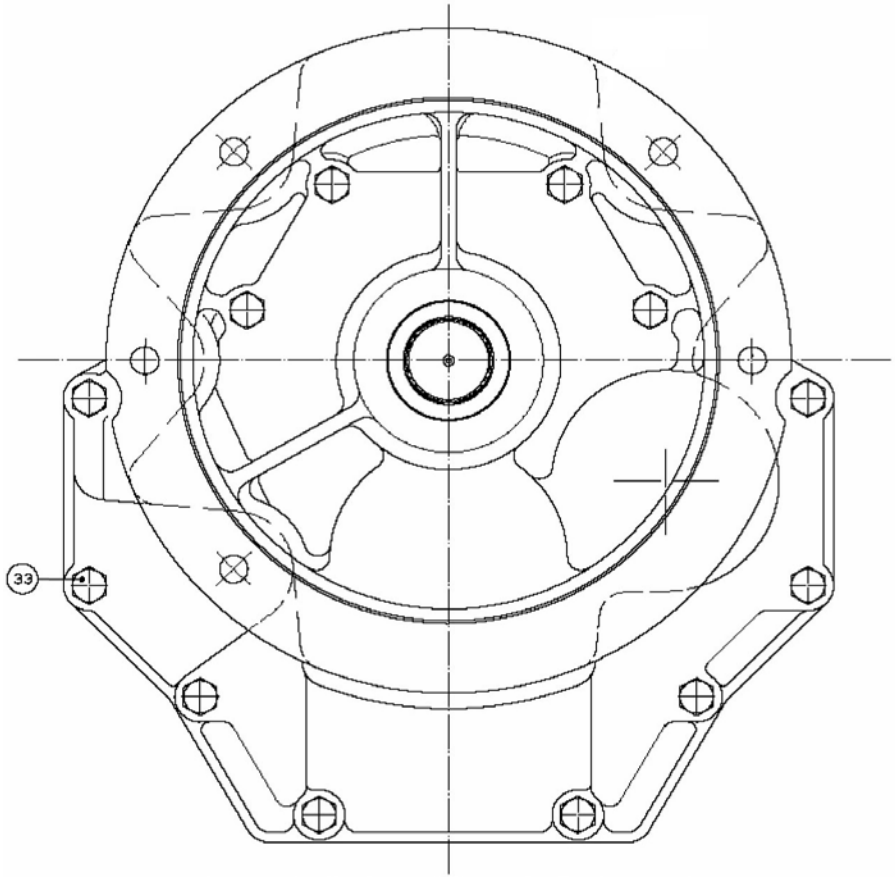

TM-345 Gearbox

	D_5023_3		Sheet 3/4		
FIG.	**REF.**	**QTY**	**DESCR.**	**FROM**	**UPTO**
8	24850323	2	Washer		
9-10	24850403	2	Clutch Plate Kit		
11	24850310	2	Ring		
12	24850307	2	Ring		
13	24850333	2	Spacer		
14	24850312	2	SEGER		
15A	24852203	1	Gear R. 1,54 TM 345		
15B	24853203	1	Gear R. 2 TM 345		
15C	24854203	1	Gear R. 2,47 TM 345		
16	24850012	1	Plug		
17	24850318	4	Ring		
18	24850306	4	Bearing, needle		
19	24850325	2	Washer		
20	24850308	2	Conical Roller Bearing 32305		
21	24850328	4	Washer		
22	24810326	2	Plug		
23	24850016	1	Bushing		
24	24850020	1	PUMB Box		
25	24850015	1	Pump Cover		
27	24850029	3	Screw		
28	24810042	9	Washer GROWER DIN 127-6 [NP]		
29	24850095	1	Gear, Pump Out		
30	24850094	1	Pump Shaft		
31	24850096	1	Gear, Pump INNER		
32	24850097	1	O-Ring D. 50X1,7		
34	24850099	1	Nut		
35	24850224A	1	Flange, Output TM-345A		
36	24840103	1	Grommet		
37	24850212	1	Conical Roller Bearing 30207A		
38	24850001A	1	Front Body TM-345A		
39A	24852210	1	Gear R. 1,54 TM 345		
39B	24853210	1	Gear R. 2 TM 345		
39C	24854210	1	Gear R. 2,47 TM 345		
40	24850013	2	Pin		
42	24850080	1	Plate Pipe		

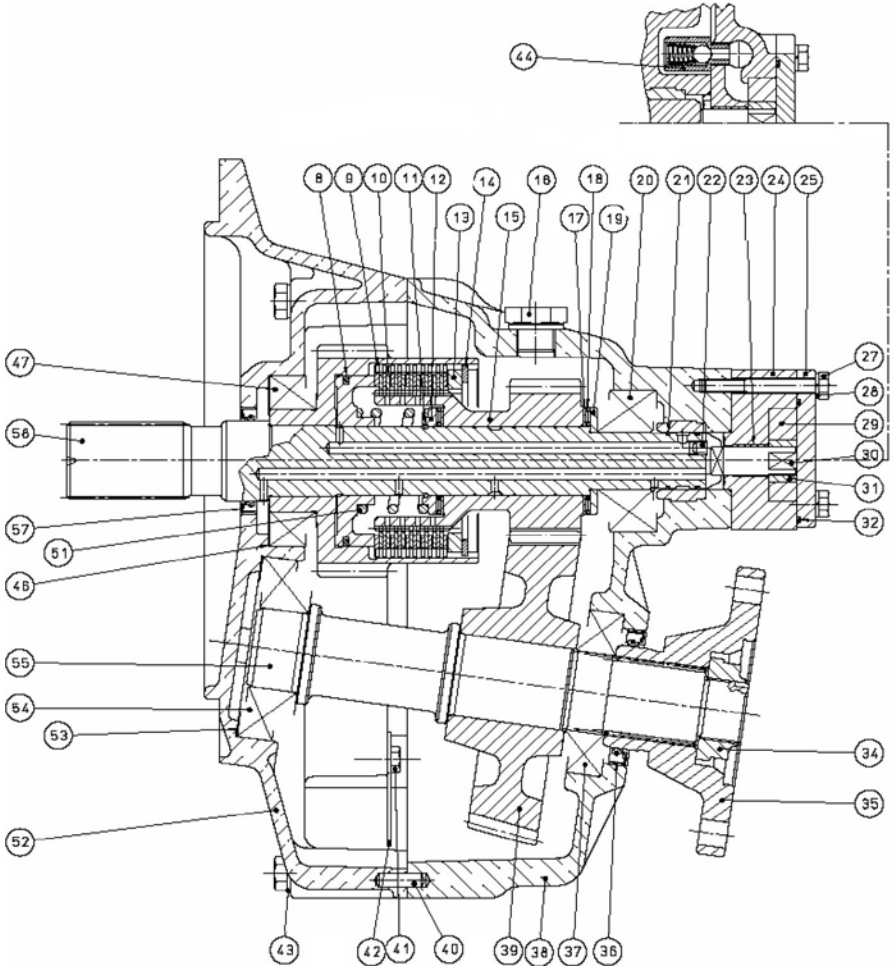

[NP] Not provided

TM-345 Gearbox

	D_5023_3		Sheet 3/4		
FIG.	**REF.**	**QTY**	**DESCR.**	**FROM**	**UPTO**
43	24850093	12	Washer		
44	24850063	1	By pass Valve		
46	24850108	6	Shim Adjusting		
47	24850104	2	Conical Roller Bearing 32009-X		
51	24850122	2	Spring		
52	24850207A	1	Cover TM-345A		
53	24810333	3	Spacer		
54	24850206	1	Conical Roller Bearing 31307A		
55	24850201	1	Output Shaft		
57	24810103S	1	Grommet, Oil SILICON		
58	24850101	1	Input Shaft		

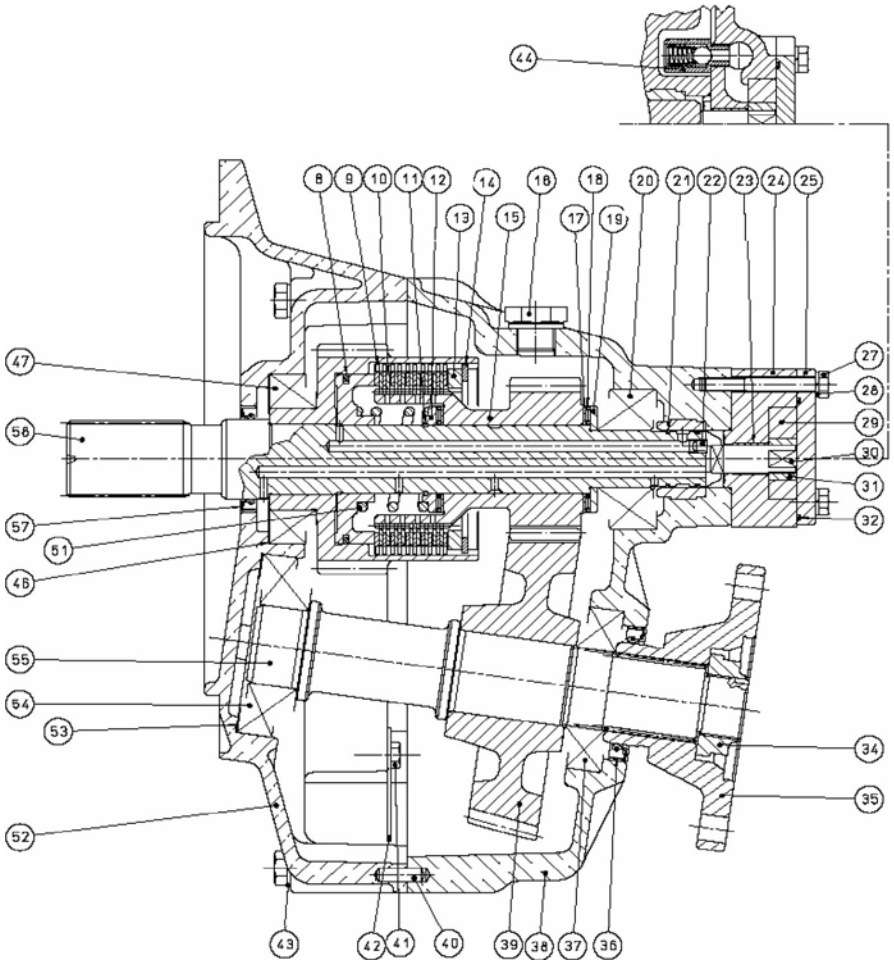

TM-345 Gearbox

	D_5023_4		Sheet 4/4		
FIG.	**REF.**	**QTY**	**DESCR.**	**FROM**	**UPTO**
45A	24852203	1	Gear R. 1,54 TM 345		
45B	24853203	1	Gear R. 2 TM 345		
45C	24854203	1	Gear R. 2,47 TM 345		
48	24850124	2	Piston		
49	24850301	1	INTERMEDIATE Shaft		
50	24850330	1	Bell		
63	24810056	2	O-Ring D. 15,08X2,62 [NP]		
64	24850081	1	Aspiration Tube		
65	24810035	1	Oil Filter		
66	24850085	1	Pin		
67	24850059	1	O-Ring D. 50X5,3		
68	24850076	1	Spacer		
69	24850057	1	Nut		
70	24850030	1	Spring		
71	24810424	1	Lever		
72	24810041	1	Support		
73	24850062	1	Selector Valve		
74	24850052	1	Valve		
75	24850078	1	Spring		
76	24850079	1	Screw		

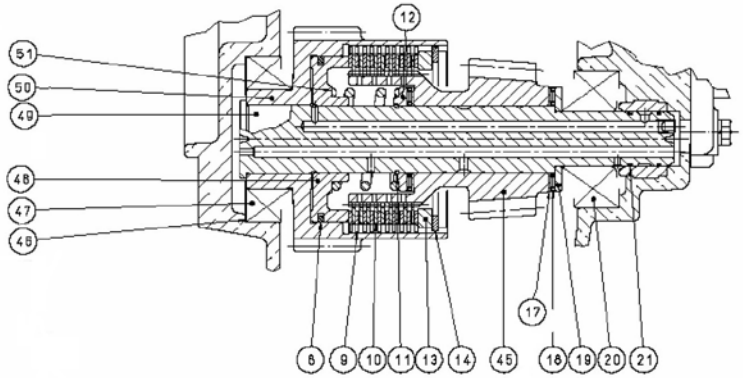

INTERMEDIATE SHAFT ASSEMBLY

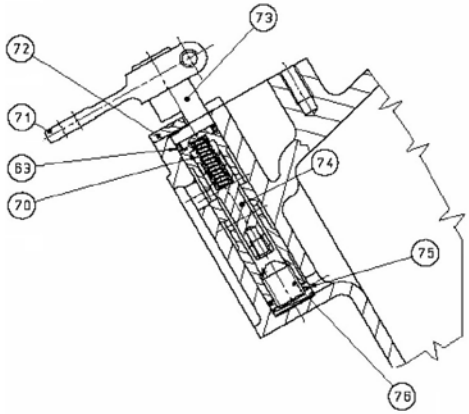

SELECTOR VALVE ASSEMBLY

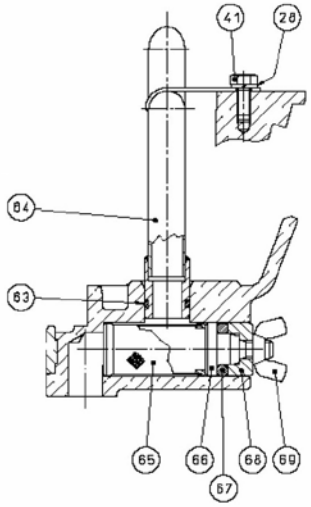

OIL FILTER ASSEMBLY

[NP] Not provided

TM-345 Gearbox

	D_5023_5		Maintenance Kit		
FIG.	**REF.**	**QTY**	**DESCR.**	**FROM**	**UPTO**
1	24850401	1	Kit Gasket		
2	A0105000	1	15W40 Sole Diesel Oil 5L		
3	24850403	2	Clutch Plate Kit		

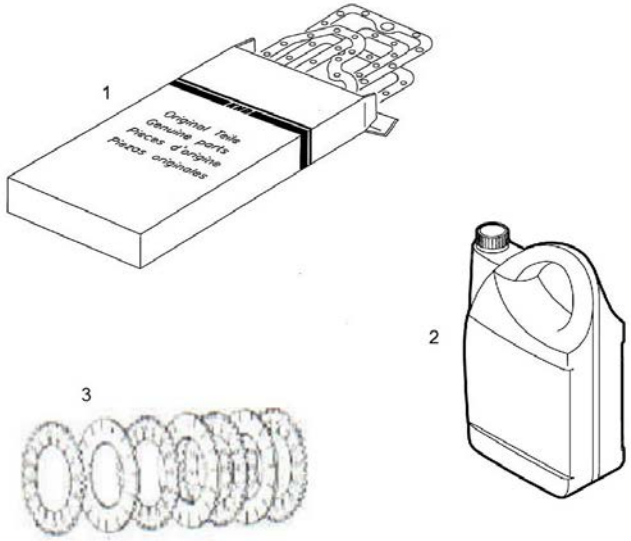

SP60 S.Drive

D_5037_1			Sheet 1/4 SP60 S.Drive V1		
FIG.	REF.	QTY	DESCR.	FROM	UPTO
13	24813500.13	1	Body [NP]		
26	24813500.26	6	Washer		
27	24860047	6	Bolt DIN 912 M8-30 8.8 [NP]		
38	24813500.38	1	Bracket Control		
39	24810424	1	Lever		
40	24810047	1	Bolt DIN 933 M8-25 8.8 [NP]		
50	24813500.50	1	Flange CLOSING MEMBRANE		
53	24810063	2	Plane Washer		
54	24810065	1	Plug		
55	24813500.55	1	Gauge Oil LEVEL		
59	24813500.59	1	Body		
71	24813500.71	8	Washer [NP]		
72	24813500.72	8	Screw		
73	24813500.73	1	Propeller Shaft		
78	24813500.78	1	Body		
84	24813500.84	1	Anode SP60		
85	24813500.85	1	Spacer		
87	24813500.87	1	Plug,oil drain		
89	24813500.89	4	Bolt DIN 933 M6-10 8.8 [NP]		

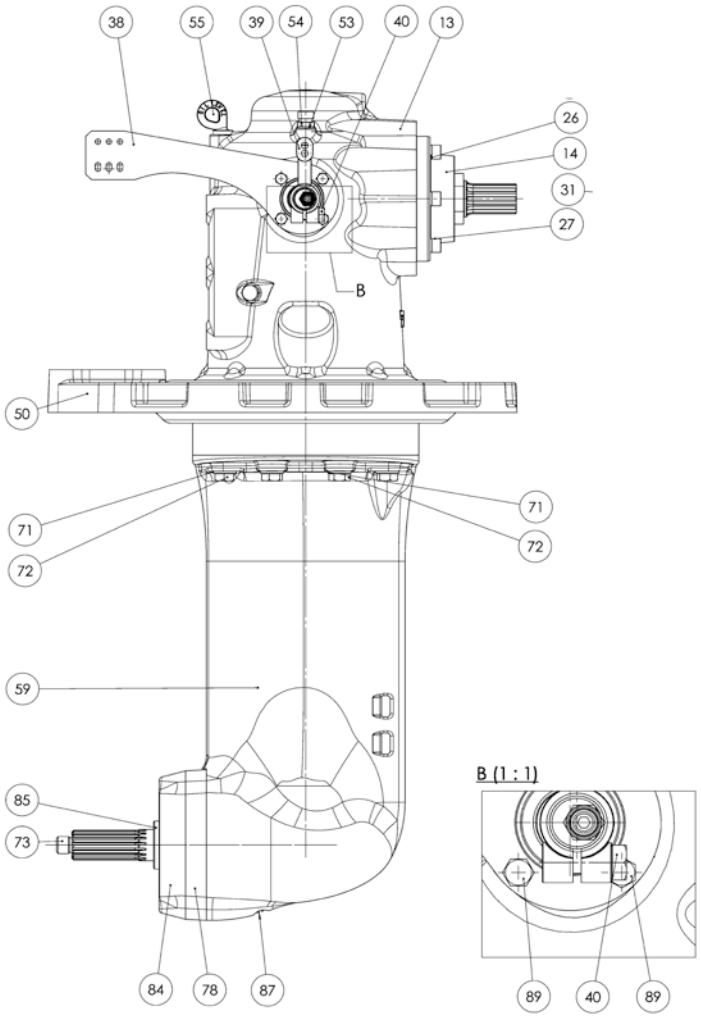

[NP] Not provided

	D_5037_2		Sheet 2/4 SP60 S.Drive V1		
FIG.	REF.	QTY	DESCR.	FROM	UPTO
14	24813500.14	1	Body		
28	24813500.28	1	Body Control		
29	24860404	1	Oil Seal		
31	24860402	1	Shaft		
35	24860423	1	PAD		
43	24810522	1	Washer		
44	24813500.44	1	Plug [NP]		
45	24813500.45	1	Cover		
51	24813500.51	1	Plug [NP]		
52	24860006	1	ATF Oil Plate		
92	24830035	1	Washer		
93	24813500.93	1	Plug		

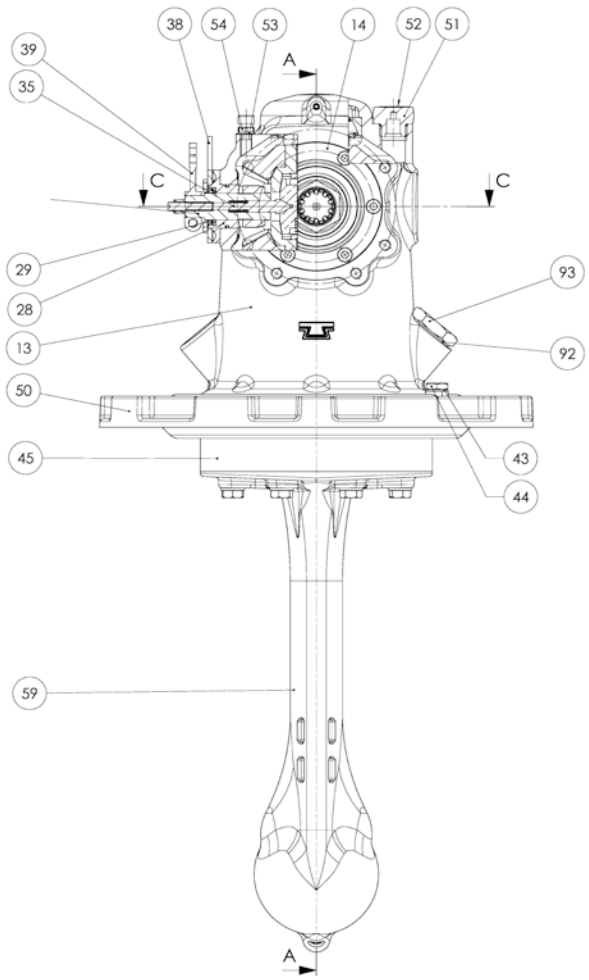

[NP] Not provided

	D_5037_3		Sheet 3/4 SP60 S.Drive V1		
FIG.	REF.	QTY	DESCR.	FROM	UPTO
1	24813500.01	1	Shaft,Output [NP]		
2	24813500.02	1	Cone Clutch		
3	24813500.03	4	Spacer [NP]		
4	24860217	2	Spacer		
5	24813500.05	2	Ring,Bearing		
6	24813500.06	4	Bearing, needle		
7	24813500.07	2	Gear		
8	24813500.08	2	Cover		
9	24813500.09	2	Nut		
10	24813500.10	2	Bearing		
11	24810333	2	Spacer		
12	24813500.12	1	Spring		
17	24813500.17	1	Shaft		
20	24813500.20	1	Screw		
41	24813500.41	1	Gasket		
42	24813500.42	1	Gasket		
46	24813500.46	2	O-Ring		
57	24810506	1	Screw		
60	24813500.60	1	Shaft		
61	24813500.61	1	Ring		
62	24860206	1	Conical Roller Bearing 32005		
63	24813500.63	1	Guide [NP]		
64	24813500.64	1	CIRClip		
65	24813500.65	1	O-Ring		
66	24813500.66	1	Bearing		
67	24813500.67	2	Spacer		
68	24813500.68	1	Gear		
69	24813500.69	2	Washer [NP]		
70	24813500.70	1	Nut		
74	24813500.74	1	Gear		
75	24850108	2	Shim Adjusting		
76	24813500.76	1	Bushing		
77	24813500.77	2	HELICOil		
79	24813500.79	2	Oil Seal		
80	24813500.80	2	O-Ring D. 90X3,5		

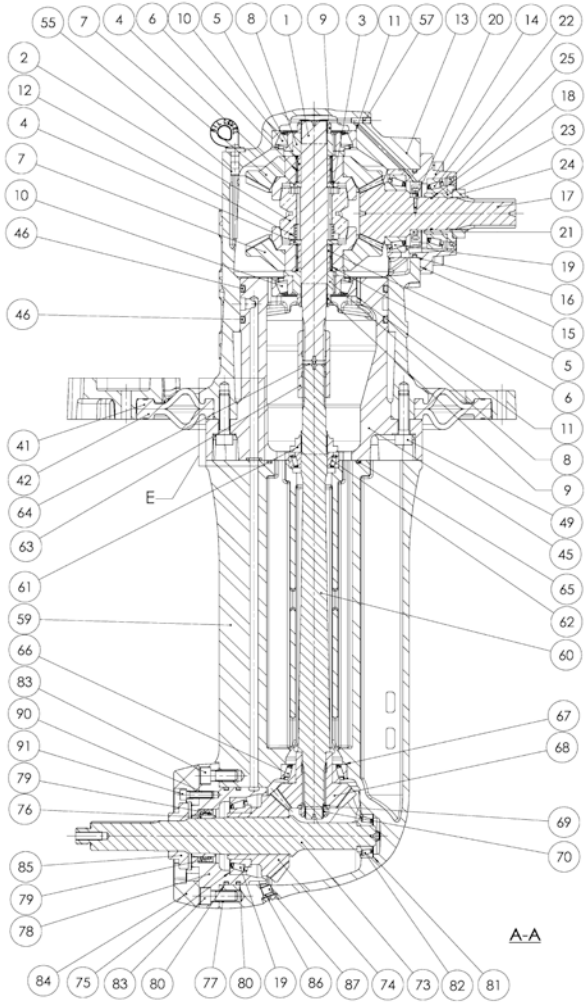

[NP] Not provided

D_5037_3			Sheet 3/4 SP60 S.Drive V1		
FIG.	REF.	QTY	DESCR.	FROM	UPTO
81	24813500.81	3	Spacer		
82	24813500.82	1	Bearing		
83	24813500.83	2	Screw		
86	24813500.86	1	O-Ring D. 8X1,5		
90	24813500.90	3	HELICOil [NP]		
91	24813500.91	3	Screw		

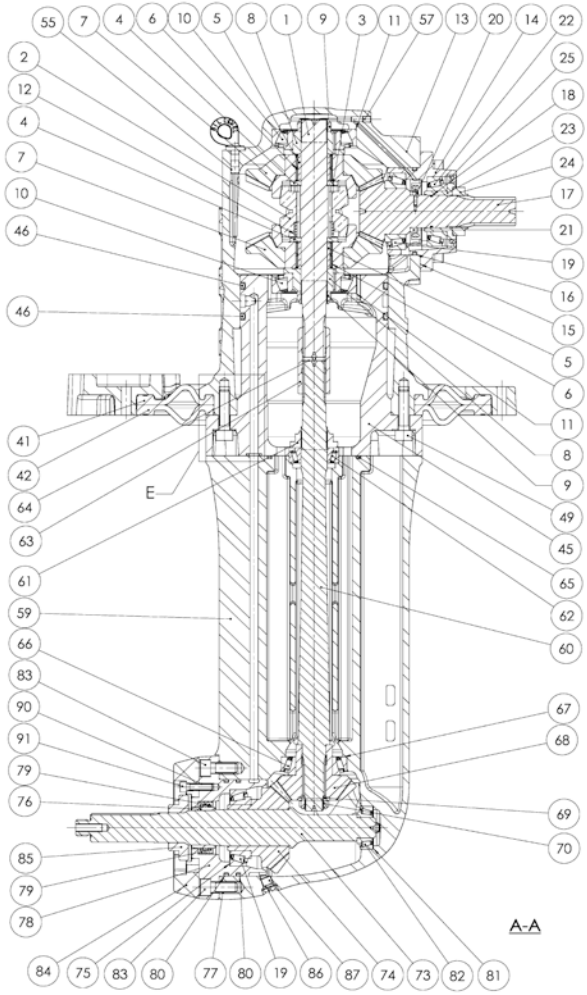

D_5037_4			Sheet 4/4 SP60 S.Drive V1		
FIG.	REF.	QTY	DESCR.	FROM	UPTO
15	24813500.15	2	Spacer		
16	24813500.16	1	O-Ring		
18	24813500.18	1	O-Ring		
19	24850104	2	Conical Roller Bearing 32009-X		
21	24813500.21	1	Impeller		
22	24813500.22	1	Bearing		
23	24813500.23	1	Cover		
24	24813500.24	1	Nut		
25	24813500.25	1	Oil Seal		
30	24860417	1	O-Ring		
32	24860419	1	Pin		
33	24860418	1	Pin DIN 1481 3-20 [NP]		
34	24860411	1	Spring		
36	24860409	1	Screw		
37	24860408	1	Nut DIN 985 M8 5.6 [NP]		
47	24813500.47	1	O-Ring		
48	24813500.48	8	Washer [NP]		
49	24813500.49	8	Screw		
56	24850011	1	Plug,oil drain		
58	24850005	1	Plate, IDENTIFICATION		
88	24813500.88	4	Screw [NP]		

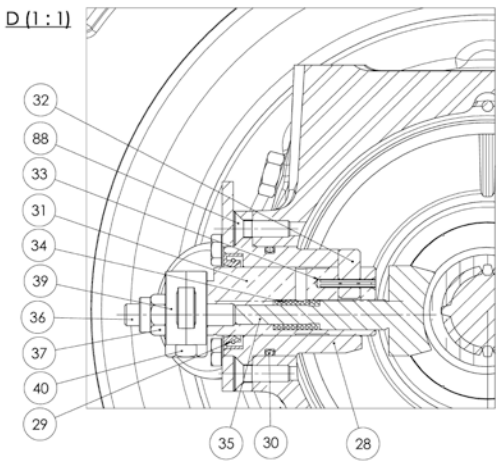

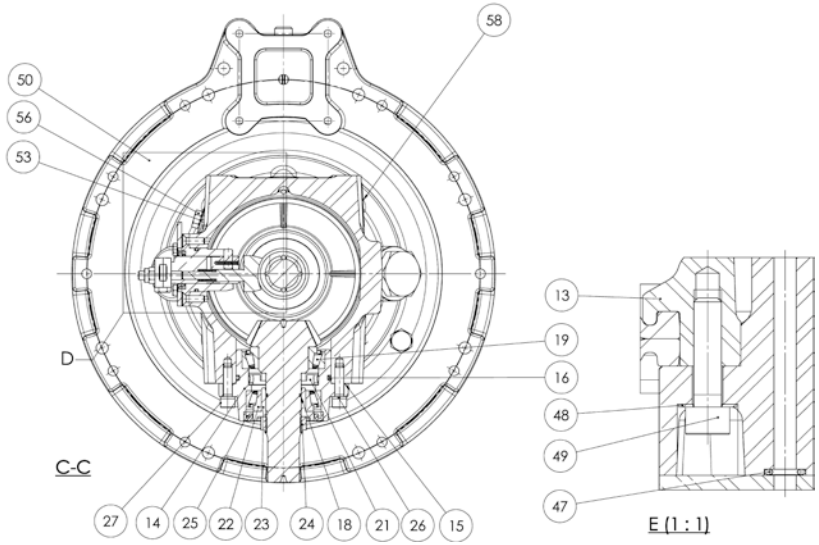

[NP] Not provided

D_5037_6			Sheet 1/4 SP60 S.Drive V2		
FIG.	REF.	QTY	DESCR.	FROM	UPTO
1	24813500.38	1	Bracket Control	27/09/2016	
2	24813500.95	1	Bracket [NP]	27/09/2016	
3	24813500.59	1	Body	27/09/2016	
4	24813500.13.1	1	Body	27/09/2016	
5	24813500.14	1	Body	27/09/2016	
7	24813500.104.1	1	Body	27/09/2016	
17	24813500.94	1	Spacer	27/09/2016	
25	24813500.73	1	Propeller Shaft	27/09/2016	
28	24813500.78	1	Body	27/09/2016	
31	24813500.96	1	Flexible	27/09/2016	
34	24810424	1	Lever	27/09/2016	
38	24813500.50	1	Flange CLOSING MEMBRANE	27/09/2016	
40	24813500.116	1	Zinc Anode	27/09/2016	
41	24810065	1	Plug	27/09/2016	
54	24813500.123	1	Screw	27/09/2016	
74	24810063	2	Plane Washer	27/09/2016	
77	24813500.126	8	Washer	27/09/2016	
79	24820075	6	Washer GROWER DIN 127-10 [NP]	27/09/2016	
80	24850093	12	Washer	27/09/2016	
82	24813500.26	6	Washer	27/09/2016	
88	24830106	12	Bolt DIN 933 M8-30 8.8 [NP]	27/09/2016	
89	24860047	6	Bolt DIN 912 M8-30 8.8 [NP]	27/09/2016	
90	24820076	6	Bolt DIN 933 M10-30 8.8 [NP]	27/09/2016	

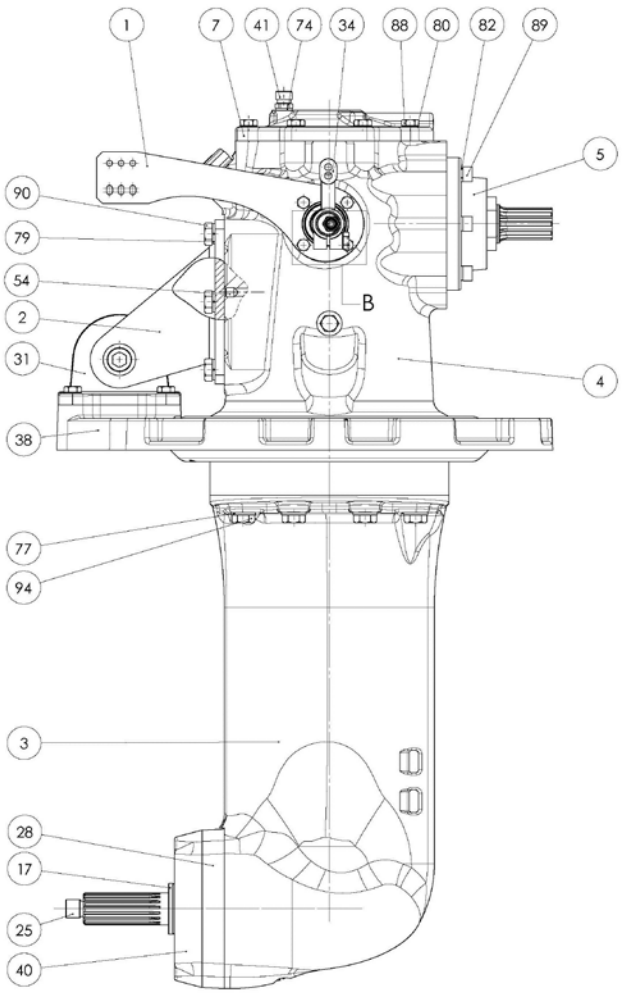

[NP] Not provided

D_5037_7			Sheet 2/4 SP60 S.Drive V2		
FIG.	REF.	QTY	DESCR.	FROM	UPTO
6	24813500.28	1	Body Control	27/09/2016	
104	24813500.131	1	Nut	27/09/2016	
29	24813500.45	1	Cover	27/09/2016	
50	24813500.121	1	Gauge Oil Level	27/09/2016	
56	24813500.124	1	Plug	27/09/2016	
58	24850011	1	Plug,oil drain	27/09/2016	
59	24813500.93	1	Plug	27/09/2016	
75	24830035	1	Washer	27/09/2016	
76	24810522	1	Washer	27/09/2016	
87	24810047	1	Bolt DIN 933 M8-25 8.8 [NP]	27/09/2016	
94	24813500.72	8	Screw	27/09/2016	

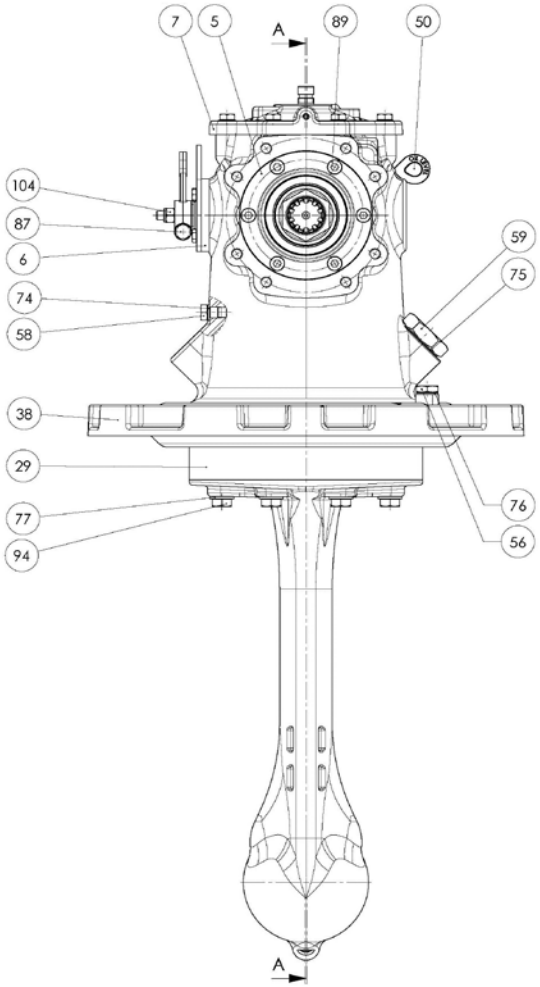

[NP] Not provided

	D_5037_8		Sheet 3/4 SP60 S.Drive V2		
FIG.	**REF.**	**QTY**	**DESCR.**	**FROM**	**UPTO**
8	24813500.42	1	Gasket	27/09/2016	
9	24813500.41	1	Gasket	27/09/2016	
10	24810333	6	Spacer	27/09/2016	
100	24813500.10	2	Bearing	27/09/2016	
101	24850104	2	Conical Roller Bearing 32009-X	27/09/2016	
102	24813500.77	2	HELICOil	27/09/2016	
103	24813500.130	3	Helicoil	27/09/2016	
11	24813500.67	2	Spacer	27/09/2016	
12	24850108	2	Shim Adjusting	27/09/2016	
13	24813500.15	2	Spacer	27/09/2016	
14	24813500.113	2	Spacer	27/09/2016	
15	24813500.81	3	Spacer	27/09/2016	
16	24813500.85	1	Spacer	27/09/2016	
18	24860217	2	Spacer	27/09/2016	
20	24813500.12	1	Spring	27/09/2016	
22	24813500.114	1	Shaft, Output	27/09/2016	
23	24813500.17	1	Shaft	27/09/2016	
24	24813500.60	1	Shaft	27/09/2016	
27	24860006	1	ATF Oil Plate	27/09/2016	
30	24813500.23	1	Cover	27/09/2016	
32	24813500.115	2	Bearing Support	27/09/2016	
35	24813500.61	1	Ring	27/09/2016	
36	24813500.09	2	Nut	27/09/2016	
37	24813500.24	1	Nut	27/09/2016	
39	24813500.76	1	Bushing	27/09/2016	
42	24813500.87	1	Plug,oil drain	27/09/2016	
44	24813500.21	1	Impeller	27/09/2016	
45	24813500.02	1	Cone Clutch	27/09/2016	
46	24813500.117	2	Gear	27/09/2016	
47	24813500.118	1	Gear	27/09/2016	
48	24813500.119	1	Pinion	27/09/2016	
49	24813500.120	1	Shaft Coupling	27/09/2016	
51	24813500.122	2	Washer	27/09/2016	
52	24813500.70	1	Nut	27/09/2016	
55	24813500.05	2	Ring,Bearing	27/09/2016	

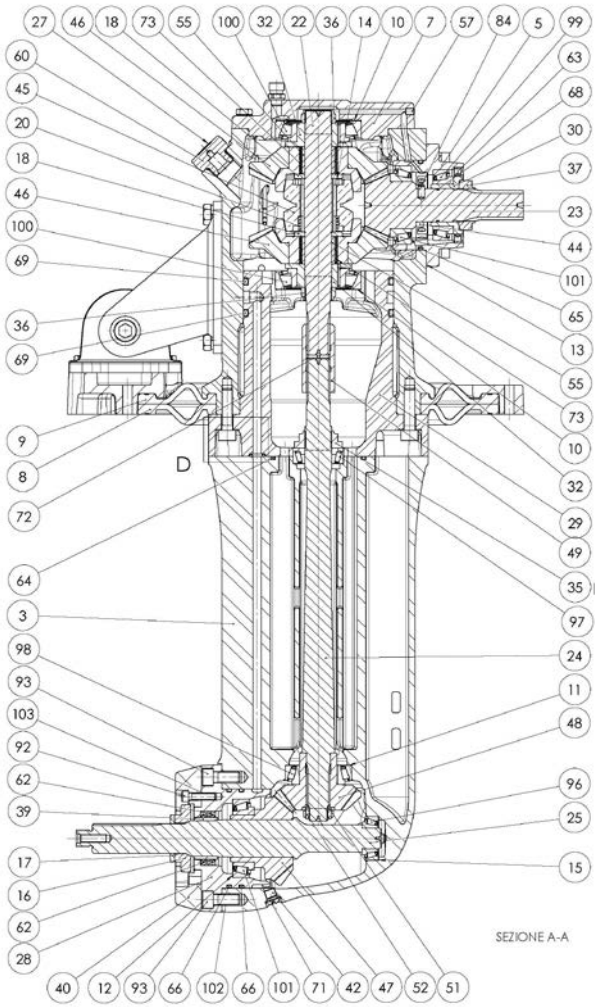

D_5037_8			Sheet 3/4 SP60 S.Drive V2		
FIG.	**REF.**	**QTY**	**DESCR.**	**FROM**	**UPTO**
57	24810326	1	Plug	27/09/2016	
60	24813500.125	1	Plug	27/09/2016	
62	24813500.79	2	Oil Seal	27/09/2016	
63	24813500.25	1	Oil Seal	27/09/2016	
64	24813500.65	1	O-Ring	27/09/2016	
65	24813500.16	1	O-Ring	27/09/2016	
66	24813500.80	2	O-Ring D. 90X3,5	27/09/2016	
68	24813500.18	1	O-Ring	27/09/2016	
69	24813500.46	2	O-Ring	27/09/2016	
71	24813500.86.1	1	O-Ring	27/09/2016	
72	24813500.64	1	CIRClip	27/09/2016	
73	24813500.06	4	Bearing, needle	27/09/2016	
84	24813500.128	1	Pin	27/09/2016	
92	24813500.91	3	Screw	27/09/2016	
93	24813500.83	2	Screw	27/09/2016	
96	24813500.82	1	Bearing	27/09/2016	
97	24860206	1	Conical Roller Bearing 32005	27/09/2016	
98	24813500.66	1	Bearing	27/09/2016	
99	24813500.22	1	Bearing	27/09/2016	

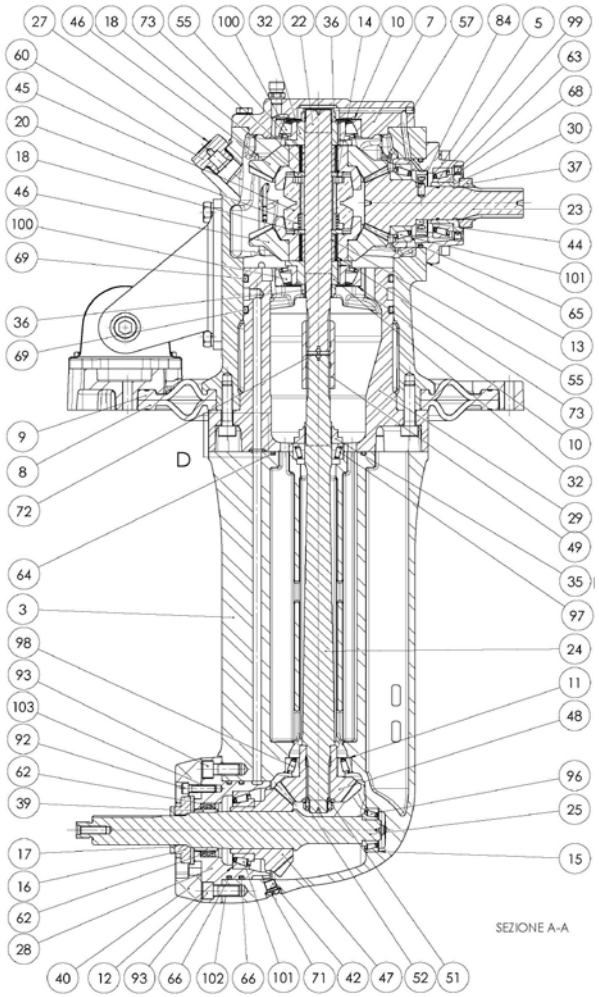

D_5037_9			Sheet 4/4 SP60 S.Drive V2		
FIG.	REF.	QTY	DESCR.	FROM	UPTO
105	24813500.99	1	Nut [NP]	27/09/2016	
19	24860411	1	Spring	27/09/2016	
21	24860402	1	Shaft	27/09/2016	
26	24850005	1	Plate, IDENTIFICATION	27/09/2016	
33	24860419	1	Pin	27/09/2016	
43	24860423	1	PAD	27/09/2016	
53	24860409	1	Screw	27/09/2016	
61	24860404	1	Oil Seal	27/09/2016	
67	24860417	1	O-Ring	27/09/2016	
70	24813500.47	1	O-Ring	27/09/2016	
78	24813500.97	2	Washer DIN 125-14 [NP]	27/09/2016	
81	24813500.127	8	Washer	27/09/2016	
83	24860418	1	Pin DIN 1481 3-20 [NP]	27/09/2016	
85	24813500.89	4	Bolt DIN 933 M6-10 8.8 [NP]	27/09/2016	
86	24813500.129	4	Screw	27/09/2016	
91	24813500.98	1	Bolt	27/09/2016	
95	24813500.49	8	Screw	27/09/2016	

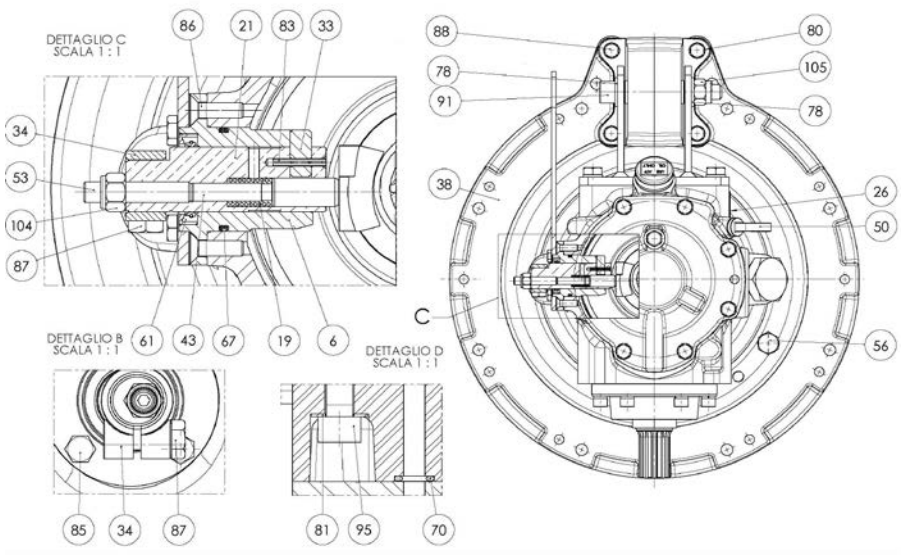

[NP] Not provided

	D_5037_5		Maintenance Kit		
FIG.	REF.	QTY	DESCR.	FROM	UPTO
1	24813401	1	Kit Gasket		
2	A0201000	3	ATF Sole Diesel Oil 1L		
NS	24813500.84	1	Anode SP60 [NS]		

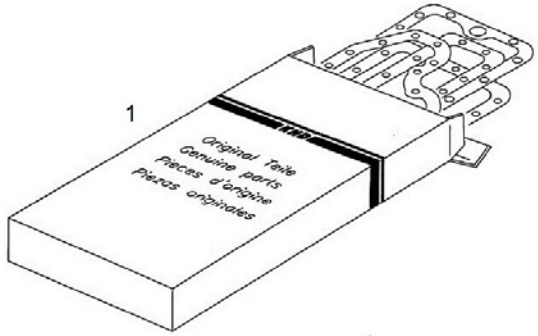

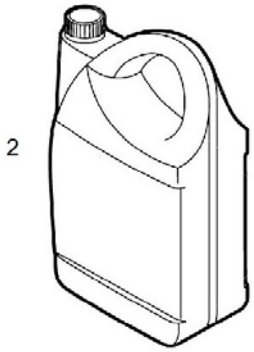

[NS] Not shown

Gearbox TMC-40P

	D_5033_1		Sheet 1/2		
FIG.	**REF.**	**QTY**	**DESCR.**	**FROM**	**UPTO**
1	24860002P	1	Box		
2	24860208	1	Gear Ratio 3:1		
4	24860001P	1	Cover		
6	24860076	2	Shim		
7	24860307	1	Washer		
8	24860217	4	Spacer		
9	24860304	1	Spacer		
11	24863101	1	Input Shaft		
11	24864101	1	INPUT Shaft		
12	24860201	1	Output		
14	24860301	1	INTERMEDIATE Shaft		
19	24860222	2	Nut		
20	24810065	1	Plug		
22	24860202	1	Clutch		
23	24860302	1	Gear		
24	24860210	1	Gear		
25	24863203	1	Gear R.2,00		
25	24864203	1	Gear R.2,60		
26	24860224	1	Flange Output		
27	24860008P	1	Gauge		
29	24860205	2	CAGE		
31	24830011	1	Plug		
33	24860103	2	Oil Seal		
35	24860204	2	Bearing, needle		
36	24860306	2	Bearing, needle		
37	24860104	1	Ball Bearing 6304		
38	24860105	1	Bearing		
39	24810063	1	Plane Washer		
40	56000081	1	Washer 20-26-1,5		
43	24860092	8	Washer		
44	24850093	4	Washer		
46	24860023	2	Pin		
47	52102158	8	Bolt DIN 933 M6-25 8.8		
50	52105258	1	Bolt DIN 7991 M8-25 10.9		
51	52103259	4	Bolt DIN 912 M8-30 8.8		

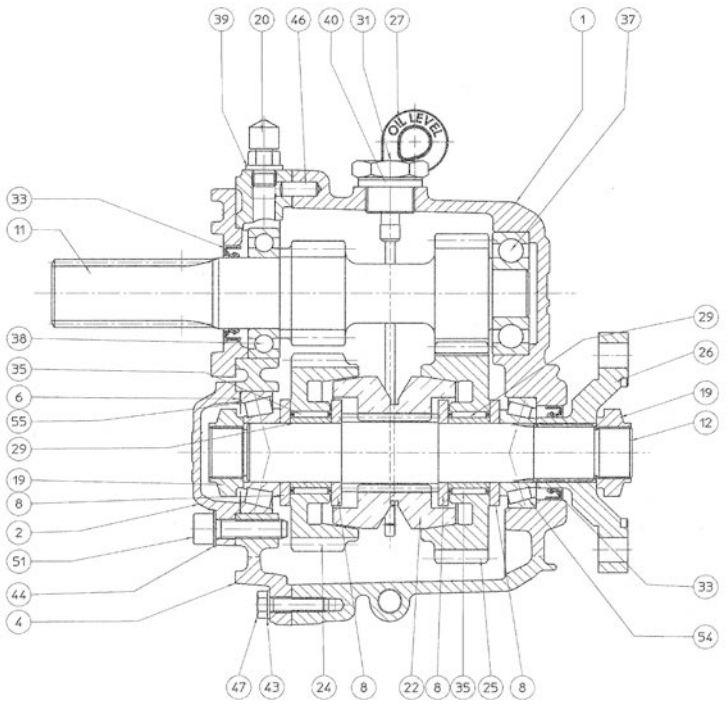

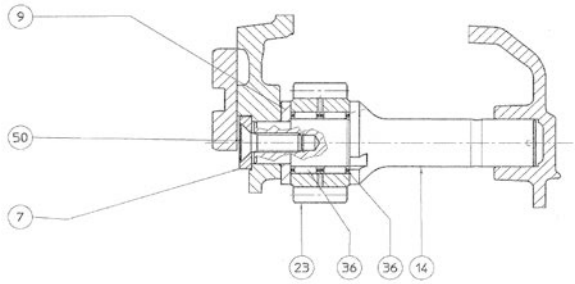

[NS] Not shown

Gearbox TMC-40P

	D_5033_1		Sheet 1/2		
FIG.	**REF.**	**QTY**	**DESCR.**	**FROM**	**UPTO**
54	24860206	1	Conical Roller Bearing 32005		
55	24860207	1	Conical Roller Bearing 30205A		
NS	24860450	1	Kit GasketS [NS]		

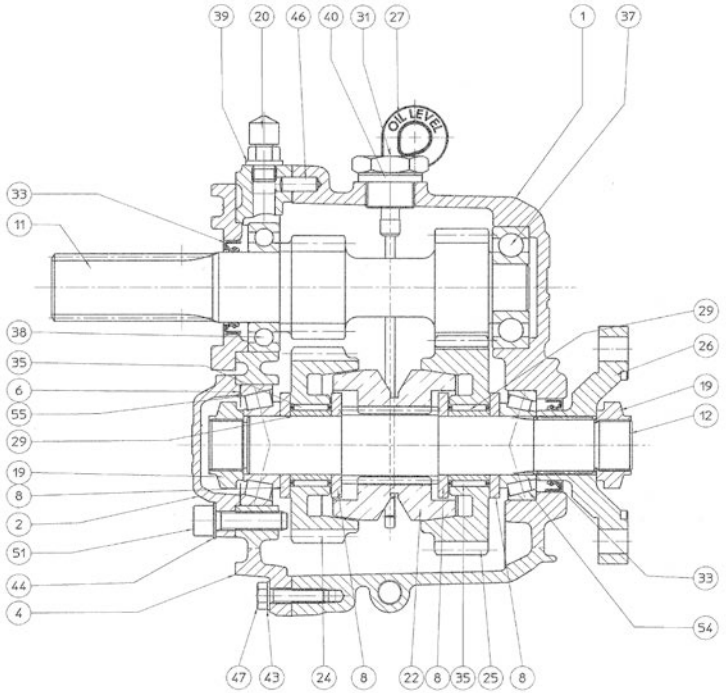

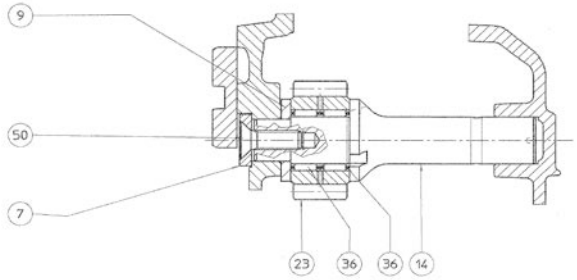

Gearbox TMC-40P

D_5033_2			Sheet 2/2		
FIG.	REF.	QTY	DESCR.	FROM	UPTO
3	24860401	1	Cover		
5	24860003P	1	Cover		
10	24860411	1	Spring		
13	24860402	1	Shaft		
15	24850005	1	Plate, IDENTIFICATION		
16	24860006	1	ATF Oil Plate		
17	24860419	1	Pin		
18	24810424	1	Lever		
21	24860423	1	PAD		
28	24860409	1	Screw		
30	24850011	1	Plug,oil drain		
32	24860404	1	Oil Seal		
34	24860417	1	O-Ring		
39	24810063	1	Plane Washer		
41	24810530	2	Washer DIN 125-8 [NP]		
42	24810014	2	Washer GROWER DIN 127-8 [NP]		
45	53052210	1	Pin DIN 1481 3-20		
48	52103157	6	Bolt DIN 912 M6-20 8.8		
49	52102258	1	Bolt DIN 933 M8-25 8.8		
52	24860011P	2	Stud		
53	24860071	2	STUD		
56	24810515	2	Nut DIN 934 M8 8.8 [NP]		
57	51123008	1	Nut DIN 985 M8 5.6		

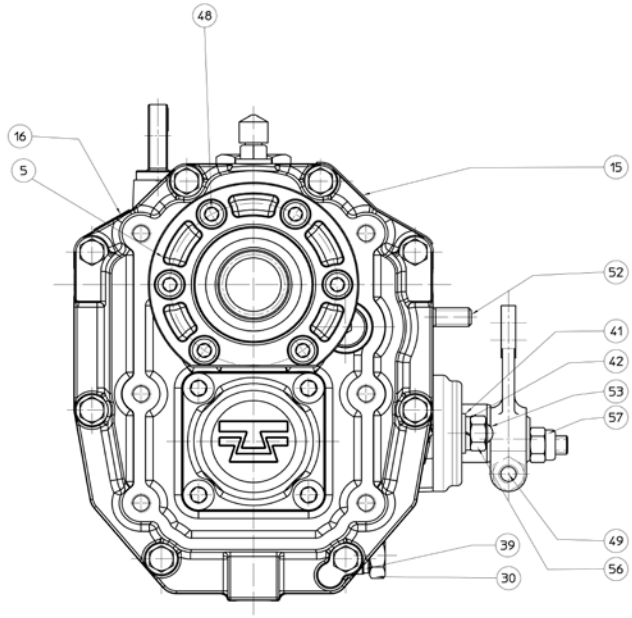

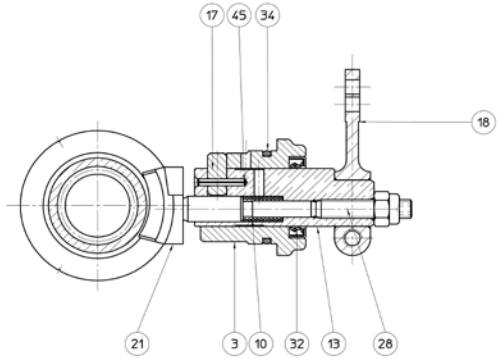

[NP] Not provided

Gearbox TMC-40P

	D_5033_3		Maintenance Kit		
FIG.	**REF.**	**QTY**	**DESCR.**	**FROM**	**UPTO**
1	24860450	1	Kit GasketS		
2	A0201000	2	ATF Sole Diesel Oil 1L		

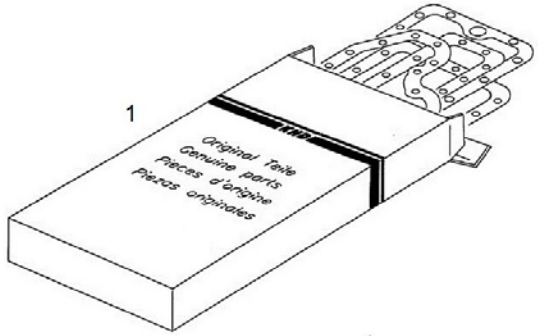

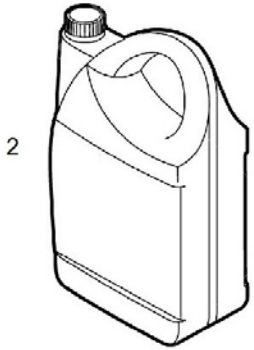

Gearbox TMC-60P

	D_5036_1		Sheet 1/2		
FIG.	REF.	QTY	DESCR.	FROM	UPTO
2	24880401	1	Cover		
8	24880306	1	Washer		
9	24860411	1	Spring		
10	24880402	1	Shaft		
14	24850005	1	Plate, IDENTIFICATION		
15	24860006	1	ATF Oil Plate		
16	24860419	1	Pin		
17	24810424	1	Lever		
21	24880311	1	Plug		
22	24880038	2	Plug		
23	24880423	1	Pad		
29	24860008P	1	Gauge		
31	24880409	1	Screw		
33	24850011	1	Plug,oil drain		
36	24860404	1	Oil Seal		
39	24860417	1	O-Ring		
44	24810530	2	Washer DIN 125-8 [NP]		
46	24810014	3	Washer GROWER DIN 127-8 [NP]		
49	24860418	1	Pin DIN 1481 3-20 [NP]		
51	24810047	8	Bolt DIN 933 M8-25 8.8 [NP]		
52	52103258	2	Bolt DIN 912 M8-25 8.8		
53	52101263	2	Bolt DIN 931 M8-50 8.8		
54	24860071	2	STUD		
57	24810515	2	Nut DIN 934 M8 8.8 [NP]		
59	51123008	1	Nut DIN 985 M8 5.6		

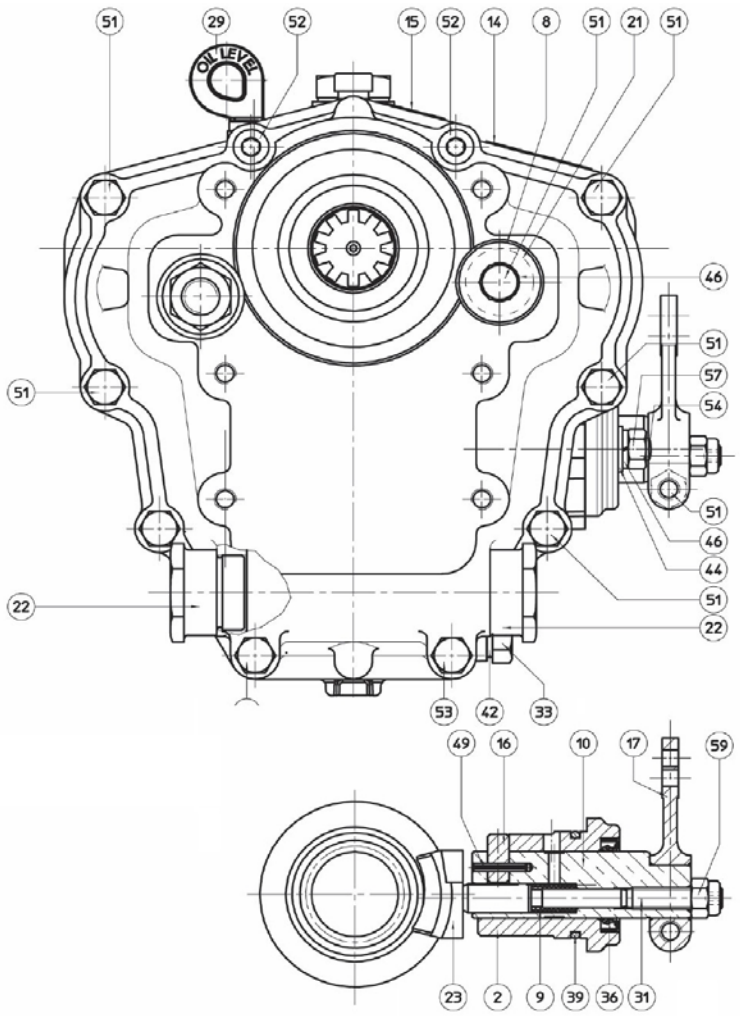

[NP] Not provided

Gearbox TMC-60P

	D_5036_2		Sheet 2/2		
FIG.	REF.	QTY	DESCR.	FROM	UPTO
1	24880002P	1	Box		
3	24880001	1	Cover		
4	24880305	2	Spacer		
5	24813500.67	6	Spacer		
6	24880218	2	Shim		
7	24880217	2	Shim		
11	24880301	1	INTERMEDIATE Shaft		
12	24880201	1	Shaft Output		
13A	24882101P	1	Input Shaft		
13B	24883101P	1	Input Shaft		
13C	24884101	1	Input Shaft		
13D	24885101P	1	Input Shaft		
18	24850099	1	Nut		
19	24880222	1	Nut		
20	24810065	1	Plug		
24	24880202	1	Clutch		
25A	24882203	1	Gear		
25B	24882203	1	Gear		
25C	24884203	1	Gear		
25D	24884203	1	Gear		
26A	24882203	1	Gear		
26B	24883210	1	Gear		
26C	24884210	1	Gear		
26D	24885210	1	Gear		
27	24880302	1	Gear		
28	24880224	1	Flange Output		
30	24880310	1	Nut		
32	24880205	2	CAGE		
34	24830011	1	Plug		
35	24880309	1	Ring		
37	24880103A	1	Seal,oil BA 30-47-7 [NP]		
38	24890214	1	Oil Seal		
40	24880204	2	Bearing, needle		
41	24880308	1	Washer		
42	24810063	2	Plane Washer		

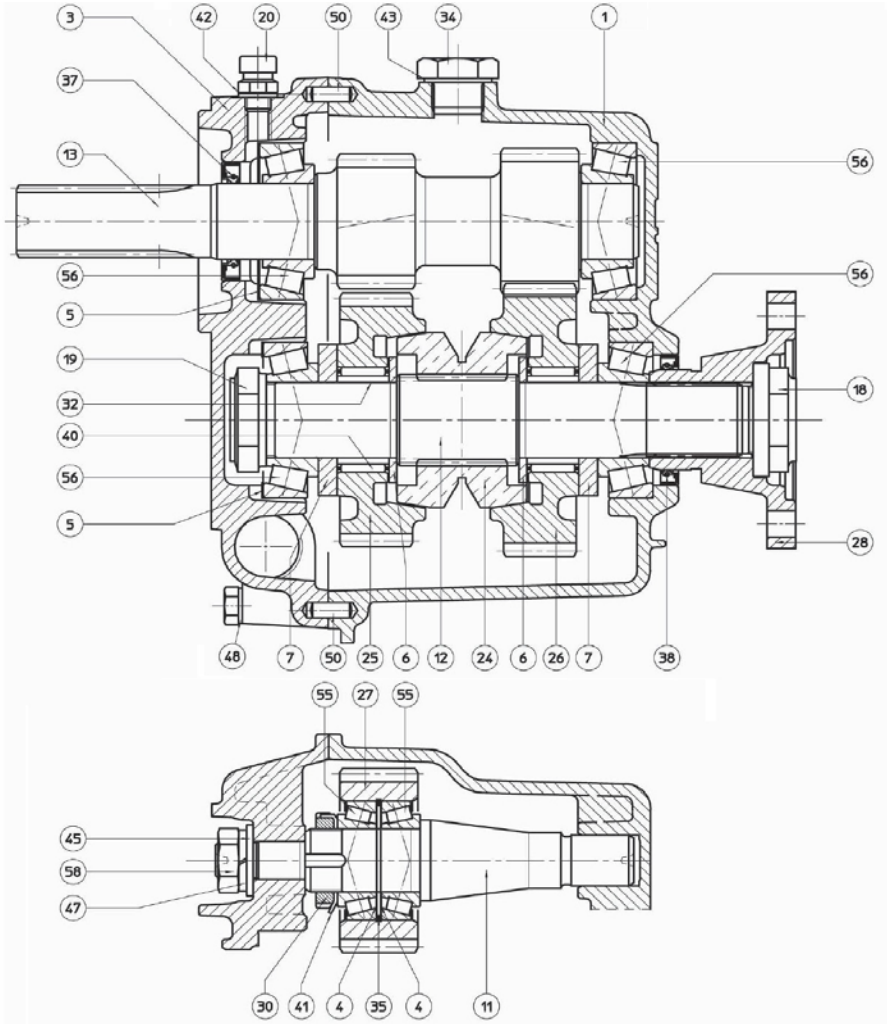

[NP] Not provided

Gearbox TMC-60P

	D_5036_2		Sheet 2/2		
FIG.	REF.	QTY	DESCR.	FROM	UPTO
43	56000083	1	Washer 21-26-1,5		
45	24813500.97	1	Washer DIN 125-14 [NP]		
47	24810221	1	Washer GROWER DIN 127-14 [NP]		
48	24850093	10	Washer		
50	24860023	2	Pin		
55	24860206	2	Conical Roller Bearing 32005		
56	25710104	4	Conical Roller Bearing 32206-J2/Q		
58	24880307	1	Nut		

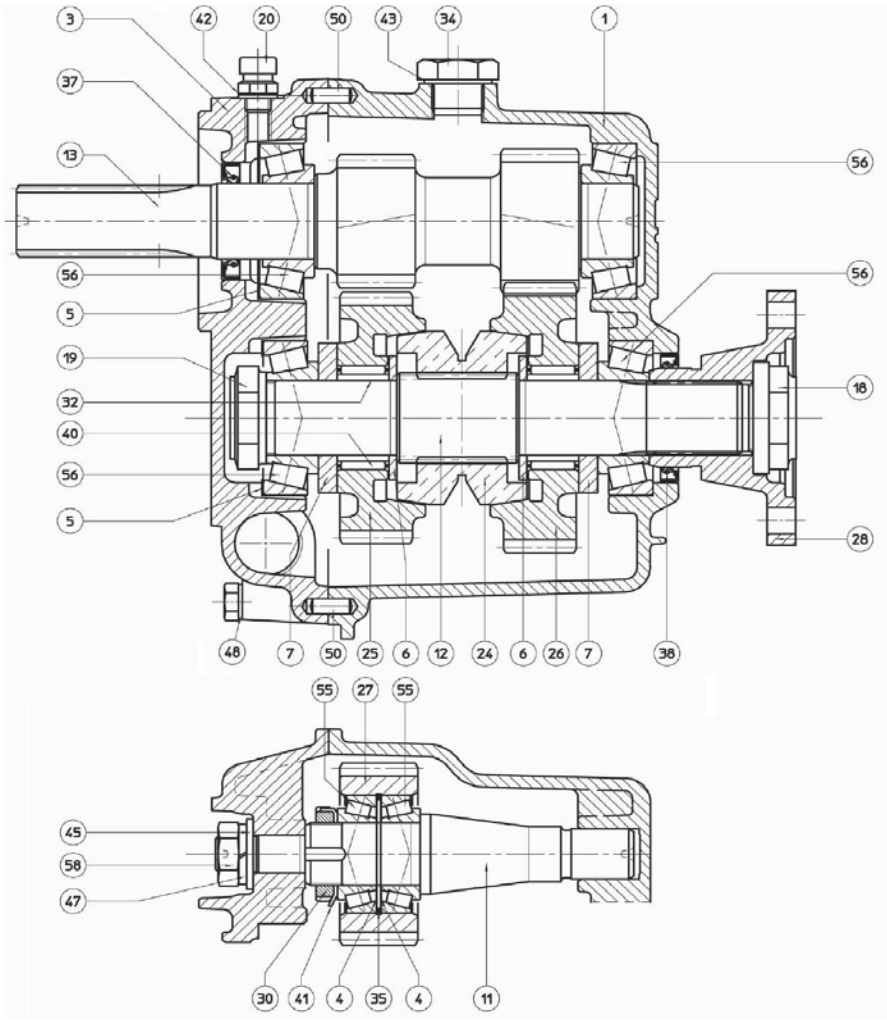

	D_5035_3		Kit de Service		
FIG.	**REF.**	**QTY**	**DESCR.**	**FROM**	**UPTO**
1	24883401	1	Gasket Kit		
2	A0201000	2	ATF Sole Diesel Oil 1L		

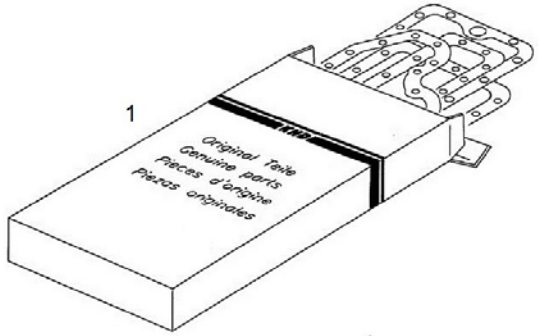

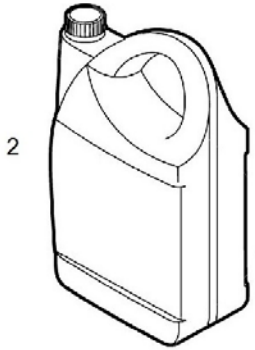

Gearbox TMC-60A

	D_5034_1		Sheet 1/2		
FIG.	REF.	QTY	DESCR.	FROM	UPTO
1	24880002A	1	Box		
3	24880001A	1	Cover		
4	24880305	2	Spacer		
5	24813500.67	6	Spacer		
6	24880218	2	Shim		
7	24880217	2	Shim		
10	24880301	1	INTERMEDIATE Shaft		
11	24880201	1	Shaft Output		
12A	24884101	1	Input Shaft		
12B	24883101A	1	Input Shaft		
17	24850099	1	Nut		
18	24880222	1	Nut		
21	24880202	1	Clutch		
22	24880302	1	Gear		
23A	24884210A	1	Gear		
23B	24883210A	1	Gear		
24	24883203A	1	Gear [NP]		
25	24880224	1	Flange Output		
27	24880310	1	Nut		
29	24880205	2	CAGE		
31	24830011	1	Plug		
32	24880309	1	Ring		
34	22210103	1	Seal,oil BA 30-47-7		
35	25210214	1	Seal,oil 40-52-7		
37	24880204	2	Bearing, needle		
38	24880308	1	Washer		
40	56000083	1	Washer 21-26-1,5		
42	51030014	1	Washer DIN 125-14		
44	53033014	1	Washer GROWER DIN 127-14		
45	24850093	10	Washer		
47	24860023	2	Pin		
52	24860206	2	Conical Roller Bearing 32005		
53	25710104	4	Conical Roller Bearing 32206-J2/Q		
55	24880307	1	Nut		

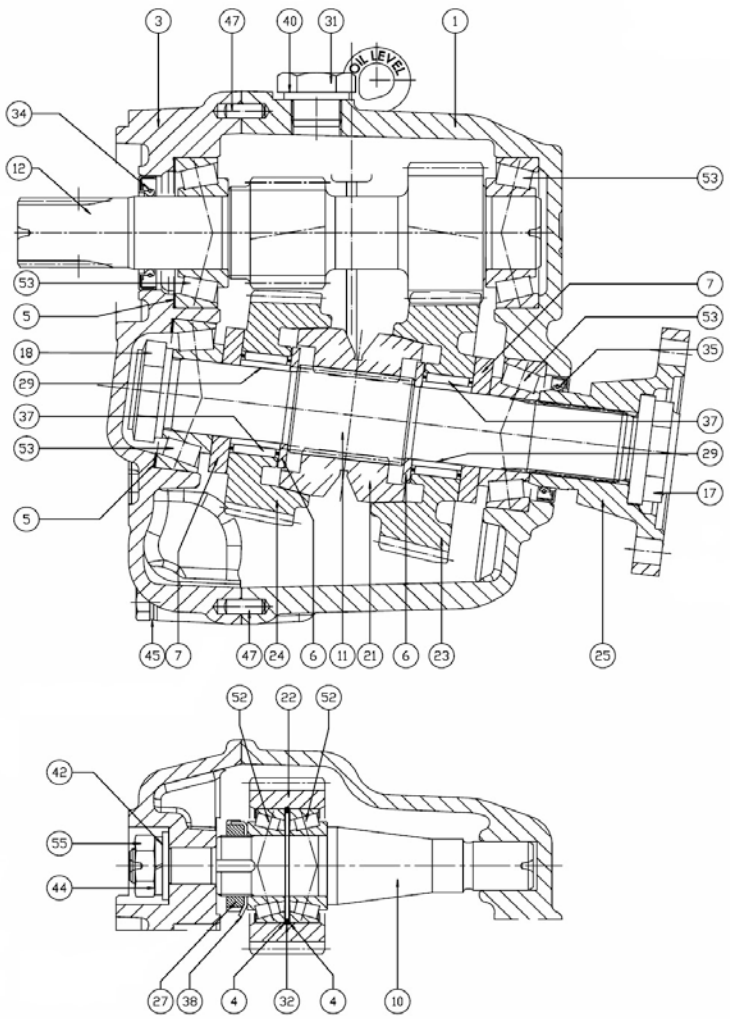

[NP] Not provided

Gearbox TMC-60A

	D_5034_2		Sheet 2/2		
FIG.	**REF.**	**QTY**	**DESCR.**	**FROM**	**UPTO**
2	24880401	1	Cover		
8	24860411	1	Spring		
9	24880402	1	Shaft		
13	24850005	1	Plate, IDENTIFICATION		
14	24860006	1	ATF Oil Plate		
15	24860419	1	Pin		
16	24810424	1	Lever		
19	24810065	1	Plug		
20	24880423	1	Pad		
26	24860008P	1	Gauge		
28	24880409	1	Screw		
30	24850011	1	Plug,oil drain		
33	24860404	1	Oil Seal		
36	24860417	1	O-Ring		
39	24810063	2	Plane Washer		
41	51030008	2	Washer DIN 125-8		
43	53033008	2	Washer GROWER DIN 127-8		
46	53052210	1	Pin DIN 1481 3-20		
48	52102258	7	Bolt DIN 933 M8-25 8.8		
49	52103258	2	Bolt DIN 912 M8-25 8.8		
50	52101263	2	Bolt DIN 931 M8-50 8.8		
51	24860071	2	STUD		
54	52120008	2	Nut DIN 934 M8 8.8		
56	51123008	1	Nut DIN 985 M8 5.6		

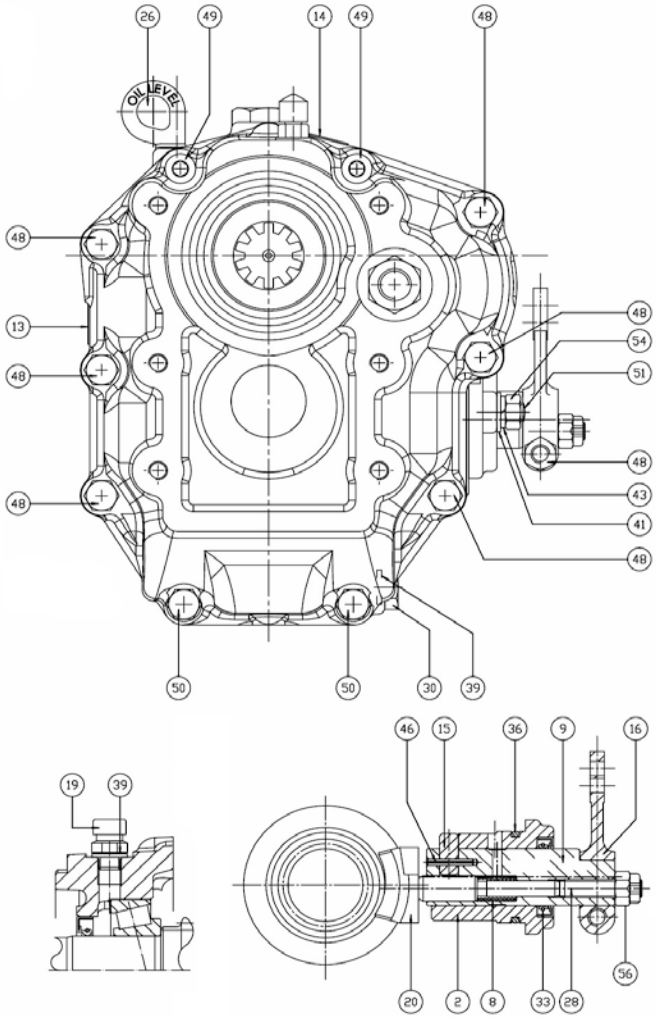

Gearbox TMC-60A

	D_5035_3		Kit de Service		
FIG.	**REF.**	**QTY**	**DESCR.**	**FROM**	**UPTO**
1	24883401	1	Gasket Kit		
2	A0201000	2	ATF Sole Diesel Oil 1L		

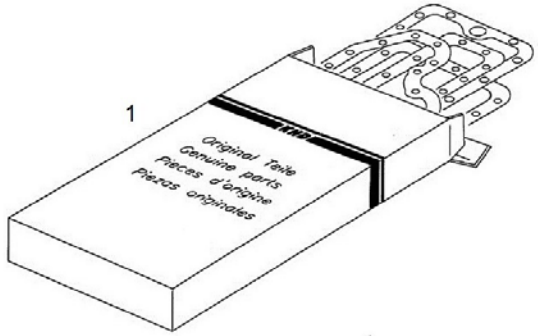

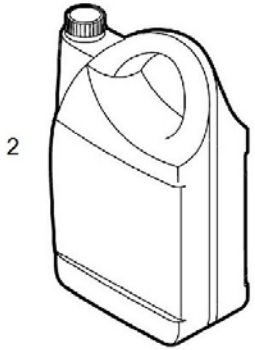

Elements Supports

	13810067		Motor Bracket, Width 180		
FIG.	**REF.**	**QTY**	**DESCR.**	**FROM**	**UPTO**
1	13810067.1	1	Bracket, Front Left (Width 180)		
2	13810067.2	1	Bracket, Front Right (Width 180)		
3	13810063.3	2	Bracket, Rear (Width 180)		

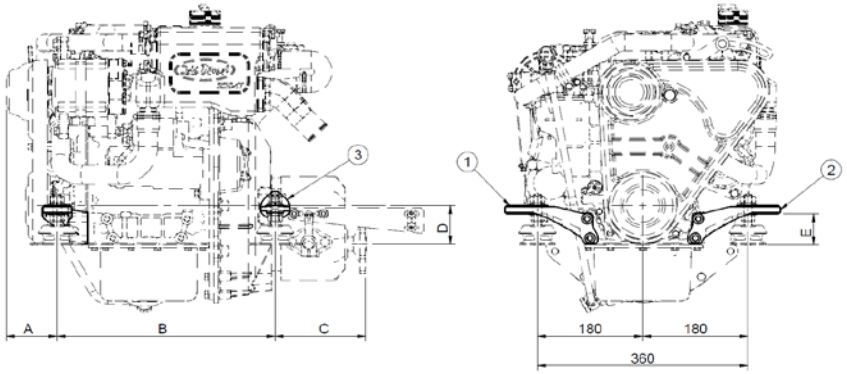

	13810068		Motor Bracket, Width 185		
FIG.	**REF.**	**QTY**	**DESCR.**	**FROM**	**UPTO**
1	13810068.1	1	Bracket, Front Left (Width 185-187)		
2	13810068.2	1	Bracket, Front Right (Width 185-187)		
3	13810037E	2	Support Rear		

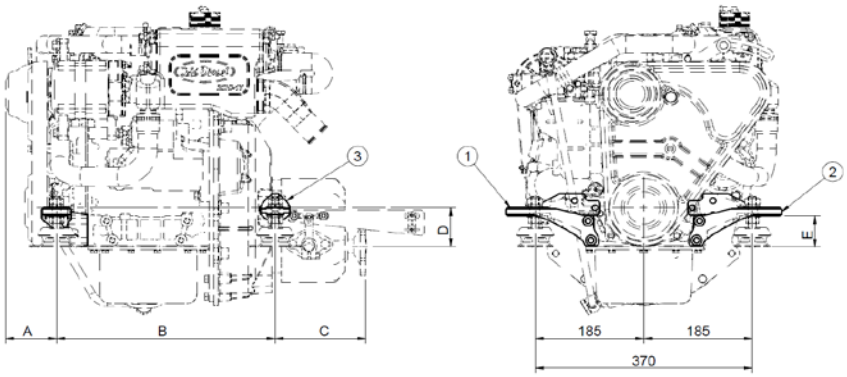

	13810069		Motor Bracket, Width 205		
FIG.	**REF.**	**QTY**	**DESCR.**	**FROM**	**UPTO**
1	13810069.1	1	Bracket, Front Left (Width 205)		
2	13810069.2	1	Bracket, Front Right (Width 205)		
3	13810069.3	2	Bracket, Rear (Width 205)		

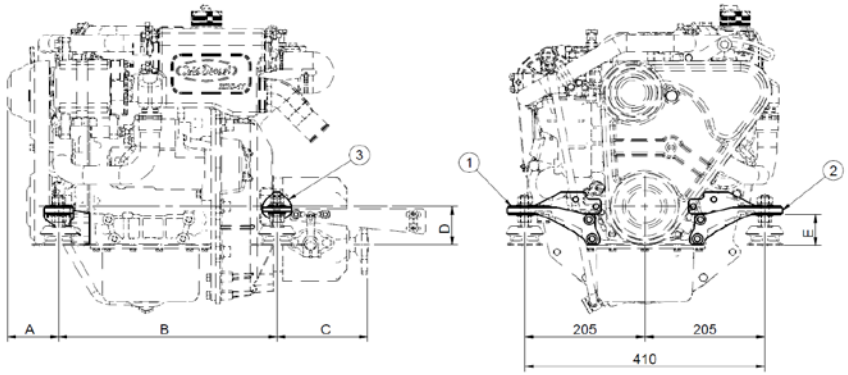

Motor Bracket

	13810048		Kit Replace MINI-17/29 v6 Supports to v5		
FIG.	REF.	QTY	DESCR.	FROM	UPTO
1	13810001.1	1	Bracket Front, Left	08/07/2014	
3	52203308	4	Bolt DIN 912 M10-1,25-25 12.9		
4	13810002.1	1	RIGHT, front bracket	08/07/2014	

IMAGEN DISPONIBLE PRÓXIMAMENTE
IMAGE AVAILABLE COMING SOON

Kit Gearbox

17610100.6			Kit S-Drive VOLVO 130S		
FIG.	**REF.**	**QTY**	**DESCR.**	**FROM**	**UPTO**
1	13810046	1	Flexible Coupling Type A SAE 6,5		
2	53033008	10	Washer GROWER DIN 127-8		
3	52103256	6	Bolt DIN 912 M8-15 8.8		
4	17610014	1	Engine Adaptor		
5	51030010	6	Washer DIN 125-10		
6	52101311	6	Bolt DIN 931 M10-40 8.8		
7	53203357	4	Bolt DIN 912 M12-1,25-20 12.9		
8	53038012	4	Washer DIN 6798-A 12		
9	52102257	4	Bolt DIN 933 M8-20 8.8		
10	13814070	1	Electric Fuel Feed Pump 12V		
11	13814072	2	NIPPLE EYE		
12	57000361	2	Washer 10-14-1,5		
13	52102154	2	Bolt DIN 933 M6-10 8.8		
14	51030006	2	Washer DIN 125-6		
15	51086015	1	One Ear Clamp With Interior Ring		
16	13814017.5	1	Fuel Pump Hose		
NS	58088283	1	Pastic Cable Zip Tie [NS]		
NS	60900126	1	TERMINAL [NS]		

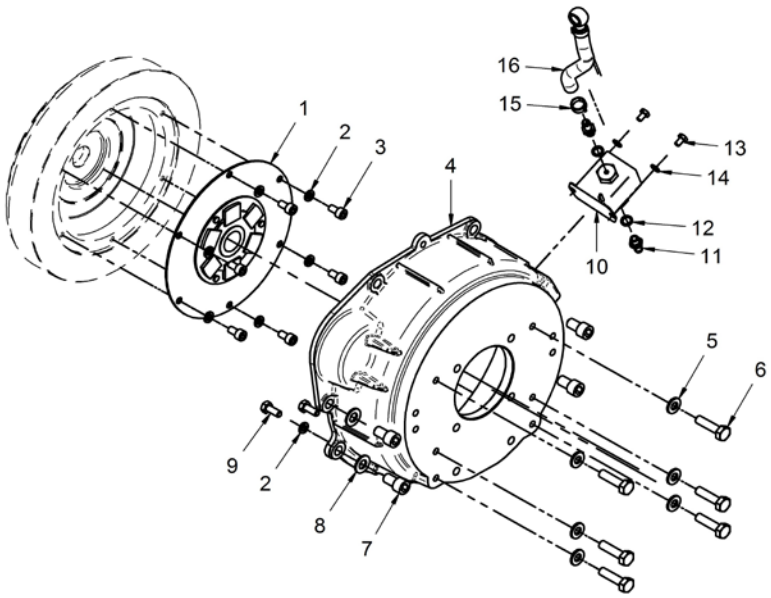

[NS] Not shown

Kit Gearbox

17610101.6			Kit S-Drive VOLVO 120S		
FIG.	**REF.**	**QTY**	**DESCR.**	**FROM**	**UPTO**
1	17610022	1	Flywheel Supplement		
2	53033008	10	Washer GROWER DIN 127-8		
3	52102257	10	Bolt DIN 933 M8-20 8.8		
4	13810042	1	Flexible Coupling Type F D. 175 VULKAN		
5	53033006	6	Washer GROWER DIN 127-6		
6	52102156	6	Bolt DIN 933 M6-16 8.8		
7	52101316	6	Bolt DIN 931 M10-65 8.8		
8	53038010	12	Washer DIN 6798-A 10		
9	17610014	1	Engine Adaptor		
10	13910016.1	1	Spacer, VOLVO Stern Drive 110S		
11	52120010	6	Nut DIN 934 M10 8.8		
12	53203357	4	Bolt DIN 912 M12-1,25-20 12.9		
13	53038012	4	Washer DIN 6798-A 12		
14	13814070	1	Electric Fuel Feed Pump 12V		
15	13814072	2	NIPPLE EYE		
16	57000361	2	Washer 10-14-1,5		
17	51030006	2	Washer DIN 125-6		
18	52102154	2	Bolt DIN 933 M6-10 8.8		
19	51086015	1	One Ear Clamp With Interior Ring		
20	13814017.5	1	Fuel Pump Hose		
21	17622027.4.2	1	Flywheel		
NS	58088283	1	Pastic Cable Zip Tie [NS]		
NS	60900126	1	TERMINAL [NS]		

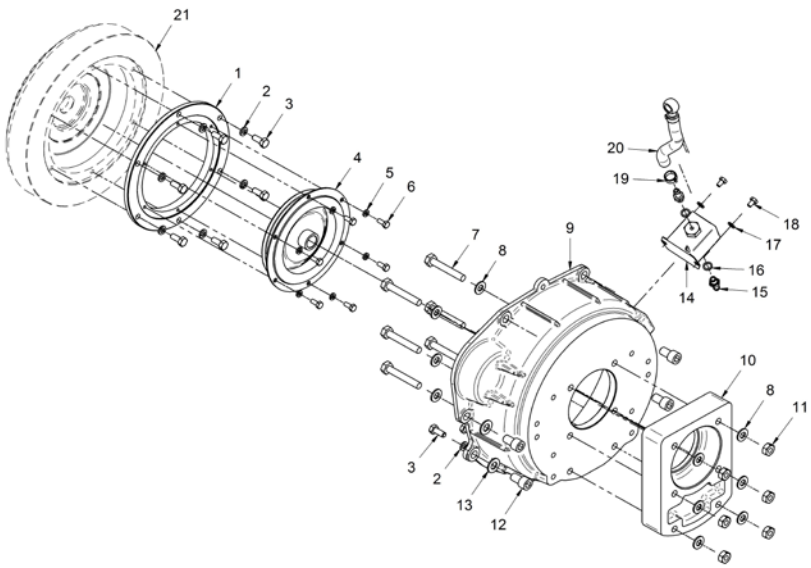

[NS] Not shown

Kit Gearbox

17610102.6			Kit S-Drive VOLVO 100S		
FIG.	**REF.**	**QTY**	**DESCR.**	**FROM**	**UPTO**
1	17610024	1	Shaft (Cardan 100S)		
2	53033008	10	Washer GROWER DIN 127-8		
3	52102258	6	Bolt DIN 933 M8-25 8.8		
4	17610015	1	Engine Adaptor		
5	13810037.1	2	Support REAR		
6	53033010	4	Washer GROWER DIN 127-10		
7	52103309	4	Bolt DIN 912 M10-30 8.8		
8	53203357	4	Bolt DIN 912 M12-1,25-20 12.9		
9	53038012	4	Washer DIN 6798-A 12		
10	52102257	4	Bolt DIN 933 M8-20 8.8		
11	13814070	1	Electric Fuel Feed Pump 12V		
12	13814072	2	NIPPLE EYE		
13	57000361	2	Washer 10-14-1,5		
14	51030006	2	Washer DIN 125-6		
15	52102154	2	Bolt DIN 933 M6-10 8.8		
16	51086015	1	One Ear Clamp With Interior Ring		
17	13814017.5	1	Fuel Pump Hose		
NS	58088283	1	Pastic Cable Zip Tie [NS]		
NS	60900126	1	TERMINAL [NS]		

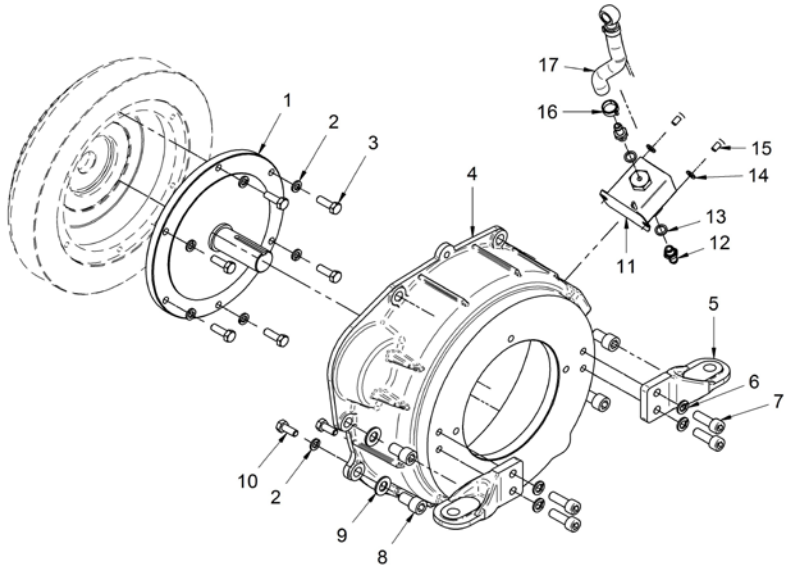

[NS] Not shown

Kit Gearbox

17610103.6			Kit S-Drive SD20 YANMAR		
FIG.	**REF.**	**QTY**	**DESCR.**	**FROM**	**UPTO**
1	17610023	1	Flywheel Supplement		
2	53033008	16	Washer GROWER DIN 127-8		
3	52102258	6	Bolt DIN 933 M8-25 8.8		
4	52102257	10	Bolt DIN 933 M8-20 8.8		
5	17610016	1	Engine Adaptor SAE7		
6	13810045	1	Adaptor SAE6 TO SAE7		
7	53038008	8	Washer DIN 6798-A 8		
8	52102259	8	Bolt DIN 933 M8-30 8.8		
9	52103308	6	Bolt DIN 912 M10-25 8.8		
10	53203357	4	Bolt DIN 912 M12-1,25-20 12.9		
11	53038012	4	Washer DIN 6798-A 12		
12	13814070	1	Electric Fuel Feed Pump 12V		
13	13814072	2	NIPPLE EYE		
14	57000361	2	Washer 10-14-1,5		
15	51030006	2	Washer DIN 125-6		
16	52102154	2	Bolt DIN 933 M6-10 8.8		
17	51086015	1	One Ear Clamp With Interior Ring		
18	13814017.5	1	Fuel Pump Hose		
NS	58088283	1	Pastic Cable Zip Tie [NS]		
NS	60900126	1	TERMINAL [NS]		

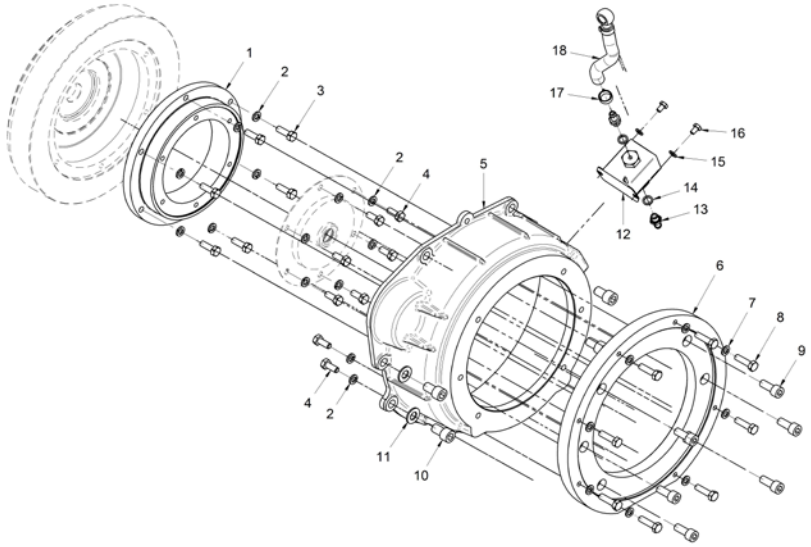

[NS] Not shown

Kit Gearbox

17610105.6			Kit GearBox VOLVO MS-2 & MS-2B		
FIG.	REF.	QTY	DESCR.	FROM	UPTO
1	17610022	1	Flywheel Supplement		
2	53033008	10	Washer GROWER DIN 127-8		
3	52102257	10	Bolt DIN 933 M8-20 8.8		
4	13810042	1	Flexible Coupling Type F D. 175 VULKAN		
5	53033006	6	Washer GROWER DIN 127-6		
6	52102156	6	Bolt DIN 933 M6-16 8.8		
7	52101317	6	Bolt DIN 931 M10-70 8.8		
8	53038010	6	Washer DIN 6798-A 10		
9	17610014	1	Engine Adaptor		
10	13810037.1	2	Support REAR		
11	53033010	4	Washer GROWER DIN 127-10		
12	52103309	4	Bolt DIN 912 M10-30 8.8		
13	53203357	4	Bolt DIN 912 M12-1,25-20 12.9		
14	53038012	4	Washer DIN 6798-A 12		
15	13910016.1	1	Spacer, VOLVO Stern Drive 110S		
16	13814070	1	Electric Fuel Feed Pump 12V		
17	13814072	2	NIPPLE EYE		
18	57000361	2	Washer 10-14-1,5		
19	51030006	2	Washer DIN 125-6		
20	52102154	2	Bolt DIN 933 M6-10 8.8		
21	51086015	1	One Ear Clamp With Interior Ring		
22	13814017.5	1	Fuel Pump Hose		
NS	58088283	1	Pastic Cable Zip Tie [NS]		
NS	60900126	1	TERMINAL [NS]		

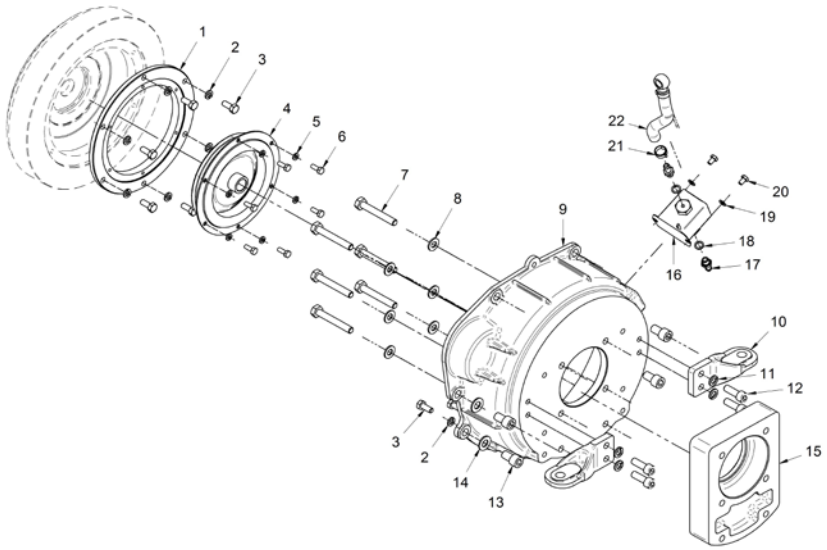

[NS] Not shown

Kit Gearbox

17610107.6			Kit GearBox TMC-40P		
FIG.	REF.	QTY	DESCR.	FROM	UPTO
1	13810046	1	Flexible Coupling Type A SAE 6,5		
2	53033008	12	Washer GROWER DIN 127-8		
3	52103256	6	Bolt DIN 912 M8-15 8.8		
4	52101258	6	Bolt DIN 931 M8-25 8.8		
5	53038008	6	Washer DIN 6798-A 8		
6	17610013	1	Engine adaptor		
7	13810037	2	Support REAR		
8	53033010	6	Washer GROWER DIN 127-10		
9	52103309	6	Bolt DIN 912 M10-30 8.8		
10	24810901	1	Bracket, GearBox Control		
11	51030005	2	Washer DIN 125-5		
12	24810913	1	Clamp,CABLE		
13	51030008	2	Washer DIN 125-8		
14	52120008	2	Nut DIN 934 M8 8.8		
15	14719115	1	Coupling,cable		
16	51030006	3	Washer DIN 125-6		
17	51051107	1	Pin DIN-94 1,6-16		
18	53203357	4	Bolt DIN 912 M12-1,25-20 12.9		
19	53038012	4	Washer DIN 6798-A 12		
20	52102257	4	Bolt DIN 933 M8-20 8.8		
21	13814070	1	Electric Fuel Feed Pump 12V		
22	13814072	2	NIPPLE EYE		
23	57000361	2	Washer 10-14-1,5		
24	52102154	2	Bolt DIN 933 M6-10 8.8		
25	51086015	1	One Ear Clamp With Interior Ring		
26	13814017.5	1	Fuel Pump Hose		
NS	58088283	1	Pastic Cable Zip Tie [NS]		
NS	60900126	1	TERMINAL [NS]		

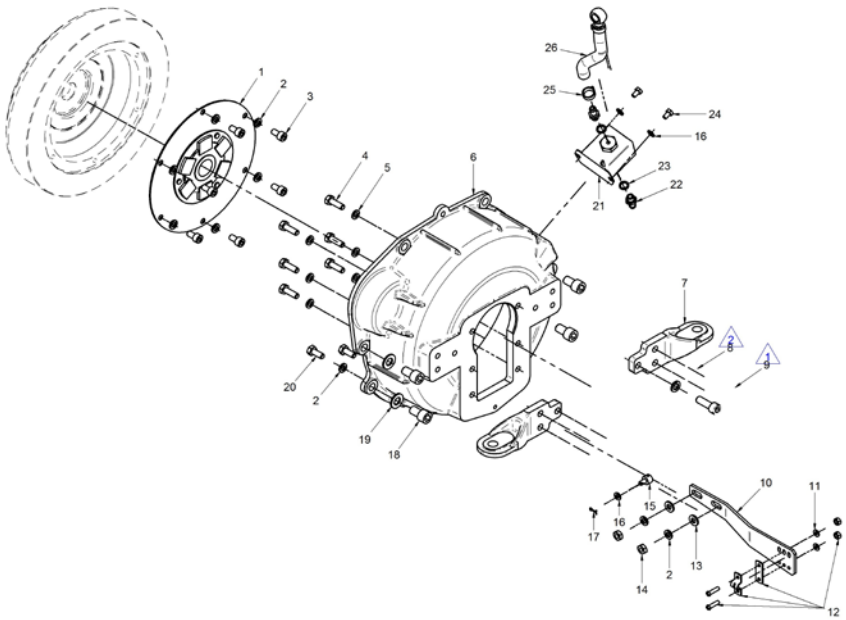

[NS] Not shown

Kit Gearbox

	17610110.4		Kit GearBox RONIM-5		
FIG.	**REF.**	**QTY**	**DESCR.**	**FROM**	**UPTO**
1	17622027.4.1	1	Flywheel		
2	13810046	1	Flexible Coupling Type A SAE 6,5		
3	53033008	12	Washer GROWER DIN 127-8		
4	52103256	6	Bolt DIN 912 M8-15 8.8		
5	53038012	5	Washer DIN 6798-A 12		
6	53203357	5	Bolt DIN 912 M12-1,25-20 12.9		
7	52103257	2	Bolt DIN 912 M8-20 8.8		
8	13114004	1	Cover		
9	13114002	1	Gasket		
10	13810037	2	Support REAR		
11	53033010	6	Washer GROWER DIN 127-10		
12	52102309	6	Bolt DIN 933 M10-30 8.8		
13	52102257	4	Bolt DIN 933 M8-20 8.8		

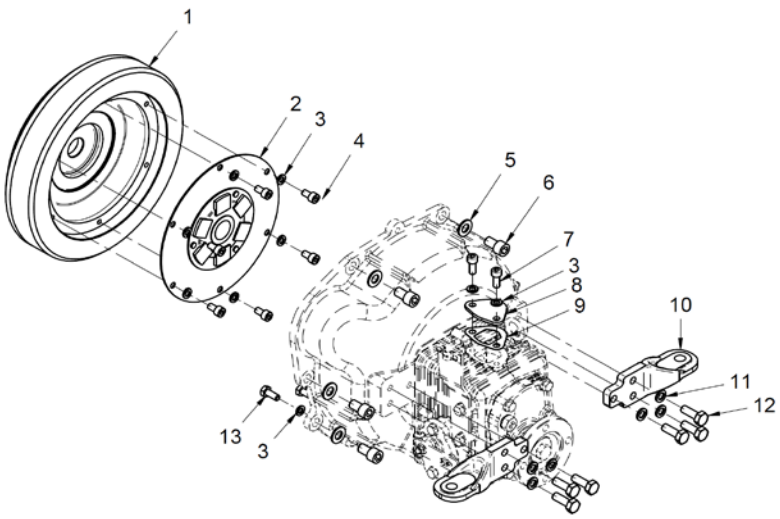

Kit Gearbox

17610111.6			Kit S-Drive VOLVO 110S		
FIG.	**REF.**	**QTY**	**DESCR.**	**FROM**	**UPTO**
1	17610021	1	Coupling, Drive		
2	17610019	1	Spacer, VOLVO Stern Drive 110S		
3	53033008	16	Washer GROWER DIN 127-8		
4	52102258	12	Bolt DIN 933 M8-25 8.8		
5	17610016	1	Engine Adaptor SAE7		
6	53038012	4	Washer DIN 6798-A 12		
7	53203357	4	Bolt DIN 912 M12-1,25-20 12.9		
8	13810016	1	Spacer,VOLVO Stern Drive ADAP.110S		
9	53033010	12	Washer GROWER DIN 127-10		
10	52103308	6	Bolt DIN 912 M10-25 8.8		
11	52101310	6	Bolt DIN 931 M10-35 8.8		
12	52102257	4	Bolt DIN 933 M8-20 8.8		
13	13814070	1	Electric Fuel Feed Pump 12V		
14	13814072	2	NIPPLE EYE		
15	57000361	2	Washer 10-14-1,5		
16	51030006	2	Washer DIN 125-6		
17	52102154	2	Bolt DIN 933 M6-10 8.8		
18	51086015	1	One Ear Clamp With Interior Ring		
19	13814017.5	1	Fuel Pump Hose		
NS	58088283	1	Pastic Cable Zip Tie [NS]		
NS	60900126	1	TERMINAL [NS]		

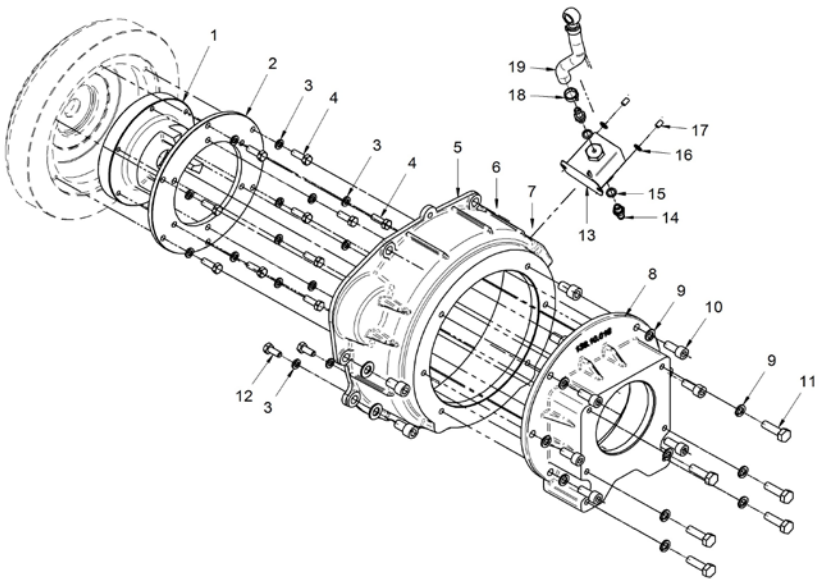

[NS] Not shown

Kit Gearbox

17610120.6			Kit S-Drive VOLVO 120SB/120SC/120SE		
FIG.	REF.	QTY	DESCR.	FROM	UPTO
1	17610022	1	Flywheel Supplement		
2	53033008	10	Washer GROWER DIN 127-8		
3	52102257	10	Bolt DIN 933 M8-20 8.8		
4	13810042	1	Flexible Coupling Type F D. 175 VULKAN		
5	53033006	6	Washer GROWER DIN 127-6		
6	52102156	6	Bolt DIN 933 M6-16 8.8		
7	17610014	1	Engine Adaptor		
8	17610026	1	Spacer, SDRIVE 120BS		
9	51030010	6	Washer DIN 125-10		
10	52101318	6	Bolt DIN 931 M10-75 8.8		
11	53203357	4	Bolt DIN 912 M12-1,25-20 12.9		
12	53038012	4	Washer DIN 6798-A 12		
13	13814070	1	Electric Fuel Feed Pump 12V		
14	13814072	2	NIPPLE EYE		
15	57000361	2	Washer 10-14-1,5		
16	51030006	2	Washer DIN 125-6		
17	52102154	2	Bolt DIN 933 M6-10 8.8		
18	51086015	1	One Ear Clamp With Interior Ring		
19	13814017.5	1	Fuel Pump Hose		
NS	58088283	1	Pastic Cable Zip Tie [NS]		
NS	60900126	1	TERMINAL [NS]		

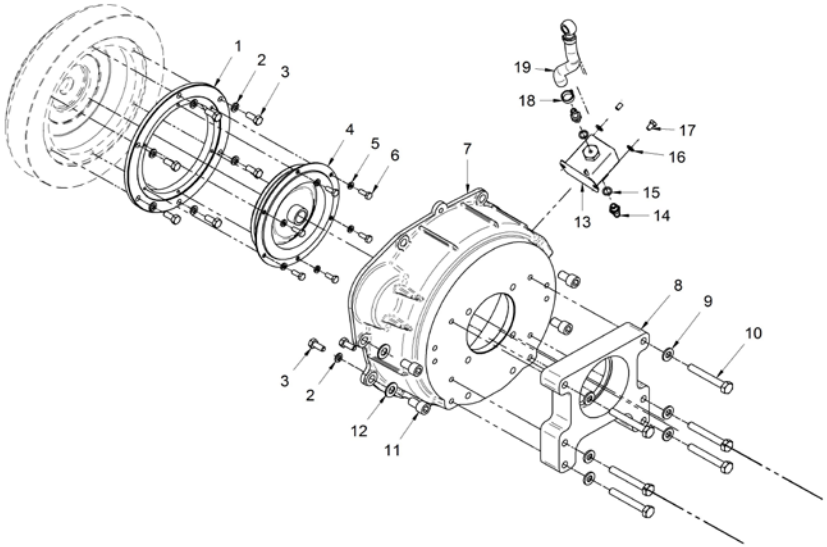

[NS] Not shown

Kit Gearbox

17610125.6			Kit S-Drive BUKH DV10 & DV20		
FIG.	REF.	QTY	DESCR.	FROM	UPTO
1	17610025	1	Shaft		
2	53033008	10	Washer GROWER DIN 127-8		
3	52102258	6	Bolt DIN 933 M8-25 8.8		
4	17310027	1	KEY		
5	13910027	1	Washer		
6	52102308	7	Bolt DIN 933 M10-25 8.8		
7	17610016	1	Engine Adaptor SAE7		
8	13910026	1	BUKH S-Drive DV-20 Adaptor Flange		
9	53033010	6	Washer GROWER DIN 127-10		
10	12110018	1	Stud		
11	53038008	1	Washer DIN 6798-A 8		
12	52120008	1	Nut DIN 934 M8 8.8		
13	16511007	6	Stud		
14	53038010	6	Washer DIN 6798-A 10		
15	52120010	6	Nut DIN 934 M10 8.8		
16	53203357	4	Bolt DIN 912 M12-1,25-20 12.9		
17	53038012	4	Washer DIN 6798-A 12		
18	52102257	4	Bolt DIN 933 M8-20 8.8		
19	13814070	1	Electric Fuel Feed Pump 12V		
20	13814072	2	NIPPLE EYE		
21	57000361	2	Washer 10-14-1,5		
22	51030006	2	Washer DIN 125-6		
23	52102154	2	Bolt DIN 933 M6-10 8.8		
24	51086015	1	One Ear Clamp With Interior Ring		
25	13814017.5	1	Fuel Pump Hose		
NS	58088283	1	Pastic Cable Zip Tie [NS]		
NS	60900126	1	TERMINAL [NS]		

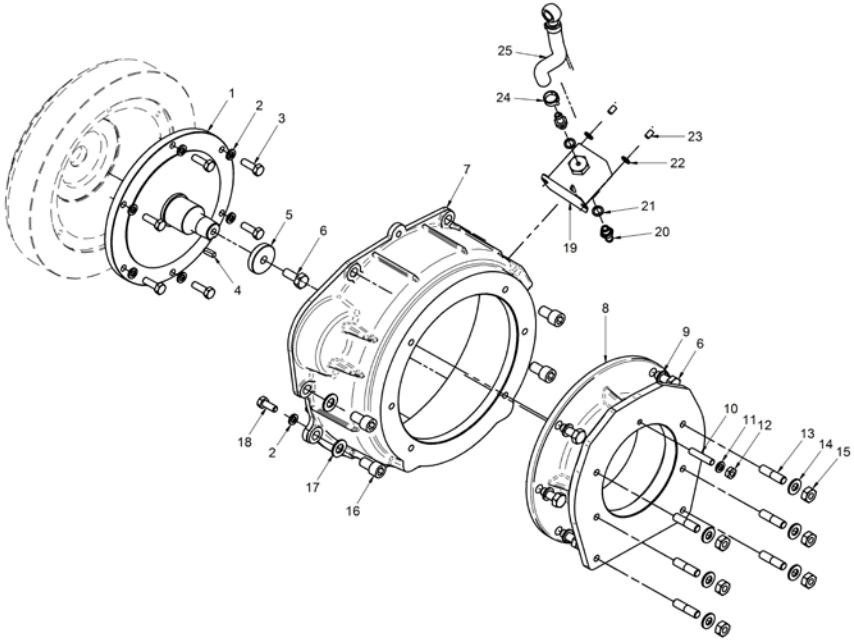

[NS] Not shown

Kit Gearbox

17610200.6			Kit GearBox TM-345/345A		
FIG.	**REF.**	**QTY**	**DESCR.**	**FROM**	**UPTO**
1	17210071	1	Flexible Coupling Type B SAE 6"1/2		
2	53033008	18	Washer GROWER DIN 127-8		
3	52102257	14	Bolt DIN 933 M8-20 8.8		
4	17610016	1	Engine Adaptor SAE7		
5	13910018.1	1	Adaptor SAE 7		
6	24810913	1	Clamp,CABLE		
7	51030005	2	Washer DIN 125-5		
8	18619020	1	Bracket,Gear box control		
9	51030008	6	Washer DIN 125-8		
10	52102256	2	Bolt DIN 933 M8-15 8.8		
11	51051107	1	Pin DIN-94 1,6-16		
12	51030006	6	Washer DIN 125-6		
13	ALLPA.93	1	Coupling,cable	23/05/2017	
13	14719115	1	Coupling,cable		23/05/2017
14	53203357	4	Bolt DIN 912 M12-1,25-20 12.9		
15	53038012	4	Washer DIN 6798-A 12		
16	13814070	1	Electric Fuel Feed Pump 12V		
17	13814072	2	NIPPLE EYE		
18	57000361	2	Washer 10-14-1,5		
19	52102154	2	Bolt DIN 933 M6-10 8.8		
20	51086015	1	One Ear Clamp With Interior Ring		
21	13814017.5	1	Fuel Pump Hose		
22	17211031	2	Elbow		
23	54081020	2	Clamp DIN 3017 20-32/9 W4		
24	15212007	2	Water Cooler Cover		
25	54082050	2	Clamp DIN 3017 50-70/12 W4		
26	59072604.1	2	Clamp		
27	14712015	2	Bolt,Coupling pipe oil		
28	57000375	4	Washer 17-22-1,5		
29	14712051	1	Cooler,oil		
30	18512024	1	Pipe		
31	17012024	1	Pipe		
32	13912041	1	Bracket,TM Oil Cooler		
33	52120008	6	Nut DIN 934 M8 8.8		
34	51031008	2	Washer DIN 9021 8		

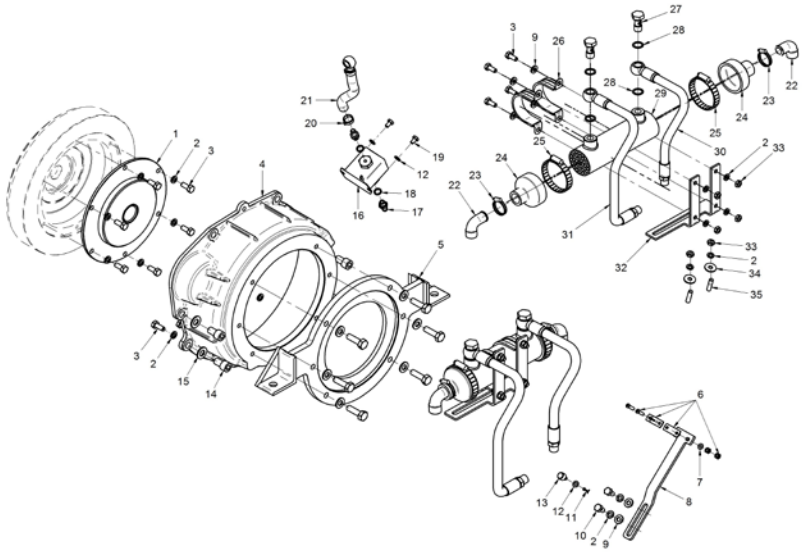

[NS] Not shown

Kit Gearbox

17610200.6			Kit GearBox TM-345/345A		
FIG.	REF.	QTY	DESCR.	FROM	UPTO
35	12120018	2	Stud		
NS	M87501927	1	Water Intake Hose (HQ) D. 19-27 [NS]		
NS	58088283	1	Pastic Cable Zip Tie [NS]		
NS	60900126	1	TERMINAL [NS]		

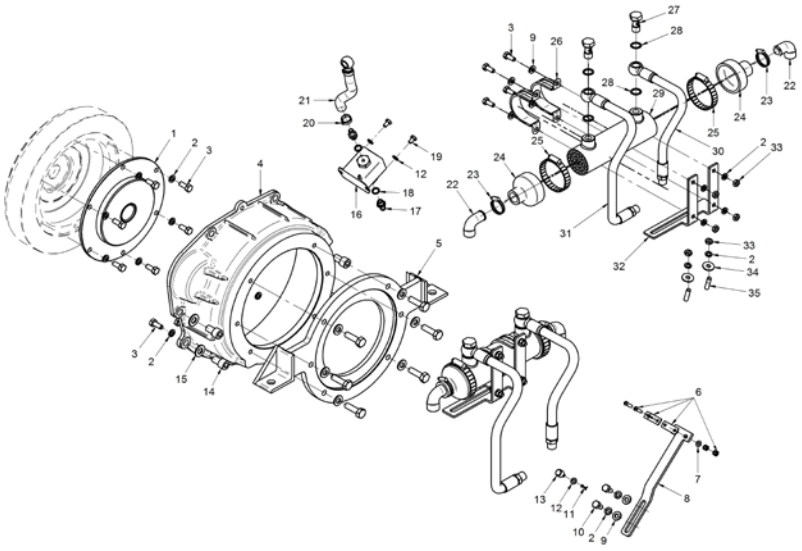

Kit Gearbox

17610230.6			Kit GearBox ZF 15 MIV		
FIG.	**REF.**	**QTY**	**DESCR.**	**FROM**	**UPTO**
1	13810046	1	Flexible Coupling Type A SAE 6,5		
2	53033008	12	Washer GROWER DIN 127-8		
3	52103256	6	Bolt DIN 912 M8-15 8.8		
4	52102308	6	Bolt DIN 933 M10-25 8.8		
5	53038010	6	Washer DIN 6798-A 10		
6	17610017	1	Engine Adaptor		
7	13810037.3	1	Rear, Bracket		
8	53033010	4	Washer GROWER DIN 127-10		
9	52102309	4	Bolt DIN 933 M10-30 8.8		
10	52105307	2	Bolt DIN 7991 M10-20 10.9		
11	51030008	2	Washer DIN 125-8		
12	52120008	2	Nut DIN 934 M8 8.8		
13	ALLPA.93	1	Coupling,cable	23/05/2017	
13	14719115	1	Coupling,cable		23/05/2017
14	51030006	5	Washer DIN 125-6		
15	51051107	1	Pin DIN-94 1,6-16		
16	51030005	2	Washer DIN 125-5		
17	24810913	1	Clamp,CABLE		
18	24610901	1	Bracket, GearBox Control		
19	53203357	4	Bolt DIN 912 M12-1,25-20 12.9		
20	53038012	4	Washer DIN 6798-A 12		
21	13810037.2	1	Rear, Bracket		
22	52102257	4	Bolt DIN 933 M8-20 8.8		
23	13814070	1	Electric Fuel Feed Pump 12V		
24	13814072	2	NIPPLE EYE		
25	57000361	2	Washer 10-14-1,5		
26	52102154	2	Bolt DIN 933 M6-10 8.8		
27	13814017.5	1	Fuel Pump Hose		
28	51086015	1	One Ear Clamp With Interior Ring		
NS	58088283	1	Pastic Cable Zip Tie [NS]		
NS	60900126	1	TERMINAL [NS]		

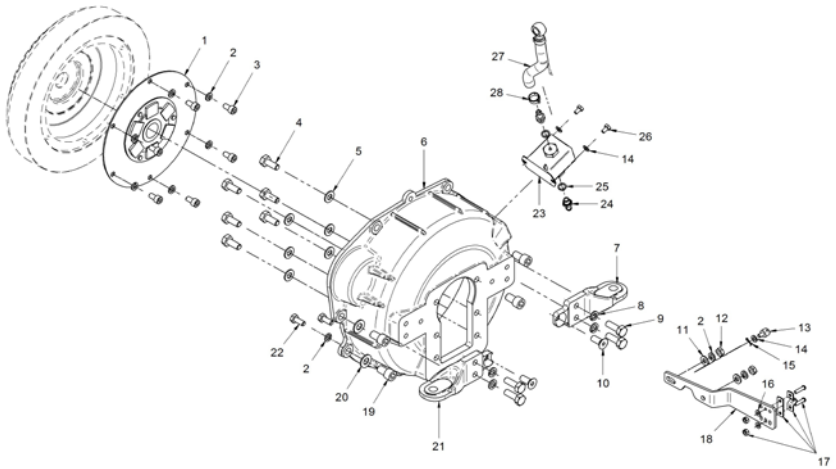

[NS] Not shown

Kit Gearbox

17610241.6			Kit GearBox TMC-60		
FIG.	**REF.**	**QTY**	**DESCR.**	**FROM**	**UPTO**
1	13810046	1	Flexible Coupling Type A SAE 6,5		
2	53033008	12	Washer GROWER DIN 127-8		
3	52103256	6	Bolt DIN 912 M8-15 8.8		
4	52101259	6	Bolt DIN 931 M8-30 8.8		
5	53038008	6	Washer DIN 6798-A 8		
6	17610013	1	Engine adaptor		
7	13810037.1	2	Support REAR		
8	53033010	4	Washer GROWER DIN 127-10		
9	52103309	4	Bolt DIN 912 M10-30 8.8		
10	24880901	1	Bracket, GearBox Control		
11	51030005	2	Washer DIN 125-5		
12	24810913	1	Clamp,CABLE		
13	51030008	2	Washer DIN 125-8		
14	52102257	6	Bolt DIN 933 M8-20 8.8		
15	51051107	1	Pin DIN-94 1,6-16		
16	51030006	6	Washer DIN 125-6		
17	ALLPA.93	1	Coupling,cable	23/05/2017	
17	14719115	1	Coupling,cable		23/05/2017
18	53203357	4	Bolt DIN 912 M12-1,25-20 12.9		
19	53038012	4	Washer DIN 6798-A 12		
20	13814070	1	Electric Fuel Feed Pump 12V		
21	13814072	2	NIPPLE EYE		
22	57000361	2	Washer 10-14-1,5		
23	52102154	2	Bolt DIN 933 M6-10 8.8		
24	51086015	1	One Ear Clamp With Interior Ring		
25	13814017.5	1	Fuel Pump Hose		
NS	58088283	1	Pastic Cable Zip Tie [NS]		
NS	60900126	1	TERMINAL [NS]		

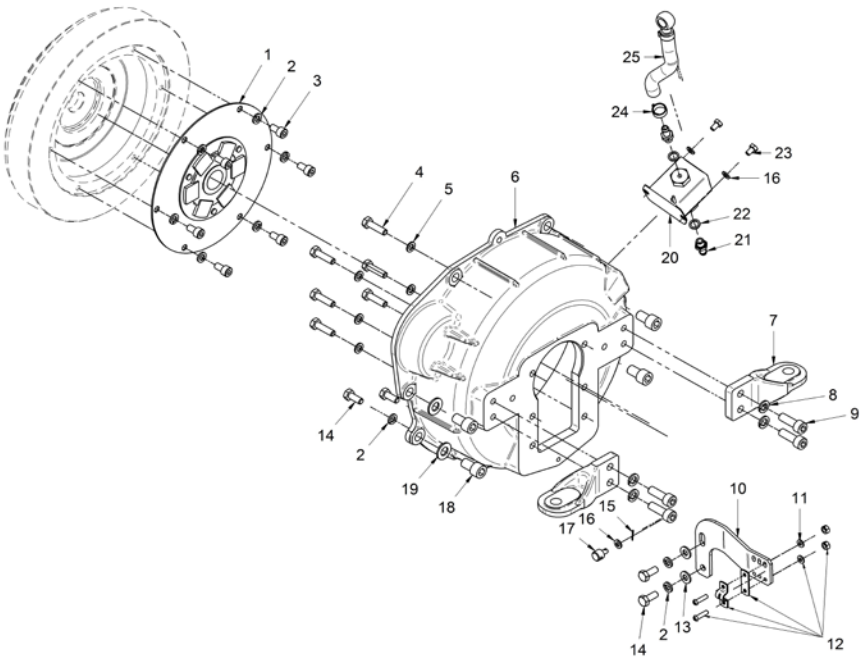

[NS] Not shown

Kit Gearbox

17632100.6			Kit S-Drive SELVA		
FIG.	**REF.**	**QTY**	**DESCR.**	**FROM**	**UPTO**
1	13810046	1	Flexible Coupling Type A SAE 6,5		
2	53033008	16	Washer GROWER DIN 127-8		
3	52103256	6	Bolt DIN 912 M8-15 8.8		
4	52101263	6	Bolt DIN 931 M8-50 8.8		
5	17610016	1	Engine Adaptor SAE7		
6	22510012	1	Adaptor Flange "BW"		
7	53038010	6	Washer DIN 6798-A 10		
8	52102309	6	Bolt DIN 933 M10-30 8.8		
9	53203357	4	Bolt DIN 912 M12-1,25-20 12.9		
10	53038012	4	Washer DIN 6798-A 12		
11	52120008	6	Nut DIN 934 M8 8.8		
12	52102257	4	Bolt DIN 933 M8-20 8.8		
13	13814070	1	Electric Fuel Feed Pump 12V		
14	13814072	2	NIPPLE EYE		
15	57000361	2	Washer 10-14-1,5		
16	51030006	2	Washer DIN 125-6		
17	52102154	2	Bolt DIN 933 M6-10 8.8		
18	51086015	1	One Ear Clamp With Interior Ring		
19	13814017.5	1	Fuel Pump Hose		
NS	58088283	1	Pastic Cable Zip Tie [NS]		
NS	60900126	1	TERMINAL [NS]		

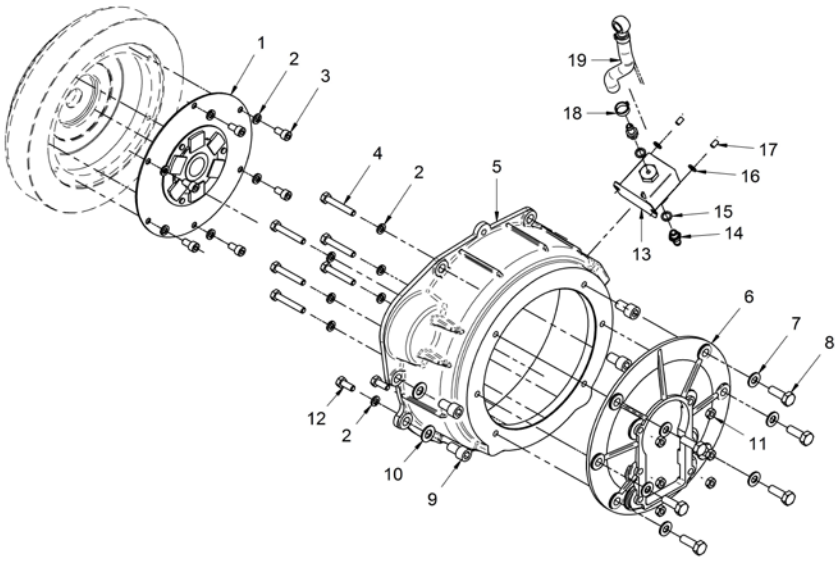

[NS] Not shown

Kit Gearbox

17632100A.6			Kit GearBox TMC/ZF/PRM		
FIG.	REF.	QTY	DESCR.	FROM	UPTO
1	13810046	1	Flexible Coupling Type A SAE 6,5		
2	53033008	10	Washer GROWER DIN 127-8		
3	52103256	6	Bolt DIN 912 M8-15 8.8		
4	52101258	6	Bolt DIN 931 M8-25 8.8		
5	53038008	6	Washer DIN 6798-A 8		
6	17610013	1	Engine adaptor		
7	13810037	2	Support REAR		
8	53033010	6	Washer GROWER DIN 127-10		
9	52103309	6	Bolt DIN 912 M10-30 8.8		
10	53203357	4	Bolt DIN 912 M12-1,25-20 12.9		
11	53038012	4	Washer DIN 6798-A 12		
12	52102257	4	Bolt DIN 933 M8-20 8.8		
13	13814070	1	Electric Fuel Feed Pump 12V		
14	13814072	2	NIPPLE EYE		
15	57000361	2	Washer 10-14-1,5		
16	51030006	2	Washer DIN 125-6		
17	52102154	2	Bolt DIN 933 M6-10 8.8		
18	51086015	1	One Ear Clamp With Interior Ring		
19	13814017.5	1	Fuel Pump Hose		
NS	58088283	1	Pastic Cable Zip Tie [NS]		
NS	60900126	1	TERMINAL [NS]		

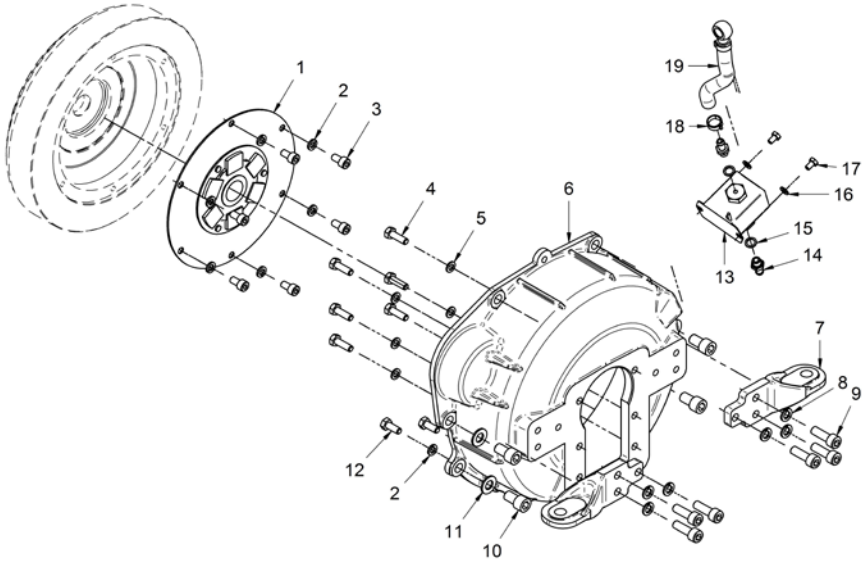

[NS] Not shown

Kit Gearbox

17632100T.6			Kit S-Drive TECHNO.SP60		
FIG.	**REF.**	**QTY**	**DESCR.**	**FROM**	**UPTO**
1	13810046	1	Flexible Coupling Type A SAE 6,5		
2	53033008	10	Washer GROWER DIN 127-8		
3	52103256	6	Bolt DIN 912 M8-15 8.8		
4	17610016	1	Engine Adaptor SAE7		
5	24813501	1	BW Bell Housing		
6	53038010	16	Washer DIN 6798-A 10		
7	52102309	14	Bolt DIN 933 M10-30 8.8		
8	51051107	1	Pin DIN-94 1,6-16		
9	51030006	6	Washer DIN 125-6		
10	ALLPA.93	1	Coupling,cable	23/05/2017	
10	14719115	1	Coupling,cable		23/05/2017
11	51030005	2	Washer DIN 125-5		
12	24810913	1	Clamp,CABLE		
13	52101313	2	Bolt DIN 931 M10-50 8.8		
14	53038008	11	Washer DIN 6798-A 8		
15	52101263	8	Bolt DIN 931 M8-50 8.8		
16	40019030	3	Stud		
17	52120008	3	Nut DIN 934 M8 8.8		
18	53203357	4	Bolt DIN 912 M12-1,25-20 12.9		
19	53038012	4	Washer DIN 6798-A 12		
20	52102257	4	Bolt DIN 933 M8-20 8.8		
21	13814070	1	Electric Fuel Feed Pump 12V		
22	13814072	2	NIPPLE EYE		
23	57000361	2	Washer 10-14-1,5		
24	52102154	2	Bolt DIN 933 M6-10 8.8		
25	51086015	1	One Ear Clamp With Interior Ring		
26	13814017.5	1	Fuel Pump Hose		
27	13810001.1	1	Bracket Front, Left		
28	13810002.1	1	RIGHT, front bracket		
30	52203308	4	Bolt DIN 912 M10-1,25-25 12.9		
31	61631100	2	Anti Vibration Mount Type A 50SHA		
NS	M87501927	1	Water Intake Hose (HQ) D. 19-27 [NS]		
NS	13211035	1	Exhaust Manifold Outlet Bend [NS]		
NS	17211036	1	Raccord [NS]		
NS	54081020	2	Clamp DIN 3017 20-32/9 W4 [NS]		

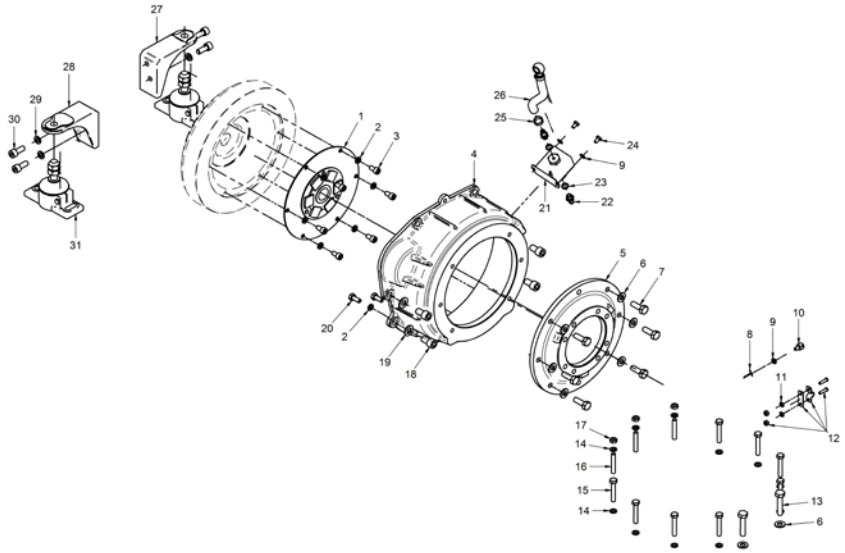

[NS] Not shown

Kit Gearbox

17632100T.6			Kit S-Drive TECHNO.SP60		
FIG.	**REF.**	**QTY**	**DESCR.**	**FROM**	**UPTO**
NS	58088283	3	Pastic Cable Zip Tie [NS]		
NS	60121005	1	Water Trainer 1/2" [NS]		
NS	60900126	1	TERMINAL [NS]		

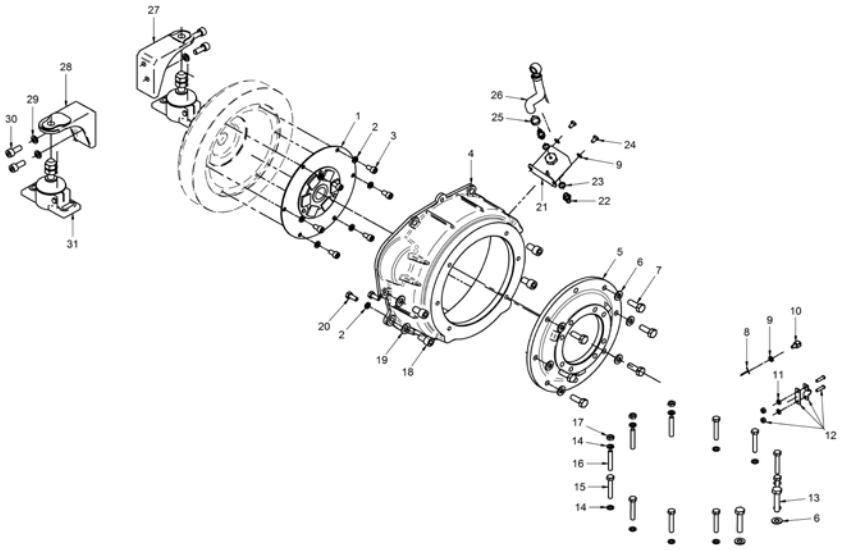

	17617101		Kit 2nd Alternator 14V/90A		
FIG.	REF.	QTY	DESCR.	FROM	UPTO
1	13110202	1	Pulley 2A (S)		
2	17617101.1	1	Alternator Bracket		
3	51030010	2	Washer DIN 125-10		
4	52101326	1	Bolt DIN 931 M10-130 8.8		
5	53033010	7	Washer GROWER DIN 127-10		
6	52120010	1	Nut DIN 934 M10 8.8		
7	51030008	1	Washer DIN 125-8		
8	51031008	1	Washer DIN 9021 8		
9	53033008	1	Washer GROWER DIN 127-8		
10	52120008	1	Nut DIN 934 M8 8.8		
11	52102259	1	Bolt DIN 933 M8-30 8.8		
12	52203315	4	Bolt DIN 912 M10-1,25-60 12.9		
13	17217019	1	Alternator 14V/90A		
14	17417020	1	Pulley Alternator		
15	17617101.2	1	Strap, Alternator		
16	51030006	4	Washer DIN 125-6		
17	52102159	2	Bolt DIN 933 M6-30 8.8		
18	53033006	2	Washer GROWER DIN 127-6		
19	52120006	2	Nut DIN 934 M6 8.8		
22	17617101.3	1	Alternator Bracket		
23	52102307	2	Bolt DIN 933 M10-20 8.8		
NS	17017103.2	1	Belt Type AX 23 [NS]		

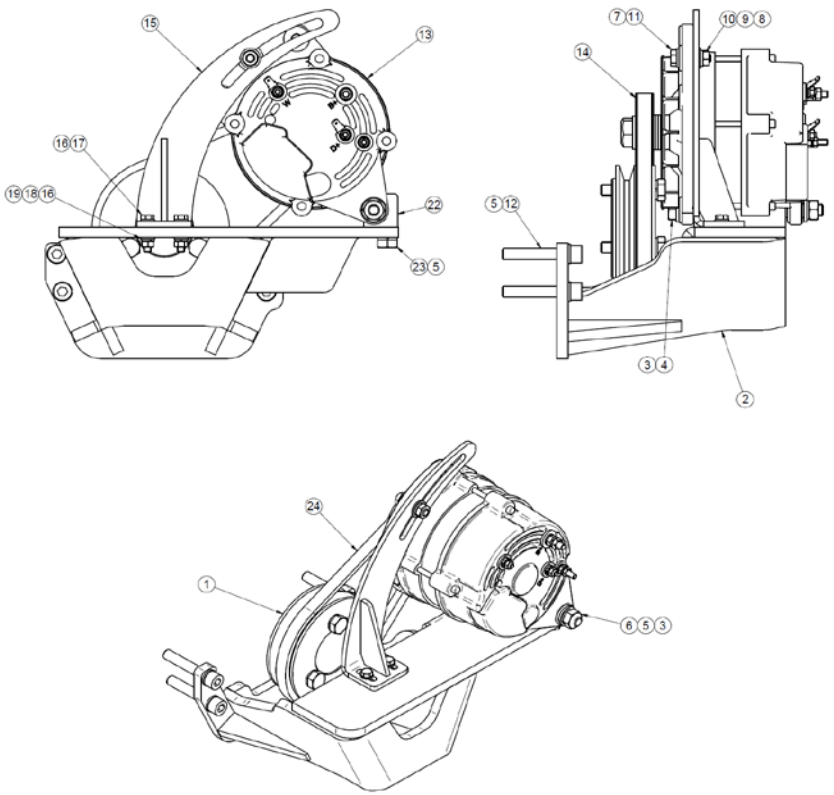

[NS] Not shown

17617201			Kit Wire Earth Isolated Alternator 14V/7		
FIG.	REF.	QTY	DESCR.	FROM	UPTO
1	19017113	1	Relay 12 V, Earth Isolated		
2	13817008	1	Support,relay		
3	51030006	3	Washer DIN 125-6		
4	52102155	4	Bolt DIN 933 M6-12 8.8		
5	60900978	1	Switch, Oil Press		
6	17117052	1	Oil Pressure Sensor Adaptor		
7	56000073	2	Copper Washer 16-23-1,5		
8	60900999	2	Connection M14X1,5 5/8" EXA.22 L=22		
9	60900982	1	Temperature SENDER		
10	56000069	1	Washer 14-20-1,5		
11	60900972	1	High Coolant, 2 Poles		
12	14419023	1	Ball JOINT		
13	52120006	1	Nut DIN 934 M6 8.8		
14	15119015	1	CABLE Holder Ball		
15	13819001	1	Clamp		
16	54102109	2	Bolt DIN 933 M5-25 INOX.		
17	52120005	2	Nut DIN 934 M5 8.8		
18	51030005	2	Washer DIN 125-5		
19	13817020B	1	Alt. 14V/75A		
20	52102260	1	Bolt DIN 933 M8-35 8.8		
21	52120008	2	Nut DIN 934 M8 8.8		
22	13017013	2	Bracket Bakelit Bushing		
23	17217012	2	Tensor Bakelite Bushing		
24	13817114	1	Spacer 8,5X25X19		
25	17417010	2	Bakelite Bushing		
26	17417014	2	Washer		
27	51031008	1	Washer DIN 9021 8		
28	53033008	2	Washer GROWER DIN 127-8		
29	17314017.4	1	Pipe, Filter TO INJ. Pump	22/09/2017	
30	51086015	1	One Ear Clamp With Interior Ring	22/09/2017	
NS	51030008	1	Washer DIN 125-8 [NS]	22/09/2017	
NS	52102256	1	Bolt DIN 933 M8-15 8.8 [NS]	22/09/2017	
NS	58088284	1	Pastic Cable Zip Tie [NS]		
NS	58088285	1	Pastic Cable Zip Tie [NS]		
NS	60900126	1	TERMINAL [NS]		

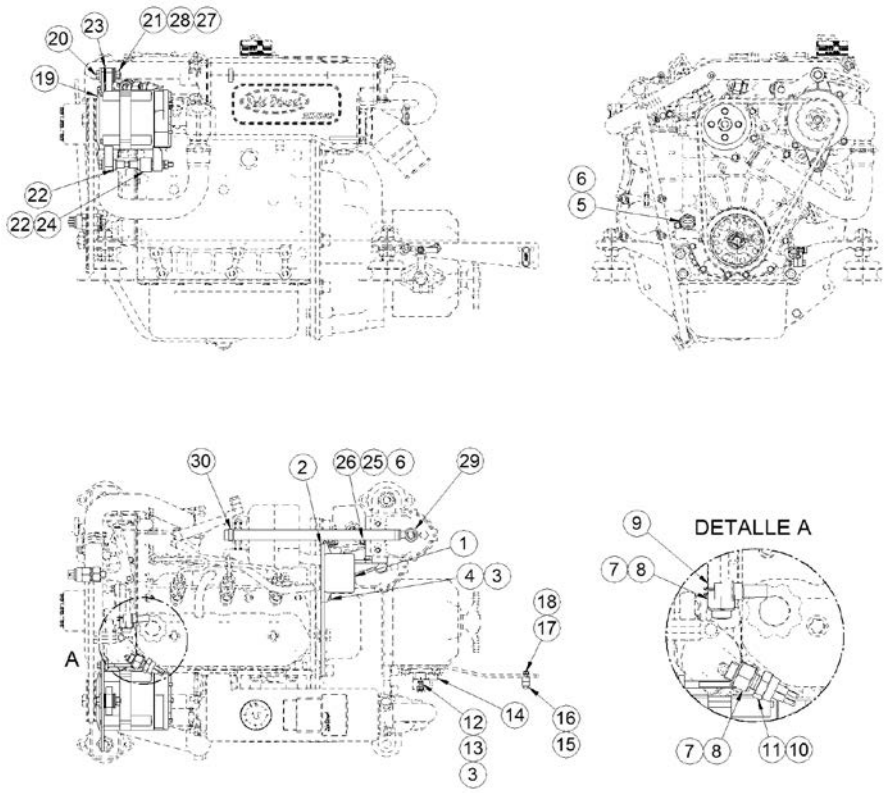

[NS] Not shown

17617201			Kit Wire Earth Isolated Alternator 14V/7		
FIG.	REF.	QTY	DESCR.	FROM	UPTO
NS	60938205	1	Wir. Electrical Isolated MINI-17/29 SVT [NS]		
NS	60939048	1	MASS BLACK TO Wiring START [NS]		

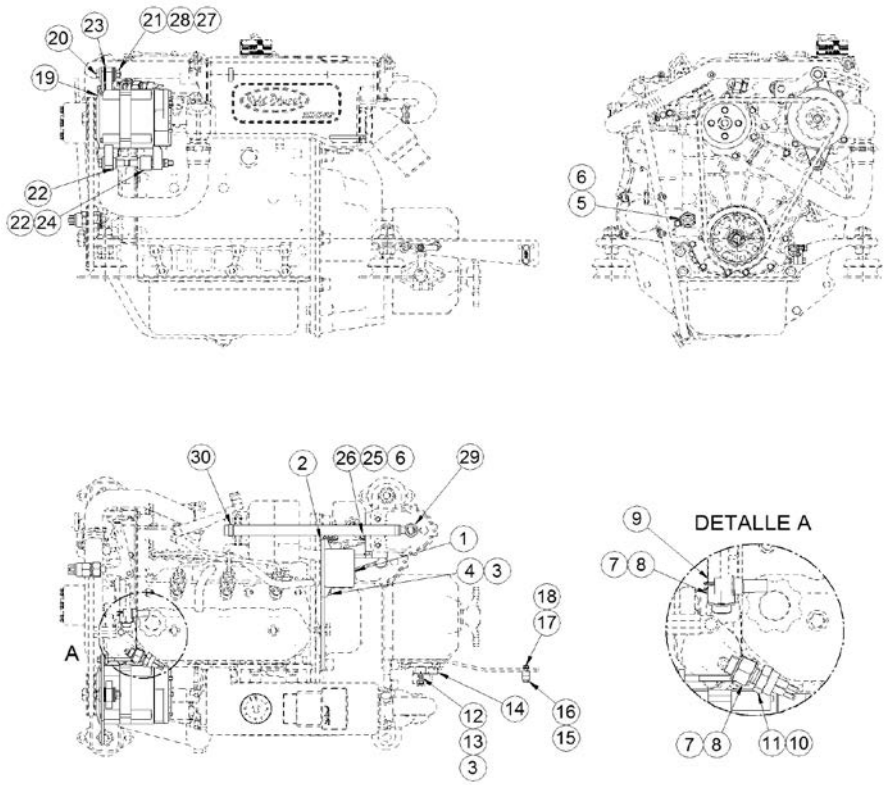

24813510			Kit Water Leak Sensor & Alarm SP60 12V		
FIG.	REF.	QTY	DESCR.	FROM	UPTO
1	60938203	1	SPROP60 Water SYStem Alarm SYSTEM		
2	24813504	1	Water Alarm Sensor		

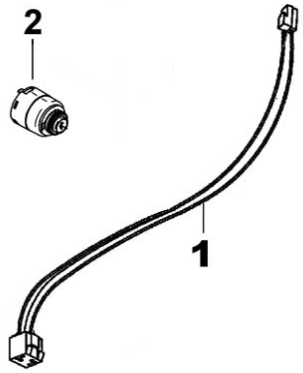

Other Kits

13810118S			Front Water Pomp MINI-17/29 Kit(Spline)		
FIG.	REF.	QTY	DESCR.	FROM	UPTO
1	13810118	1	Front Water Pump MINI-17/29 Kit Complete		

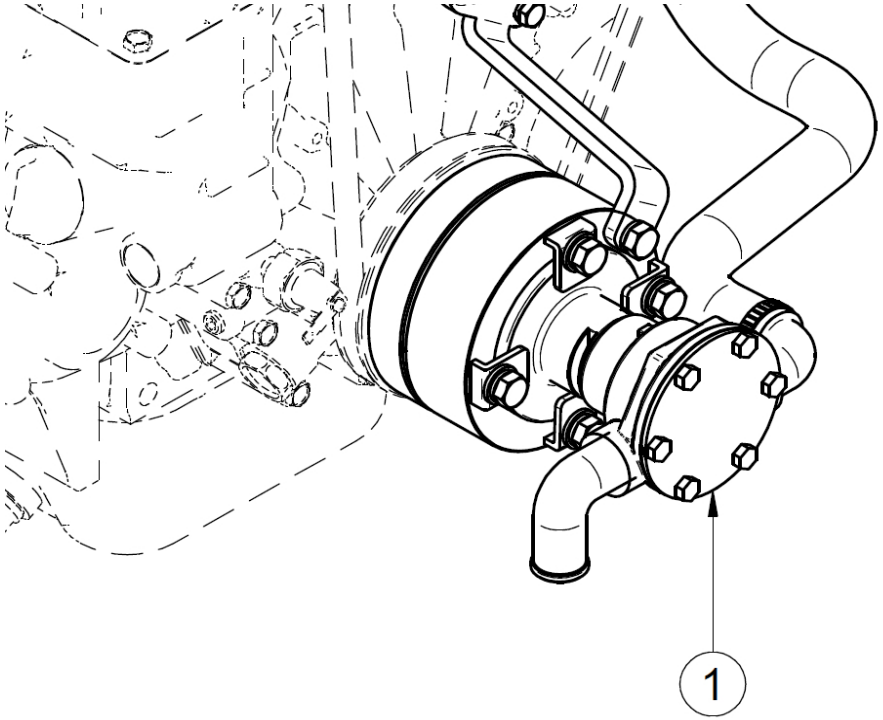

Other Kits

	13811158		Boiler Kit (S)		
FIG.	**REF.**	**QTY**	**DESCR.**	**FROM**	**UPTO**
1	13511050	1	NIPPLE,heater		
2	56000073	1	Copper Washer 16-23-1,5		
3	17124053	2	Joint		
4	13811044	1	Nipple,heater		
5	54081020	1	Clamp DIN 3017 20-32/9 W4		

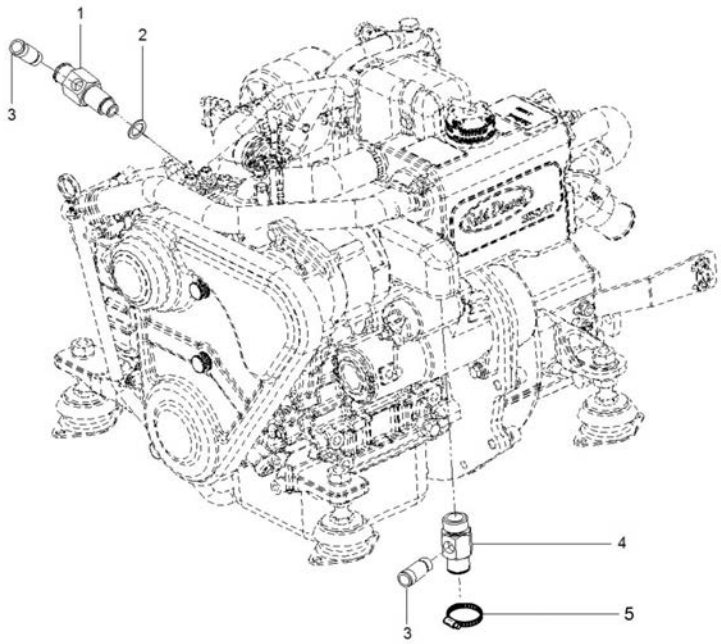

	13812010		Pressure Gauge Kit 10 BAR		
FIG.	REF.	QTY	DESCR.	FROM	UPTO
1	13812013.1	1	Pressure Tap		
2	13812011	1	Flexible Hose F-M G1/4-M16x2		
3	13812012	1	Pressure Gauge 0-10 bar		
4	13812014	1	Protective Rubber		

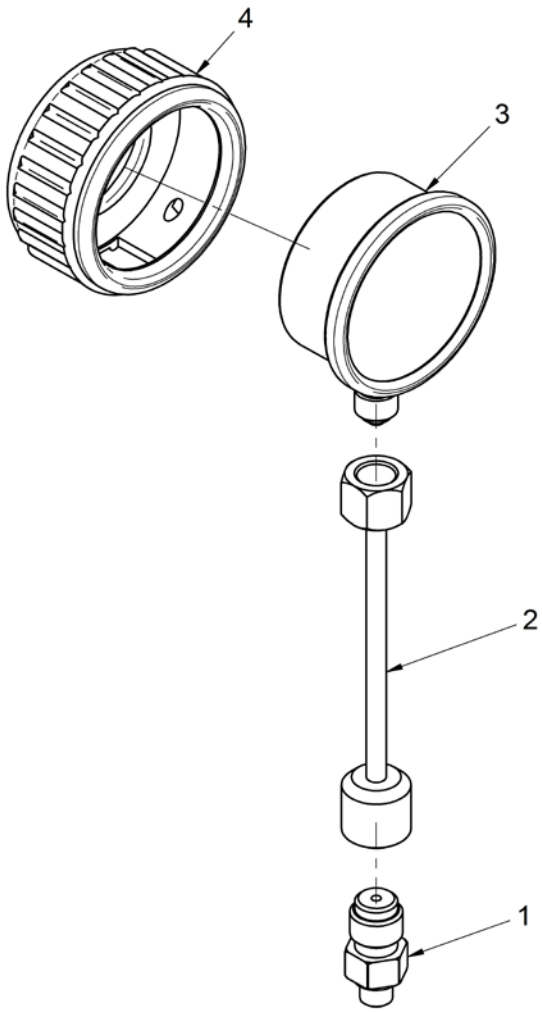

	17012345		Kit Trolling Valve for TM-345/A		
FIG.	REF.	QTY	DESCR.	FROM	UPTO
1	24850050	1	Trolling Valve TM-345A		
2	17012024	1	Pipe		
3	17512017	1	Pipe, rev.oil Cooler		
4	14712015	2	Bolt,Coupling pipe oil		
5	57000375	4	Washer 17-22-1,5		
6	24810913	1	Clamp,CABLE		
7	14719115	2	Coupling,cable		
8	51051107	2	Pin DIN-94 1,6-16		
9	51030006	1	Washer DIN 125-6		
10	51030005	2	Washer DIN 125-5		

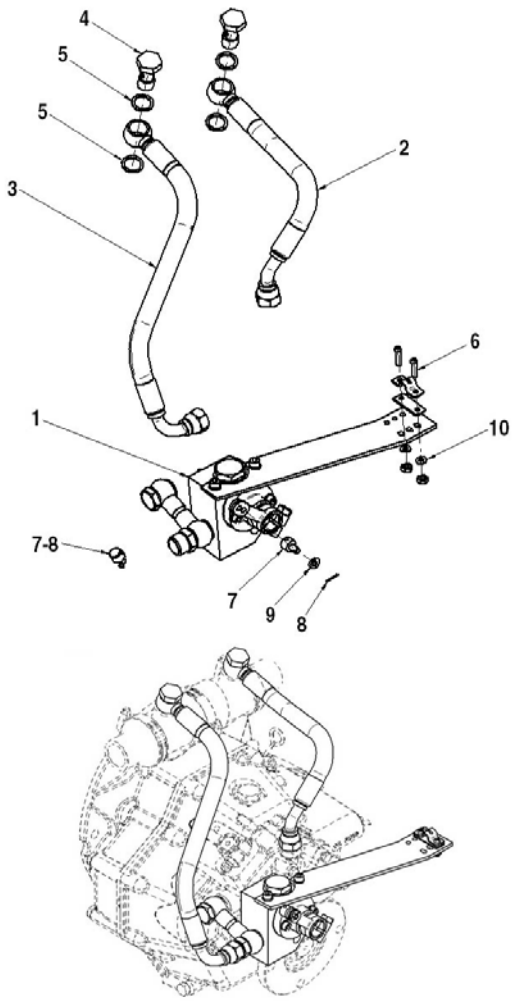

Other Kits

17610050.6			Kit Conversion MINI-1 to MINI-29 v6		
FIG.	**REF.**	**QTY**	**DESCR.**	**FROM**	**UPTO**
1	13810015.1	2	MINI 17/29 Engine Base Plate v6		
2	13810037E	2	Support Rear		
3	13810068.1	1	Bracket, Front Left (Width 185-187)		
4	13810068.2	1	Bracket, Front Right (Width 185-187)		
5	51030008	8	Washer DIN 125-8		
6	53033008	8	Washer GROWER DIN 127-8		
7	52102259	8	Bolt DIN 933 M8-30 8.8		

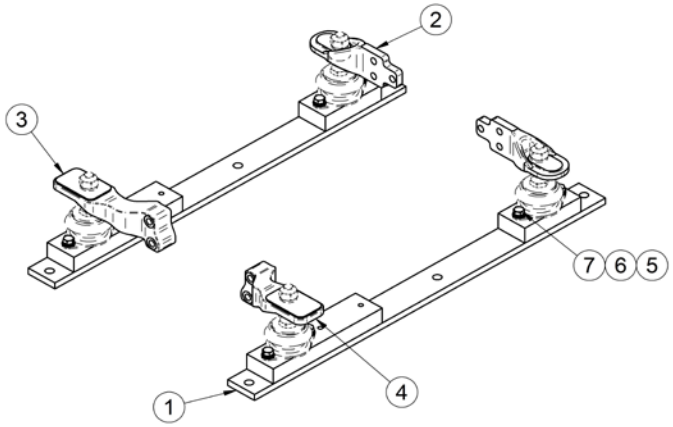

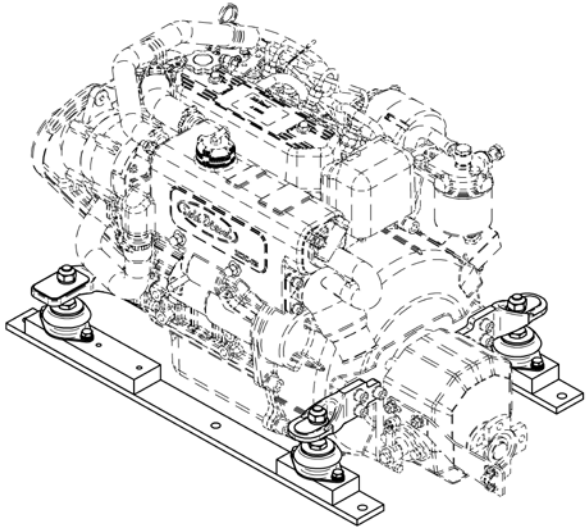

Other Kits

	17610212		Kit Cooler Assy TMC-60		
FIG.	REF.	QTY	DESCR.	FROM	UPTO
1	24880107	1	Kit Oil Cooler TMC-60 D.25		
2	54081016	2	Clamp DIN 3017 16-27/9 W4		
3	52102156	1	Bolt DIN 933 M6-16 8.8		
4	51030006	1	Washer DIN 125-6		
5	59071304	1	Clamp RSGU 1 30/15 W1		
6	13817011	1	Bracket		
7	51031006	1	Washer DIN 9021 6		
8	52120006	1	Nut DIN 934 M6 8.8		
9	17111012	2	Coupling		
10	60371055	2	Hose Connection 1" x 20		
NS	M87501927	1	Water Intake Hose (HQ) D. 19-27 [NS]		
NS	58088280	1	Pastic Cable Zip Tie [NS]		

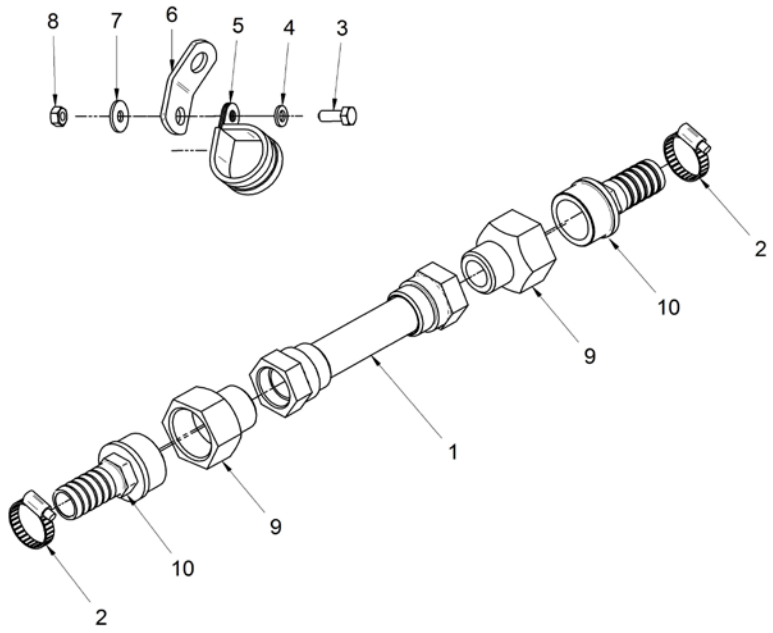

[NS] Not shown

Other Kits

	17710212		Kit Cooler Assy TMC-60		
FIG.	REF.	QTY	DESCR.	FROM	UPTO
1	24880107	1	Kit Oil Cooler TMC-60 D.25		
2	54081020	2	Clamp DIN 3017 20-32/9 W4		
3	52102157	1	Bolt DIN 933 M6-20 8.8		
4	51030006	1	Washer DIN 125-6		
5	59071383	1	Clamp TYP.1 38/15 W1		
6	13817011	1	Bracket		
7	51031006	1	Washer DIN 9021 6		
8	52120006	1	Nut DIN 934 M6 8.8		
NS	M87502535	1	Water Intake Hose (HQ) D. 25-33 [NS]		
NS	58088281	2	Pastic Cable Zip Tie [NS]		

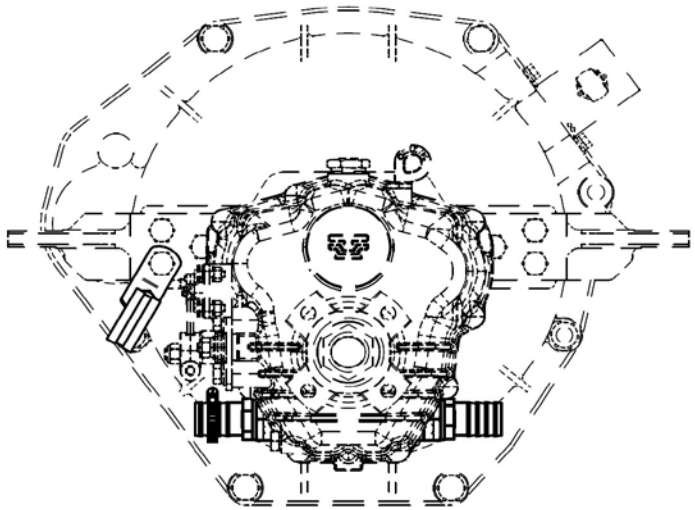

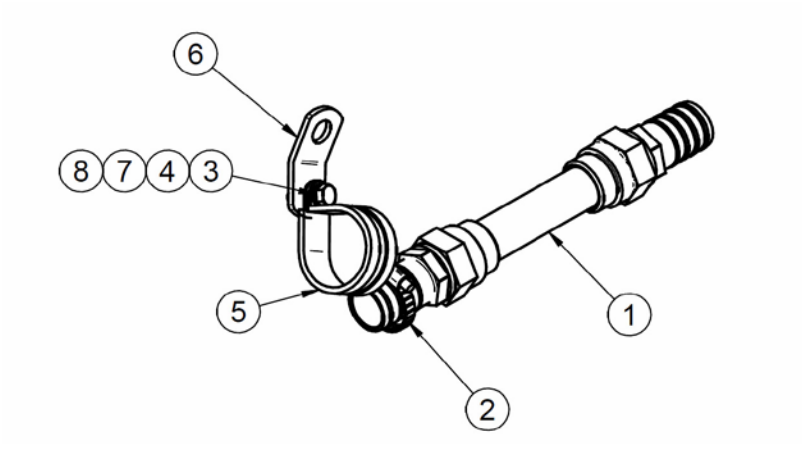

[NS] Not shown

Exhaust System

	17613042		Exhaust Flange (S)		
FIG.	**REF.**	**QTY**	**DESCR.**	**FROM**	**UPTO**
1	17613042.1	1	Exhaust Flange (S)		

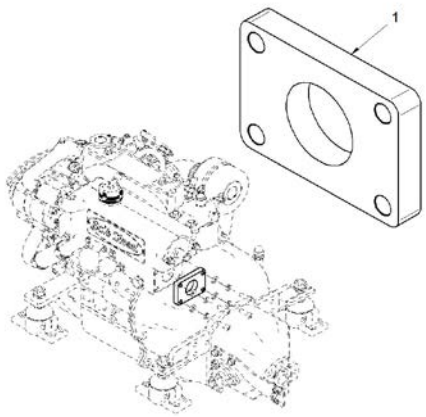

Exhaust System

	17613115C		Dry Exhaust SYStem, Elbow (S)		
FIG.	**REF.**	**QTY**	**DESCR.**	**FROM**	**UPTO**
1	17613115	1	Kit Dry Exhaust With Flexible Pipe (S)		
2	13211035	1	Exhaust Manifold Outlet Bend		

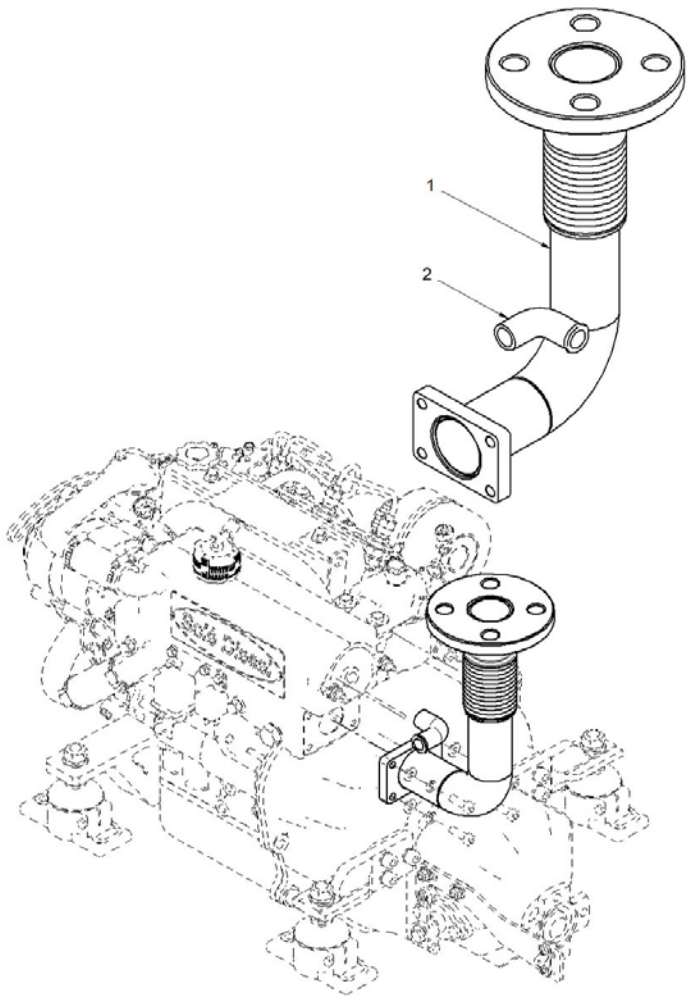

Exhaust System

	17613118		Kit Dry Exh. Flexible Pipe & Silencer(S)		
FIG.	**REF.**	**QTY**	**DESCR.**	**FROM**	**UPTO**
1	17613115	1	Kit Dry Exhaust With Flexible Pipe (S)		
2	52120016	4	Nut DIN 934 M16 8.8		
3	53033016C	4	Washer	10/12/2009	
4	51030016	8	Washer DIN 125-16		
5	13413016	1	Gasket		
6	52101465	4	Bolt DIN 931 M16-60 8.8		
7	13813018	1	Exhaust Muffler		
8	13413019	1	RAINCover		

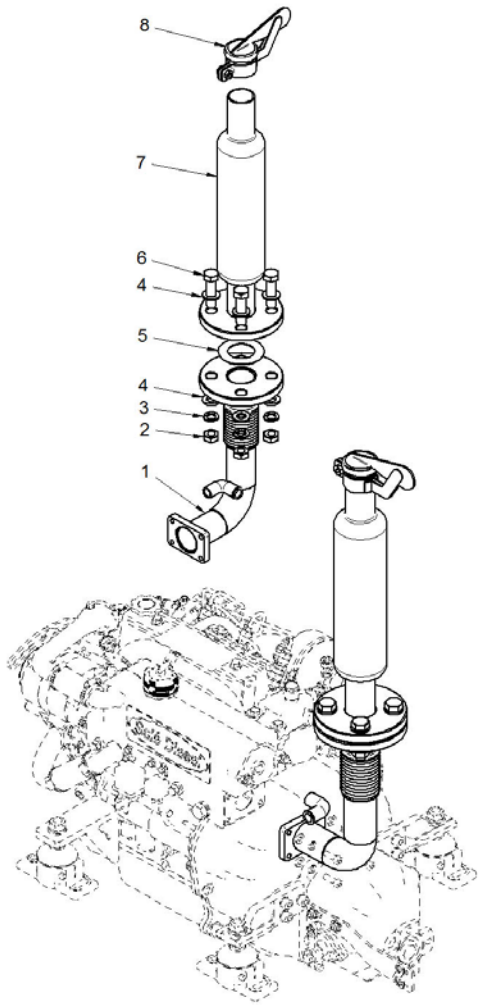

Power Take-off Pulley

	13110101		Pulley 2B (S)		
FIG.	**REF.**	**QTY**	**DESCR.**	**FROM**	**UPTO**
1	13110101.1	1	Pulley 2B		
2	53033010	3	Washer GROWER DIN 127-10		
3	52201315	3	Bolt DIN 931 M10-1,25-60 8.8		

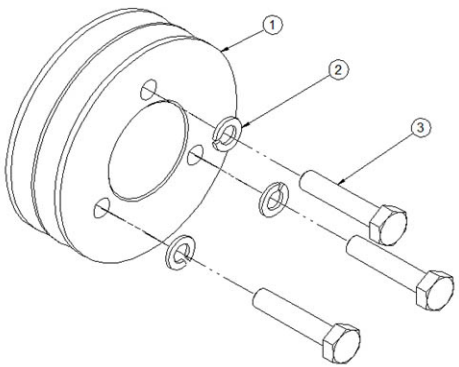

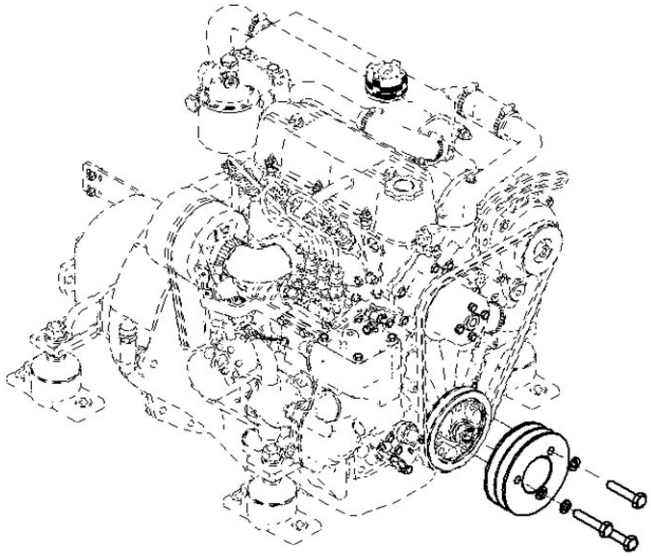

Power Take-off Pulley

	13110102		Pulley 1B (S)		
FIG.	**REF.**	**QTY**	**DESCR.**	**FROM**	**UPTO**
1	13110102.1	1	Pulley		
2	53033010	3	Washer GROWER DIN 127-10		
3	52202311	3	Bolt DIN 933 M10-1,25-40 8.8		

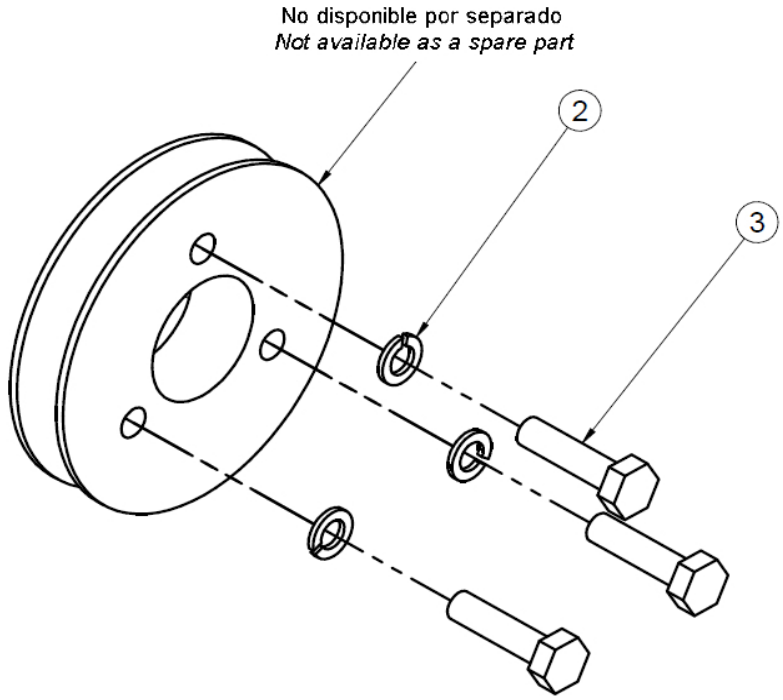

Power Take-off Pulley

	13110202		Pulley 2A (S)		
FIG.	**REF.**	**QTY**	**DESCR.**	**FROM**	**UPTO**
1	13110202.1	1	Pulley 2A	15/06/2016	
2	53033010	3	Washer GROWER DIN 127-10	15/06/2016	
3	52201313	3	Bolt DIN 931 M10-1,25-50 8.8	15/06/2016	

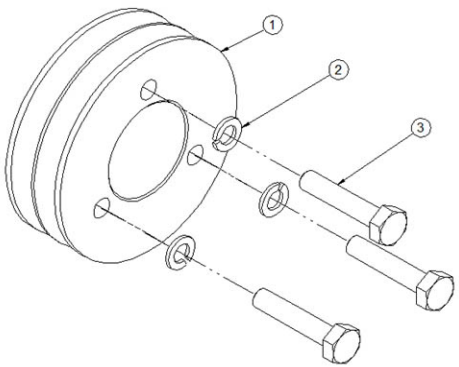

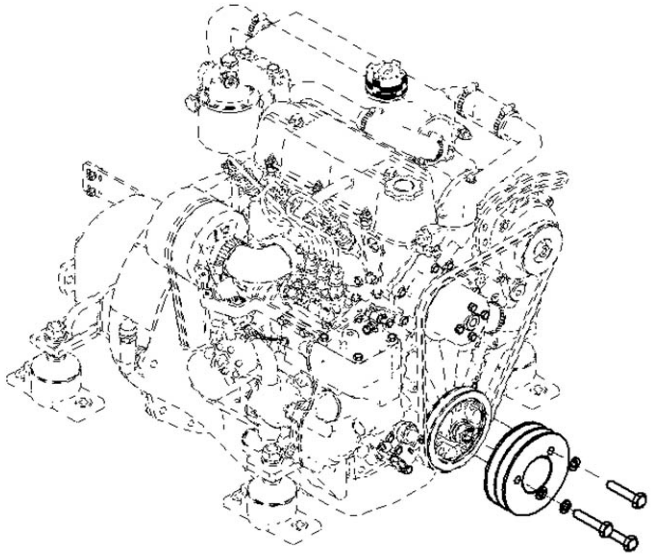

Kit Keel Cooling

17611200.2			Kit Keel Cooling & Dry Exhaust (S)		
FIG.	REF.	QTY	DESCR.	FROM	UPTO
1	13120046	1	Cover Oil Pump SH		
2	13120047	1	Gasket Water Pump		
3	13911002	2	Cover		
4	13811007	2	O-Ring D. 57X2,5		
5	17613014	1	Gasket		
6	17613042	1	Exhaust Flange (S)		
7	52103259	4	Bolt DIN 912 M8-30 8.8		
NS	52102157	1	Bolt DIN 933 M6-20 8.8 [NS]		04/07/2017
NS	53038006	1	Washer DIN 6798-A 6 [NS]		04/07/2017

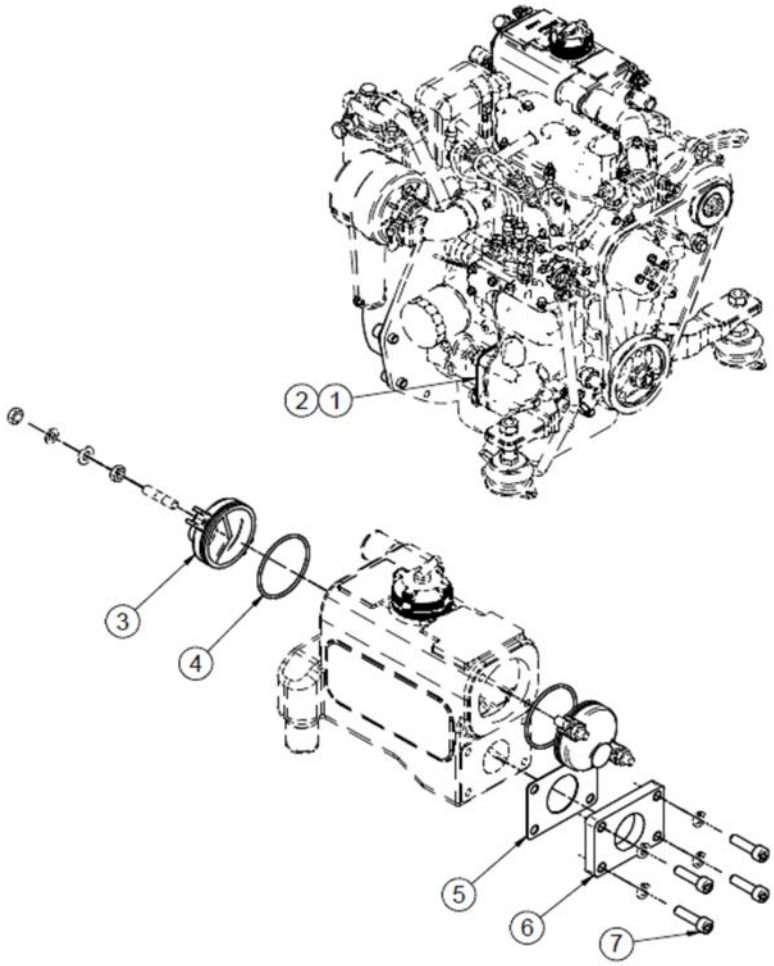

[NS] Not shown

Kit Instrument Panel SVT

13817217			Suplement Panel SVT 30 MINI-17/29		
FIG.	**REF.**	**QTY**	**DESCR.**	**FROM**	**UPTO**
1	60938132	1	SVT 30 MINI-17/29 Panel		
2	13817053	1	SENDER Holder		
3	60900985	1	Pressure Sensor		
4	TFH.1M.6.3.08	1	Straight Receptacle 1 Sec. Faston		
5	60900063	1	Insulator Cap Faston 6.3		

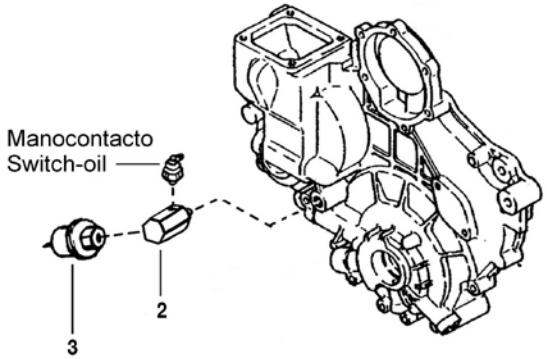

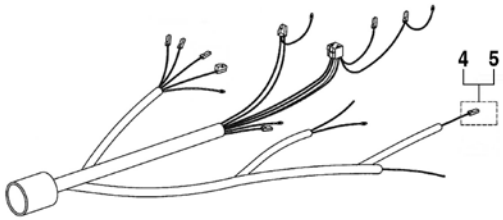

Kit Instrument Panel SVT

60910022			SVT 20 Panel 12V + Exh. Temp. Alarm Kit		
FIG.	**REF.**	**QTY**	**DESCR.**	**FROM**	**UPTO**
1	60900280	1	Exhaust Temperature Alarm Kit		
2	60910001	1	SVT 20 Panel 12V		

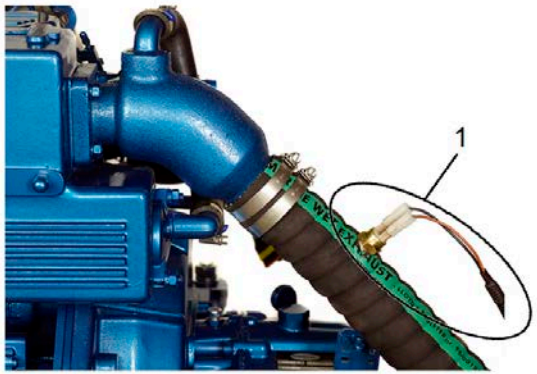

Kit Instrument Panel SVT

60910024			SVT 30 Panel 12V + Exh. Temp. Alarm Kit		
FIG.	**REF.**	**QTY**	**DESCR.**	**FROM**	**UPTO**
1	60900280	1	Exhaust Temperature Alarm Kit		
2	60910004	1	SVT 30 Panel 12V		

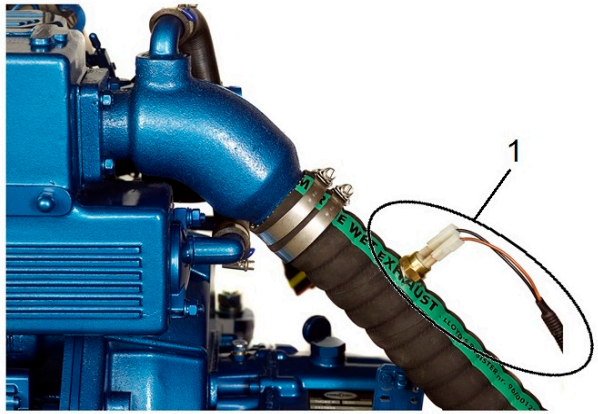

Kit Instrument Panel SVT

60938135			Kit 2nd Panel SVT 40 MINI-17/29 12V		
FIG.	**REF.**	**QTY**	**DESCR.**	**FROM**	**UPTO**
1	60938130	1	SVT 20 MINI-17/29 Panel	15/06/2016	
2	60938134	1	SVT 40 MINI-17/29 Panel	15/06/2016	
3	60900210.2	1	T Double Panel DERIVATION	15/06/2016	

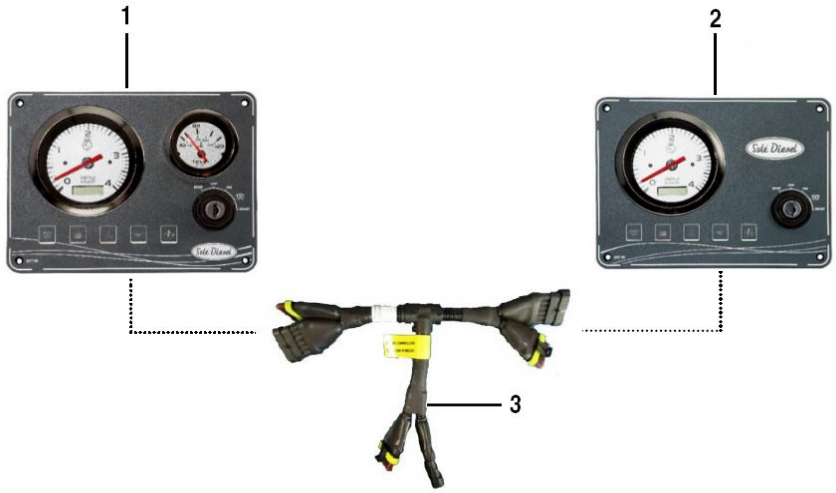

SVT 10 Panel

	60910000		SVT 10 Panel 12V		
FIG.	REF.	QTY	DESCR.	FROM	UPTO
1	60930005.1	1	Panel N.1		
2	60900037	1	Key-Locking		
3	60900037.2	1	Connector		
4	54108004	2	Bolt DIN 84 M3-12 INOX.		
5	60900301.2	1	Integrated Circuit Plate 12V Protection		30/08/2017
5	60900301.3	1	V3 C.I. 12V Prop. Engine Board.Varnished	31/08/2017	
6	60930006.1	1	Gasket Panel		
7	60900096	1	Cover Plate for Motor Propeller		
8	60900091	1	MICRO Relay 12V 12-20		

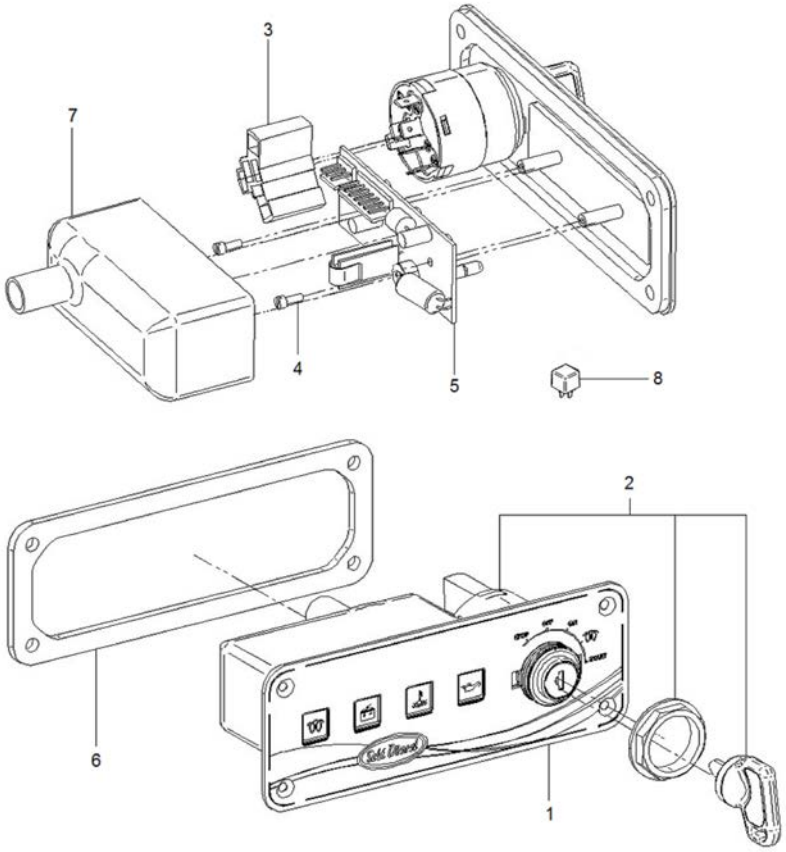

Kits NMEA 2000 - one engine
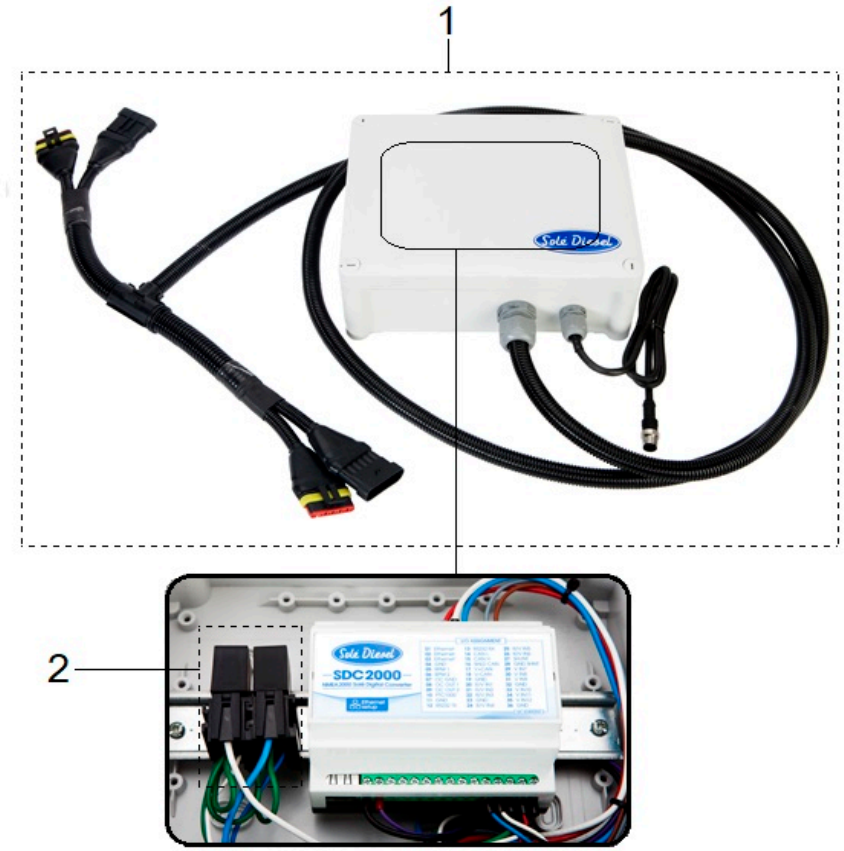
	61438100		Kit SDC 2000 MINI-17/29 12V		
FIG.	**REF.**	**QTY**	**DESCR.**	**FROM**	**UPTO**
1	61400200	1	Kit SDC 2000 24V Standard		
2	60900091	2	MICRO Relay 12V 12-20