Engine Mini-33 v4

VERSION 2017-10

SPARE PARTS MANUAL

PARTS LIST CATALOGUE

NORMS TO PLACE AN ORDER:

For fast and more efficient service, please specify the following information on spare parts orders that must be preferably done by FAX or e-mail as specified below:

1- Engine model: As shown in identification plate

2- Engine serial number: As shown in identification plate and stamped on crankcase

3- Item description + part number + quantity required

Spare parts requests must be adressed to:

recambios@solediesel.com

Telf.: +34 93 775 44 05

Fax: +34 93 775 30 13

The components shown in the catalog have:

- Figure: Number by which they are represented in scheme
- Description: Trade name of the component
- Quantity: Total number of parts used in the assembly of the part represented (may differ from the total minimum quantities)

Hoses, indicates the total length in meters

The diagrams shown in this catalog of spare parts, have only the purpose to identify the piece in question, its representation is not meaningful and may differ from the actual piece.

In case of doubt, contact Solé Diesel, or your authorized dealer.

The parts i / or references in this catalog are subject to change without notice.

SOLÉ, S.A.

C-243b, Km, 2 - P.O. BOX 15

08760 Martorell (Barcelona) Spain

Download the latest version of this manual HERE

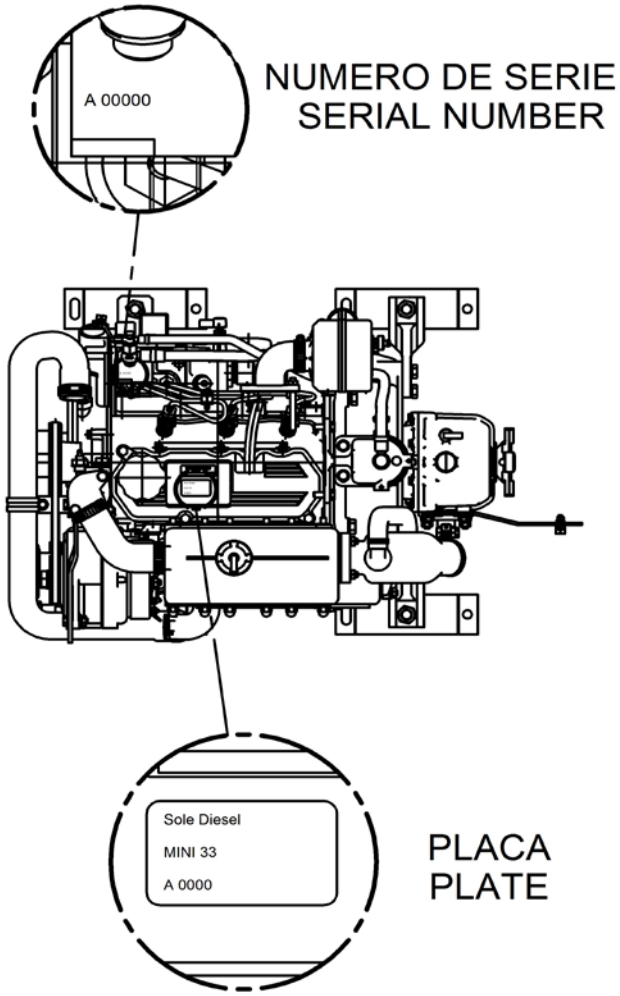

Contents

Engine Body
Cylinder Head
Rocker Cover and Breather
Valve Drive
Timing Parts
Gear Case
Cranckcase
Rear Plate
Piston & Connection Rod
Crankshaft & Flywheel
Oil System
Oil Pan
Engine Brackets

Inlet & Exhaust
Inlet

Cooling System
Water Pump
Cooler Pipes
Water Cooler,Assy MINI-33
Body, Water Cooler And Cap
Wet Exhaust
1/2" Pump Water, Set
1/2" Pump Water, Set

Fuel System
Fuel Pipe
Injection Nozzle
Fuel Injection Pump
Governor Parts
Fuel Supply Parts

Electrical System
Kit Alternator 14V.95A.
Starter Assy
Electrical Wiring
Deluxe Instrument Panel
SVT 20 MINI-33/44/55 Panel
SVT 30 MINI-33/44/55 Panel

Maintenance Kit
Gasket Kit
Pipe Rubber Set, Water Line
Repair Kit Water Pump 1/2"
Repair Kit Water Pump 1/2"

Gearbox TMC-40P
Sheet 1/2
Sheet 2/2
Maintenance Kit

Gearbox TMC-60P
Sheet 1/2
Sheet 2/2
Kit de Service

Gearbox TMC-60A
Sheet 1/2
Sheet 2/2
Kit de Service

SP60 S.Drive
Sheet 1/4 SP60 S.Drive V1
Sheet 2/4 SP60 S.Drive V1
Sheet 3/4 SP60 S.Drive V1
Sheet 4/4 SP60 S.Drive V1
Sheet 1/4 SP60 S.Drive V2
Sheet 2/4 SP60 S.Drive V2
Sheet 3/4 SP60 S.Drive V2
Sheet 4/4 SP60 S.Drive V2
Maintenance Kit

Gearbox TM-345
Sheet 1/4
Sheet 2/4
Sheet 3/4
Sheet 4/4
Maintenance Kit

Gearbox TM-345A
Sheet 1/4
Sheet 2/4
Sheet 3/4
Sheet 4/4
Maintenance Kit

Kit Gearbox
Kit S-Drive VOLVO 120SB/120SC/120SE
Kit S-Drive VOLVO 110S
Kit SDRIVE SELVA
Kit GearBox RONIM-5
Kit Z-Drive Volvo 270/280/290 Z=10
Kit GearBox VOLVO MS-2 & MS-2B
Kit S-Drive VOLVO 130S
Kit Z-Drive Volvo 280/290 Z=26
Kit S-Drive BUKH DV20
Kit GearBox TM-345/A
Kit GearBox TM-345A (Without Cooler)
Kit PRM DELTA Adap.BW Without OilCooler
Kit PRM DELTA & Adapter BW & OilCooler
Kit GearBox BW (Without Oil Cooler)
Kit GearBox PRM-160 SAE 7
Kit GearBox HURTH-150A,ZF 15M IV
Kit GearBox TMC-60/60A
Kit GearBox TMC-40
Kit GearBox TTMC35A2
Kit GearBox TMC-260
Kit GearBox TMC/ZF/PRM
Kit S-Drive TECHNO.SP60
Kit S-Drive BUKH DV36
Kit GearBox PRM-150 Without Oil Cooler

Electrical System
Kit Isolated SOLAS
Kit 2nd Alternator 28V/55A
Kit 2nd Alternator 14V/90A
Kit Wire Earth Isolated Alternator 14V/9
Kit Water Leak Sensor & Alarm SP60 12V

Other Kits
SAE 5,Adaptor Flange
Pression Gauge Kit
Kit Trolling Valve for TM-345/A
Motor Bracket Width 195
Motor Bracket Width 205
Motor Bracket Width 220
Kit Bobtail SAE-7
Boiler Kit (S)
Kit Cooler Assy TMC-60
Kit Cooler Assy TMC-60

Exhaust System
Kit Dry Exhaust With Flexible Pipe (S)
Kit Dry Exh. Flexible Pipe & Silencer(S)

Power Take-off Pulley
Pulley 2B (S)
Pulley 2A (S)
Kit Power Take-off Shaft D40 & Pulley 3A
Kit Power Take-Off Shaft D40
Kit Pulley 3A (S)

Kit Keel Cooling
kit Keel Cooling & Dry Exhaust
Kit Keel Cooling & Dry Exhaust (S)
Kit Refroid. Quille et Esc. Sec TM-345

Kit Instrument Panel SVT
Suplement Panel SVT 30 MINI-33/44/55
SVT 20 Panel 12V + Exh. Temp. Alarm Kit
SVT 30 Panel 12V + Exh. Temp. Alarm Kit
Kit 2nd Panel SVT 30/40 MINI-33/44/55
Kit 2nd Panel SVT 40 MINI-33/44/55 12V
Kit 2nd Panel SVT 40 MINI-33/44/55 24V

Kits NMEA 2000 - one engine
Kit SDC 2000 MINI-33/44/55 12V
Kit SDC 2000 MINI-33/44/55 24V

Engine Body

D_MIC1_1_1			Cylinder Head		
FIG.	REF.	QTY	DESCR.	FROM	UPTO
1	17221001	1	Head Assy, Cylinder		
2	(*)	8	Not available [NP]		
2A	17221012.4	1	Cap Sealing		
2B	13220012	5	Cap Sealing		
2E	17221002.4	3	Guide, Valve Exhaust [NP]		
2F	17221003.4	3	Guide, Valve, Inlet		
2G	17221015	3	Jet, Combustion		
3	17621011.4	1	Plug TAPER		
4	17221005	11	Bolt,cylinder head		
5	17221004	1	Gasket, Cylinder Head		
6	17210008	2	HANGER, Engine		
7	13322079	2	Bolt		

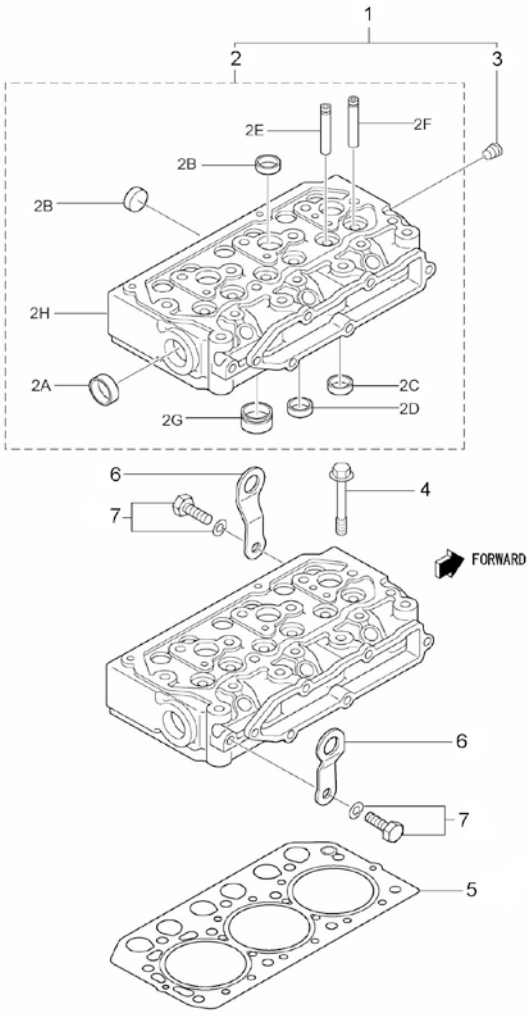

[NP] Not provided

D_MIC1_1_2			Rocker Cover and Breather		
FIG.	REF.	QTY	DESCR.	FROM	UPTO
1	17221009	1	Cover Assy, Rocker		
2	17221010	1	Gasket, Rocker Cover		
3A	52101261	4	Bolt DIN 931 M8-40 8.8		
3B	53033008	4	Washer GROWER DIN 127-8		
4	13221003	1	Cap Oil FILLER		
5	17221006.4	1	Pipe [NP]		

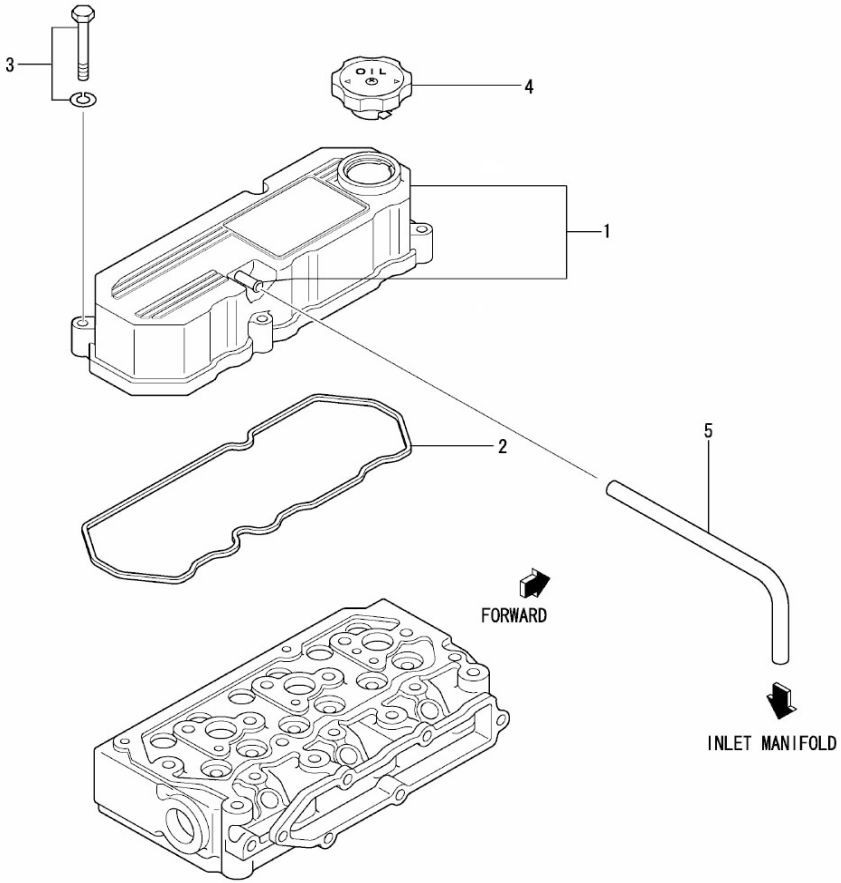

[NP] Not provided

Engine Body

D_MIC1_1_3 Valve Drive

FIG.	REF.	QTY	DESCR.	FROM	UPTO
1	17222055	3	Intake Valve		
2	17222056	3	Exhaust Valve		
3	17222057.4	6	Rocker Shaft Support		
4	13822058	6	Retainer Valve SP		
5	17622059.4	12	LOCK Valve		
6	13222054	6	Seal Valve Stem		
7	13822069	6	Cap Stem		
8	17222146	1	Rocker & Shaft Assy		
8A	17222053	1	Bolt		
8B	17222050	2	Ring, SNAP		
8C	17222142	6	Rocker Assy		
8CA	17122060	6	Nut		
8CB	17122044	6	Screw Adjusting		
8D	17222048.4	1	Bracket, Rocker Shaft		
8E	17222049.4	2	Bracket, Rocker Shaft		
8F	17222046.4	1	Shaft Assy, Rocker		
8FA	17222025.4	2	Cap, Sealing [NP]		
8G	17222053.4	3	Bolt		
8H	17222047.4	2	Spring		

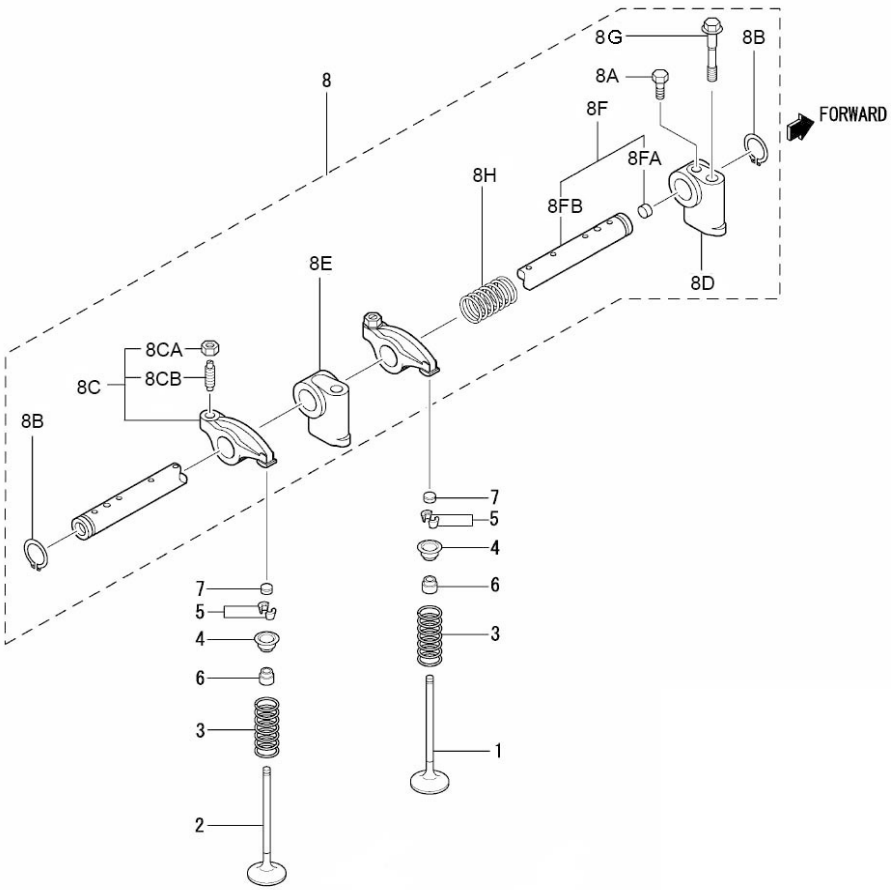

[NP] Not provided

Engine Body

D_MIC1_1_4			Timing Parts		
FIG.	REF.	QTY	DESCR.	FROM	UPTO
1	17222040	1	Shaft,Fuel INJ. Pump		
2	13222062	1	Ball Bearing 6228		
3	17222065	1	Washer		
4	13222060	1	Key, Sunk [NP]		
5A	52102256	1	Bolt DIN 933 M8-15 8.8		
5B	53033008	1	Washer GROWER DIN 127-8		
6	17222035	1	CamShaft		
7	17222020.4	1	KEY		
8	17422075	1	Plate,THRUST		
9A	52102261	2	Bolt DIN 933 M8-40 8.8		
9B	53033008	2	Washer GROWER DIN 127-8		
10	13222061	6	Tappet		
11	17222041.4	6	ROD, PUSH		
12	17222037	1	Gear, CamShaft		
13	17222043.4	1	Gear, Injection Pump		
14	17222038.4	1	Gear Assy, IDLER		
15	17222066	1	Gear, Pressure Oil Pump		
16	17022067	2	Ball Bearing 6205-C3		
17	17311026	1	Coupling,Water Pump		

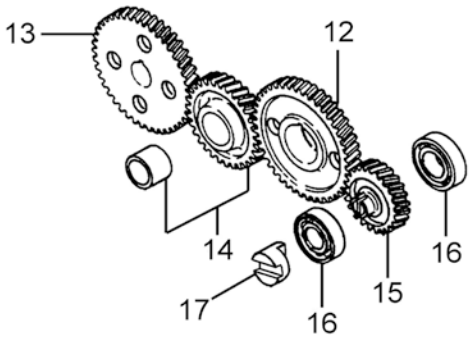

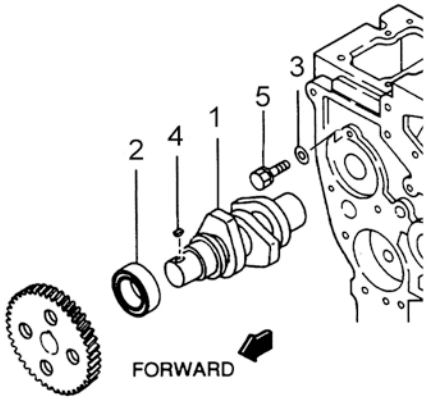

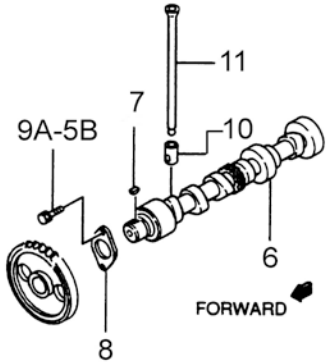

[NP] Not provided

Engine Body

D_MIC1_1_5			Gear Case		
FIG.	REF.	QTY	DESCR.	FROM	UPTO
1	17220024	1	Plate, Front		
2	17220018.4	1	Gasket, Front Plate		
3A	52102256	7	Bolt DIN 933 M8-15 8.8		
3B	53033008	14	Washer GROWER DIN 127-8		
4	17220035	1	Case Gear		
5	17220040	1	Gasket, Gear Case		
6	17220034.4	8	Bolt		
7	13220039	1	Seal Oil		
8	17220037	1	Housing, Gear Pump		
9	17220038	1	Gasket, Housing		
10	13120046	1	Cover Oil Pump SH		
11	13120047	1	Gasket Water Pump		
12	13322078	1	Bolt		
13A	52101260	1	Bolt DIN 931 M8-35 8.8		
14	17120049	2	Nut M8		
15	17024062	2	Bolt		
16	17011007	1	O-Ring D. 57X3		
17	13811062	4	Pump Bracket		
18	51030008	4	Washer DIN 125-8		
19	52102257	4	Bolt DIN 933 M8-20 8.8		
20	17621003	1	Cap Oil FILLER		

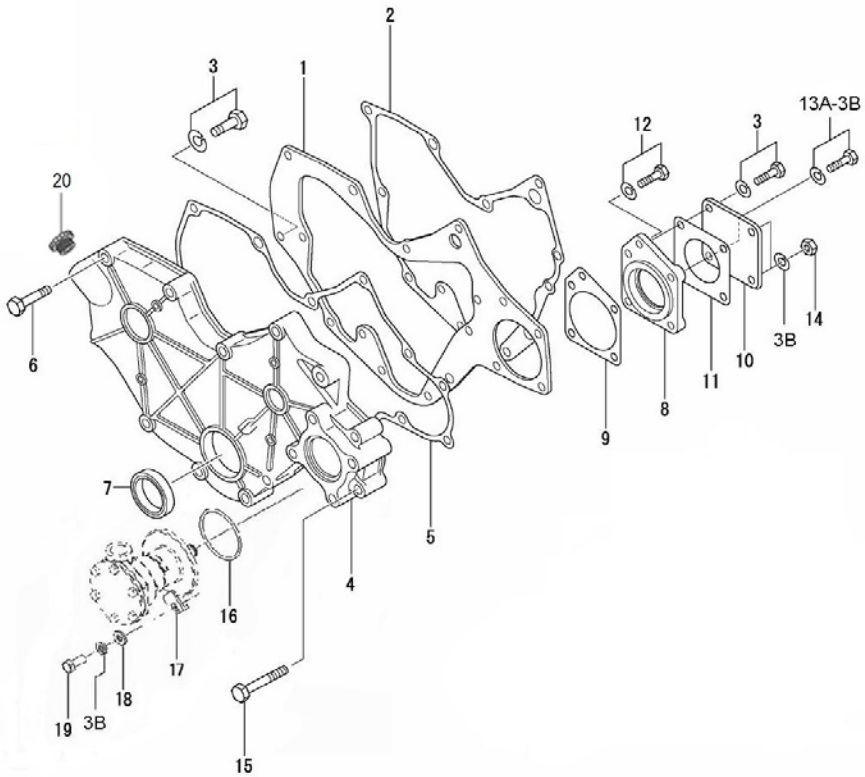

Engine Body

D_MIC1_1_6			Cranckcase		
FIG.	REF.	QTY	DESCR.	FROM	UPTO
1	17220001.4	1	Block Assy, Cylinder		
2	(*)	1	Not available [NP]		
2A	17220006.4	2	Cap, SealING [NP]		
2B	17221012.4	2	Cap Sealing		
2C	17220009	8	Bolt Bearing Cap		
2D	17220011	1	Bushing, CamShaft		
3	17620007.4	1	Guide		
4	17220012.4	1	Cap, Sealing		
5	17220013	3	Cap, SealING		
6	17220013.4	1	Plug		
7	17220010.4	4	BUSHING,KNOCK		
8	17620022.4	2	BUSHING,KNOCK		
9	17220022.4	1	BUSHING,KNOCK		
10	17220019	1	Plug, Expansion		
11	17620020.4	1	Pin		
12	17620036.4	2	Pin Dowel		
13	17220014.4	1	Shaft Assy, IDLER		
13A	17220028	1	Ball		
14	17220002	4	Seal, Side		
15	17624047.4	1	Shaft Oil Filter		
16	17120019	2	Pin, dowel		
17	17220023.4	1	Plug, TAPER		
18	17020014	1	Cap		
19	13220028	4	Bolt		
20	17220015.4	1	Case, Oil Seal		
21	17220016	1	Gasket, Oil Seal Case		
22	17220063	1	Seal, Oil		
23	17220059.4	5	Bolt		
24	17620024.4	1	Plug TAPER		
25	13620003	1	Metal Set STD.		
26	13620004	1	METAL Set 0.25		
27	13620005	1	METAL Set 0.50		
28	13620006	1	METAL Set 0.75		
29	17220029.4	1	Gauge Oil LEVEL [NP]		

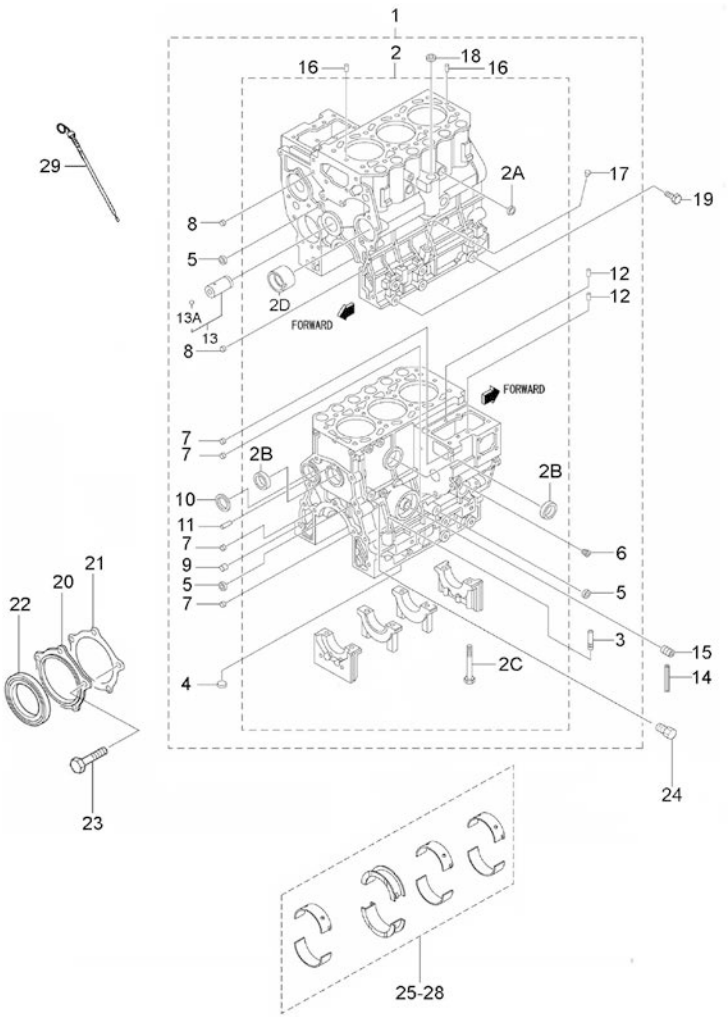

[NP] Not provided

Engine Body

D_MIC1_1_7			Rear Plate		
FIG.	REF.	QTY	DESCR.	FROM	UPTO
1	17220017	1	Plate, REAR		
2	13220026	2	Pin KNOCK (10X12)		
3A	52202359	8	Bolt DIN 933 M12-1,25-30 8.8		
3B	53033008	8	Washer GROWER DIN 127-8		

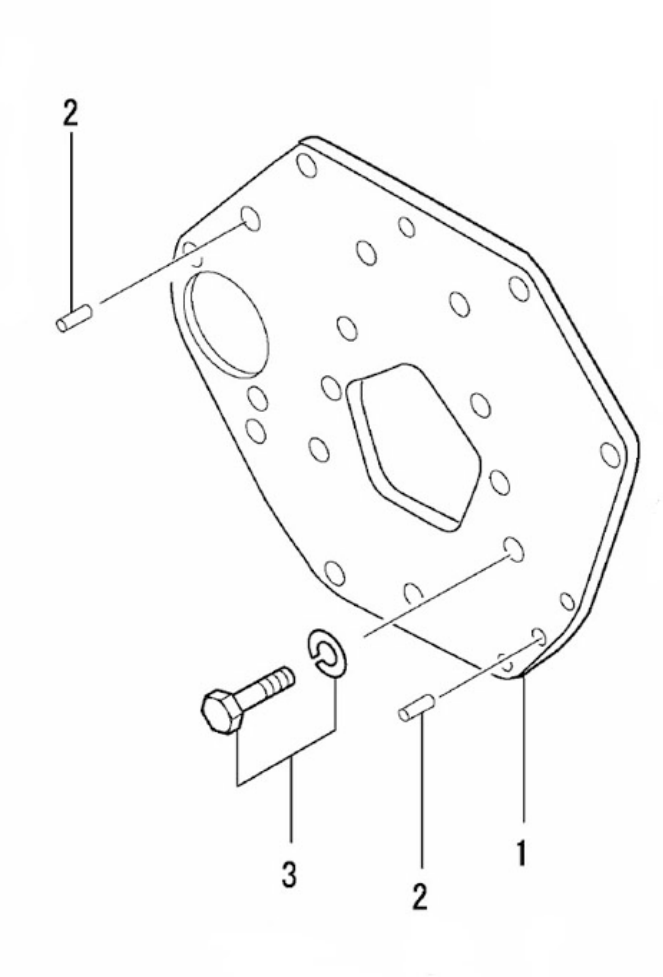

Engine Body

D_MIC1_1_8			Piston & Connection Rod		
FIG.	REF.	QTY	DESCR.	FROM	UPTO
1	17222001	3	Piston STD.		
2	17222002	3	Piston + 0,25		
3	17222003	3	Piston + 0,50		
4	17222006	3	Ring Set, Piston STD		
5	17222007	3	Ring Set, Piston + 0,25		
6	17222007	3	Ring Set, Piston + 0,25		
7	17222009	3	Pin, Piston		
8	17222010	3	Rod Assy, Connecting		
8A	17022011	6	Nut,connecting rod		
8B	17222013	6	Bolt,connecting rod		
9	17222014	3	Metal Set, Con Rod STD.		
10	17222015	3	METAL Set, CON ROD - 0,25		
11	17222016	3	METAL Set, CON ROD - 0,50		
12	17222017	3	METAL Set, CON ROD - 0,75		

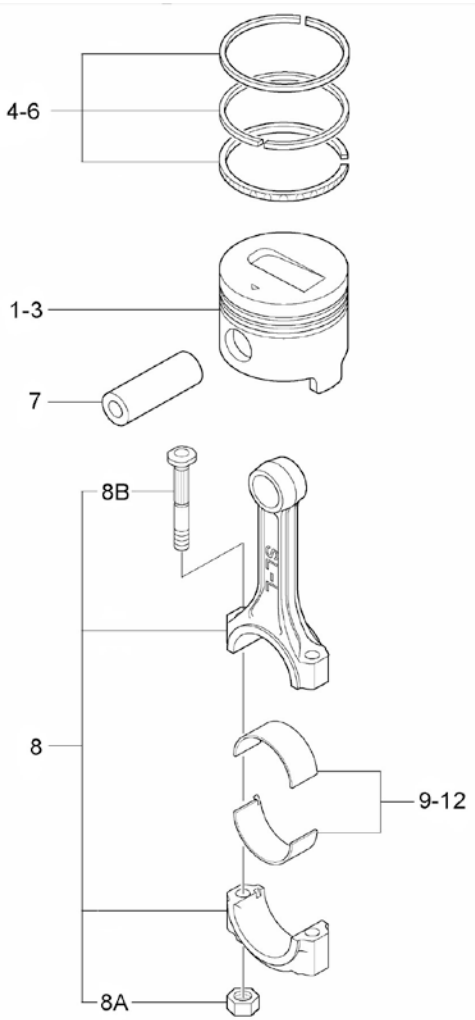

Engine Body

D_MIC1_1_9			Crankshaft & Flywheel		
FIG.	REF.	QTY	DESCR.	FROM	UPTO
1	17222018	1	CrankShaft		
2	17222020.4	2	KEY		
3	17222051	1	Washer, Plain		
4	53033018	1	Washer GROWER DIN 127-18		
5	13222026	1	Nut		
6	17222024	1	Pulley CrankShaft		
7	17222027	1	Flywheel SUB Assy		
7A	13222029	1	Gear		
8	17222031.4	4	Bolt Drive		
9	17222021.4	1	Gear, CrankShaft		

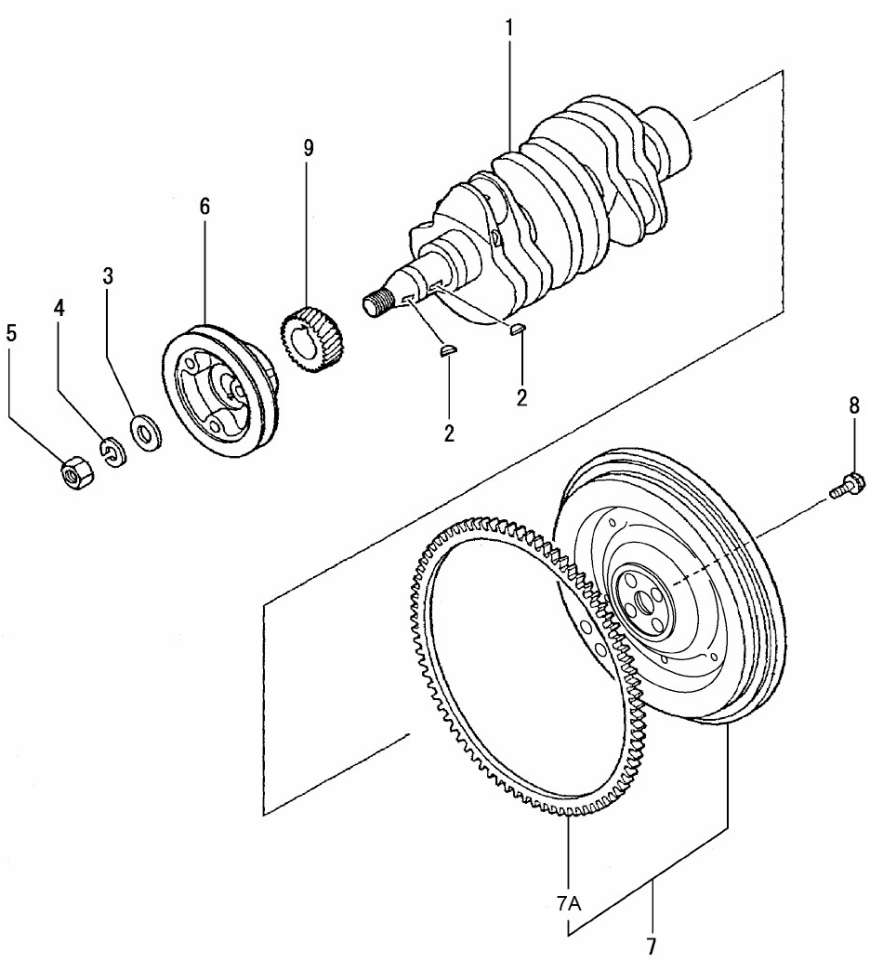

Engine Body

D_MIC1_1_10			Oil System		
FIG.	REF.	QTY	DESCR.	FROM	UPTO
1	17224040	1	Pump Assy, Oil		
1A	17224041	1	Packing, Body		
2	52102258	3	Bolt DIN 933 M8-25 8.8		
3	17224052.4	1	Strainer Assy		
3A	51221016	1	Nut DIN 936 M16X1,5 5.6 ZINC		
4	17024001	1	Gasket		
5	17124071	1	Valve, Assy		
6	17424063	1	Gasket		
7	13124051	1	Filter Oil Element		
8	17127027	1	SWITCH, oil pressure		

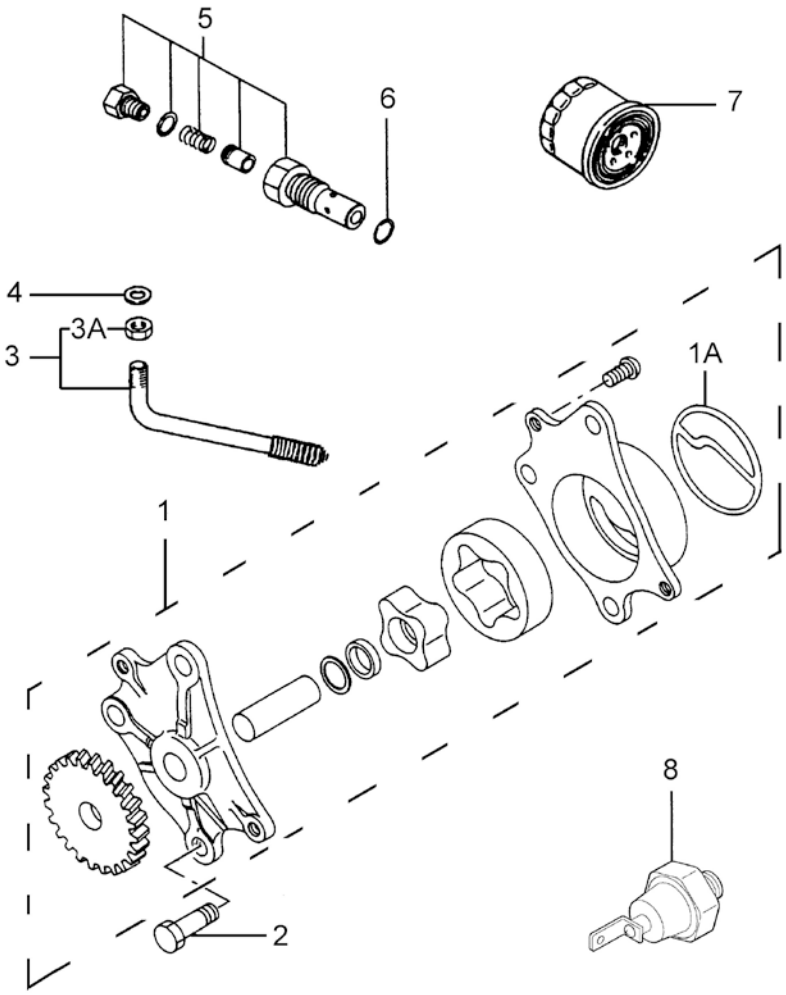

Engine Body

D_MIC1_1_11			Oil Pan		
FIG.	REF.	QTY	DESCR.	FROM	UPTO
1	17220030.4	1	PAN Assy, Oil		
2A	52102256	15	Bolt DIN 933 M8-15 8.8		
2B	53033008	15	Washer GROWER DIN 127-8		
3	17214021	1	ExtraCTION, Hose		
4	17214022	1	Bracket, Pipe		
5	12814051	1	Screw,eye		
6	56000219	1	Washer 14-20-3		
7	56000069	2	Washer 14-20-1,5		
8	52220012	1	Nut DIN 934 M12-1,25 8.8		
9	51030012	1	Washer DIN 125-12		
10	53038012	1	Washer DIN 6798-A 12		
11	52202363	1	Bolt DIN 933 M12-1,25-50 8.8		
12	16514020	1	Plug		
13	14714001	1	Pump,oil Suction		

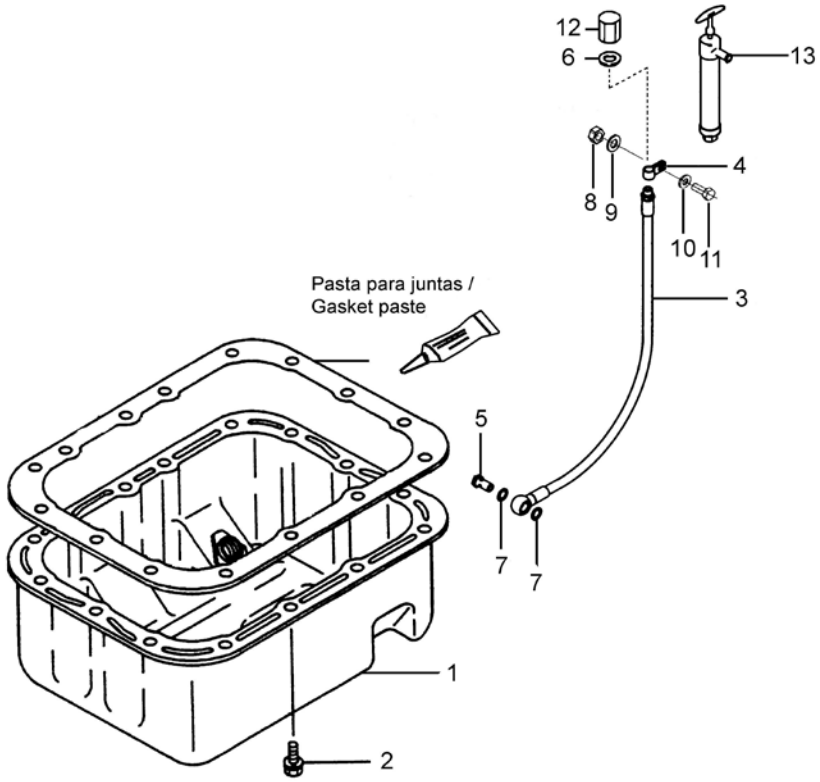

Engine Body

D_MIC1_1_12			Engine Brackets		
FIG.	REF.	QTY	DESCR.	FROM	UPTO
1	17210028	2	Bracket, Front	08/10/2014	
2	53033012	4	Washer GROWER DIN 127-12		
3	52202359	4	Bolt DIN 933 M12-1,25-30 8.8		
4	61673000	4	Anti Vibration Mount Type E 60SHA		

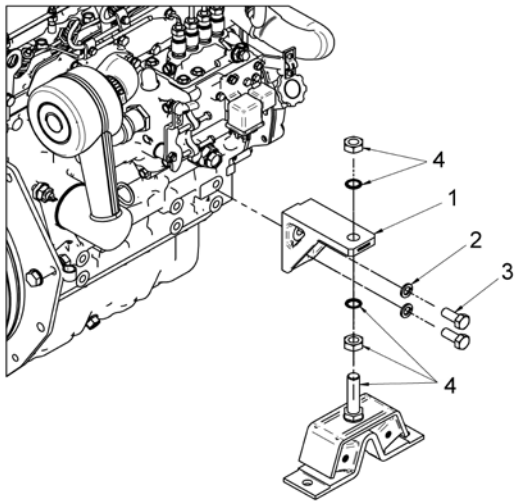

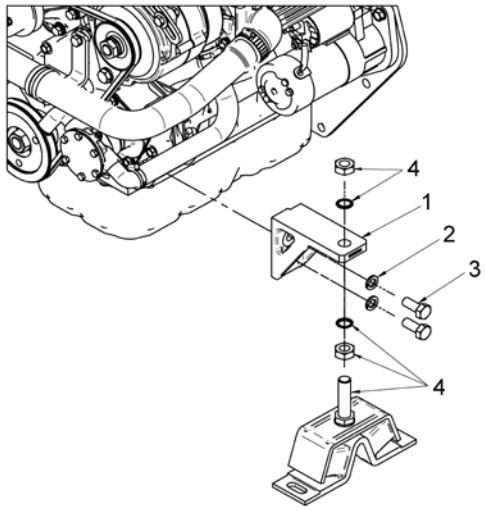

Inlet & Exhaust

D_MIC1_2_1			Inlet		
FIG.	REF.	QTY	DESCR.	FROM	UPTO
1	17221030.4	1	Cover Assy, Inlet		
2	17221032	1	Gasket, Inlet Cover		
3A	52101260	5	Bolt DIN 931 M8-35 8.8		
3B	53033008	5	Washer GROWER DIN 127-8		
4	17221034	1	Gasket, Inlet Pipe		
5	53038008	2	Washer DIN 6798-A 8		
6	17210021	1	Stud		
7	52120008	1	Nut DIN 934 M8 8.8		
8	17210020	1	BEND		
9	52102257	1	Bolt DIN 933 M8-20 8.8		
10	17610012	1	Air Filter Assy without filter element		14/02/2017
10	13810074	1	Filter Air Complete	15/02/2017	
11	15119015	1	CABLE Holder Ball		
12	14419023	1	Ball JOINT		
13	51030006	3	Washer DIN 125-6		
14	52120006	1	Nut DIN 934 M6 8.8		
15	14719013	1	Clamp,cable		
16	52102157	2	Bolt DIN 933 M6-20 8.8		
17	55307104	2	Bolt DIN 86 W3/16-10		
18	17219002	1	Bracket, Engine Control		

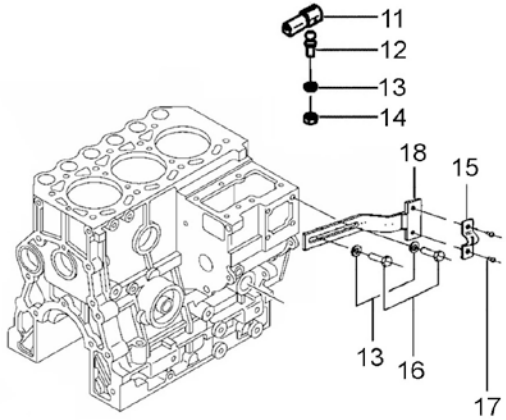

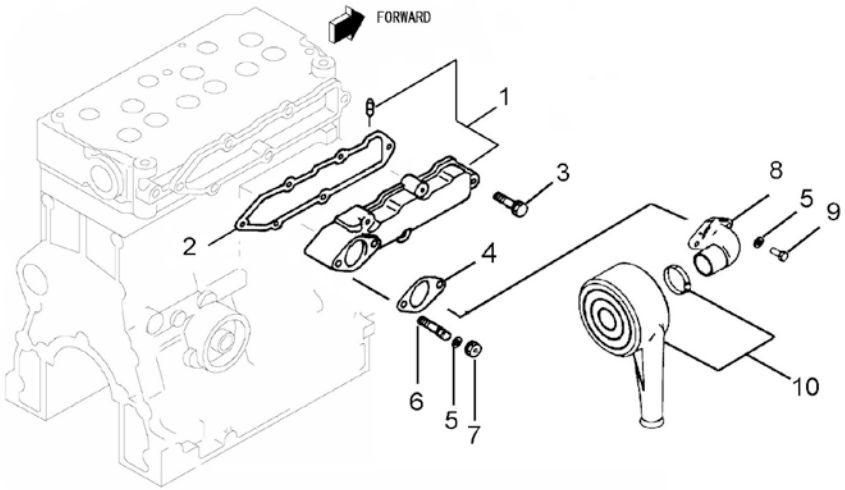

D_MIC1_3_1			Water Pump		
FIG.	REF.	QTY	DESCR.	FROM	UPTO
1	17221020.4	1	Pump Assy, Water		
1AA	52102259	2	Bolt DIN 933 M8-30 8.8		
1AB	53033006	6	Washer GROWER DIN 127-6		
1B	14712032	1	Coupling,ball pipe oil		
1C	13221041	1	Gasket Water Pump		
1D	13221042	1	Plate Water Pump		
2	17221022.4	1	Gasket Water Pump		
3A	52101262	3	Bolt DIN 931 M8-45 8.8		
3B	53033008	7	Washer GROWER DIN 127-8		
4A	52101265	1	Bolt DIN 931 M8-60 8.8		
5	17221021	1	Pulley,Water Pump		
6	17221037	1	Assy Thermostat		
7	17221033.4	1	Gasket, Thermostat Case		
8A	52101266	3	Bolt DIN 931 M8-65 8.8		
9	17221025.4	1	Hose Assy		
9A	17221023	2	Clamp		
9B	17221024.4	1	Elbow		
10A	52102155	4	Bolt DIN 933 M6-12 8.8		
11	17221031	1	Gasket,Thermostat		
12	17221027	1	Thermostat		
13	17211020	1	Fitting, Water Outlet		
14A	52101260	2	Bolt DIN 931 M8-35 8.8		
14B	53038008	2	Washer DIN 6798-A 8		
15	17121013	1	Gasket		
16	17121016	1	Plug, drain		
17	56000073	2	Copper Washer 16-23-1,5		
18	60900980	1	Temperature Sensor		
19	60900070	1	Thermo-Switch 97ºC		

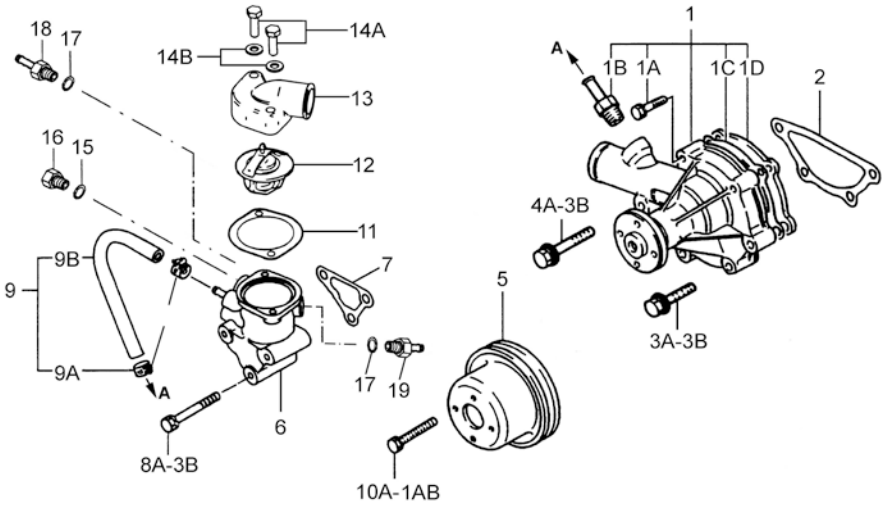

Cooling System

D_MIC1_3_4			Cooler Pipes		
FIG.	REF.	QTY	DESCR.	FROM	UPTO
1	17211000	1	Water Cooler,Assy MINI-33 [NP]		
2	33811000	1	1/2" Pump Water, Set [NP]		24/01/2017
2	37611000	1	1/2" Pump Water, Set	25/01/2017	
3	13811027	2	Exhaust Manifold Outlet Bend		
4	54081020	4	Clamp DIN 3017 20-32/9 W4		09/08/2017
4	54081016	4	Clamp DIN 3017 16-27/9 W4	10/08/2017	
5	17011012	1	Elbow		
6	54082032	4	Clamp DIN 3017 32-50/12 W4		
7	17211006	1	Hose		
8	17211021	1	Elbow		
9	12117044	1	Spacer		
10	17211029	1	Bracket, Pipe		
11	53033006	1	Washer GROWER DIN 127-6		
12	52120006	1	Nut DIN 934 M6 8.8		
13	51071373	1	Clamp 31-40/15 W1		
14	51030006	1	Washer DIN 125-6		
15	52102157	1	Bolt DIN 933 M6-20 8.8		
16	52101265	1	Bolt DIN 931 M8-60 8.8		
17	53033008	1	Washer GROWER DIN 127-8		
18	17221035	1	Gasket, Exhaust Manifold		
19	17211015	6	MANIFOld MOUNTING Stud		
20	56000057	6	Washer 8-13-1,5		
21	55122008	6	Nut DIN 1587 M8		
22	17211034	1	Rubber WET Exhaust Inlet BEND		

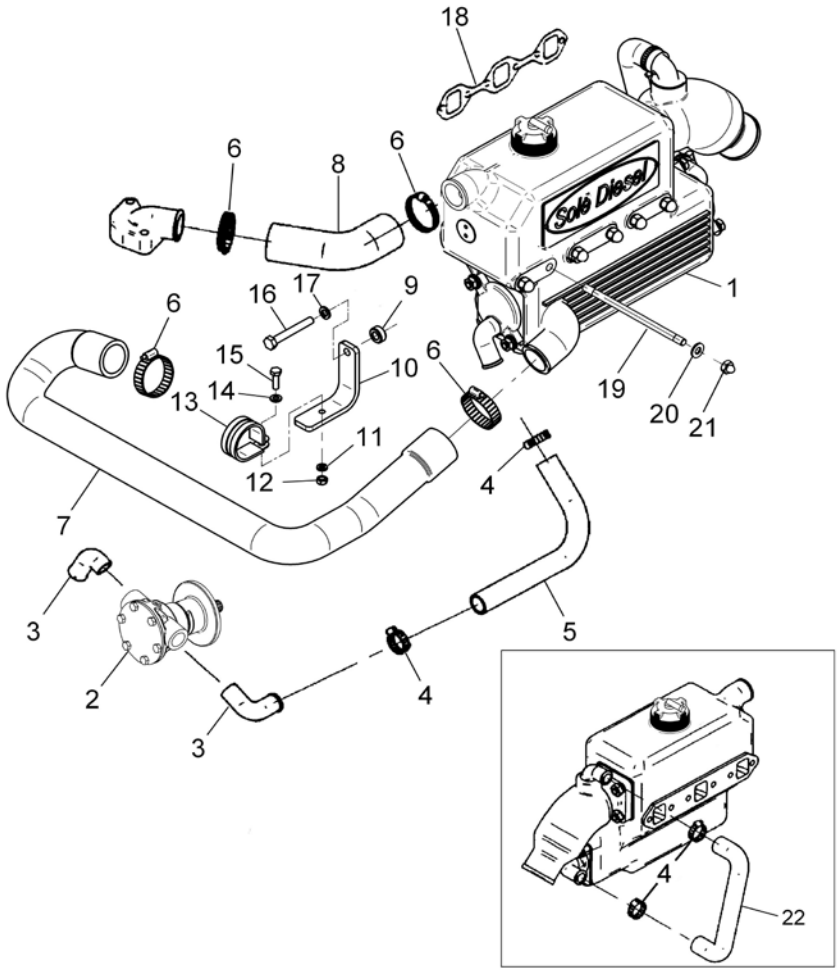

[NP] Not provided

Cooling System

17211000			Water Cooler,Assy MINI-33		
FIG.	REF.	QTY	DESCR.	FROM	UPTO
1	17211001	1	Body, Water Cooler [NP]		
2	13811010	1	Cap		
3	12113092	1	Plug		
4	17211004	1	Element,Water Cooler		
5	13811007	2	O-Ring D. 57X2,5		
6	13811002	2	Cover, water cooler		
7	13211027	1	Water Inlet Bend		
8	13311006	8	Stud,cover		
9	51030008	4	Washer DIN 125-8		
10	53033008	4	Washer GROWER DIN 127-8		
11	54120008	4	Nut DIN 934 M8		
12	56000073	1	Copper Washer 16-23-1,5		
13	12111076	1	Plug		
14	54102306	1	Bolt DIN 933 M10-16 INOX.		
15	56000061	1	Washer 10-16-1,5		
16	13211035	1	Exhaust Manifold Outlet Bend		
NS	17111011	1	Elbow 1 1/8" [NS]		

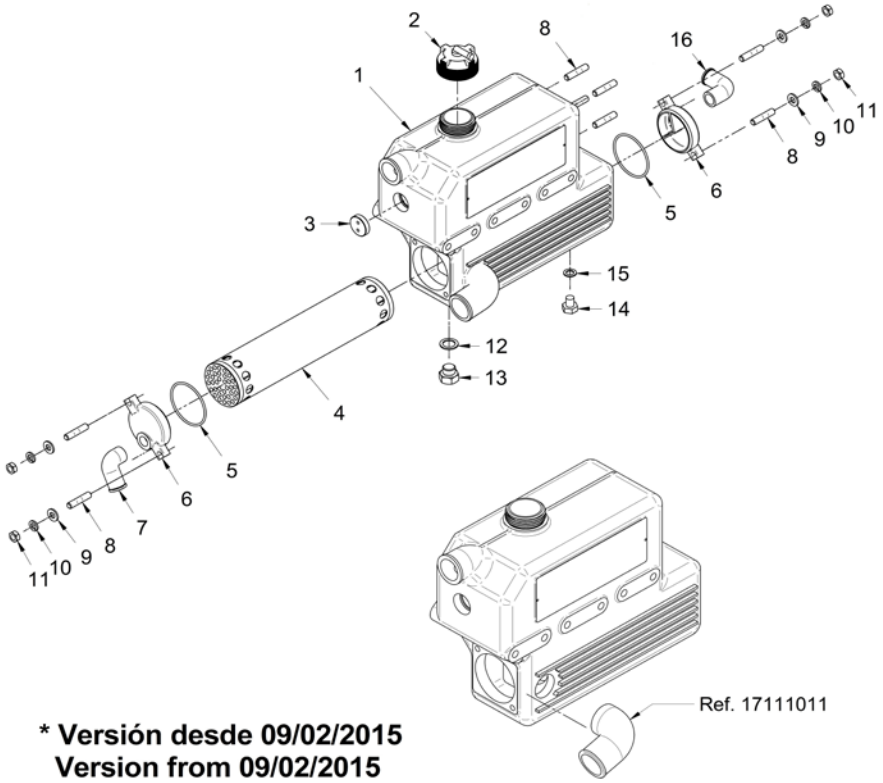

*** Versión desde 09/02/2015**
Version from 09/02/2015

[NP] Not provided
[NS] Not shown

Cooling System

17211001C			Body, Water Cooler And Cap		
FIG.	REF.	QTY	DESCR.	FROM	UPTO
1	17211001	1	Body, Water Cooler [NP]		
2	13811010	1	Cap		
3	12113092	1	Plug		
4	56000061	1	Washer 10-16-1,5		
5	54102306	1	Bolt DIN 933 M10-16 INOX.		
6	56000073	1	Copper Washer 16-23-1,5		
7	12111076	1	Plug		
8	17111060	1	Plate "SOLE Diesel" [NP]		
9	17111062	2	Bolt		

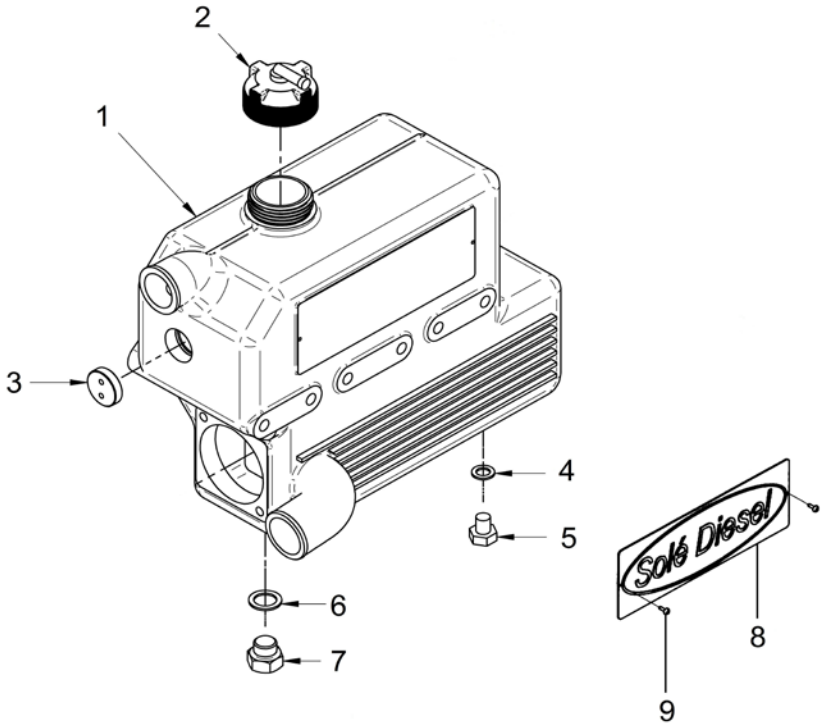

[NP] Not provided

D_MIC1_3_5			Wet Exhaust		
FIG.	REF.	QTY	DESCR.	FROM	UPTO
1	17013015	1	Elbow,wet exhaust		
2	15113043	1	Exhaust Elbow Gasket		
3	17211028	1	Water Bend		
4	13311006	4	Stud,cover		
5	53033008	4	Washer GROWER DIN 127-8		
6	52120008	4	Nut DIN 934 M8 8.8		

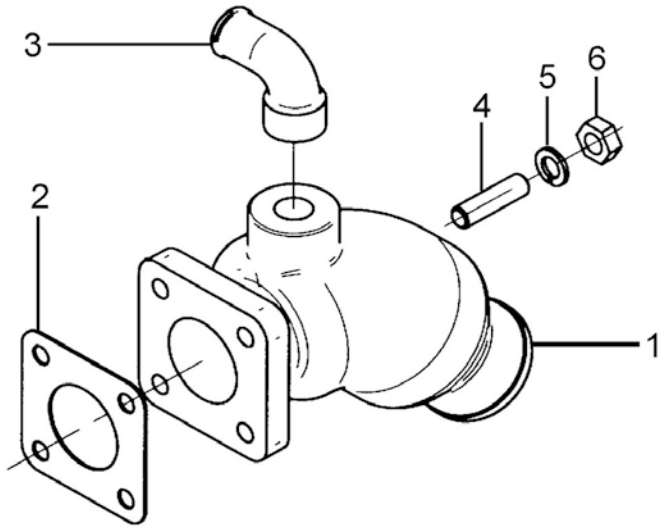

Cooling System

	33811000		1/2" Pump Water, Set		
FIG.	REF.	QTY	DESCR.	FROM	UPTO
1	54102104	6	Bolt DIN 933 M5-10 INOX.		
2	31211002	1	Cover Pump		
3	31211008	1	1/2" Impeller		
5	31211003	1	Gasket Cover		
6	55307105	1	Bolt DIN 86 W3/16-13		
7	31211005	1	Cam		
8	33411026	1	Wearplate		
9	33811010	1	Shaft,Water Pump		
10	33811015	1	Spacer		
11	53041032	1	CIRClip DIN 472 I-32		
12	33411014	2	Ball Bearing 6002-C3		
13	33411020	1	Seal		
14	33311013	1	O-Ring D. 15X2		
15	33411019	1	Seal		
17	33811001	1	Body,Water Pump		
18	33411017	1	Pin,Dowel		

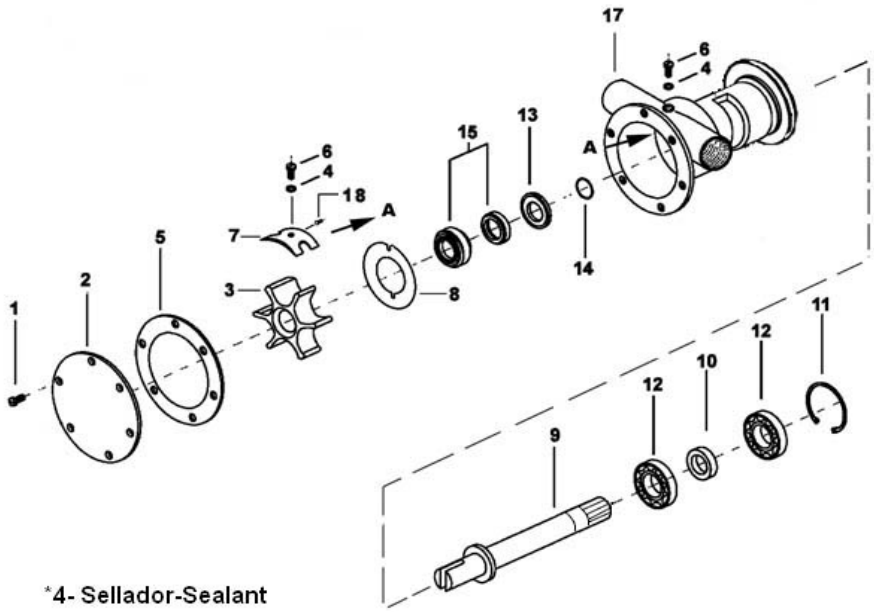

*4- Sellador-Sealant

Cooling System

	37611000		1/2" Pump Water, Set		
FIG.	**REF.**	**QTY**	**DESCR.**	**FROM**	**UPTO**
1	54102154	3	Bolt DIN 933 M6-10 INOX		
2	37611002	1	Cover Pump		
3	37611003	1	O-Ring D. 57x1,5		
4	31211008	1	1/2" Impeller		
5	37611026	1	Plate, Friction		
6	33811010	1	Shaft,Water Pump		
7	33411019	1	Seal		
8	33311013	1	O-Ring D. 15X2		
9	37611001	1	Body, Water Pump 1/2"		
10	33411020	1	Seal		
11	33411014	2	Ball Bearing 6002-C3		
12	33811015	1	Spacer		
13	53041032	1	CIRClip DIN 472 I-32		

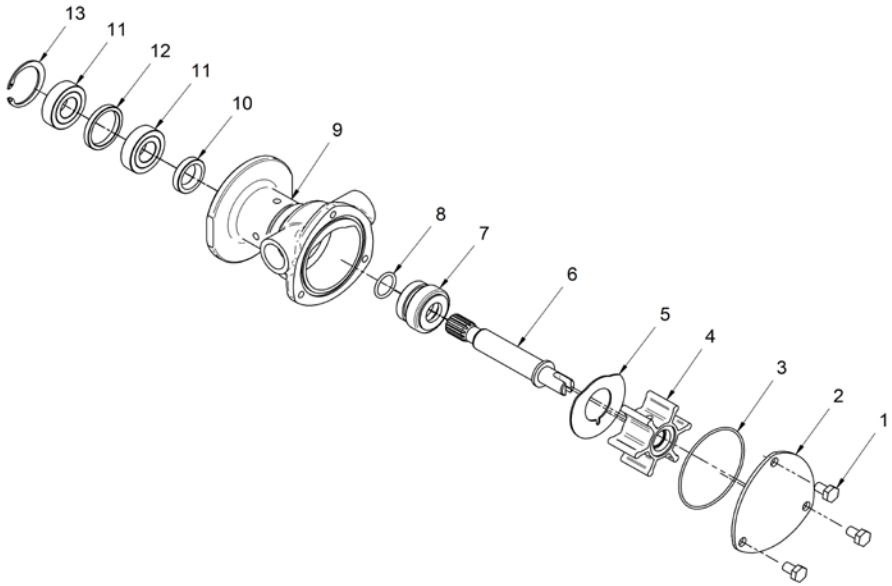

Fuel System

D_MIC1_4_1			Fuel Pipe		
FIG.	REF.	QTY	DESCR.	FROM	UPTO
1	13824013	3	Injector Washer		
2	13824025	3	Injector Gasket		
3	13824024.4	3	Nut		
4	17224015.4	1	Pipe Injection N.1		
5	17224016.4	1	Pipe Injection N.2		
6	17224019.4	1	Pipe Injection N.3		
7	13124018	2	Clamp (A)		
8	13124017	2	Clamp (B)		
9	13124019	2	Bolt		
10	17224002G	1	Pipe, Fuel Leak OFF (Generator)		
11	17224003.4	0	Shim Adjusting T=0,2MM. [VAR]		
12	17224004.4	0	Shim Adjusting T=0,3MM. [VAR]		
13	17224005.4	0	Shim Adjusting T=0,4MM. [NP] [VAR]		
14	17224006.4	0	Shim Adjusting T=0,5MM. [VAR]		
15	17224007.4	0	Shim Adjusting T=0,6MM. [VAR]		
16	17224008.4	0	Shim Adjusting T=0,7MM. [VAR]		
17	17224009.4	0	Shim Adjusting T=0,8MM. [VAR]		
18	17224010.4	0	Shim Adjusting T=0,9MM. [VAR]		
19	17224011.4	0	Shim Adjusting T=1,0MM. [NP] [VAR]		
20	17220059.4	4	Bolt		

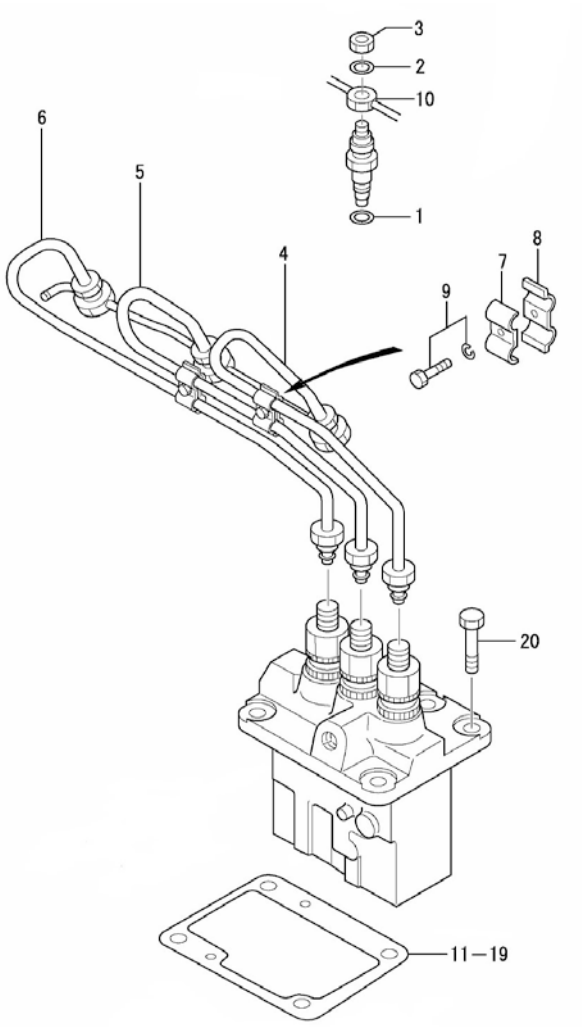

[NP] Not provided

[VAR] Variable according to repair

D_MIC1_4_2			Injection Nozzle		
FIG.	REF.	QTY	DESCR.	FROM	UPTO
1	13826001	3	Nozzle & Holder A		
1A	13826002	3	Body Assy		
1BA	13826010	0	Washer 1,25 [VAR]		
1BB	13826011	0	Washer 1,30 [VAR]		
1BC	13826012	0	Washer 1,35 [VAR]		
1BD	13826013	0	Washer 1,40 [VAR]		
1BE	13826014	0	Washer 1,45 [VAR]		
1BF	13826015	0	Washer 1,50 [VAR]		
1BG	13826016	0	Washer 1,55 [VAR]		
1BH	13826017	0	Washer 1,60 [VAR]		
1BI	13826019	0	Washer 1,65 [VAR]		
1BJ	13826020	0	Washer 1,70 [VAR]		
1C	17226004	3	Spring, Pressure		
1D	13826003	3	Pin Pressure		
1E	13826007	3	PIECE DISTANCE		
1F	13826018	3	Nozzle Assy		
1G	17226006	3	Nut, Nozzle RETAINING		

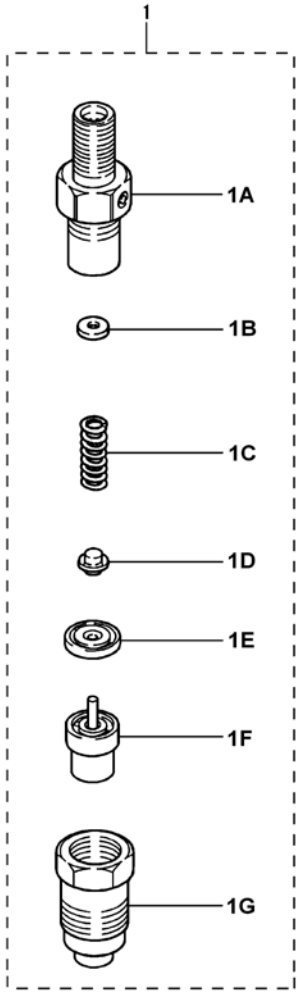

[VAR] Variable according to repair

D_MIC1_4_3			Fuel Injection Pump		
FIG.	REF.	QTY	DESCR.	FROM	UPTO
1	17225005	1	Housing SUB Assy [NP]		
2	17325004.1	3	Holder,DELIVERY		
3	17325002.1	3	Spring,DELIVERY		
4	13125007	3	Gasket DELIVERY V		
5	17225008G	3	Valve SUB-Assy (Generator)		
6	17225009.1	3	Element SUB Assy		
7	13125010	3	SLEEVE		
8	17225011.1	3	Seat		
9	17225011G	3	Spring, Plunger		
0	17225001.1	1	Pump Assy,Fuel Injection		
10	13125021	3	Tappet SUB Assy		
11	17225006	1	RACK Assy, Control		
12	13125013	3	Seat Spring LOWER		
13	17325033.1	3	O-Ring		
14	17225022G	3	Pin, Tappet		
15	17225023G	1	Plate		
16	17225030G	2	Plate, ADJUNSTING		
17	17225028	2	Bolt, With Washer		
18	13125026	1	Screw Air BRETATH		
19	13125027	1	Screw HOLLOW		
20	17225025	1	Washer, Pipe Union		
21A	13125014	0	Shim T=0.60 [VAR]		
21B	13125015	0	Shim T=0.20 [VAR]		
21C	13325249	0	Shim T=0.30 [VAR]		
21D	13125017	0	Shim T=0.40 [VAR]		
21E	13125018	0	Shim T=0.50 [VAR]		
21F	13125019	0	Shim T=0.25 [VAR]		
21G	13125020	0	Shim T=0.35 [VAR]		
21H	17225018	0	Shim T=0.45 [VAR]		
21I	17225019	0	Shim T=0.55 [VAR]		
21J	17225020	0	Shim T=0.65 [VAR]		
22	13124001	2	Washer		
23	17225029.3	1	NIPPLE SWIVEL		

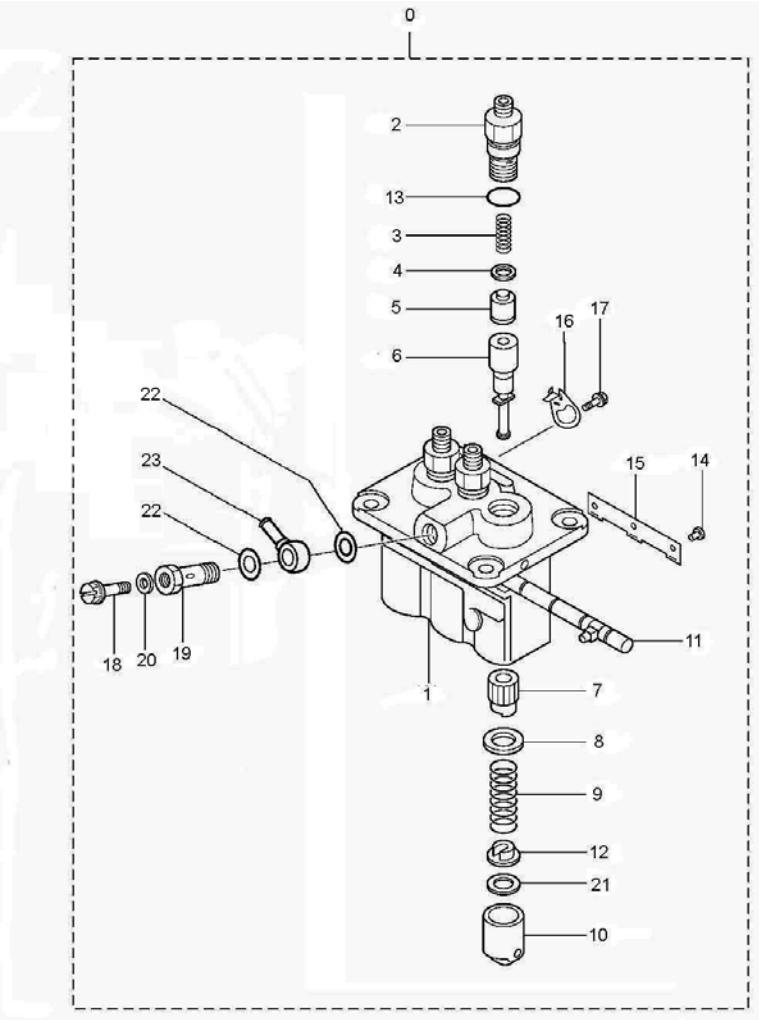

[NP] Not provided

[VAR] Variable according to repair

D_MIC1_4_4			Governor Parts		
FIG.	REF.	QTY	DESCR.	FROM	UPTO
1	17223000.4	1	Case Assy, Governor		
1A	17223009	1	Pin, Spring		
1B	17223046	1	O-Ring D. 10X2,5		
1C	13123009	1	Pin GROOVED		
1D	17223032	2	Nut		
1E	17223030	1	Nut		
1F	53033008	1	Washer GROWER DIN 127-8		
1G	17223035	1	Nut		
1H	13823034	1	RACK Set Screw (new)		
1I	17223017.4	1	Bolt		
1J	17223048.4	1	Lever TIE-ROD		
1K	17223049	1	Spring TIE-ROD		
1L	17223036	1	Cover, Governor		
1M	17223006	1	Shaft, GOverNOR		
1N	17223003	1	Lever, Governor		
1O	17223044	1	Spring, GOverNOR		
1P	17223028	1	Spring		
1Q	17223025	1	Bolt Low Idle Set		
1R	(*)	1	Not available [NP]		
1RA	17223029	1	Lever Assy		
1RB	13220034	1	Roller Bearings		
1S	17223019.4	1	Case, Governor		
1T	17223007.4	1	Lever, Governor		
1U	17223008.4	1	Lever, SPEED		
1V	17223047	1	Shim, Governor Shaft [NP]		
2	17223033.4	1	Gasket, Governor Case		
3	17223050	1	Shaft, SLIDING SLEEVE		
4	17223031	1	SLEEVE, SLIDING		
5	17223001	1	WEIGHT Assy, GOverNOR		
6	17220034.4	3	Bolt		
7	17223052.4	1	Bolt, Governor Case		
8	17223043.4	1	Cover TIE-ROD		
9	13223014	1	Gasket Cover		
10A	52102256	4	Bolt DIN 933 M8-15 8.8		
10B	53033006	4	Washer GROWER DIN 127-6		

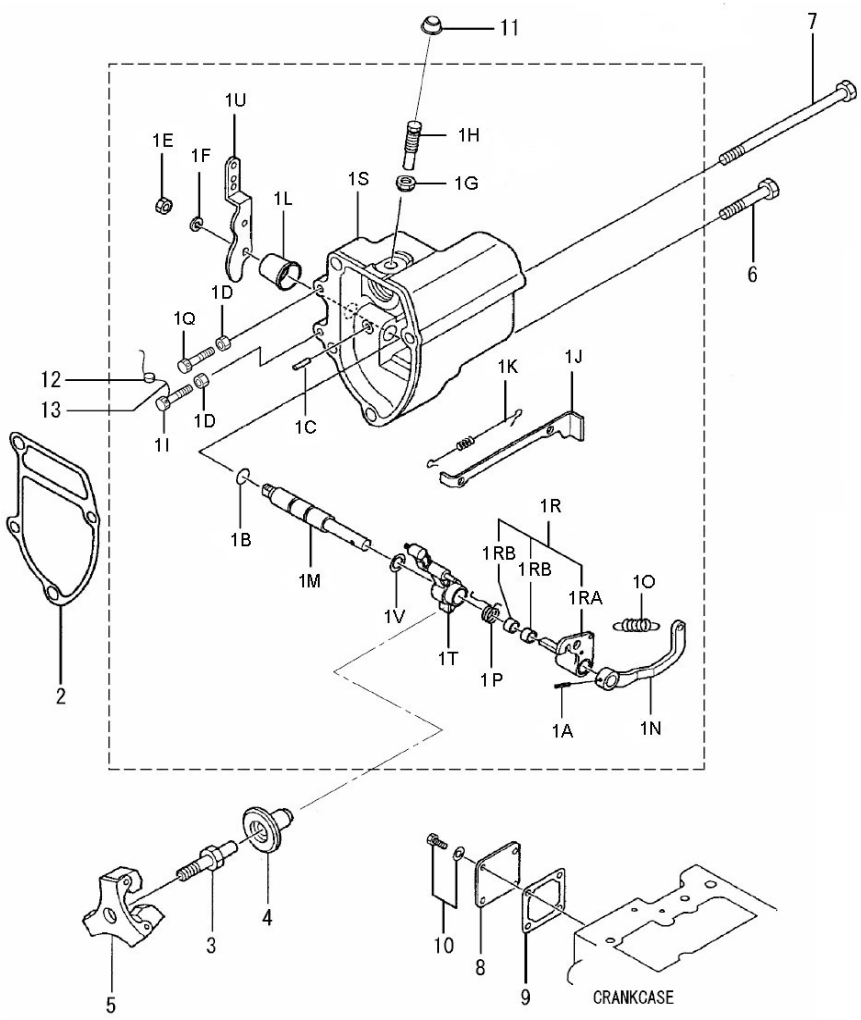

[NP] Not provided

D_MIC1_4_4			Governor Parts		
FIG.	REF.	QTY	DESCR.	FROM	UPTO
11	13823042	1	Cap TORQUE Set SE		
12	17623020.4	1	Metal,Fuel	02/08/2017	
12	13123020	1	Metal,Fuel [NP]		02/08/2017
13	13123019	1	Metal Sealing		

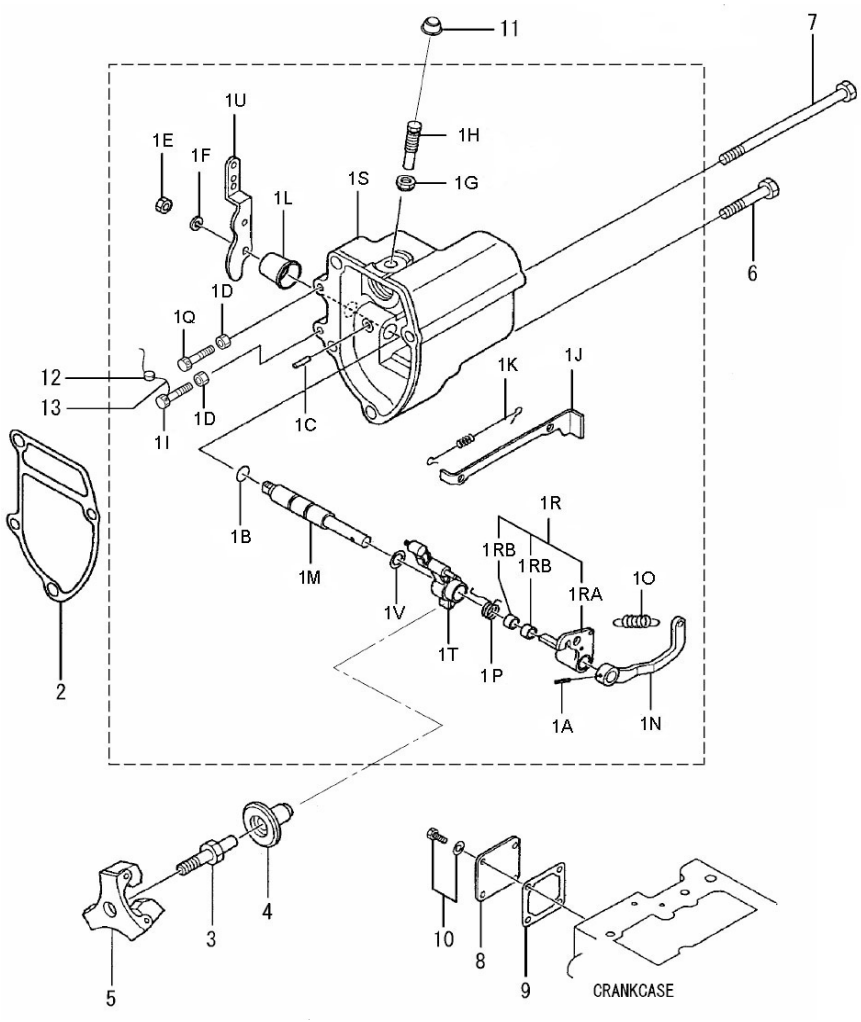

Fuel System

D_MIC1_4_5			Fuel Supply Parts		
FIG.	REF.	QTY	DESCR.	FROM	UPTO
1	17614027	1	Hose		
2	51086016	1	ONE EAR Clamp With INTERIOR Ring		
3	51086012	3	ONE EAR Clamp With INTERIOR Ring		
4	17214027	1	0,39 M. Hose		
5	17614026	1	0,04 M. Hose		
6	17614028	1	Bypass "T"		
6	13114003	1	Pipe Inlet [NP]		
7	57000369	4	Washer 14,2-20-1,5		
8	12814051	2	Screw,eye		
9	13114022	1	Gas-Oil Filter Element		
10	52102257	2	Bolt DIN 933 M8-20 8.8		
11	53038008	2	Washer DIN 6798-A 8		
12	17214001	1	Bracket, Gas-Oil Filter		
13	13114020	1	Cover,filter		
14	51031008	2	Washer DIN 9021 8		
15	52102258	2	Bolt DIN 933 M8-25 8.8		

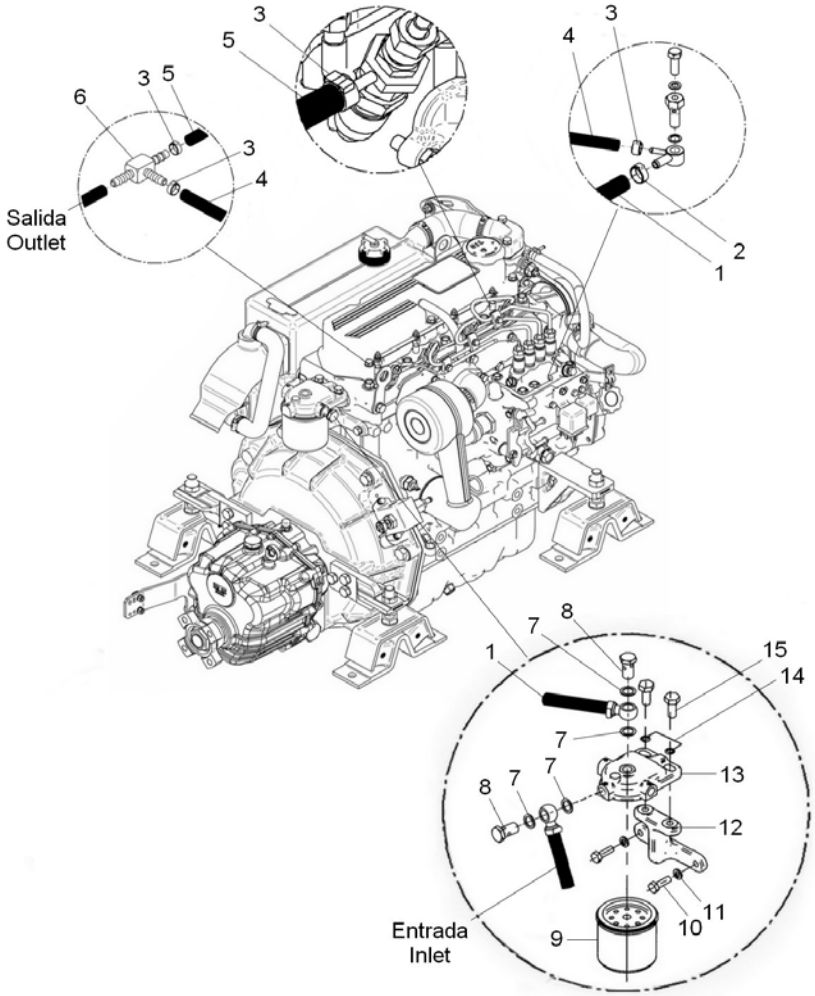

[NP] Not provided

Electrical System

	17217055		Kit Alternator 14V.95A.		
FIG.	**REF.**	**QTY**	**DESCR.**	**FROM**	**UPTO**
1	17117025	1	Alt. 14V/95A Mahle	13/04/2016	
2	17227007.4	1	Plate		
3	13817012.7	1	Pulley		
4	13817017	1	Spacer 17X28X5,5	09/09/2015	
5	13817016	1	Spacer 17X28X4		
6	51031008	1	Washer DIN 9021 8		
7	52102258	1	Bolt DIN 933 M8-25 8.8	31/07/2017	
7	52102259	1	Bolt DIN 933 M8-30 8.8		30/07/2017
8	52101325	1	Bolt DIN 931 M10-120 8.8		
9	53038010	1	Washer DIN 6798-A 10		
10	17417025	1	Spacer 13.5x10.2x11	09/09/2015	
11	17217006	1	Spacer 10,5X25X32		
12	51030008	1	Washer DIN 125-8		
13	53033008	1	Washer GROWER DIN 127-8		30/07/2017
14	52120008	2	Nut DIN 934 M8 8.8		
15	TFM.6.3.T.5.I	1	Straight Receptacle 6.3 Faston		
16	51030005	1	Washer DIN 125-5		
17	52120005	1	Nut DIN 934 M5 8.8		
18	TR.10.8	1	Ring Terminal 10 Sec.		
19	17021028	1	Belt Type SPZX 987		
20	53038008	1	Washer DIN 6798-A 8	31/07/2017	

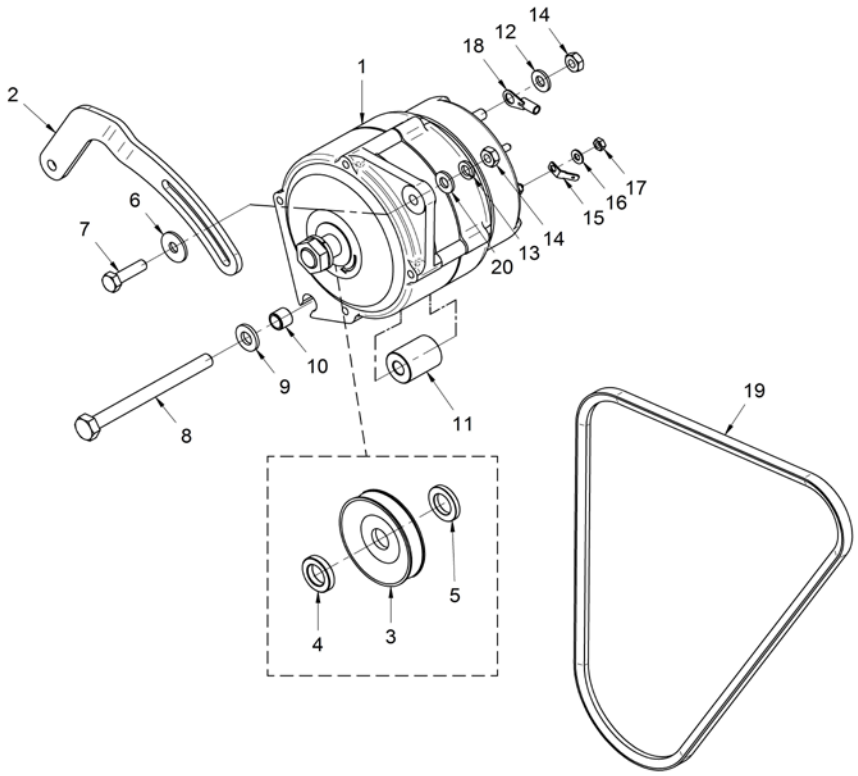

D_MIC1_5_3			Starter Assy		
FIG.	REF.	QTY	DESCR.	FROM	UPTO
1	17227001	1	Starter Assy 12 V [NP]		
2	52202308	2	Bolt DIN 933 M10-1,25-25 8.8		
3	53033010	2	Washer GROWER DIN 127-10		

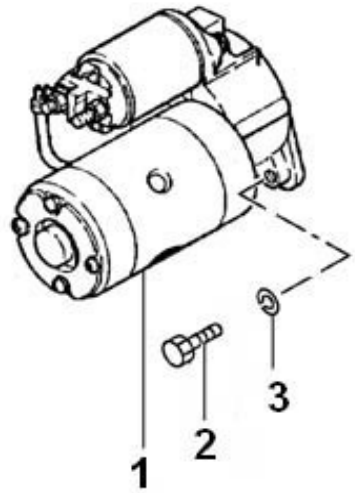

[NP] Not provided

Electrical System

D_MIC1_5_5			Electrical Wiring		
FIG.	REF.	QTY	DESCR.	FROM	UPTO
1	60972125.2	1	Panel TE2 MINI-33/44/55		
2	60938005	1	Panel N.2		
3	60900121	1	FuseHolder, panel		
4	60900118	1	Fuse 10 A.		
5	60900036	1	Key,Starter Switch		
6	60900038	1	Cover,KEY		
7	60900037	1	Key-Locking		
8	60972910	1	TACHOMETER MINI-33/44		
9	60900301.2	1	Integrated Circuit Plate 12V Protection	23/06/2015	
10	60900119	1	Fuse 0.5A		
12	60900929	2	Bulb 12V		
13	60900915R	1	Water Gauge 12 V		
14	60938006	1	Gasket Panel		
15	13827005	1	Glow Relay		
16	13817005	1	Relay 6V		
17	52102154	2	Bolt DIN 933 M6-10 8.8		
18	51030006	2	Washer DIN 125-6		
19	52102104	1	Bolt DIN 933 M5-10 8.8		
20	51030005	1	Washer DIN 125-5		
21	60938210.1	1	Engine Wiring Ext. 3 M. SUPERSEAL		
22	60972200R.3	1	Wiring,Electrical MINI-33/44/55 3 V.		
23	17227018.4	1	Plate		
24	17227017.4	3	Plug, glow [NP]		
25	17224025.4	1	Solenoid ETS		
26A	17225029.4	1	Nut		
26B	17023030	1	Cap GUM		
27	60934040	1	WIRINE		
28	52202361	1	Bolt DIN 933 M12-1,25-40 8.8		
29	53033012	1	Washer GROWER DIN 127-12		
30	15217010	1	Bracket,wirings		

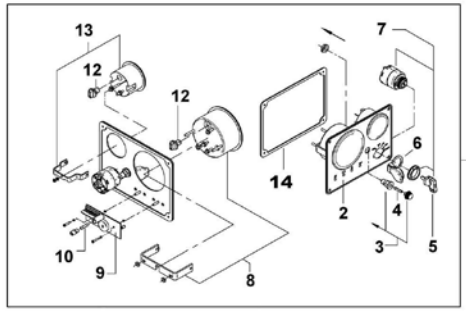

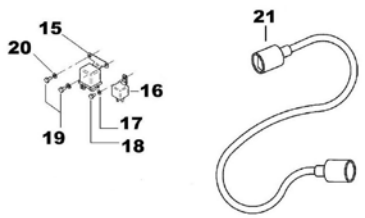

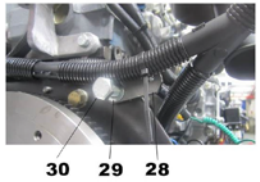

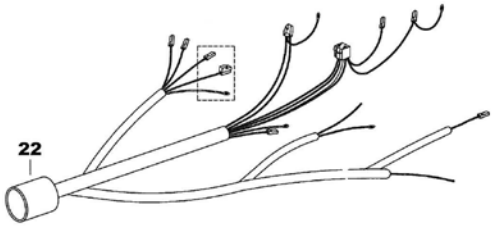

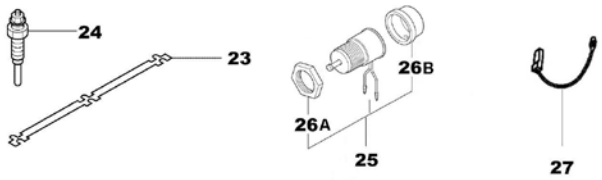

[NP] Not provided

D_MIC1_5_6			Deluxe Instrument Panel		
FIG.	REF.	QTY	DESCR.	FROM	UPTO
1	60972127.2	1	SVT 30 MINI-33/44/55 Panel (Repl.) [NP]		
3	60900929	4	Bulb 12V		
4	60900925R	1	VOLTMETER 12 V		
5	60972910	1	TACHOMETER MINI-33/44		
6	60900920R	1	Oil Pressure Gauge 12 V		
7	54108003	1	Bolt DIN 84 M3-8 INOX.		
8	60900119	1	Fuse 0.5A		
9	60900301.2	1	Integrated Circuit Plate 12V Protection	23/06/2015	
10	60900915R	1	Water Gauge 12 V		
11	60990006	1	Gasket Panel		
12	60900037	1	Key-Locking		
13	60900038	1	Cover,KEY		
14	60990005	1	Panel N.3		
15	60900121	1	FuseHolder, panel		
16	60900118	1	Fuse 10 A.		
17	60900036	1	Key,Starter Switch		

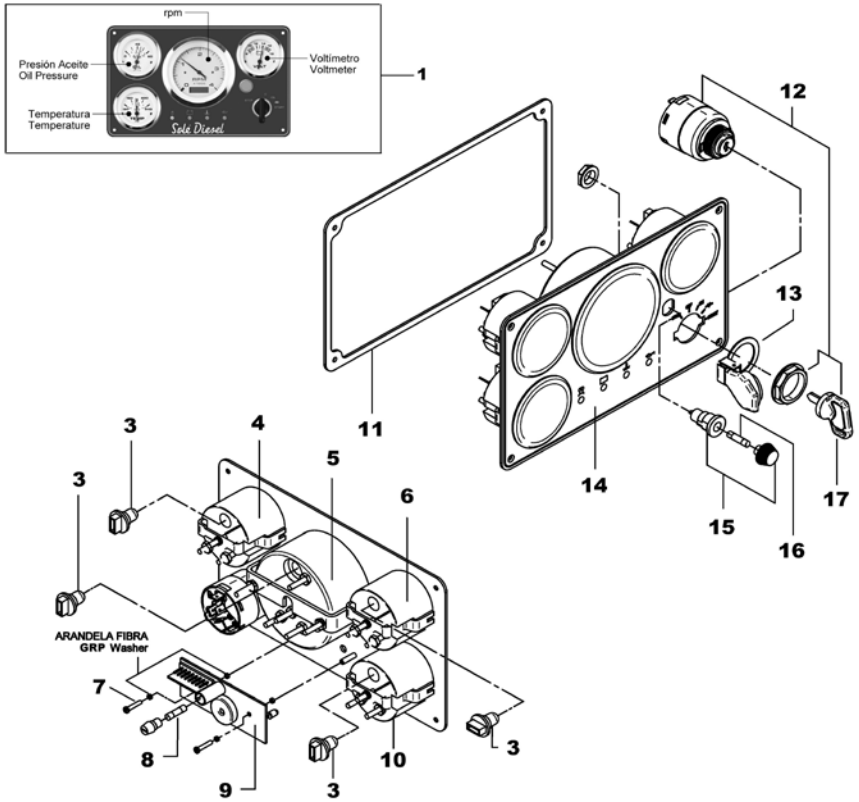

[NP] Not provided

D_60972130			SVT 20 MINI-33/44/55 Panel		
FIG.	REF.	QTY	DESCR.	FROM	UPTO
1	60938005.1	1	Panel N.2		
2	60900301.2	1	Integrated Circuit Plate 12V Protection		
3	54108003	2	Bolt DIN 84 M3-8 INOX.		
4	60900910.1	1	MTG Bracket 3" LG GA AMEGA		
5	60900910.2	3	Nut 8-32 W/CapTIVE STAR Washer		
6	60900037.2	1	Connector		
7	60900915.2	1	MTG Bracket		
8	60900037	1	Key-Locking		
9	60900931	2	SOCKET,WEDGE BASE		
10	60900929	2	Bulb 12V		
11	60900937	1	Water Gauge 12 V		
12	60972912	1	Tachometer MINI-33/44 SVT		
13	60900096	1	Cover Plate for Motor Propeller		
14	60938006.1	1	Gasket Panel		
NS	60900091	1	MICRO Relay 12V 12-20 [NS]		
NS	60910012	1	System Back Panel SVT/MVT 20 12V [NS]	07/12/2016	

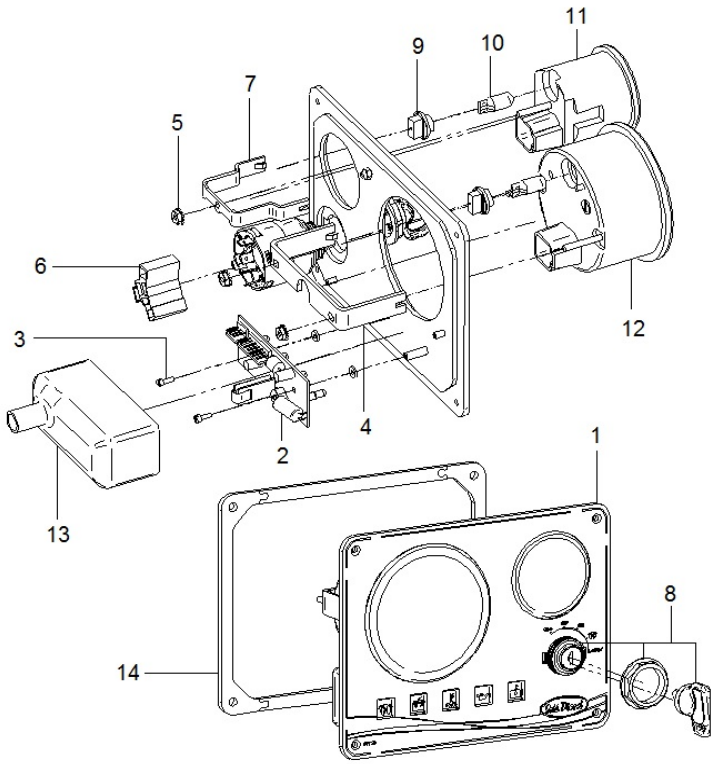

[NS] Not shown

D_60972132			SVT 30 MINI-33/44/55 Panel		
FIG.	REF.	QTY	DESCR.	FROM	UPTO
1	54108003	2	Bolt DIN 84 M3-8 INOX.		
2	60900037	1	Key-Locking		
3	60900037.2	1	Connector		
4	60900910.2	5	Nut 8-32 W/CapTIVE STAR Washer		
5	60900931	4	SOCKET,WEDGE BASE		
6	60900929	4	Bulb 12V		
7	60990005.1	1	Panel N.3		
8	60990006.1	1	Gasket Panel		
9	60900096	1	Cover Plate for Motor Propeller		
10	60900301.2	1	Integrated Circuit Plate 12V Protection		
11	60900910.1	1	MTG Bracket 3" LG GA AMEGA		
12	60900915.2	3	MTG Bracket		
13	60900941	1	VOLTMETER 12V		
14	60972912	1	Tachometer MINI-33/44 SVT		
15	60900937	1	Water Gauge 12 V		
16	60900939	1	Oil Pressure Gauge 12V		
NS	60900091	1	MICRO Relay 12V 12-20 [NS]		
NS	60910014	1	System Back Panel SVT/MVT 30 12V [NS]	07/12/2016	

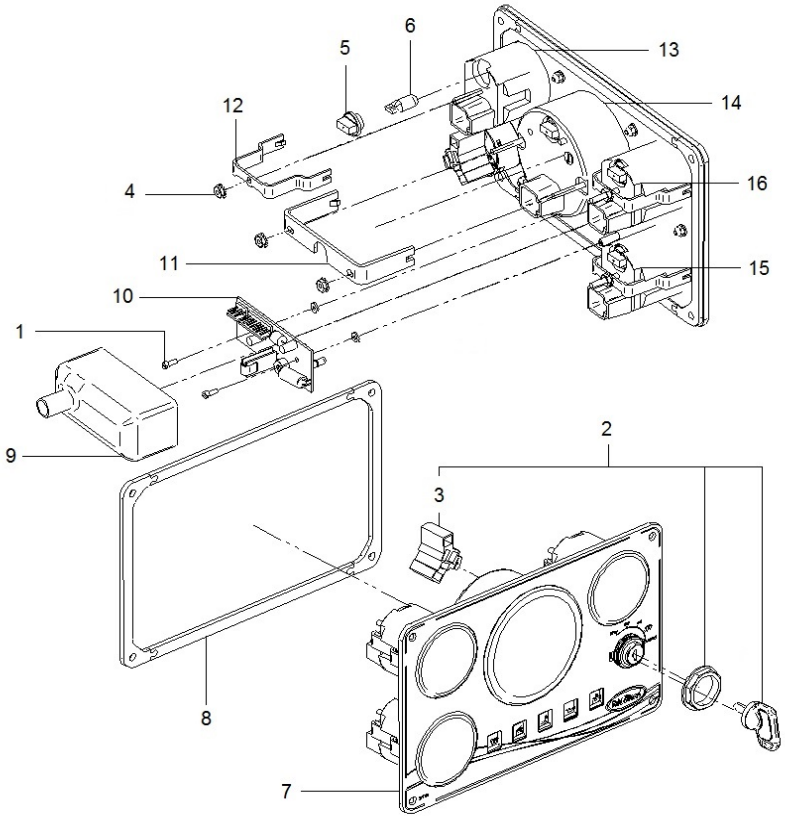

[NS] Not shown

Maintenance Kit

D_17220101.4			Gasket Kit		
FIG.	REF.	QTY	DESCR.	FROM	UPTO
1	17221010	1	Gasket, Rocker Cover		
2	17221035	1	Gasket, Exhaust Manifold		
3	17221004	1	Gasket, Cylinder Head		
4	17221032	1	Gasket, Inlet Cover		
5	17221034	1	Gasket, Inlet Pipe		
6	13811007	2	O-Ring D. 57X2,5		
7	15113043	1	Exhaust Elbow Gasket		
8	17011007	1	O-Ring D. 57X3		
9	31211003	1	Gasket Cover		
10	17220018.4	1	Gasket, Front Plate		
11	17223033.4	1	Gasket, Governor Case		
12	13223014	1	Gasket Cover		
13	17221022.4	1	Gasket Water Pump		
14	13221041	1	Gasket Water Pump		
15	17224041	1	Packing, Body		
16	17220002	4	Seal, Side		
17	17424063	1	Gasket		
18	17220016	1	Gasket, Oil Seal Case		
19	17221031	1	Gasket,Thermostat		
20	17221033.4	1	Gasket, Thermostat Case		
21	17220063	1	Seal, Oil		
22	13824025	4	Injector Gasket		
23	13824013	4	Injector Washer		
24	13222054	8	Seal Valve Stem		
25	13120047	3	Gasket Water Pump		
26	17220040	1	Gasket, Gear Case		
27	17220038	1	Gasket, Housing		
28	17024001	1	Gasket		
NS	33311013	1	O-Ring D. 15X2 [NS]		

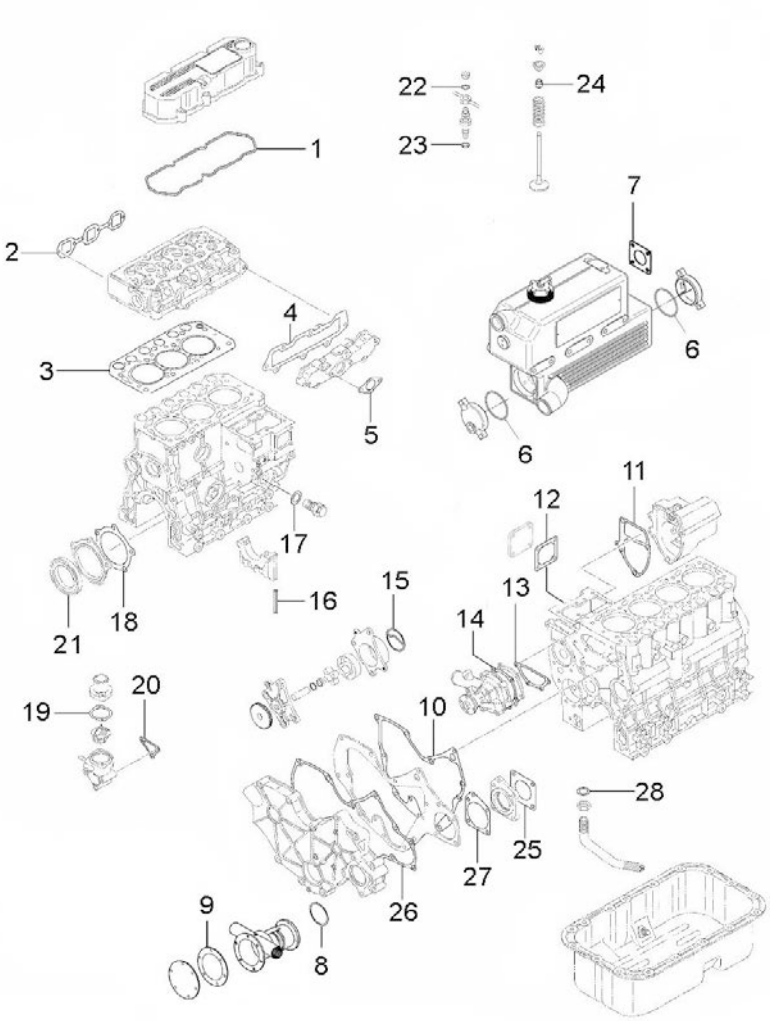

[NS] Not shown

Maintenance Kit

17211100.4			Pipe Rubber Set, Water Line		
FIG.	**REF.**	**QTY**	**DESCR.**	**FROM**	**UPTO**
1	17011012	1	Elbow		
2	17211006	1	Hose		
3	17211021	1	Elbow		
4	17211034	1	Rubber WET Exhaust Inlet BEND		

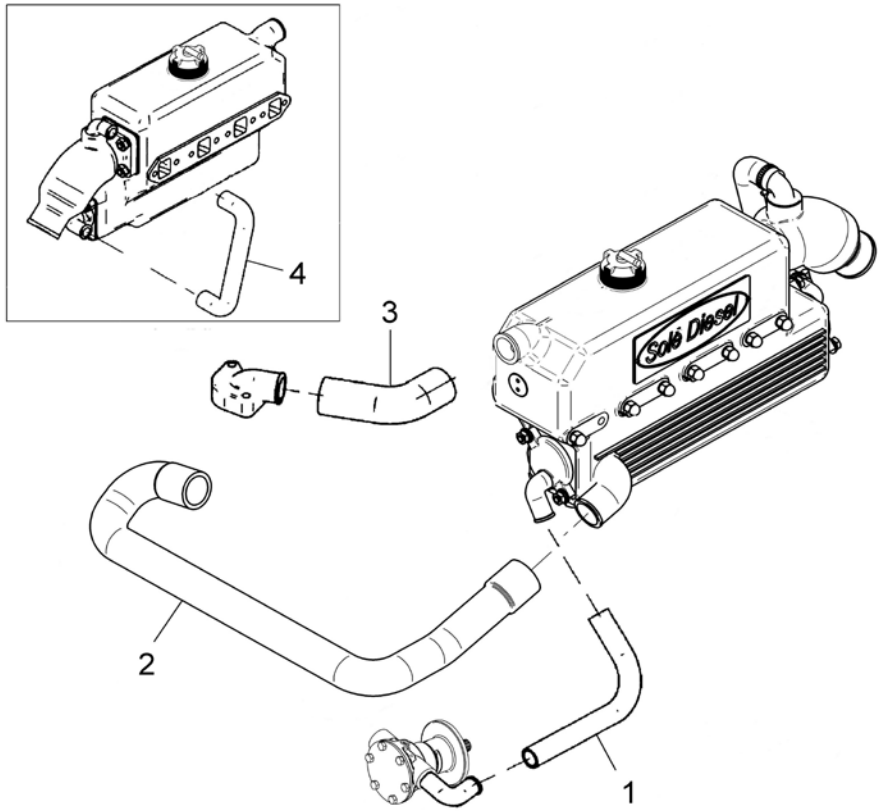

Maintenance Kit

	33811000K		Repair Kit Water Pump 1/2"		
FIG.	REF.	QTY	DESCR.	FROM	UPTO
1	31211008	1	1/2" Impeller		
2	31211003	1	Gasket Cover		
3	33411020	1	Seal		
4	33411019	1	Seal		
5	33311013	1	O-Ring D. 15X2		
NS	17011007	1	O-Ring D. 57X3 [NS]		

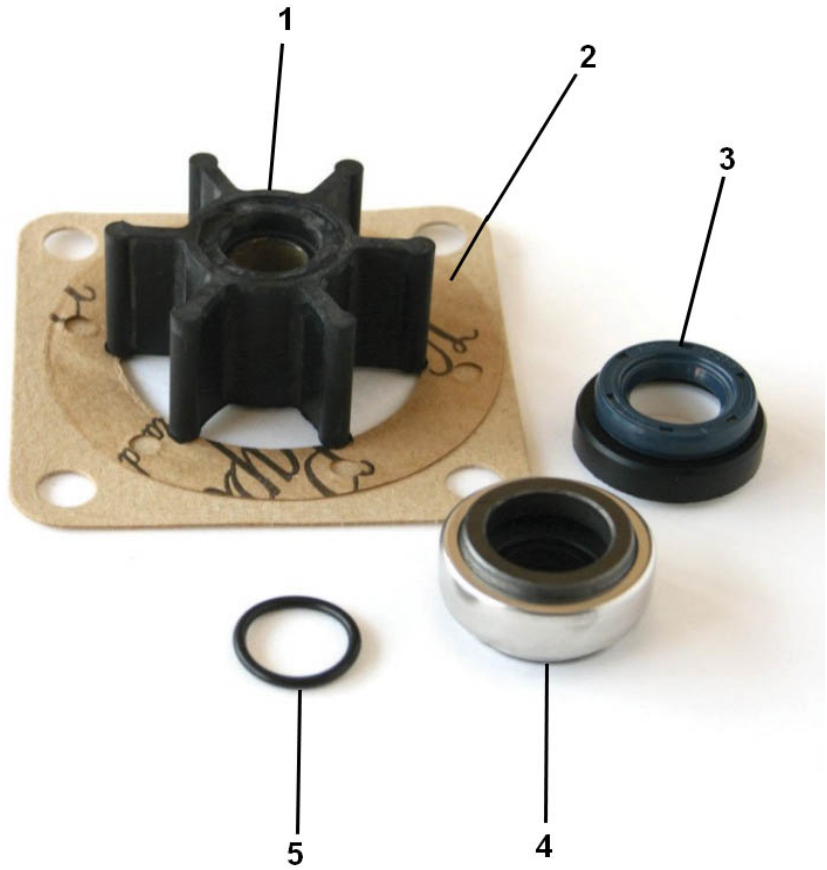

[NS] Not shown

Maintenance Kit

	37611000K		Repair Kit Water Pump 1/2"		
FIG.	REF.	QTY	DESCR.	FROM	UPTO
1	31211008	1	1/2" Impeller		
2	37611003	1	O-Ring D. 57x1,5		
3	33411020	1	Seal		
4	33411019	1	Seal		
5	33311013	1	O-Ring D. 15X2		
NS	17011007	1	O-Ring D. 57X3 [NS]		

[NS] Not shown

Gearbox TMC-40P

	D_5033_1		Sheet 1/2		
FIG.	**REF.**	**QTY**	**DESCR.**	**FROM**	**UPTO**
1	24860002P	1	Box		
2	24860208	1	Gear Ratio 3:1		
4	24860001P	1	Cover		
6	24860076	2	Shim		
7	24860307	1	Washer		
8	24860217	4	Spacer		
9	24860304	1	Spacer		
11	24863101	1	Input Shaft		
11	24864101	1	INPUT Shaft		
12	24860201	1	Output		
14	24860301	1	INTERMEDIATE Shaft		
19	24860222	2	Nut		
20	24810065	1	Plug		
22	24860202	1	Clutch		
23	24860302	1	Gear		
24	24860210	1	Gear		
25	24863203	1	Gear R.2,00		
25	24864203	1	Gear R.2,60		
26	24860224	1	Flange Output		
27	24860008P	1	Gauge		
29	24860205	2	CAGE		
31	24830011	1	Plug		
33	24860103	2	Oil Seal		
35	24860204	2	Bearing, needle		
36	24860306	2	Bearing, needle		
37	24860104	1	Ball Bearing 6304		
38	24860105	1	Bearing		
39	24810063	1	Plane Washer		
40	56000081	1	Washer 20-26-1,5		
43	24860092	8	Washer		
44	24850093	4	Washer		
46	24860023	2	Pin		
47	52102158	8	Bolt DIN 933 M6-25 8.8		
50	52105258	1	Bolt DIN 7991 M8-25 10.9		
51	52103259	4	Bolt DIN 912 M8-30 8.8		

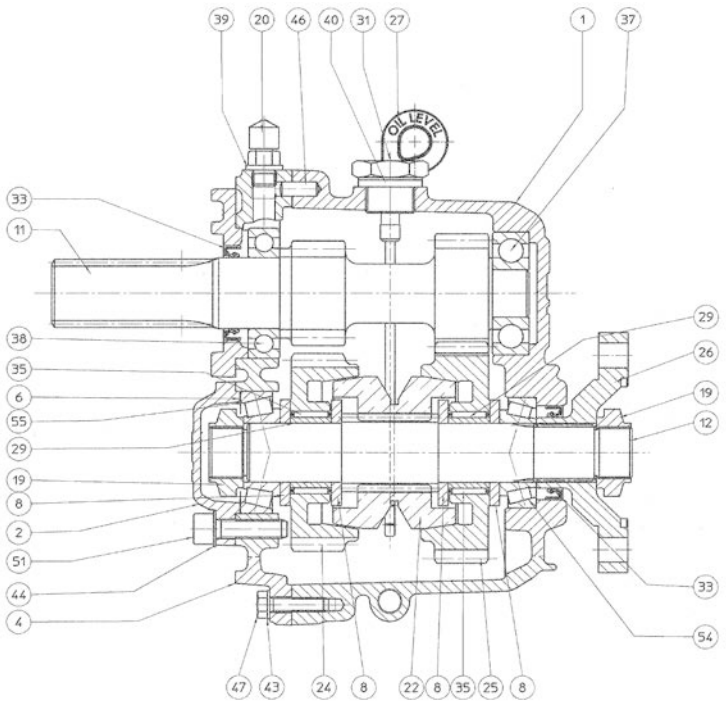

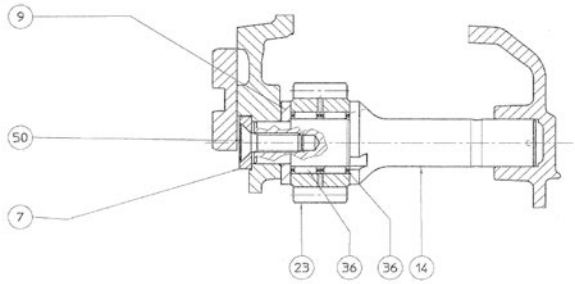

[NS] Not shown

Gearbox TMC-40P

D_5033_1			Sheet 1/2		
FIG.	REF.	QTY	DESCR.	FROM	UPTO
54	24860206	1	Conical Roller Bearing 32005		
55	24860207	1	Conical Roller Bearing 30205A		
NS	24860450	1	Kit GasketS [NS]		

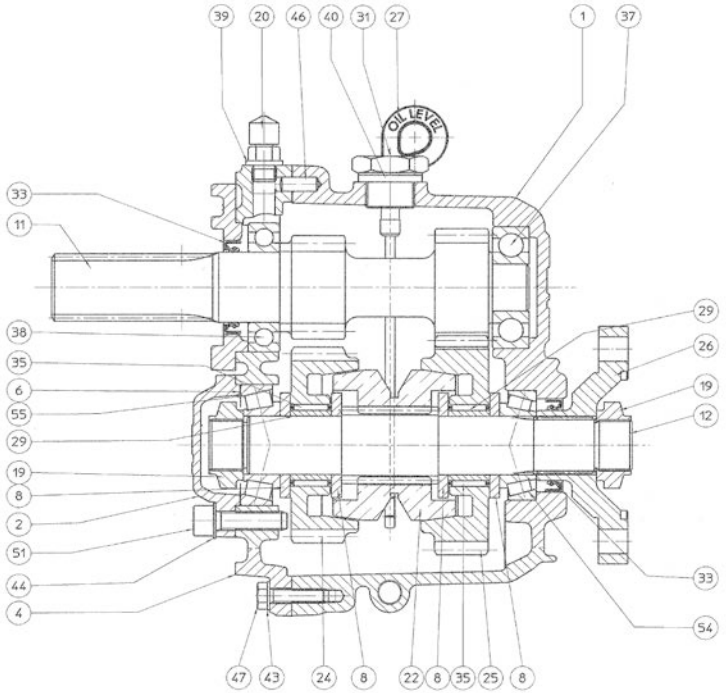

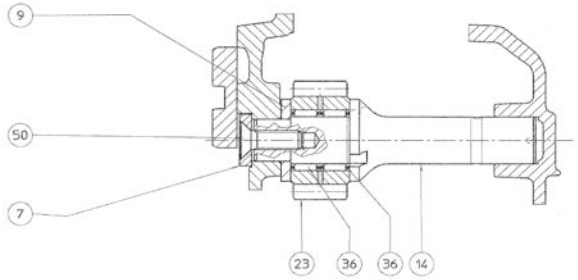

Gearbox TMC-40P

D_5033_2			Sheet 2/2		
FIG.	REF.	QTY	DESCR.	FROM	UPTO
3	24860401	1	Cover		
5	24860003P	1	Cover		
10	24860411	1	Spring		
13	24860402	1	Shaft		
15	24850005	1	Plate, IDENTIFICATION		
16	24860006	1	ATF Oil Plate		
17	24860419	1	Pin		
18	24810424	1	Lever		
21	24860423	1	PAD		
28	24860409	1	Screw		
30	24850011	1	Plug,oil drain		
32	24860404	1	Oil Seal		
34	24860417	1	O-Ring		
39	24810063	1	Plane Washer		
41	24810530	2	Washer DIN 125-8 [NP]		
42	24810014	2	Washer GROWER DIN 127-8 [NP]		
45	53052210	1	Pin DIN 1481 3-20		
48	52103157	6	Bolt DIN 912 M6-20 8.8		
49	52102258	1	Bolt DIN 933 M8-25 8.8		
52	24860011P	2	Stud		
53	24860071	2	STUD		
56	24810515	2	Nut DIN 934 M8 8.8 [NP]		
57	51123008	1	Nut DIN 985 M8 5.6		

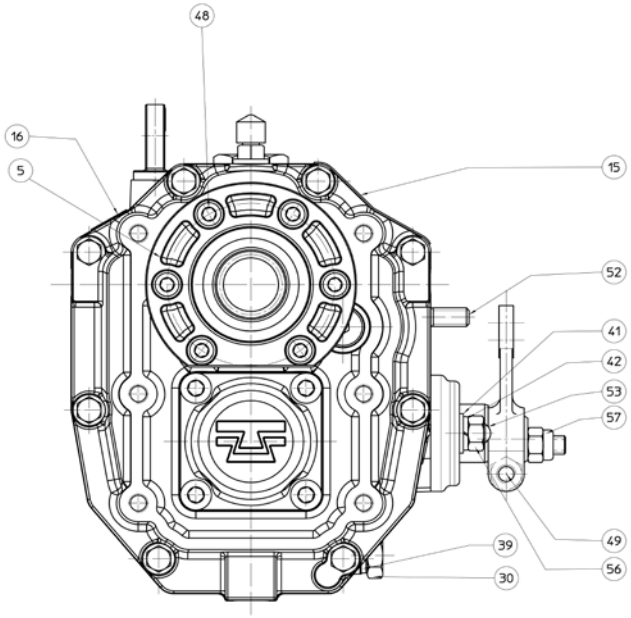

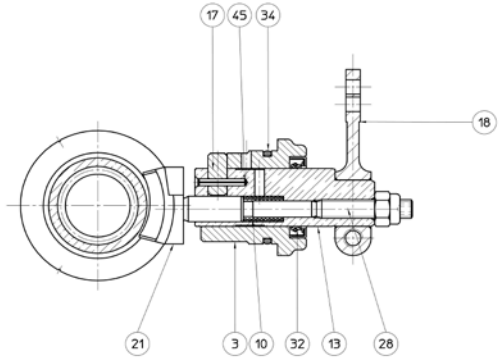

[NP] Not provided

Gearbox TMC-40P

D_5033_3			Maintenance Kit		
FIG.	REF.	QTY	DESCR.	FROM	UPTO
1	24860450	1	Kit GasketS		
2	A0201000	2	ATF Sole Diesel Oil 1L		

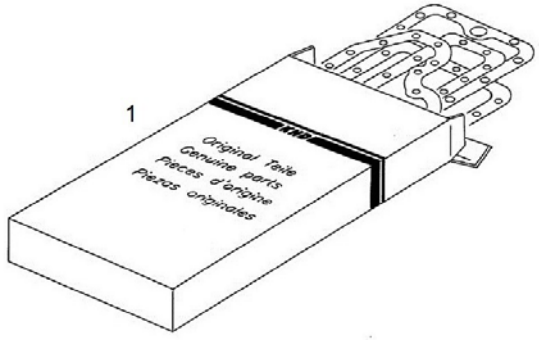

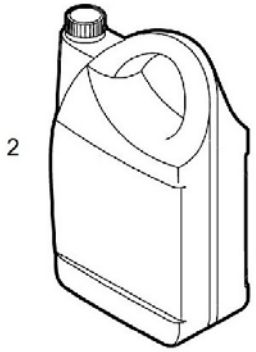

Gearbox TMC-60P

D_5036_1			Sheet 1/2		
FIG.	REF.	QTY	DESCR.	FROM	UPTO
2	24880401	1	Cover		
8	24880306	1	Washer		
9	24860411	1	Spring		
10	24880402	1	Shaft		
14	24850005	1	Plate, IDENTIFICATION		
15	24860006	1	ATF Oil Plate		
16	24860419	1	Pin		
17	24810424	1	Lever		
21	24880311	1	Plug		
22	24880038	2	Plug		
23	24880423	1	Pad		
29	24860008P	1	Gauge		
31	24880409	1	Screw		
33	24850011	1	Plug,oil drain		
36	24860404	1	Oil Seal		
39	24860417	1	O-Ring		
44	24810530	2	Washer DIN 125-8 [NP]		
46	24810014	3	Washer GROWER DIN 127-8 [NP]		
49	24860418	1	Pin DIN 1481 3-20 [NP]		
51	24810047	8	Bolt DIN 933 M8-25 8.8 [NP]		
52	52103258	2	Bolt DIN 912 M8-25 8.8		
53	52101263	2	Bolt DIN 931 M8-50 8.8		
54	24860071	2	STUD		
57	24810515	2	Nut DIN 934 M8 8.8 [NP]		
59	51123008	1	Nut DIN 985 M8 5.6		

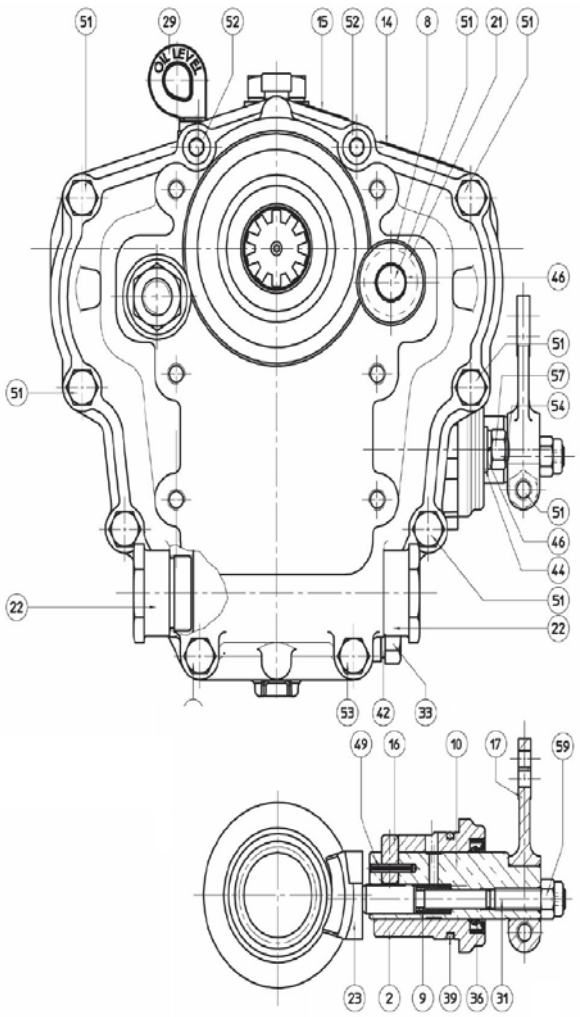

[NP] Not provided

Gearbox TMC-60P

	D_5036_2		Sheet 2/2		
FIG.	**REF.**	**QTY**	**DESCR.**	**FROM**	**UPTO**
1	24880002P	1	Box		
3	24880001	1	Cover		
4	24880305	2	Spacer		
5	24813500.67	6	Spacer		
6	24880218	2	Shim		
7	24880217	2	Shim		
11	24880301	1	INTERMEDIATE Shaft		
12	24880201	1	Shaft Output		
13A	24882101P	1	Input Shaft		
13B	24883101P	1	Input Shaft		
13C	24884101	1	Input Shaft		
13D	24885101P	1	Input Shaft		
18	24850099	1	Nut		
19	24880222	1	Nut		
20	24810065	1	Plug		
24	24880202	1	Clutch		
25A	24882203	1	Gear		
25B	24882203	1	Gear		
25C	24884203	1	Gear		
25D	24884203	1	Gear		
26A	24882203	1	Gear		
26B	24883210	1	Gear		
26C	24884210	1	Gear		
26D	24885210	1	Gear		
27	24880302	1	Gear		
28	24880224	1	Flange Output		
30	24880310	1	Nut		
32	24880205	2	CAGE		
34	24830011	1	Plug		
35	24880309	1	Ring		
37	24880103A	1	Seal,oil BA 30-47-7 [NP]		
38	24890214	1	Oil Seal		
40	24880204	2	Bearing, needle		
41	24880308	1	Washer		
42	24810063	2	Plane Washer		

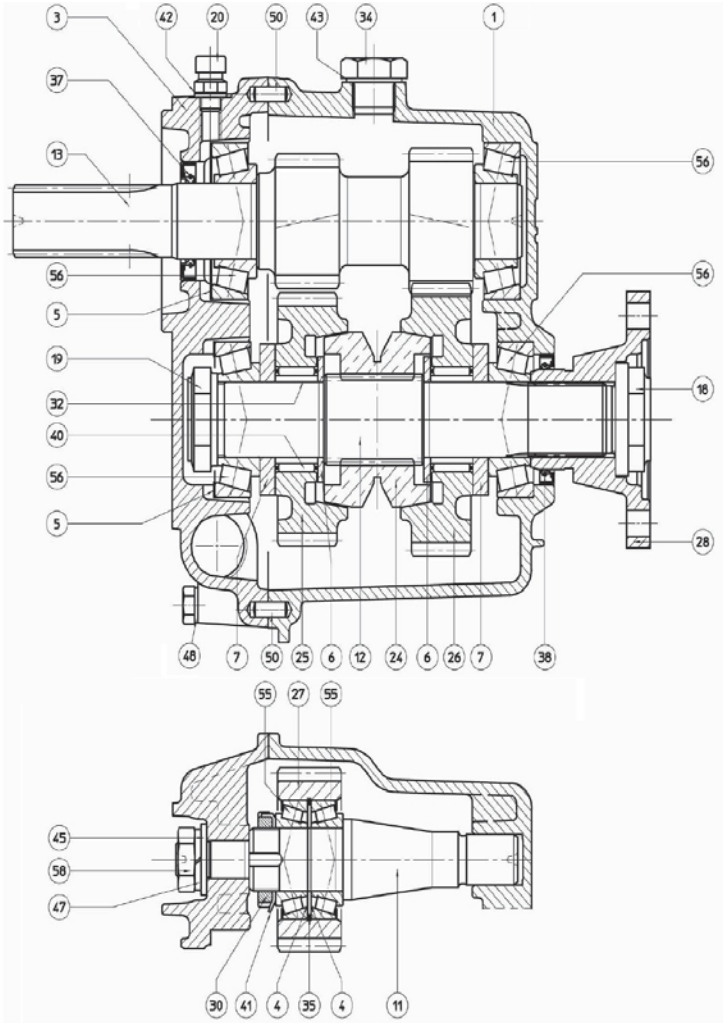

[NP] Not provided

Gearbox TMC-60P

	D_5036_2		Sheet 2/2		
FIG.	REF.	QTY	DESCR.	FROM	UPTO
43	56000083	1	Washer 21-26-1,5		
45	24813500.97	1	Washer DIN 125-14 [NP]		
47	24810221	1	Washer GROWER DIN 127-14 [NP]		
48	24850093	10	Washer		
50	24860023	2	Pin		
55	24860206	2	Conical Roller Bearing 32005		
56	25710104	4	Conical Roller Bearing 32206-J2/Q		
58	24880307	1	Nut		

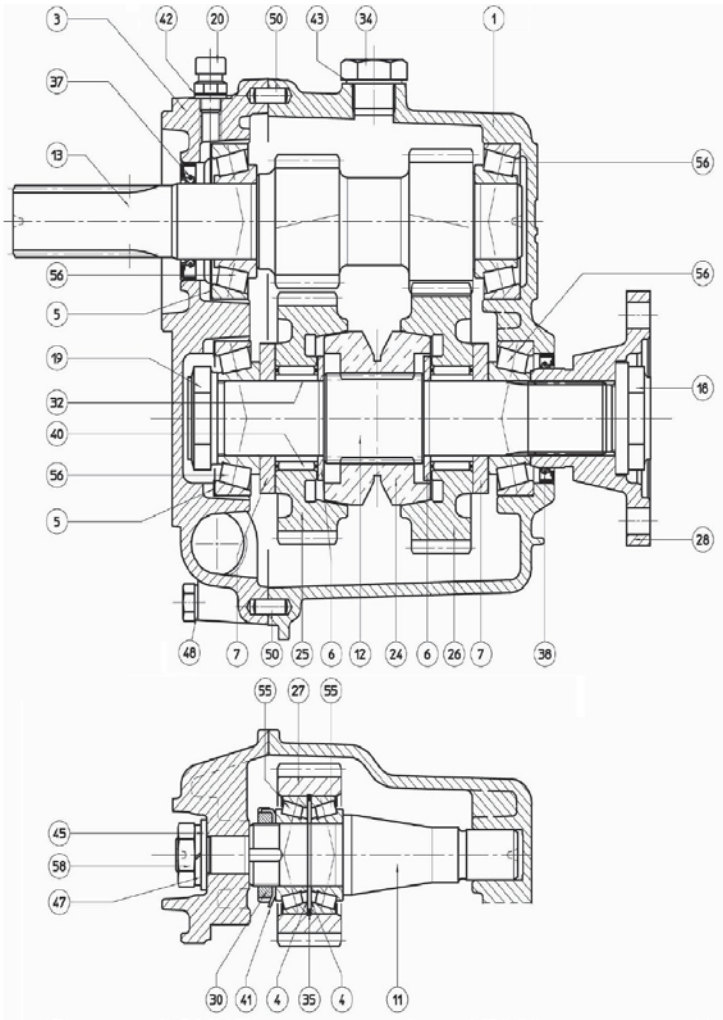

Gearbox TMC-60P

	D_5035_3		Kit de Service		
FIG.	**REF.**	**QTY**	**DESCR.**	**FROM**	**UPTO**
1	24883401	1	Gasket Kit		
2	A0201000	2	ATF Sole Diesel Oil 1L		

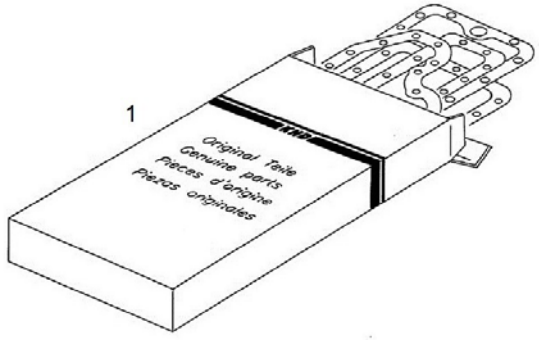

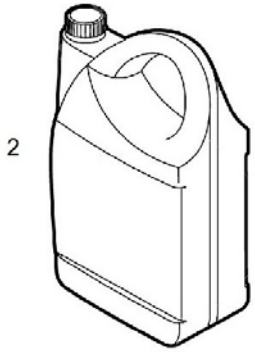

Gearbox TMC-60A

	D_5034_1		Sheet 1/2		
FIG.	**REF.**	**QTY**	**DESCR.**	**FROM**	**UPTO**
1	24880002A	1	Box		
3	24880001A	1	Cover		
4	24880305	2	Spacer		
5	24813500.67	6	Spacer		
6	24880218	2	Shim		
7	24880217	2	Shim		
10	24880301	1	INTERMEDIATE Shaft		
11	24880201	1	Shaft Output		
12A	24884101	1	Input Shaft		
12B	24883101A	1	Input Shaft		
17	24850099	1	Nut		
18	24880222	1	Nut		
21	24880202	1	Clutch		
22	24880302	1	Gear		
23A	24884210A	1	Gear		
23B	24883210A	1	Gear		
24	24883203A	1	Gear [NP]		
25	24880224	1	Flange Output		
27	24880310	1	Nut		
29	24880205	2	CAGE		
31	24830011	1	Plug		
32	24880309	1	Ring		
34	22210103	1	Seal,oil BA 30-47-7		
35	25210214	1	Seal,oil 40-52-7		
37	24880204	2	Bearing, needle		
38	24880308	1	Washer		
40	56000083	1	Washer 21-26-1,5		
42	51030014	1	Washer DIN 125-14		
44	53033014	1	Washer GROWER DIN 127-14		
45	24850093	10	Washer		
47	24860023	2	Pin		
52	24860206	2	Conical Roller Bearing 32005		
53	25710104	4	Conical Roller Bearing 32206-J2/Q		
55	24880307	1	Nut		

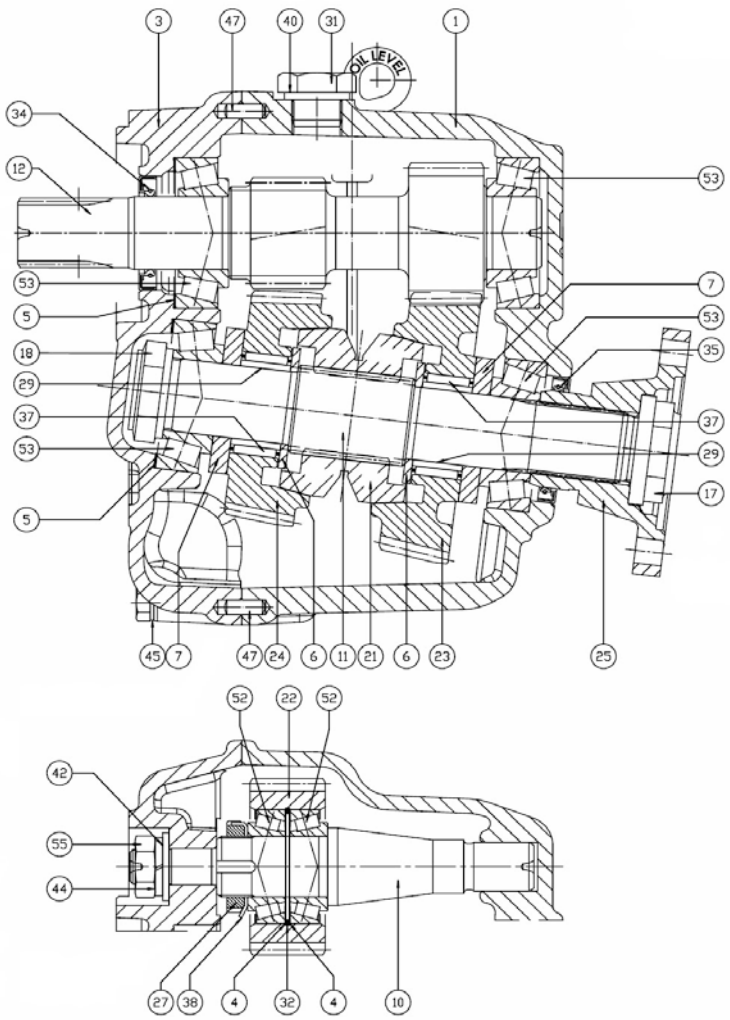

[NP] Not provided

Gearbox TMC-60A

D_5034_2			Sheet 2/2		
FIG.	**REF.**	**QTY**	**DESCR.**	**FROM**	**UPTO**
2	24880401	1	Cover		
8	24860411	1	Spring		
9	24880402	1	Shaft		
13	24850005	1	Plate, IDENTIFICATION		
14	24860006	1	ATF Oil Plate		
15	24860419	1	Pin		
16	24810424	1	Lever		
19	24810065	1	Plug		
20	24880423	1	Pad		
26	24860008P	1	Gauge		
28	24880409	1	Screw		
30	24850011	1	Plug,oil drain		
33	24860404	1	Oil Seal		
36	24860417	1	O-Ring		
39	24810063	2	Plane Washer		
41	51030008	2	Washer DIN 125-8		
43	53033008	2	Washer GROWER DIN 127-8		
46	53052210	1	Pin DIN 1481 3-20		
48	52102258	7	Bolt DIN 933 M8-25 8.8		
49	52103258	2	Bolt DIN 912 M8-25 8.8		
50	52101263	2	Bolt DIN 931 M8-50 8.8		
51	24860071	2	STUD		
54	52120008	2	Nut DIN 934 M8 8.8		
56	51123008	1	Nut DIN 985 M8 5.6		

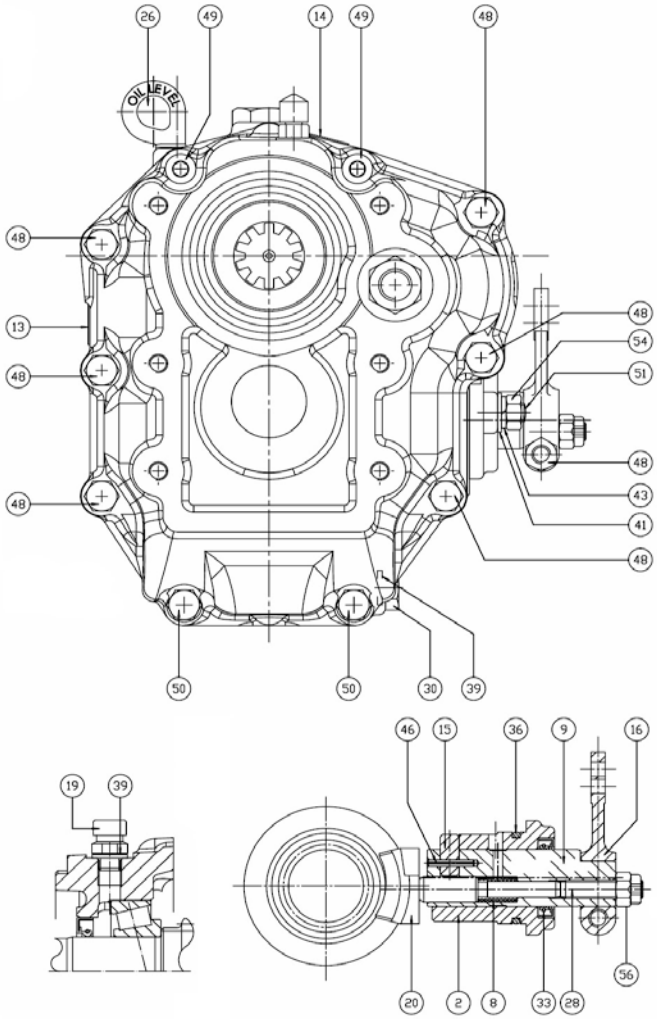

Gearbox TMC-60A

	D_5035_3		Kit de Service		
FIG.	**REF.**	**QTY**	**DESCR.**	**FROM**	**UPTO**
1	24883401	1	Gasket Kit		
2	A0201000	2	ATF Sole Diesel Oil 1L		

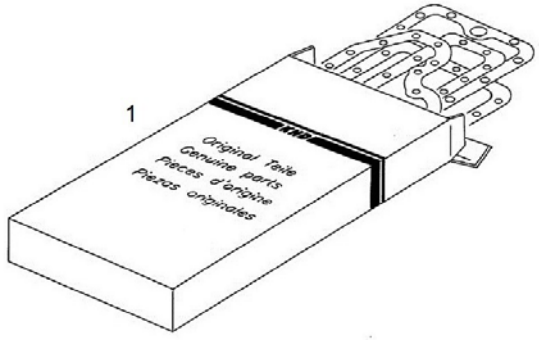

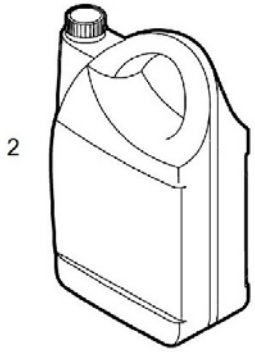

SP60 S.Drive

D_5037_1			Sheet 1/4 SP60 S.Drive V1		
FIG.	REF.	QTY	DESCR.	FROM	UPTO
13	24813500.13	1	Body [NP]		
26	24813500.26	6	Washer		
27	24860047	6	Bolt DIN 912 M8-30 8.8 [NP]		
38	24813500.38	1	Bracket Control		
39	24810424	1	Lever		
40	24810047	1	Bolt DIN 933 M8-25 8.8 [NP]		
50	24813500.50	1	Flange CLOSING MEMBRANE		
53	24810063	2	Plane Washer		
54	24810065	1	Plug		
55	24813500.55	1	Gauge Oil LEVEL		
59	24813500.59	1	Body		
71	24813500.71	8	Washer [NP]		
72	24813500.72	8	Screw		
73	24813500.73	1	Propeller Shaft		
78	24813500.78	1	Body		
84	24813500.84	1	Anode SP60		
85	24813500.85	1	Spacer		
87	24813500.87	1	Plug,oil drain		
89	24813500.89	4	Bolt DIN 933 M6-10 8.8 [NP]		

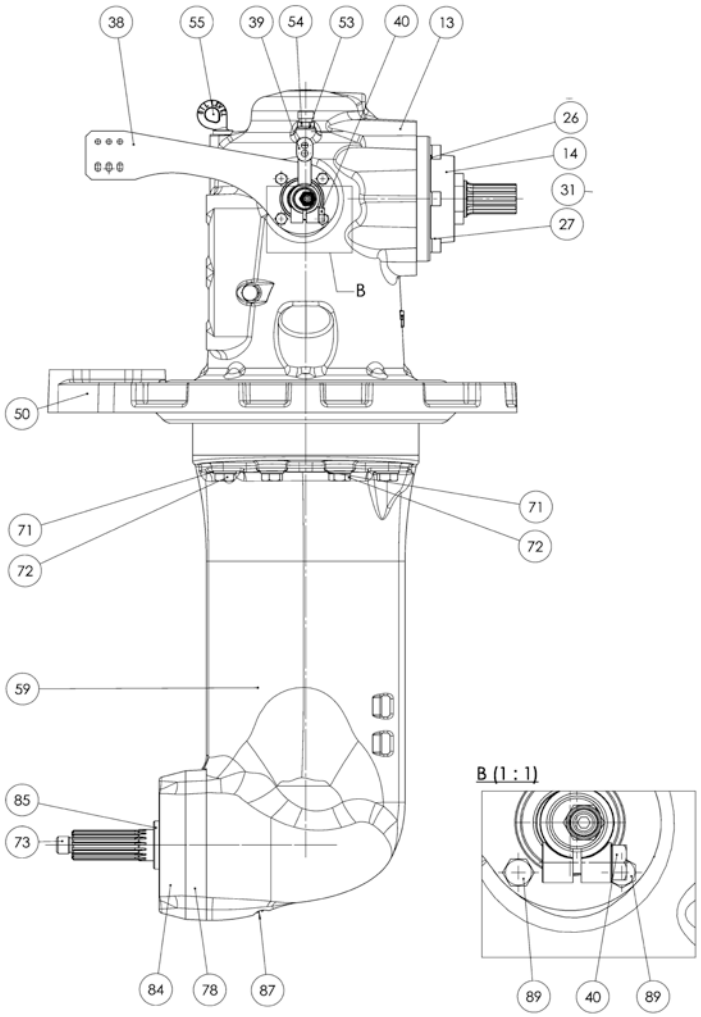

[NP] Not provided

SP60 S.Drive

D_5037_2			Sheet 2/4 SP60 S.Drive V1		
FIG.	REF.	QTY	DESCR.	FROM	UPTO
14	24813500.14	1	Body		
28	24813500.28	1	Body Control		
29	24860404	1	Oil Seal		
31	24860402	1	Shaft		
35	24860423	1	PAD		
43	24810522	1	Washer		
44	24813500.44	1	Plug [NP]		
45	24813500.45	1	Cover		
51	24813500.51	1	Plug [NP]		
52	24860006	1	ATF Oil Plate		
92	24830035	1	Washer		
93	24813500.93	1	Plug		

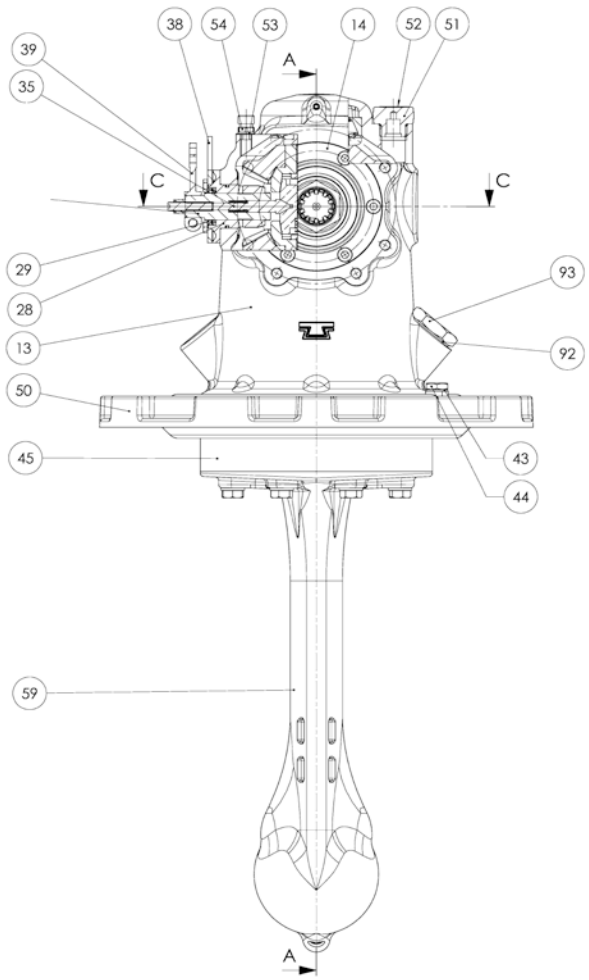

[NP] Not provided

	D_5037_3		Sheet 3/4 SP60 S.Drive V1		
FIG.	REF.	QTY	DESCR.	FROM	UPTO
1	24813500.01	1	Shaft,Output [NP]		
2	24813500.02	1	Cone Clutch		
3	24813500.03	4	Spacer [NP]		
4	24860217	2	Spacer		
5	24813500.05	2	Ring,Bearing		
6	24813500.06	4	Bearing, needle		
7	24813500.07	2	Gear		
8	24813500.08	2	Cover		
9	24813500.09	2	Nut		
10	24813500.10	2	Bearing		
11	24810333	2	Spacer		
12	24813500.12	1	Spring		
17	24813500.17	1	Shaft		
20	24813500.20	1	Screw		
41	24813500.41	1	Gasket		
42	24813500.42	1	Gasket		
46	24813500.46	2	O-Ring		
57	24810506	1	Screw		
60	24813500.60	1	Shaft		
61	24813500.61	1	Ring		
62	24860206	1	Conical Roller Bearing 32005		
63	24813500.63	1	Guide [NP]		
64	24813500.64	1	CIRClip		
65	24813500.65	1	O-Ring		
66	24813500.66	1	Bearing		
67	24813500.67	2	Spacer		
68	24813500.68	1	Gear		
69	24813500.69	2	Washer [NP]		
70	24813500.70	1	Nut		
74	24813500.74	1	Gear		
75	24850108	2	Shim Adjusting		
76	24813500.76	1	Bushing		
77	24813500.77	2	HELICOil		
79	24813500.79	2	Oil Seal		
80	24813500.80	2	O-Ring D. 90X3,5		

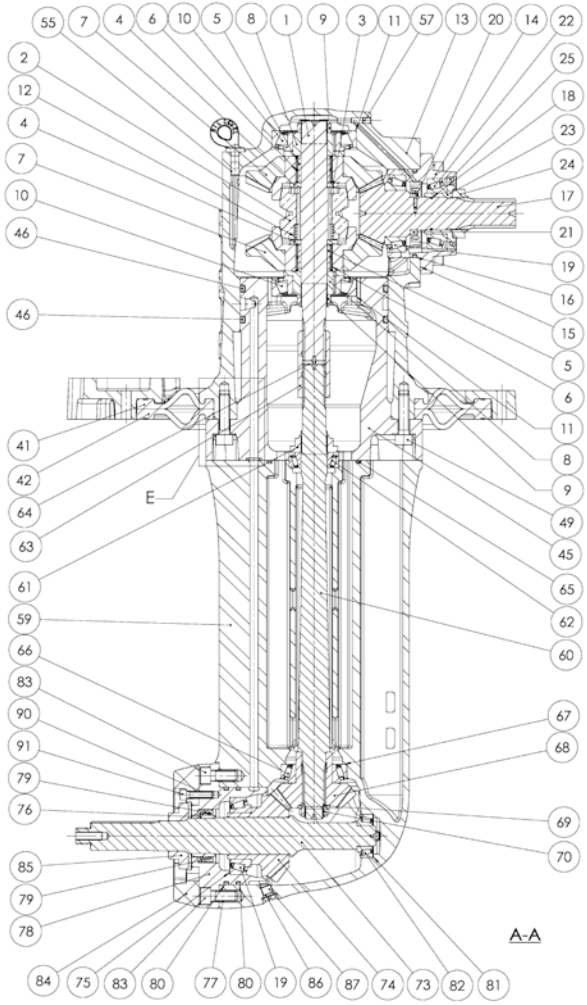

[NP] Not provided

D_5037_3			Sheet 3/4 SP60 S.Drive V1		
FIG.	REF.	QTY	DESCR.	FROM	UPTO
81	24813500.81	3	Spacer		
82	24813500.82	1	Bearing		
83	24813500.83	2	Screw		
86	24813500.86	1	O-Ring D. 8X1,5		
90	24813500.90	3	HELICOil [NP]		
91	24813500.91	3	Screw		

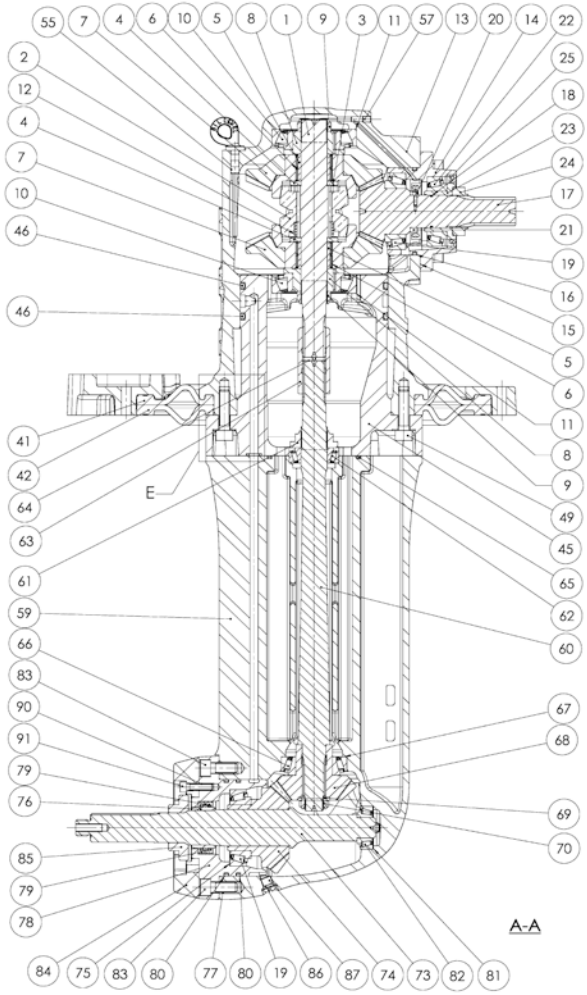

D_5037_4			Sheet 4/4 SP60 S.Drive V1		
FIG.	REF.	QTY	DESCR.	FROM	UPTO
15	24813500.15	2	Spacer		
16	24813500.16	1	O-Ring		
18	24813500.18	1	O-Ring		
19	24850104	2	Conical Roller Bearing 32009-X		
21	24813500.21	1	Impeller		
22	24813500.22	1	Bearing		
23	24813500.23	1	Cover		
24	24813500.24	1	Nut		
25	24813500.25	1	Oil Seal		
30	24860417	1	O-Ring		
32	24860419	1	Pin		
33	24860418	1	Pin DIN 1481 3-20 [NP]		
34	24860411	1	Spring		
36	24860409	1	Screw		
37	24860408	1	Nut DIN 985 M8 5.6 [NP]		
47	24813500.47	1	O-Ring		
48	24813500.48	8	Washer [NP]		
49	24813500.49	8	Screw		
56	24850011	1	Plug,oil drain		
58	24850005	1	Plate, IDENTIFICATION		
88	24813500.88	4	Screw [NP]		

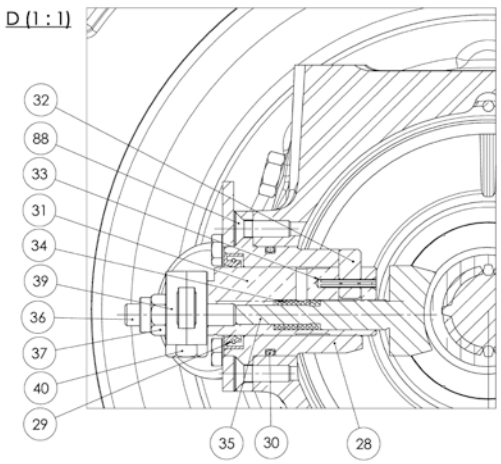

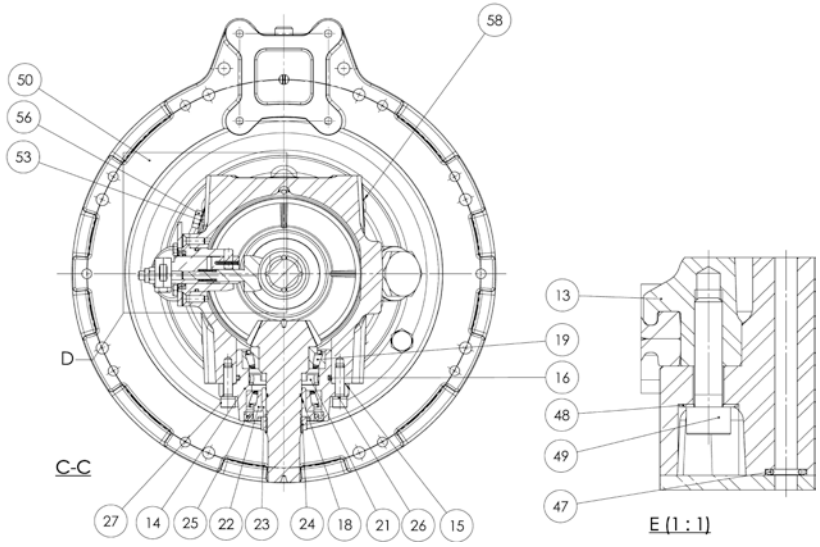

[NP] Not provided

SP60 S.Drive

D_5037_6			Sheet 1/4 SP60 S.Drive V2		
FIG.	REF.	QTY	DESCR.	FROM	UPTO
1	24813500.38	1	Bracket Control	27/09/2016	
2	24813500.95	1	Bracket [NP]	27/09/2016	
3	24813500.59	1	Body	27/09/2016	
4	24813500.13.1	1	Body	27/09/2016	
5	24813500.14	1	Body	27/09/2016	
7	24813500.104.1	1	Body	27/09/2016	
17	24813500.94	1	Spacer	27/09/2016	
25	24813500.73	1	Propeller Shaft	27/09/2016	
28	24813500.78	1	Body	27/09/2016	
31	24813500.96	1	Flexible	27/09/2016	
34	24810424	1	Lever	27/09/2016	
38	24813500.50	1	Flange CLOSING MEMBRANE	27/09/2016	
40	24813500.116	1	Zinc Anode	27/09/2016	
41	24810065	1	Plug	27/09/2016	
54	24813500.123	1	Screw	27/09/2016	
74	24810063	2	Plane Washer	27/09/2016	
77	24813500.126	8	Washer	27/09/2016	
79	24820075	6	Washer GROWER DIN 127-10 [NP]	27/09/2016	
80	24850093	12	Washer	27/09/2016	
82	24813500.26	6	Washer	27/09/2016	
88	24830106	12	Bolt DIN 933 M8-30 8.8 [NP]	27/09/2016	
89	24860047	6	Bolt DIN 912 M8-30 8.8 [NP]	27/09/2016	
90	24820076	6	Bolt DIN 933 M10-30 8.8 [NP]	27/09/2016	

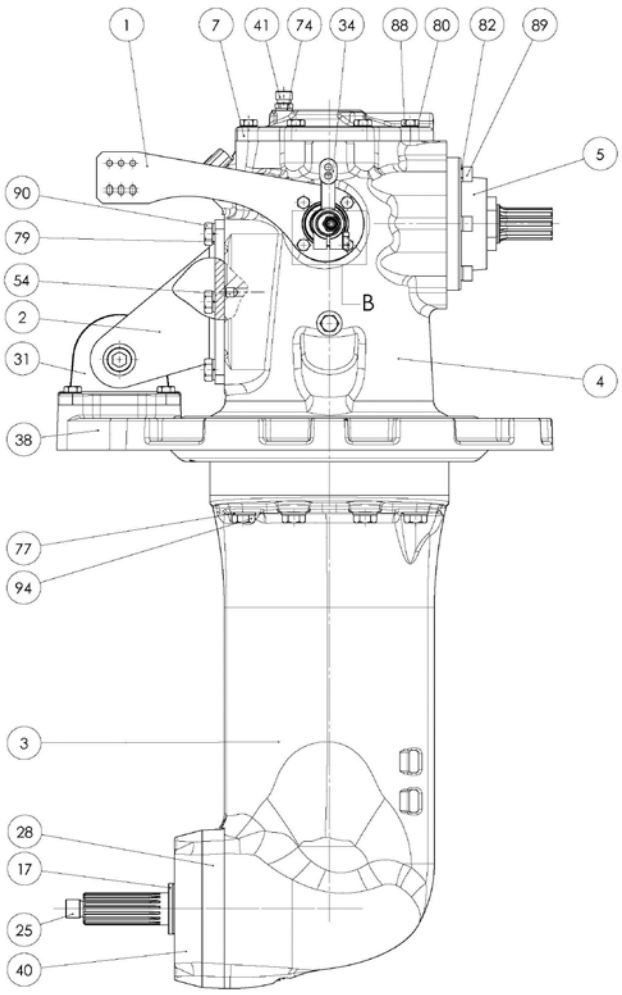

[NP] Not provided

SP60 S.Drive

D_5037_7			Sheet 2/4 SP60 S.Drive V2		
FIG.	**REF.**	**QTY**	**DESCR.**	**FROM**	**UPTO**
6	24813500.28	1	Body Control	27/09/2016	
104	24813500.131	1	Nut	27/09/2016	
29	24813500.45	1	Cover	27/09/2016	
50	24813500.121	1	Gauge Oil Level	27/09/2016	
56	24813500.124	1	Plug	27/09/2016	
58	24850011	1	Plug,oil drain	27/09/2016	
59	24813500.93	1	Plug	27/09/2016	
75	24830035	1	Washer	27/09/2016	
76	24810522	1	Washer	27/09/2016	
87	24810047	1	Bolt DIN 933 M8-25 8.8 [NP]	27/09/2016	
94	24813500.72	8	Screw	27/09/2016	

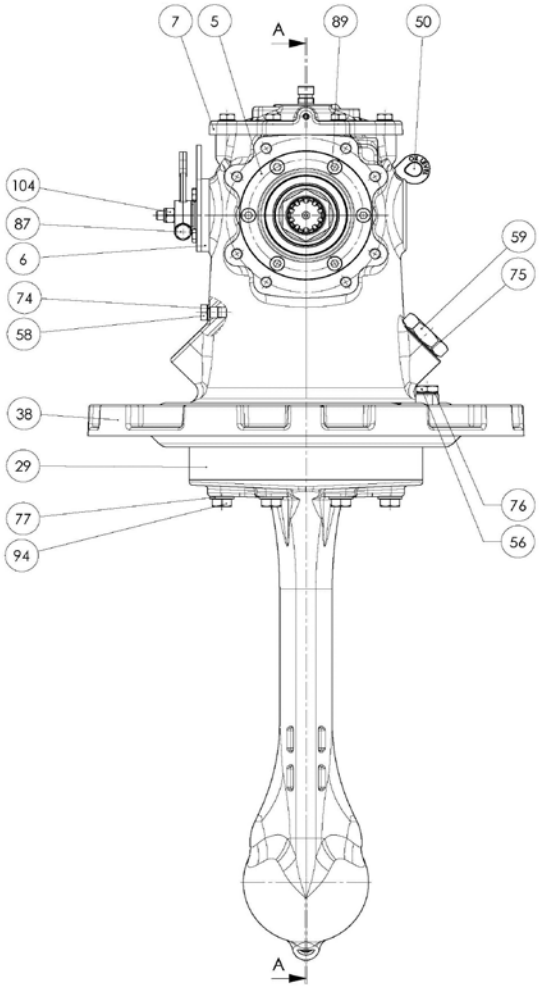

[NP] Not provided

	D_5037_8		Sheet 3/4 SP60 S.Drive V2		
FIG.	REF.	QTY	DESCR.	FROM	UPTO
8	24813500.42	1	Gasket	27/09/2016	
9	24813500.41	1	Gasket	27/09/2016	
10	24810333	6	Spacer	27/09/2016	
100	24813500.10	2	Bearing	27/09/2016	
101	24850104	2	Conical Roller Bearing 32009-X	27/09/2016	
102	24813500.77	2	HELICOil	27/09/2016	
103	24813500.130	3	Helicoil	27/09/2016	
11	24813500.67	2	Spacer	27/09/2016	
12	24850108	2	Shim Adjusting	27/09/2016	
13	24813500.15	2	Spacer	27/09/2016	
14	24813500.113	2	Spacer	27/09/2016	
15	24813500.81	3	Spacer	27/09/2016	
16	24813500.85	1	Spacer	27/09/2016	
18	24860217	2	Spacer	27/09/2016	
20	24813500.12	1	Spring	27/09/2016	
22	24813500.114	1	Shaft, Output	27/09/2016	
23	24813500.17	1	Shaft	27/09/2016	
24	24813500.60	1	Shaft	27/09/2016	
27	24860006	1	ATF Oil Plate	27/09/2016	
30	24813500.23	1	Cover	27/09/2016	
32	24813500.115	2	Bearing Support	27/09/2016	
35	24813500.61	1	Ring	27/09/2016	
36	24813500.09	2	Nut	27/09/2016	
37	24813500.24	1	Nut	27/09/2016	
39	24813500.76	1	Bushing	27/09/2016	
42	24813500.87	1	Plug,oil drain	27/09/2016	
44	24813500.21	1	Impeller	27/09/2016	
45	24813500.02	1	Cone Clutch	27/09/2016	
46	24813500.117	2	Gear	27/09/2016	
47	24813500.118	1	Gear	27/09/2016	
48	24813500.119	1	Pinion	27/09/2016	
49	24813500.120	1	Shaft Coupling	27/09/2016	
51	24813500.122	2	Washer	27/09/2016	
52	24813500.70	1	Nut	27/09/2016	
55	24813500.05	2	Ring,Bearing	27/09/2016	

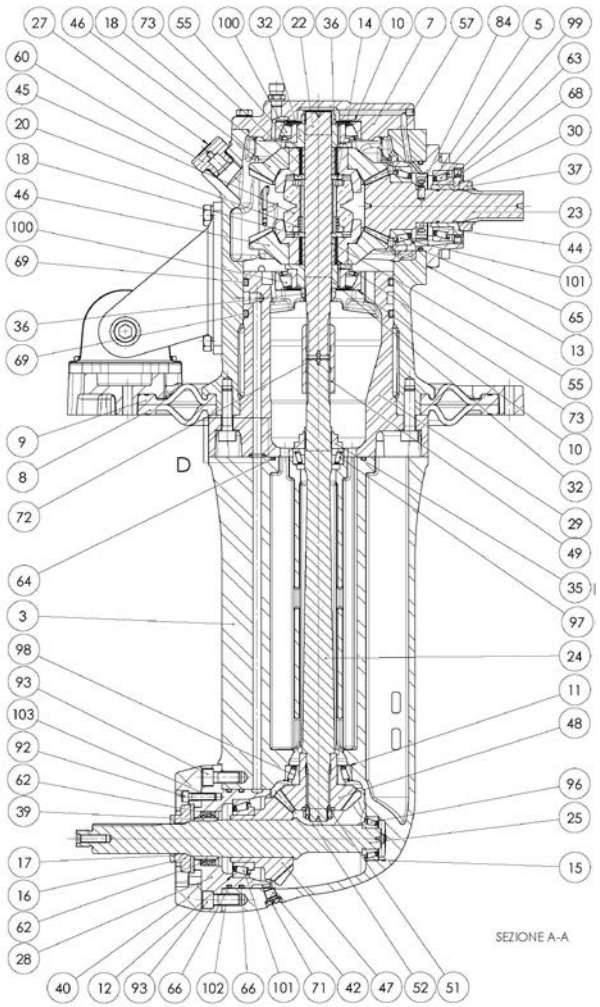

D_5037_8			Sheet 3/4 SP60 S.Drive V2		
FIG.	REF.	QTY	DESCR.	FROM	UPTO
57	24810326	1	Plug	27/09/2016	
60	24813500.125	1	Plug	27/09/2016	
62	24813500.79	2	Oil Seal	27/09/2016	
63	24813500.25	1	Oil Seal	27/09/2016	
64	24813500.65	1	O-Ring	27/09/2016	
65	24813500.16	1	O-Ring	27/09/2016	
66	24813500.80	2	O-Ring D. 90X3,5	27/09/2016	
68	24813500.18	1	O-Ring	27/09/2016	
69	24813500.46	2	O-Ring	27/09/2016	
71	24813500.86.1	1	O-Ring	27/09/2016	
72	24813500.64	1	CIRClip	27/09/2016	
73	24813500.06	4	Bearing, needle	27/09/2016	
84	24813500.128	1	Pin	27/09/2016	
92	24813500.91	3	Screw	27/09/2016	
93	24813500.83	2	Screw	27/09/2016	
96	24813500.82	1	Bearing	27/09/2016	
97	24860206	1	Conical Roller Bearing 32005	27/09/2016	
98	24813500.66	1	Bearing	27/09/2016	
99	24813500.22	1	Bearing	27/09/2016	

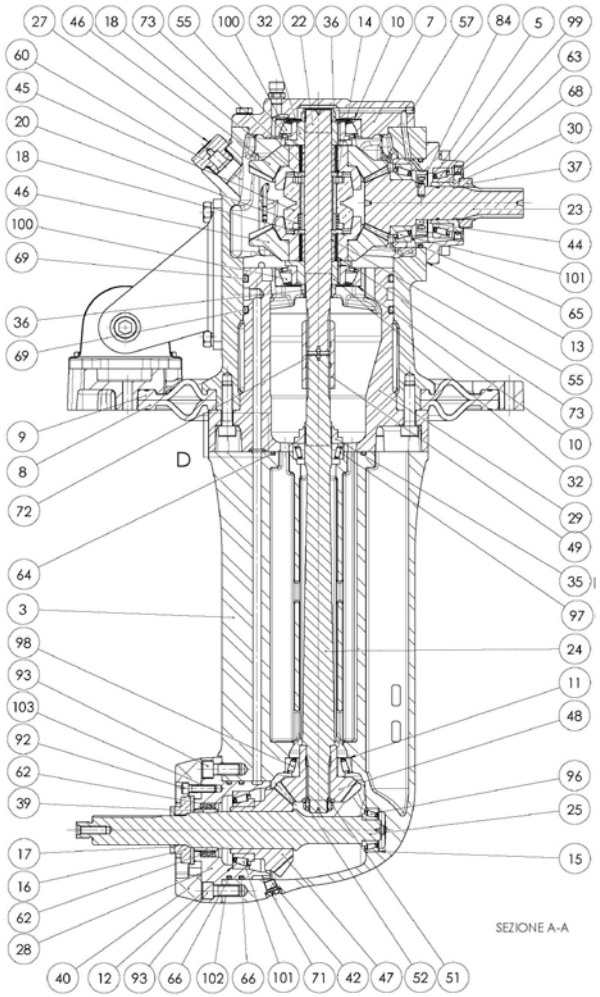

SP60 S.Drive

D_5037_9			Sheet 4/4 SP60 S.Drive V2		
FIG.	REF.	QTY	DESCR.	FROM	UPTO
105	24813500.99	1	Nut [NP]	27/09/2016	
19	24860411	1	Spring	27/09/2016	
21	24860402	1	Shaft	27/09/2016	
26	24850005	1	Plate, IDENTIFICATION	27/09/2016	
33	24860419	1	Pin	27/09/2016	
43	24860423	1	PAD	27/09/2016	
53	24860409	1	Screw	27/09/2016	
61	24860404	1	Oil Seal	27/09/2016	
67	24860417	1	O-Ring	27/09/2016	
70	24813500.47	1	O-Ring	27/09/2016	
78	24813500.97	2	Washer DIN 125-14 [NP]	27/09/2016	
81	24813500.127	8	Washer	27/09/2016	
83	24860418	1	Pin DIN 1481 3-20 [NP]	27/09/2016	
85	24813500.89	4	Bolt DIN 933 M6-10 8.8 [NP]	27/09/2016	
86	24813500.129	4	Screw	27/09/2016	
91	24813500.98	1	Bolt	27/09/2016	
95	24813500.49	8	Screw	27/09/2016	

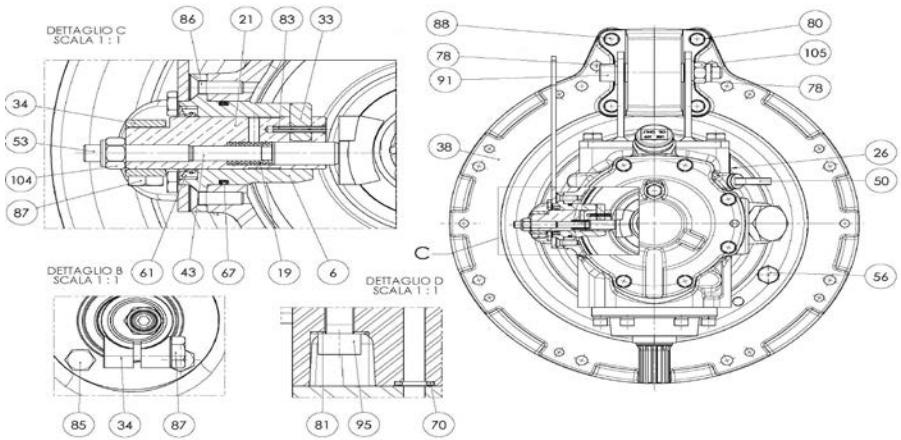

[NP] Not provided

	D_5037_5		Maintenance Kit		
FIG.	REF.	QTY	DESCR.	FROM	UPTO
1	24813401	1	Kit Gasket		
2	A0201000	3	ATF Sole Diesel Oil 1L		
NS	24813500.84	1	Anode SP60 [NS]		

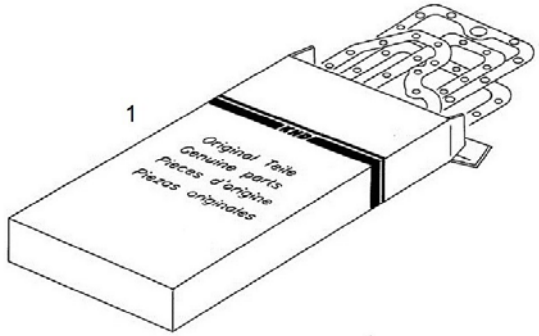

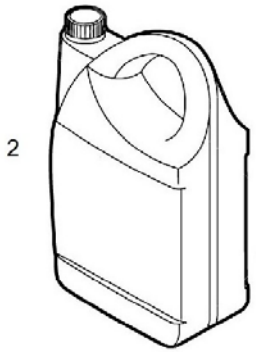

[NS] Not shown

Gearbox TM-345

D_5023_1			Sheet 1/4		
FIG.	REF.	QTY	DESCR.	FROM	UPTO
1	24850091	1	Screw		
2	24850092	3	Washer		
3	24850090	2	Washer		
4	24820068	3	Plug M8X1		
5	24820086	3	Washer 8-13-1,5 [NP]		
6	24810065	1	Plug		
7	24850008	1	Gauge Oil LEVEL		
26	24850028	11	Screw		
41	24810044	5	Bolt DIN 933 M6-16 8.8 [NP]		
56	24850005	1	Plate, IDENTIFICATION		
59	24810063	1	Plane Washer		
60	24850011	1	Plug,oil drain		
61	24850040	2	Bolt DIN 933 M6-25 8.8 [NP]		
62	24810047	1	Bolt DIN 933 M8-25 8.8 [NP]		
77	24810532	1	SWITCHER		
78	24810533	1	O-Ring D. 14X1,7		
79	24850527	1	Pin		

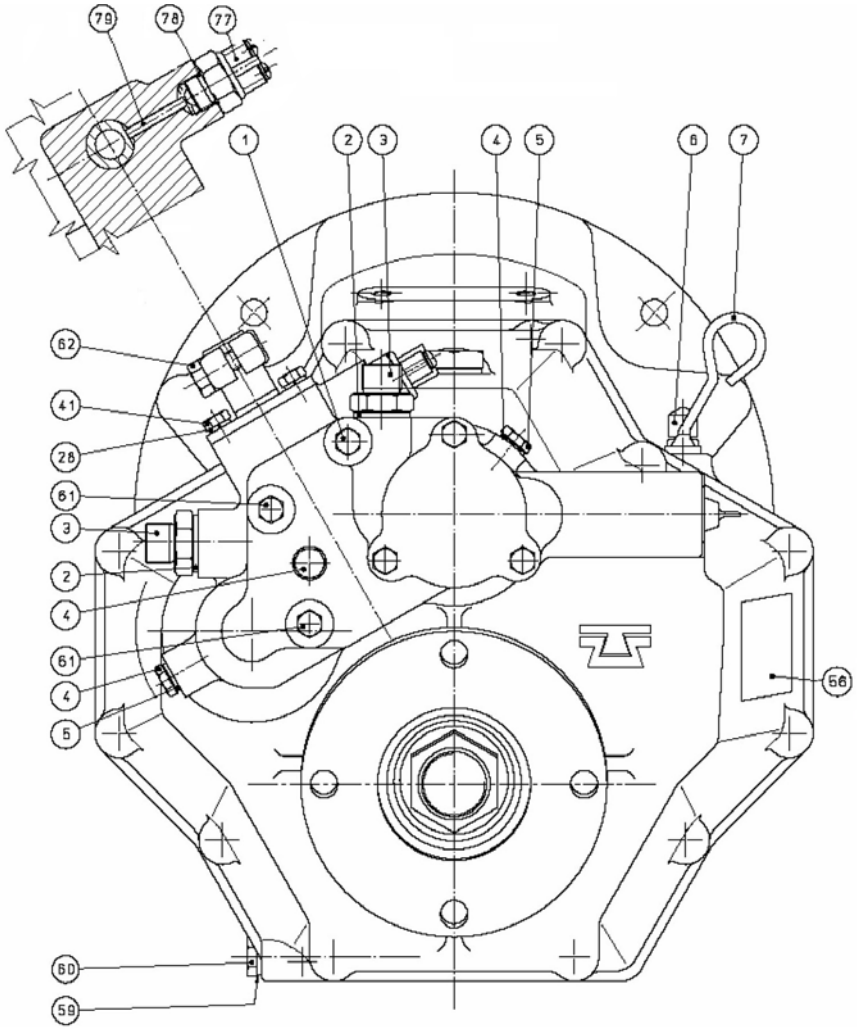

[NP] Not provided

Gearbox TM-345

	D_5023_2		Sheet 2/4		
FIG.	**REF.**	**QTY**	**DESCR.**	**FROM**	**UPTO**
33	24830113	1	Screw		

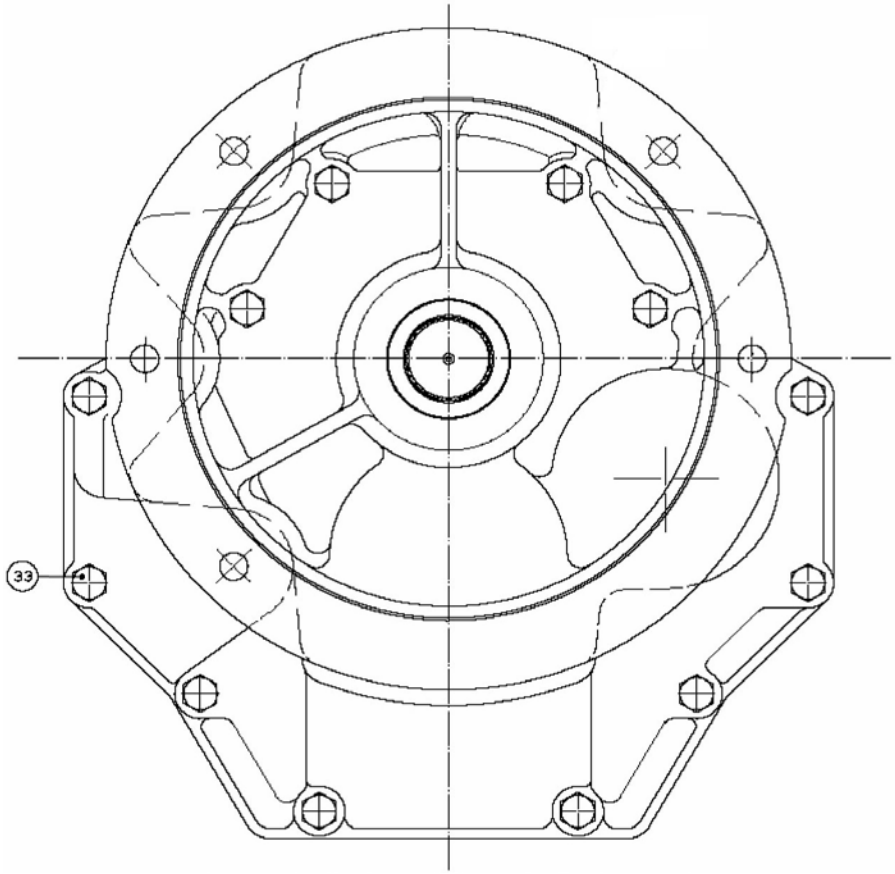

Gearbox TM-345

	D_5023_3		Sheet 3/4		
FIG.	**REF.**	**QTY**	**DESCR.**	**FROM**	**UPTO**
8	24850323	2	Washer		
9-10	24850403	2	Clutch Plate Kit		
11	24850310	2	Ring		
12	24850307	2	Ring		
13	24850333	2	Spacer		
14	24850312	2	SEGER		
15A	24852203	1	Gear R. 1,54 TM 345		
15B	24853203	1	Gear R. 2 TM 345		
15C	24854203	1	Gear R. 2,47 TM 345		
16	24850012	1	Plug		
17	24850318	4	Ring		
18	24850306	4	Bearing, needle		
19	24850325	2	Washer		
20	24850308	2	Conical Roller Bearing 32305		
21	24850328	4	Washer		
22	24810326	2	Plug		
23	24850016	1	Bushing		
24	24850020	1	PUMB Box		
25	24850015	1	Pump Cover		
27	24850029	3	Screw		
28	24810042	9	Washer GROWER DIN 127-6 [NP]		
29	24850095	1	Gear, Pump Out		
30	24850094	1	Pump Shaft		
31	24850096	1	Gear, Pump INNER		
32	24850097	1	O-Ring D. 50X1,7		
34	24850099	1	Nut		
35	24850224A	1	Flange, Output TM-345A		
36	24840103	1	Grommet		
37	24850212	1	Conical Roller Bearing 30207A		
38	24850001A	1	Front Body TM-345A		
39A	24852210	1	Gear R. 1,54 TM 345		
39B	24853210	1	Gear R. 2 TM 345		
39C	24854210	1	Gear R. 2,47 TM 345		
40	24850013	2	Pin		
42	24850080	1	Plate Pipe		

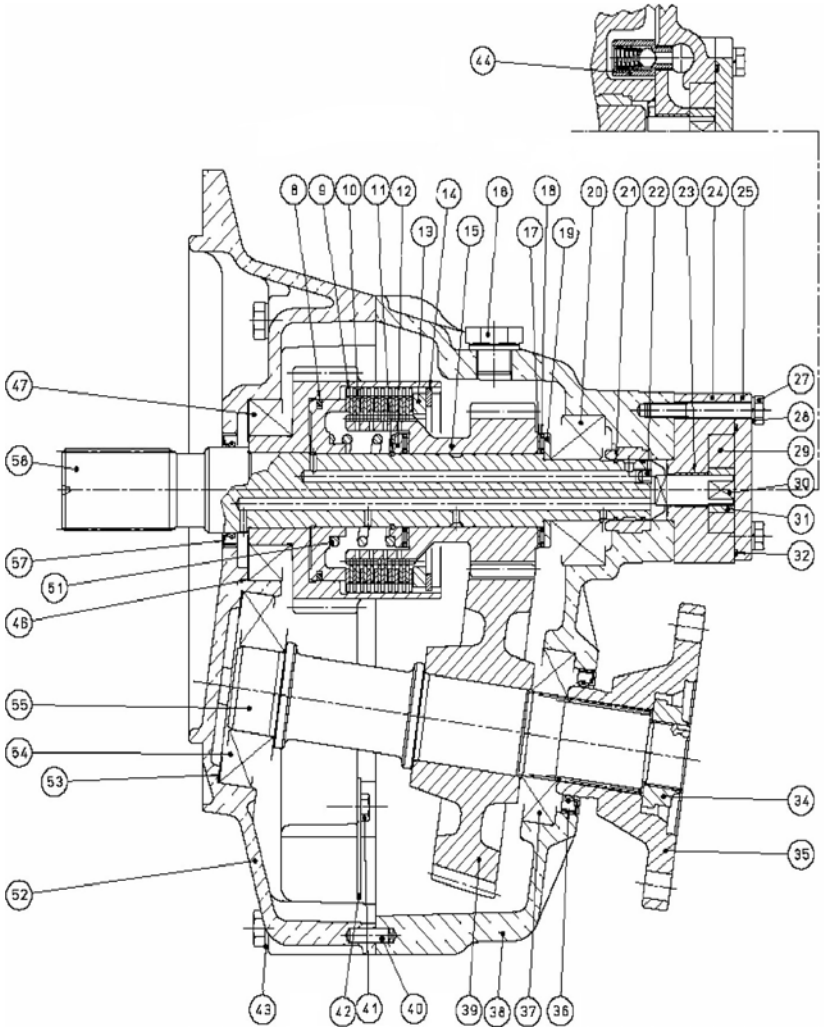

[NP] Not provided

Gearbox TM-345

	D_5023_3		Sheet 3/4		
FIG.	**REF.**	**QTY**	**DESCR.**	**FROM**	**UPTO**
43	24850093	12	Washer		
44	24850063	1	By pass Valve		
46	24850108	6	Shim Adjusting		
47	24850104	2	Conical Roller Bearing 32009-X		
51	24850122	2	Spring		
52	24850207A	1	Cover TM-345A		
53	24810333	3	Spacer		
54	24850206	1	Conical Roller Bearing 31307A		
55	24850201	1	Output Shaft		
57	24810103S	1	Grommet, Oil SILICON		
58	24850101	1	Input Shaft		

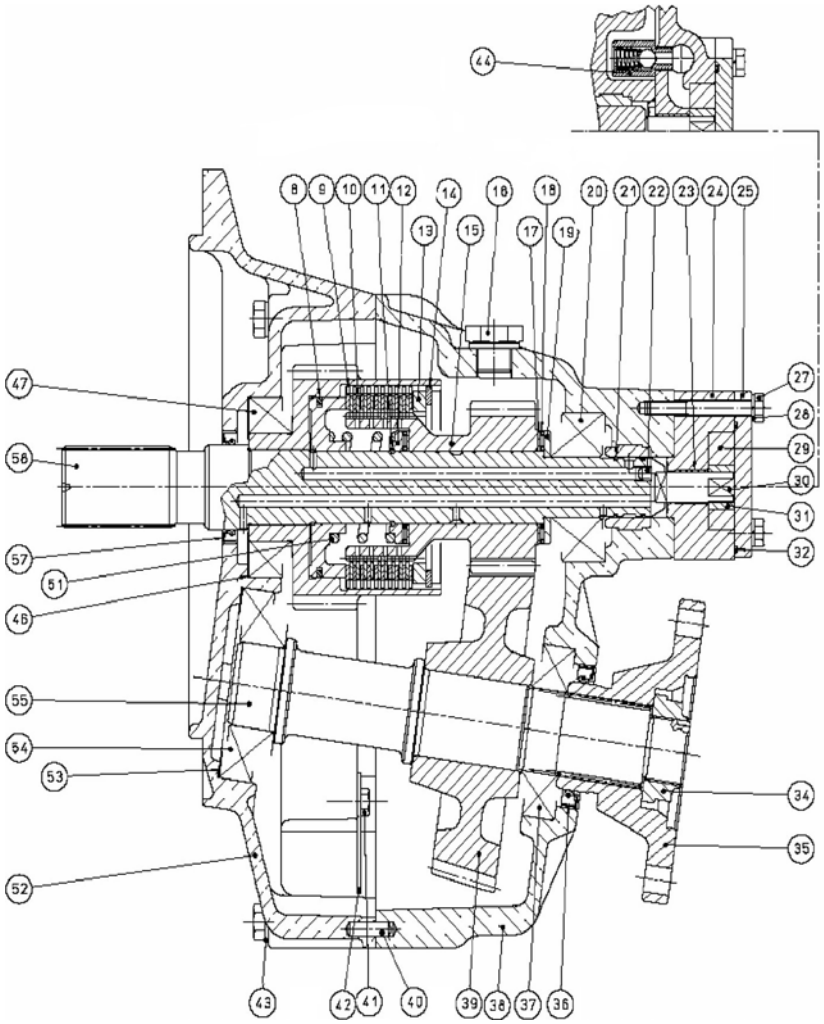

Gearbox TM-345

	D_5023_4		Sheet 4/4		
FIG.	**REF.**	**QTY**	**DESCR.**	**FROM**	**UPTO**
45A	24852203	1	Gear R. 1,54 TM 345		
45B	24853203	1	Gear R. 2 TM 345		
45C	24854203	1	Gear R. 2,47 TM 345		
48	24850124	2	Piston		
49	24850301	1	INTERMEDIATE Shaft		
50	24850330	1	Bell		
63	24810056	2	O-Ring D. 15,08X2,62 [NP]		
64	24850081	1	Aspiration Tube		
65	24810035	1	Oil Filter		
66	24850085	1	Pin		
67	24850059	1	O-Ring D. 50X5,3		
68	24850076	1	Spacer		
69	24850057	1	Nut		
70	24850030	1	Spring		
71	24810424	1	Lever		
72	24810041	1	Support		
73	24850062	1	Selector Valve		
74	24850052	1	Valve		
75	24850078	1	Spring		
76	24850079	1	Screw		

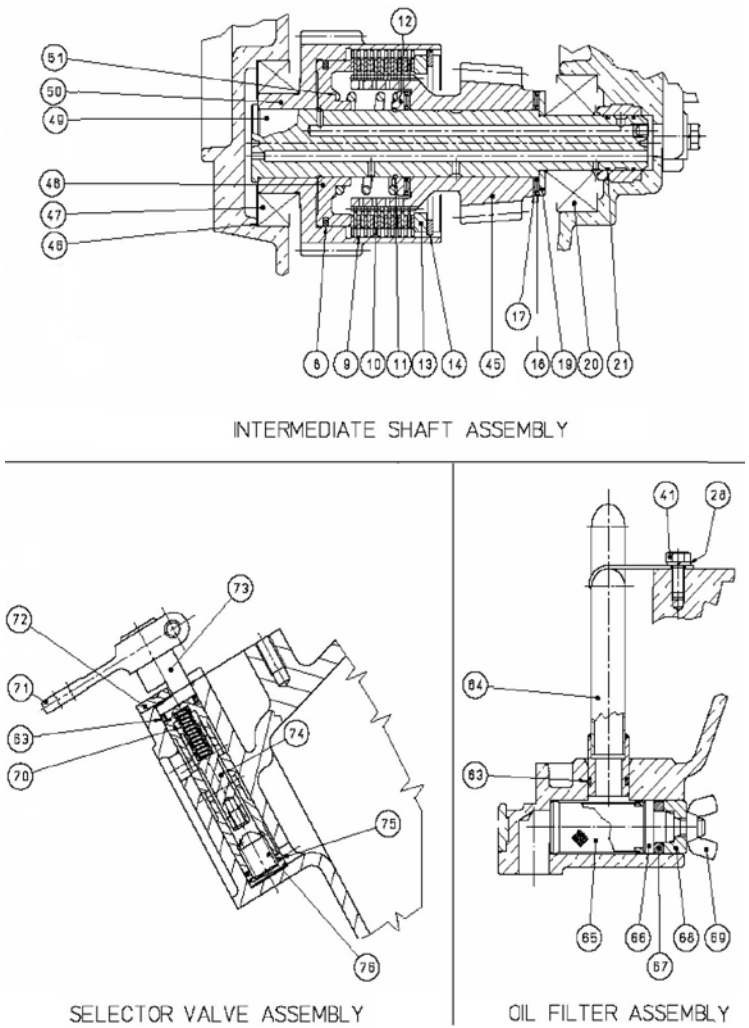

[NP] Not provided

Gearbox TM-345

	D_5023_5		Maintenance Kit		
FIG.	**REF.**	**QTY**	**DESCR.**	**FROM**	**UPTO**
1	24850401	1	Kit Gasket		
2	A0105000	1	15W40 Sole Diesel Oil 5L		
3	24850403	2	Clutch Plate Kit		

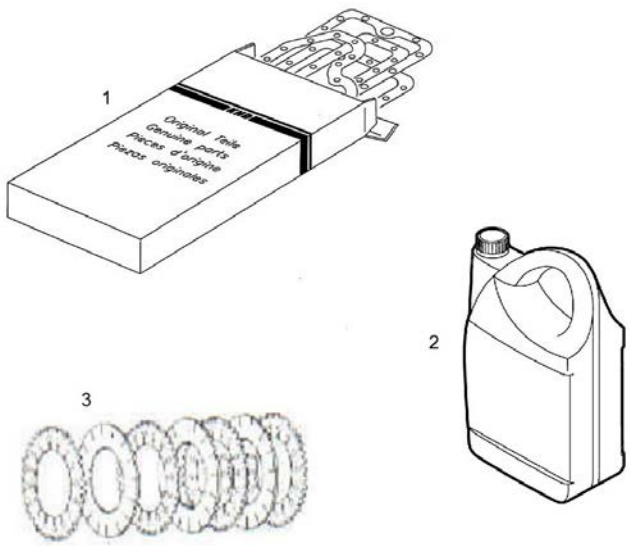

Gearbox TM-345A

D_5024_1			Sheet 1/4		
FIG.	REF.	QTY	DESCR.	FROM	UPTO
1	24850091	1	Screw		
2	24850092	3	Washer		
3	24850090	2	Washer		
4	24820068	3	Plug M8X1		
5	24820086	3	Washer 8-13-1,5 [NP]		
6	24810065	1	Plug		
7	24850008	1	Gauge Oil LEVEL		
26	24850028	11	Screw		
41	24810044	5	Bolt DIN 933 M6-16 8.8 [NP]		
56	24850005	1	Plate, IDENTIFICATION		
59	24810063	1	Plane Washer		
60	24850011	1	Plug,oil drain		
61	24850040	2	Bolt DIN 933 M6-25 8.8 [NP]		
62	24810047	1	Bolt DIN 933 M8-25 8.8 [NP]		
77	24810532	1	SWITCHER		
78	24810533	1	O-Ring D. 14X1,7		
79	24850527	1	Pin		

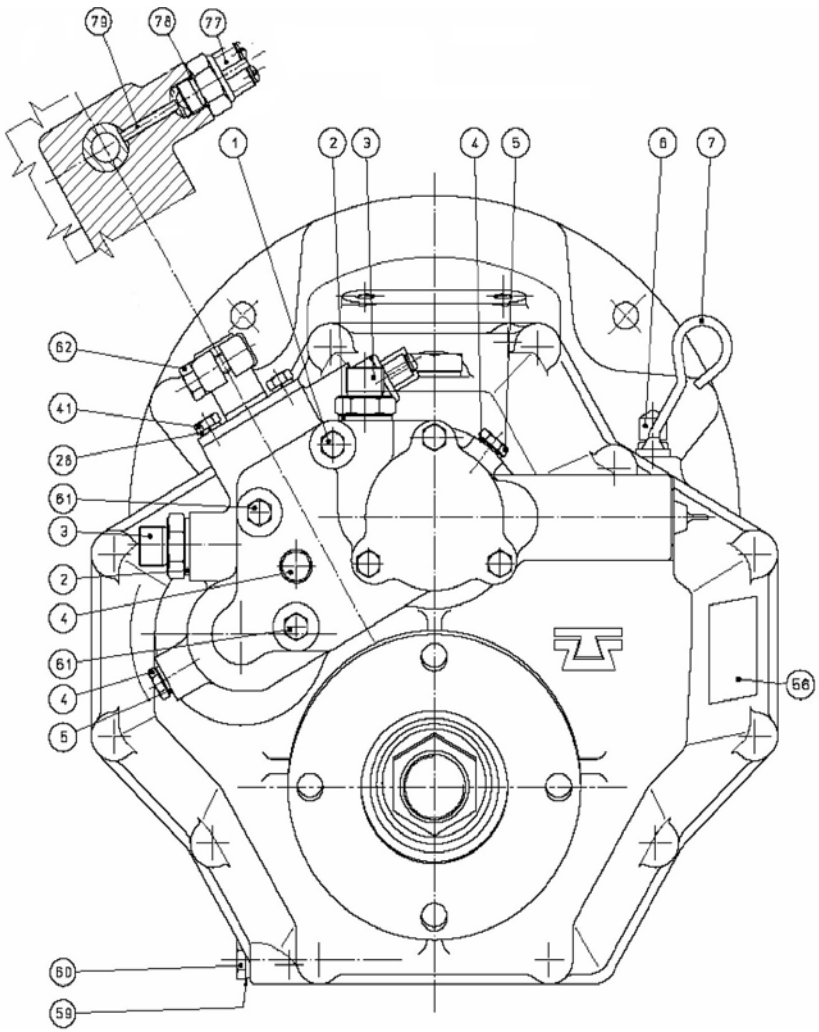

[NP] Not provided

Gearbox TM-345A

	D_5024_2		Sheet 2/4		
FIG.	**REF.**	**QTY**	**DESCR.**	**FROM**	**UPTO**
33	24830113	1	Screw		

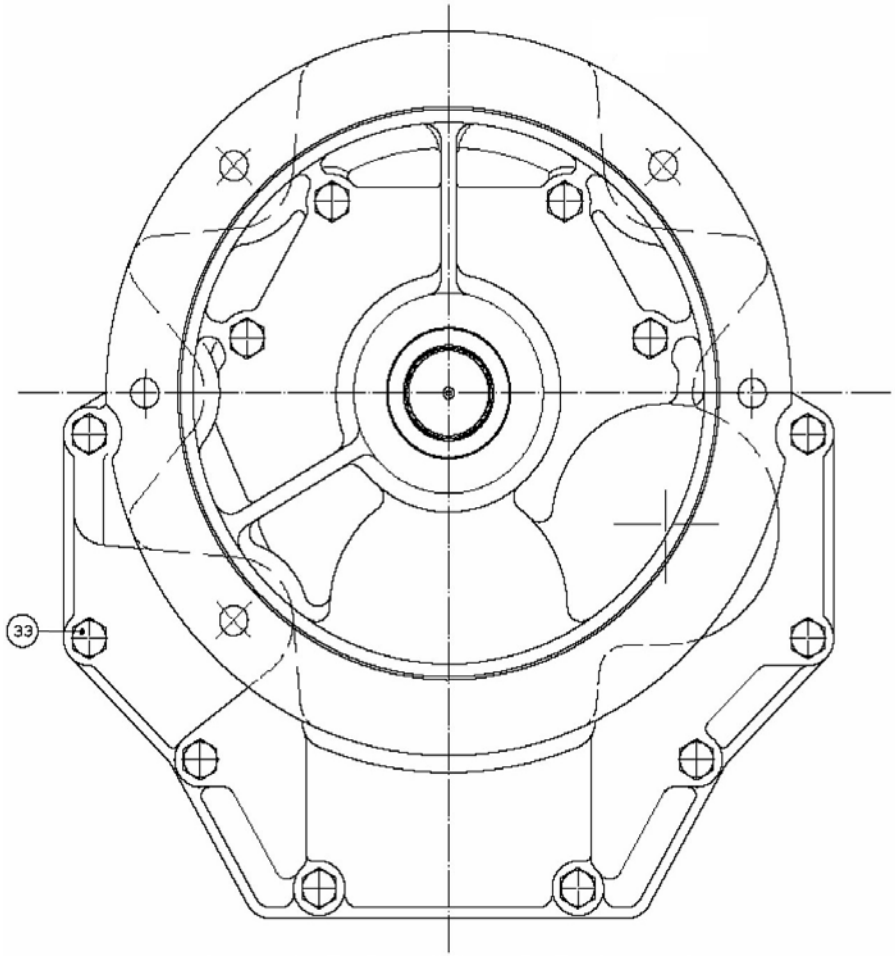

Gearbox TM-345A

	D_5024_3		Sheet 3/4		
FIG.	REF.	QTY	DESCR.	FROM	UPTO
8	24850323	2	Washer		
11	24850310	2	Ring		
12	24850307	2	Ring		
13	24850333	2	Spacer		
14	24850312	2	SEGER		
15A	24852203A	1	Gear R. 1,54 TM 345A		
15B	24853203A	1	Gear Red. 2 TM 345A		
15C	24854203A	1	Gear R. 2,47 TM 345A		
16	24850012	1	Plug		
17	24850318	4	Ring		
18	24850306	4	Bearing, needle		
19	24850325	2	Washer		
20	24850308	2	Conical Roller Bearing 32305		
21	24850328	4	Washer		
22	24810326	2	Plug		
23	24850016	1	Bushing		
24	24850020	1	PUMB Box		
25	24850015	1	Pump Cover		
27	24850029	3	Screw		
28	24810042	9	Washer GROWER DIN 127-6 [NP]		
29	24850095	1	Gear, Pump Out		
30	24850094	1	Pump Shaft		
31	24850096	1	Gear, Pump INNER		
32	24850097	1	O-Ring D. 50X1,7		
34	24850099	1	Nut		
35	24850224A	1	Flange, Output TM-345A		
36	24840103	1	Grommet		
37	24850212	1	Conical Roller Bearing 30207A		
38	24850001A	1	Front Body TM-345A		
39A	24852210A	1	Gear R. 1,54 TM 345A		
39B	24853210A	1	Gear R. 2 TM 345A		
39C	24854210A	1	Gear R. 2,47 TM 345A		
40	24850013	2	Pin		
42	24850080	1	Plate Pipe		
43	24850093	12	Washer		

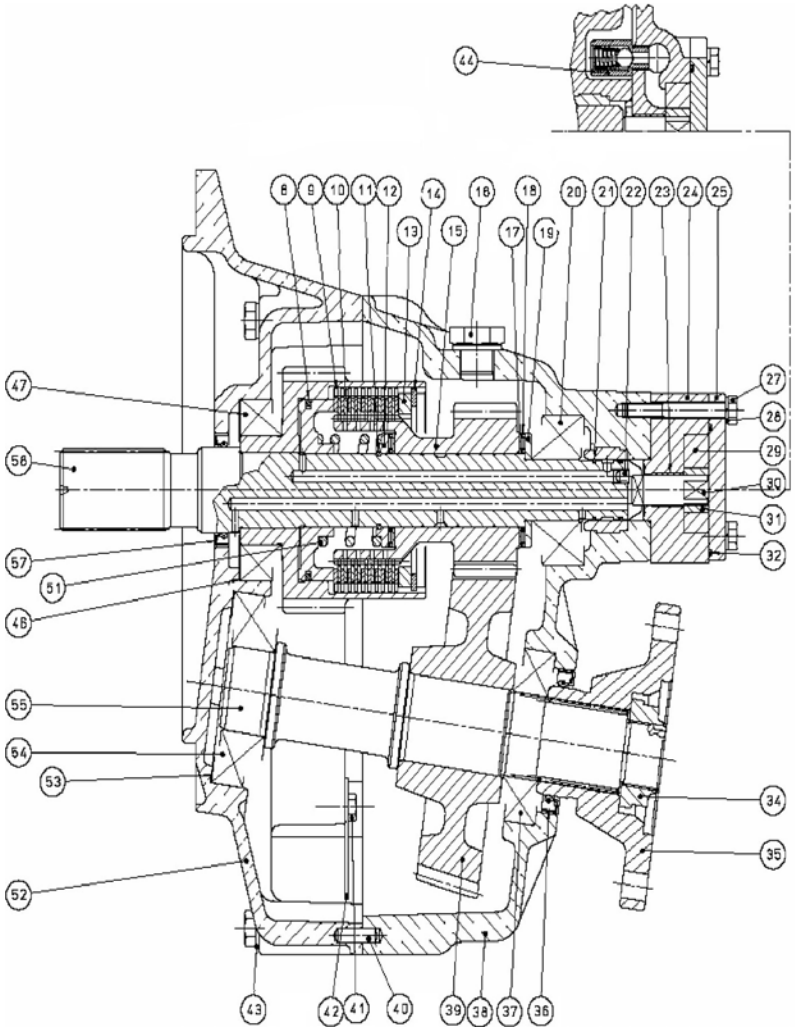

[NP] Not provided

Gearbox TM-345A

	D_5024_3		Sheet 3/4		
FIG.	**REF.**	**QTY**	**DESCR.**	**FROM**	**UPTO**
44	24850063	1	By pass Valve		
46	24850108	6	Shim Adjusting		
47	24850104	2	Conical Roller Bearing 32009-X		
51	24850122	2	Spring		
52	24850207A	1	Cover TM-345A		
53	24810333	3	Spacer		
54	24850206	1	Conical Roller Bearing 31307A		
55	24850201	1	Output Shaft		
57	24810103S	1	Grommet, Oil SILICON		
58	24850101	1	Input Shaft		

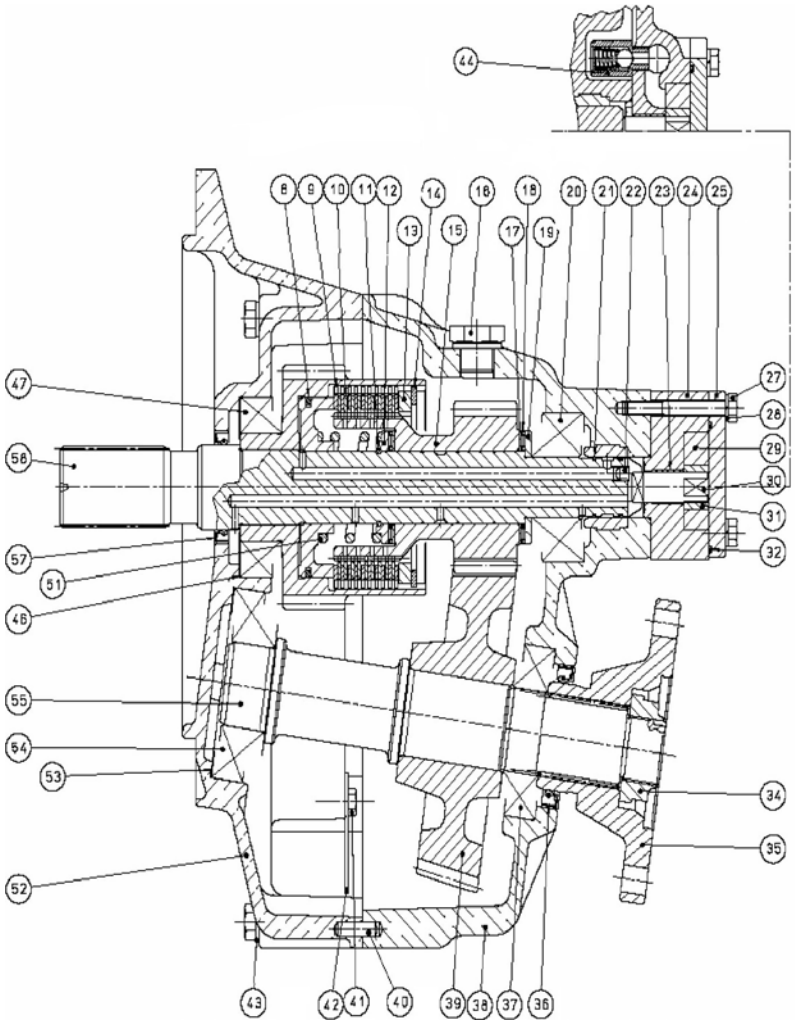

Gearbox TM-345A

	D_5024_4		Sheet 4/4		
FIG.	**REF.**	**QTY**	**DESCR.**	**FROM**	**UPTO**
45A	24852302	1	Gear R. 1,54 TM 345A		
45B	24853302	1	Gear R. 2 TM 345A		
45C	24854302	1	Gear R. 2,47 TM 345A		
48	24850124	2	Piston		
49	24850301	1	INTERMEDIATE Shaft		
50	24850330	1	Bell		
63	24810056	2	O-Ring D. 15,08X2,62 [NP]		
64	24850081	1	Aspiration Tube		
65	24810035	1	Oil Filter		
66	24850085	1	Pin		
67	24850059	1	O-Ring D. 50X5,3		
68	24850076	1	Spacer		
69	24850057	1	Nut		
70	24850030	1	Spring		
71	24810424	1	Lever		
72	24810041	1	Support		
73	24850062	1	Selector Valve		
74	24850052	1	Valve		
75	24850078	1	Spring		
76	24850079	1	Screw		

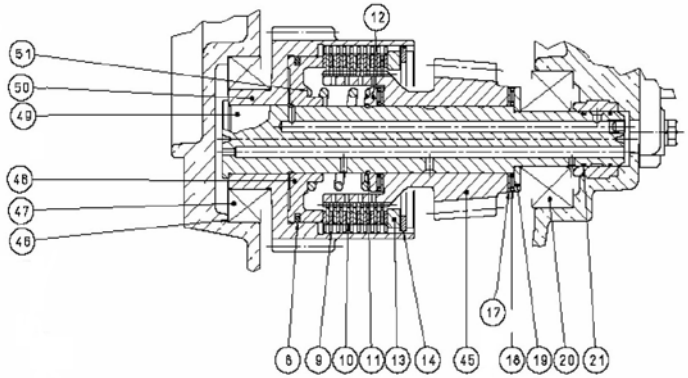

INTERMEDIATE SHAFT ASSEMBLY

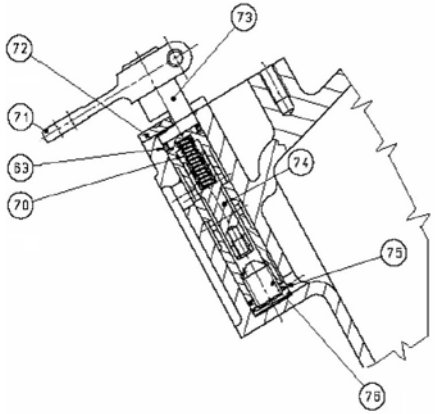

SELECTOR VALVE ASSEMBLY

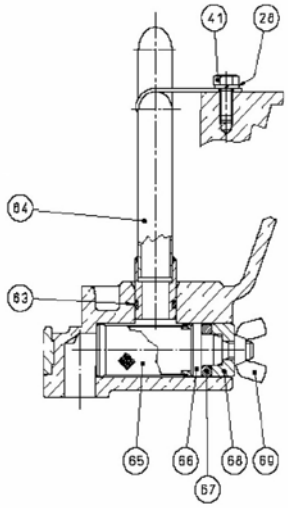

OIL FILTER ASSEMBLY

[NP] Not provided

Gearbox TM-345A

	D_5023_5		Maintenance Kit		
FIG.	**REF.**	**QTY**	**DESCR.**	**FROM**	**UPTO**
1	24850401	1	Kit Gasket		
2	A0105000	1	15W40 Sole Diesel Oil 5L		
3	24850403	2	Clutch Plate Kit		

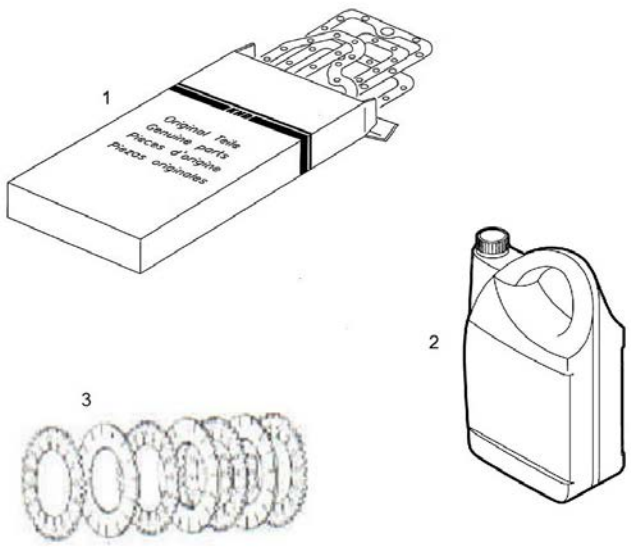

Kit Gearbox

13410100			Kit S-Drive VOLVO 120SB/120SC/120SE		
FIG.	**REF.**	**QTY**	**DESCR.**	**FROM**	**UPTO**
1	13410041	1	Spacer		
2	53033006	12	Washer GROWER DIN 127-6		
3	52103161	6	Bolt DIN 912 M6-40 8.8		
4	13810042	1	Flexible Coupling Type F D. 175 VULKAN		
5	52103156	6	Bolt DIN 912 M6-16 8.8		
6	13410022	1	Adaptor Flange M-34		
7	53033012	2	Washer GROWER DIN 127-12		
9	53038012	3	Washer DIN 6798-A 12		
11	53033010	6	Washer GROWER DIN 127-10		
12	52101311	6	Bolt DIN 931 M10-40 8.8		
13	52202358	3	Bolt DIN 933 M12-1,25-25 8.8		
14	52102358	2	Bolt DIN 933 M12-25 8.8		
15	13814072	2	NIPPLE EYE		
16	57000361	2	Washer 10-14-1,5	01/06/2013	
17	13814070	1	Electric Fuel Feed Pump 12V		
18	51030006	2	Washer DIN 125-6		
19	52102154	2	Bolt DIN 933 M6-10 8.8		
20	51086015	1	One Ear Clamp With Interior Ring		
21	13814012	1	Pipe	25/09/2007	
NS	58088284	1	Pastic Cable Zip Tie [NS]	05/06/2014	
NS	60900126	1	TERMINAL [NS]		

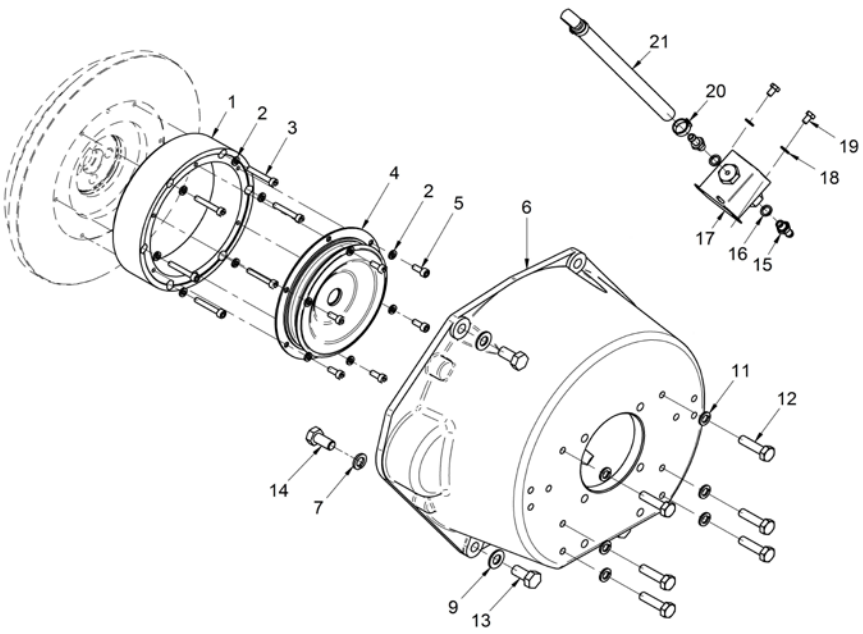

[NS] Not shown

Kit Gearbox

	13410110		Kit S-Drive VOLVO 110S		
FIG.	REF.	QTY	DESCR.	FROM	UPTO
1	17210043	1	Suplement,Flywheel		
2	13810013	1	Coupling,Drive		
3	53033006	8	Washer GROWER DIN 127-6		
4	52101171	6	Bolt DIN 931 M6-90 8.8		
5	13410021	1	Adaptor Flange M-34		
6	53033012	3	Washer GROWER DIN 127-12		
7	52202359	1	Bolt DIN 933 M12-1,25-30 8.8		
8	52202361	1	Bolt DIN 933 M12-1,25-40 8.8		
9	13810016	1	Spacer,VOLVO Stern Drive ADAP.110S		
10	53033010	12	Washer GROWER DIN 127-10		
11	52103309	6	Bolt DIN 912 M10-30 8.8		
12	52101311	6	Bolt DIN 931 M10-40 8.8		
13	52202358	3	Bolt DIN 933 M12-1,25-25 8.8		
14	53038012	5	Washer DIN 6798-A 12		
15	52102358	2	Bolt DIN 933 M12-25 8.8		
16	13814070	1	Electric Fuel Feed Pump 12V		
17	13814012	1	Pipe	25/09/2007	
18	51086015	1	One Ear Clamp With Interior Ring		
19	13814072	2	NIPPLE EYE		
20	57000361	2	Washer 10-14-1,5	01/06/2013	
21	52102154	2	Bolt DIN 933 M6-10 8.8		
22	51030006	2	Washer DIN 125-6		
NS	60900126	1	TERMINAL [NS]		

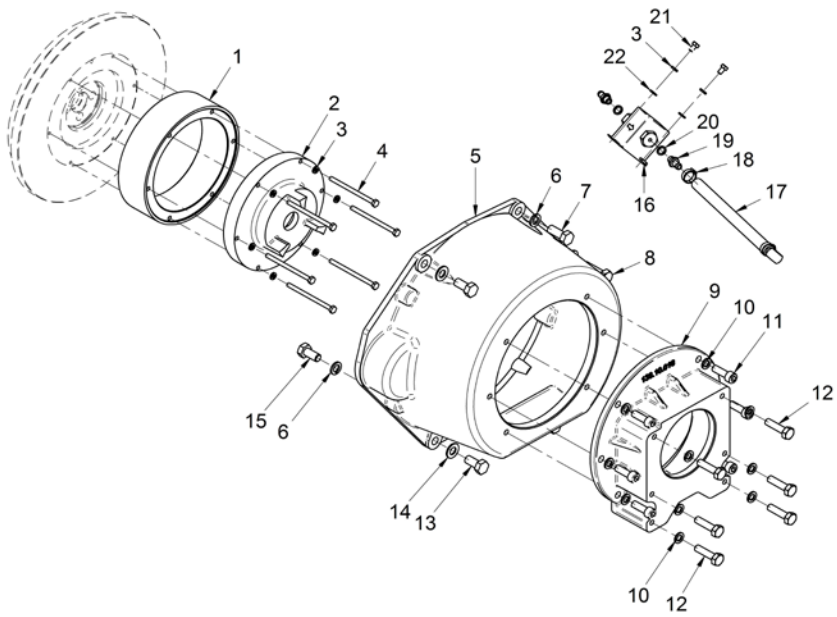

[NS] Not shown

Kit Gearbox

13432100			Kit SDRIVE SELVA		
FIG.	**REF.**	**QTY**	**DESCR.**	**FROM**	**UPTO**
1	17310070	1	Flexible Coupling Type A D. 185	08/02/2013	
2	53033006	7	Washer GROWER DIN 127-6		
3	52102156	6	Bolt DIN 933 M6-16 8.8		
4	52102258	6	Bolt DIN 933 M8-25 8.8	12/03/2015	
5	53038008	6	Washer DIN 6798-A 8		
6	22510011	1	Adaptor Flange		
8	53033012	2	Washer GROWER DIN 127-12		
9	52202361	3	Bolt DIN 933 M12-1,25-40 8.8		
10	53038012	5	Washer DIN 6798-A 12		
11	52120012	2	Nut DIN 934 M12 8.8		
12	52101363	2	Bolt DIN 931 M12-50 8.8		
13	13814070	1	Electric Fuel Feed Pump 12V		
14	13814072	2	NIPPLE EYE		
15	57000361	2	Washer 10-14-1,5	01/06/2013	
16	51030006	2	Washer DIN 125-6		
17	52102154	2	Bolt DIN 933 M6-10 8.8		
18	51086015	1	One Ear Clamp With Interior Ring		
19	13014015	1	Pipe		
NS	58088283	2	Pastic Cable Zip Tie [NS]	27/02/2014	
NS	60900126	1	TERMINAL [NS]		

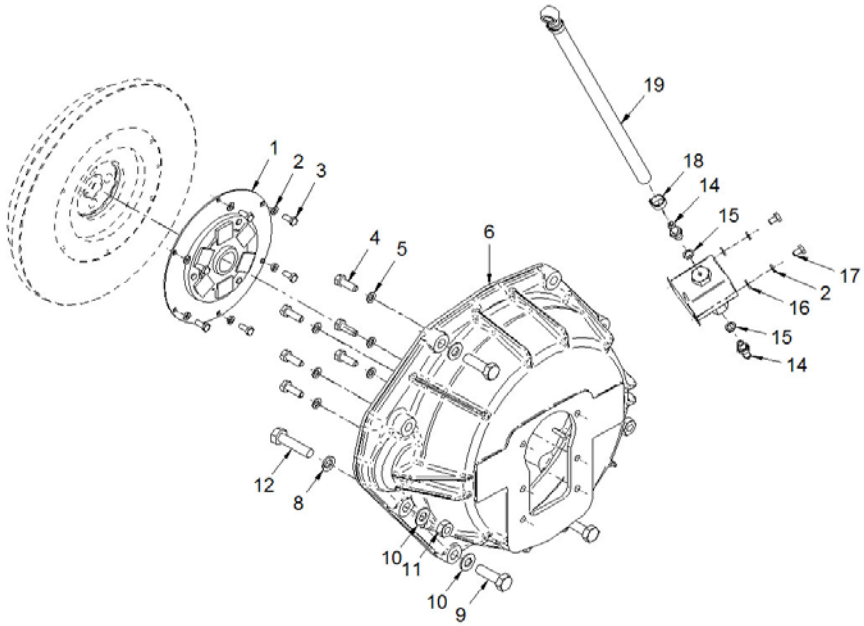

[NS] Not shown

Kit Gearbox

17210006			Kit GearBox RONIM-5		
FIG.	**REF.**	**QTY**	**DESCR.**	**FROM**	**UPTO**
1	17310070	1	Flexible Coupling Type A D. 185	08/02/2013	
2	53033006	8	Washer GROWER DIN 127-6		
3	52102156	6	Bolt DIN 933 M6-16 8.8		
4	13114002	1	Gasket		
5	13814005	1	Pump Assy, Fuel Feed		
6	53038008	2	Washer DIN 6798-A 8		
7	52103257	2	Bolt DIN 912 M8-20 8.8		
8	54081008	1	Clamp DIN 3017 8-16 W4		
9	13814010	1	Pipe, Fuel		
10	17210002	2	REAR Bracket		
11	52102309	6	Bolt DIN 933 M10-30 8.8		
12	53033010	6	Washer GROWER DIN 127-10		
13	52202361	3	Bolt DIN 933 M12-1,25-40 8.8		
14	53038012	5	Washer DIN 6798-A 12		
15	52120012	2	Nut DIN 934 M12 8.8		
16	53033012	2	Washer GROWER DIN 127-12		
17	52101363	2	Bolt DIN 931 M12-50 8.8		
NS	58088283	2	Pastic Cable Zip Tie [NS]	27/02/2014	

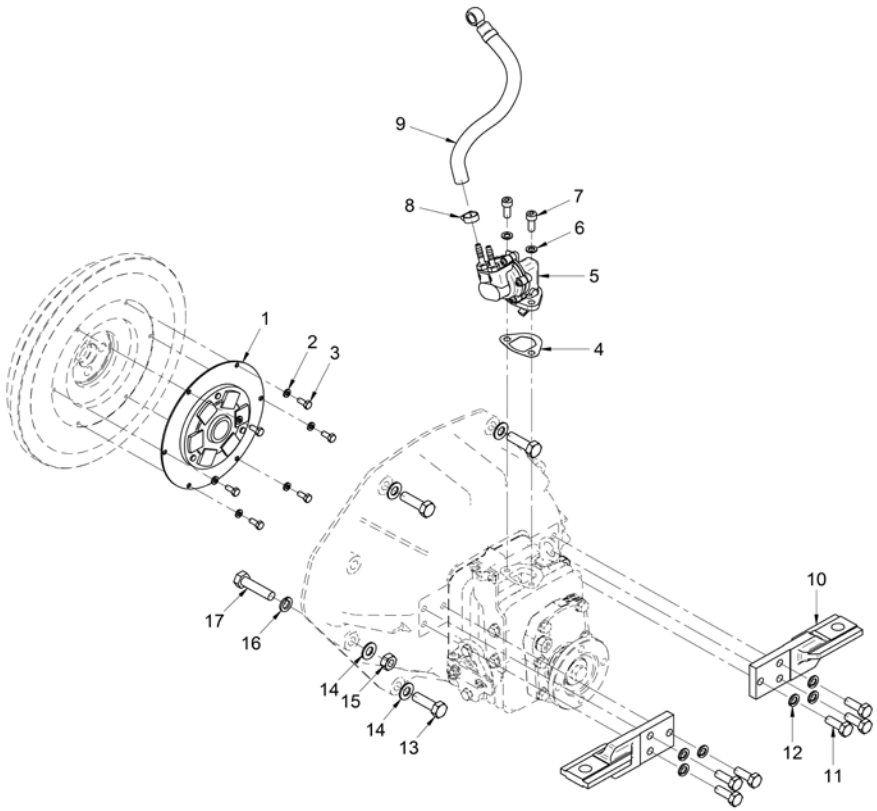

[NS] Not shown

Kit Gearbox

17210100.1			Kit Z-Drive Volvo 270/280/290 Z=10		
FIG.	**REF.**	**QTY**	**DESCR.**	**FROM**	**UPTO**
1	17222027.1	1	Flywheel		
2	17210071	1	Flexible Coupling Type B SAE 6"1/2		
3	53038008	6	Washer DIN 6798-A 8		
4	52102257	6	Bolt DIN 933 M8-20 8.8		
5	13410018	1	SAE 7,adaptor flange		
6	53033012	3	Washer GROWER DIN 127-12		
7	52202360	1	Bolt DIN 933 M12-1,25-35 8.8		
8	52202361	1	Bolt DIN 933 M12-1,25-40 8.8		
9	17210100.1R	1	Kit Z-Drive Volvo 270/280/290 Z=10		
10	53038010	6	Washer DIN 6798-A 10		
11	52102309	6	Bolt DIN 933 M10-30 8.8		
12	52202359	3	Bolt DIN 933 M12-1,25-30 8.8		
13	53038012	4	Washer DIN 6798-A 12		
14	52102358	2	Bolt DIN 933 M12-25 8.8		
15	13814072	2	NIPPLE EYE		
16	57000361	2	Washer 10-14-1,5		
17	13814070	1	Electric Fuel Feed Pump 12V		
18	51030006	2	Washer DIN 125-6		
19	53033006	2	Washer GROWER DIN 127-6		
20	52102155	2	Bolt DIN 933 M6-12 8.8		
21	13814012	1	Pipe		
22	60900126	1	TERMINAL		
23	58088283	2	Pastic Cable Zip Tie		

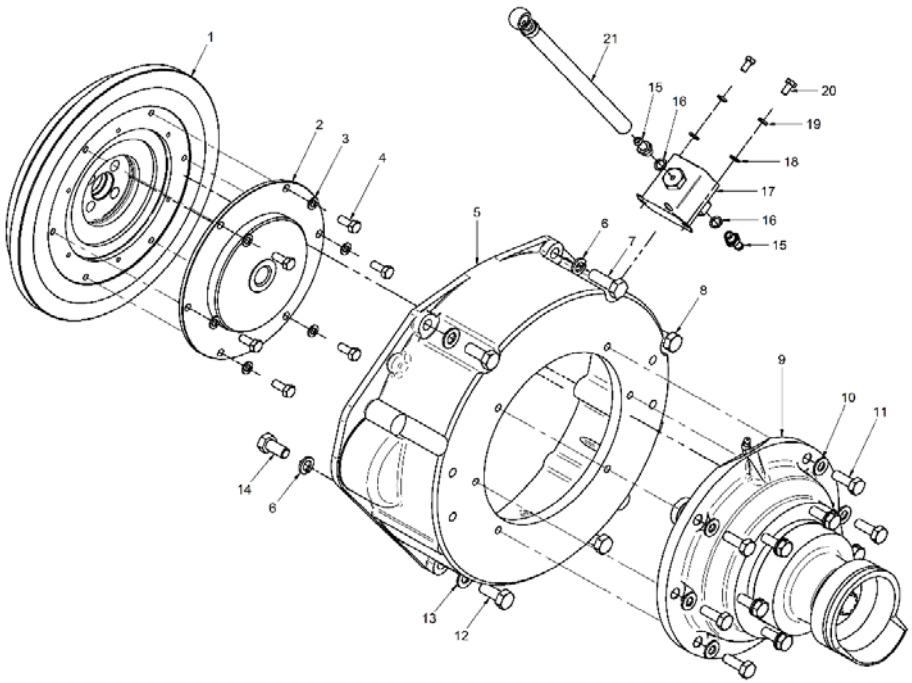

Kit Gearbox

17210105			Kit GearBox VOLVO MS-2 & MS-2B		
FIG.	**REF.**	**QTY**	**DESCR.**	**FROM**	**UPTO**
1	17222027.2	1	Flywheel		
2	13810042	1	Flexible Coupling Type F D. 175 VULKAN		
3	53033006	8	Washer GROWER DIN 127-6		
4	52102156	6	Bolt DIN 933 M6-16 8.8		
6	51030012	1	Washer DIN 125-12		
7	17214022	1	Bracket, Pipe		
8	15217010	1	Bracket,wirings		
9	52202360	1	Bolt DIN 933 M12-1,25-35 8.8		
9	53033012	8	Washer GROWER DIN 127-12		
10	52202361	1	Bolt DIN 933 M12-1,25-40 8.8		
11	17010003	1	Bracket		
12	52102359	4	Bolt DIN 933 M12-30 8.8		
13	53038010	6	Washer DIN 6798-A 10		
14	52102309	6	Bolt DIN 933 M10-30 8.8		
15	52202359	3	Bolt DIN 933 M12-1,25-30 8.8		
16	53038012	4	Washer DIN 6798-A 12		
17	17010004	1	Bracket		
18	13410016	1	VOLVO S-120,adaptor flange		
19	52102358	2	Bolt DIN 933 M12-25 8.8		
20	13814070	1	Electric Fuel Feed Pump 12V		
21	54081008	1	Clamp DIN 3017 8-16 W4		
22	13814012	1	Pipe	25/09/2007	
23	52102154	2	Bolt DIN 933 M6-10 8.8		
24	51030006	2	Washer DIN 125-6		
25	57000361	2	Washer 10-14-1,5	01/06/2013	
26	13814072	2	NIPPLE EYE		
NS	58088282	2	Pastic Cable Zip Tie [NS]	17/01/2014	
NS	60900126	1	TERMINAL [NS]		

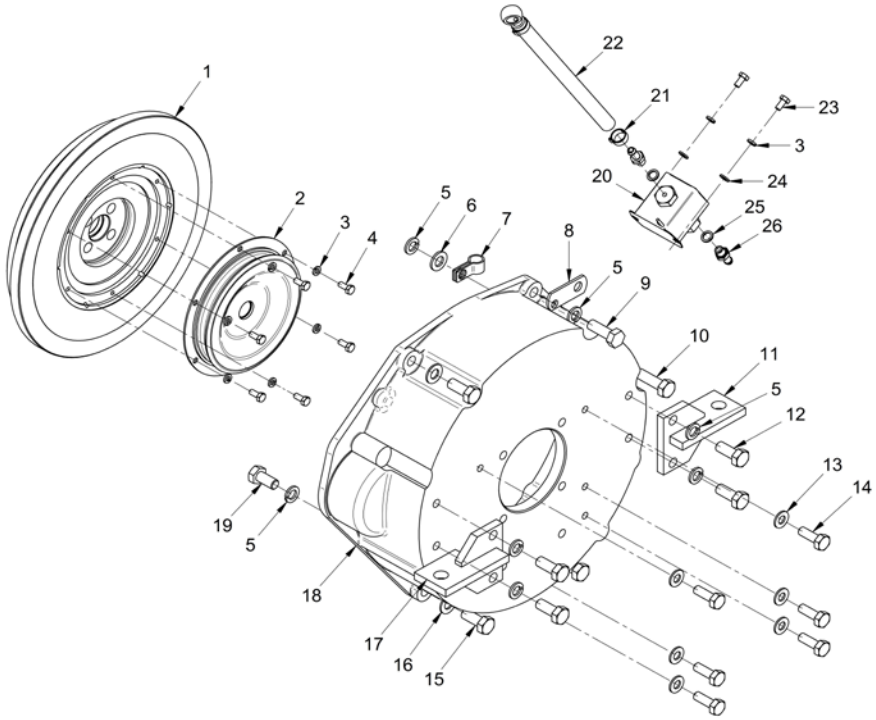

[NS] Not shown

Kit Gearbox

17210106			Kit S-Drive VOLVO 130S		
FIG.	**REF.**	**QTY**	**DESCR.**	**FROM**	**UPTO**
1	17210018	1	Suplement,Flywheel	15/06/2016	
2	52103161	6	Bolt DIN 912 M6-40 8.8	15/06/2016	
3	17310070	1	Flexible Coupling Type A D. 185	15/06/2016	
4	53033006	8	Washer GROWER DIN 127-6	15/06/2016	
5	52102156	6	Bolt DIN 933 M6-16 8.8	15/06/2016	
6	13410022	1	Adaptor Flange M-34	15/06/2016	
7	53033012	2	Washer GROWER DIN 127-12	15/06/2016	
8	53038012	3	Washer DIN 6798-A 12	15/06/2016	
9	52101311	6	Bolt DIN 931 M10-40 8.8	15/06/2016	
10	53033010	6	Washer GROWER DIN 127-10	15/06/2016	
11	52202358	3	Bolt DIN 933 M12-1,25-25 8.8	15/06/2016	
12	52102358	2	Bolt DIN 933 M12-25 8.8	15/06/2016	
13	13814070	1	Electric Fuel Feed Pump 12V	15/06/2016	
14	13814012	1	Pipe	15/06/2016	
15	51086015	1	One Ear Clamp With Interior Ring	15/06/2016	
16	13814072	2	NIPPLE EYE	15/06/2016	
17	57000361	2	Washer 10-14-1,5	15/06/2016	
18	52102154	2	Bolt DIN 933 M6-10 8.8	15/06/2016	
19	51030006	2	Washer DIN 125-6	15/06/2016	
NS	58088284	1	Pastic Cable Zip Tie [NS]	15/06/2016	
NS	60900126	1	TERMINAL [NS]	15/06/2016	

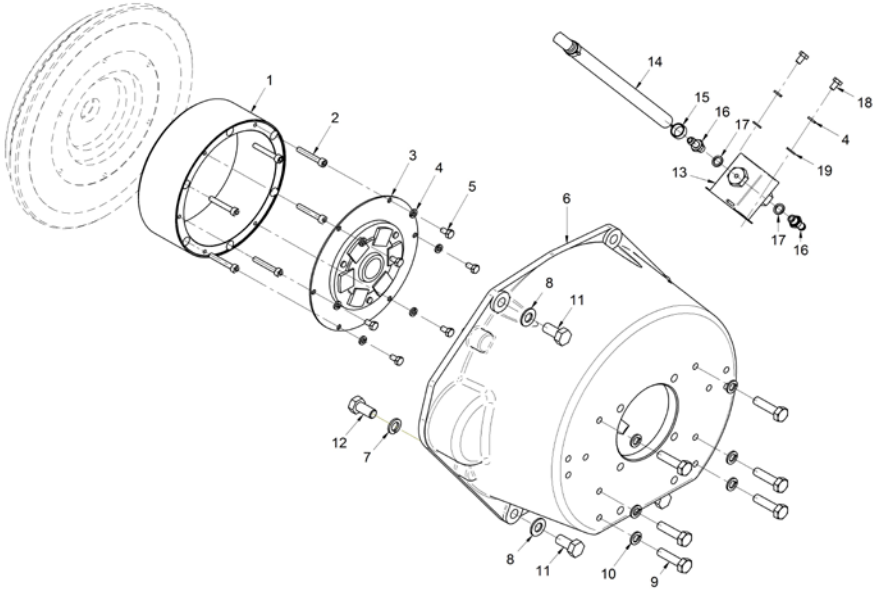

[NS] Not shown

Kit Gearbox

17210110.1			Kit Z-Drive Volvo 280/290 Z=26		
FIG.	**REF.**	**QTY**	**DESCR.**	**FROM**	**UPTO**
1	17222027.1	1	Flywheel		
2	17210071	1	Flexible Coupling Type B SAE 6"1/2		
3	53038008	6	Washer DIN 6798-A 8		
4	52102257	6	Bolt DIN 933 M8-20 8.8		
5	13410018	1	SAE 7,adaptor flange		
6	53033012	3	Washer GROWER DIN 127-12		
7	52202360	1	Bolt DIN 933 M12-1,25-35 8.8		
8	52202361	1	Bolt DIN 933 M12-1,25-40 8.8		
9	17210110.1R	1	Kit Z-Drive Volvo 280/290 Z=26		
10	53038010	6	Washer DIN 6798-A 10		
11	52102309	6	Bolt DIN 933 M10-30 8.8		
12	52202359	3	Bolt DIN 933 M12-1,25-30 8.8		
13	53038012	4	Washer DIN 6798-A 12		
14	52102358	2	Bolt DIN 933 M12-25 8.8		
15	13814072	2	NIPPLE EYE		
16	57000361	2	Washer 10-14-1,5		
17	13814070	1	Electric Fuel Feed Pump 12V		
18	51030006	2	Washer DIN 125-6		
19	53033006	2	Washer GROWER DIN 127-6		
20	52102155	2	Bolt DIN 933 M6-12 8.8		
21	13814012	1	Pipe		
22	60900126	1	TERMINAL		
23	58088283	2	Pastic Cable Zip Tie		

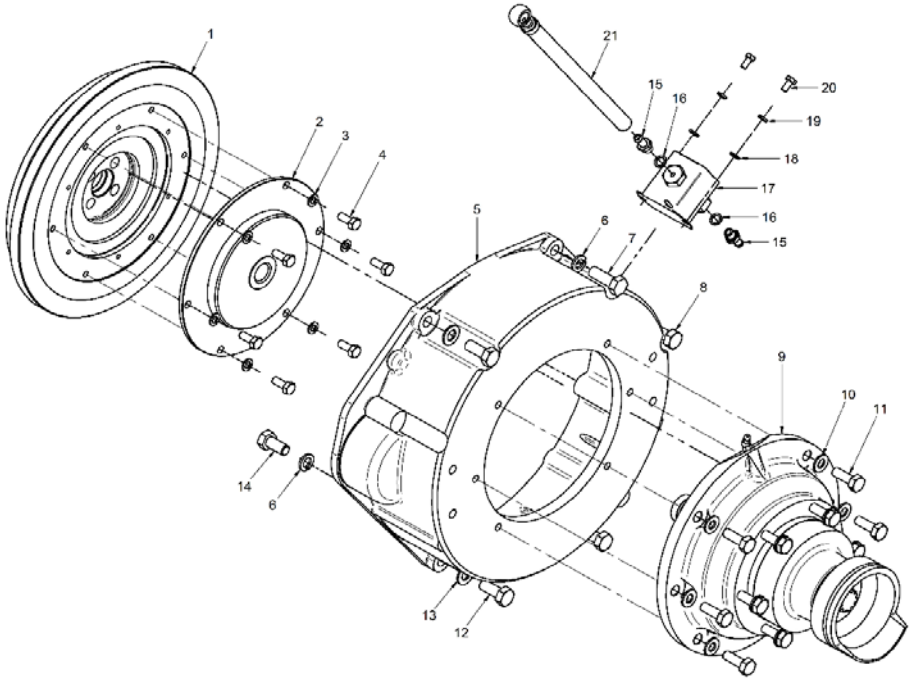

Kit Gearbox

17210125			Kit S-Drive BUKH DV20		
FIG.	**REF.**	**QTY**	**DESCR.**	**FROM**	**UPTO**
1	13810025	1	Shaft		
2	53033006	6	Washer GROWER DIN 127-6		
3	52102158	6	Bolt DIN 933 M6-25 8.8		
4	13910027	1	Washer		
5	52102309	1	Bolt DIN 933 M10-30 8.8		
6	13410018	1	SAE 7,adaptor flange		
7	53033012	2	Washer GROWER DIN 127-12		
8	52202361	3	Bolt DIN 933 M12-1,25-40 8.8		
9	13910026	1	BUKH S-Drive DV-20 Adaptor Flange		
10	53038010	13	Washer DIN 6798-A 10		
11	52102308	6	Bolt DIN 933 M10-25 8.8		
12	12110018	1	Stud		
13	53038008	1	Washer DIN 6798-A 8		
14	52120008	1	Nut DIN 934 M8 8.8		
15	52120010	6	Nut DIN 934 M10 8.8		
16	16511007	6	Stud		
17	52202359	3	Bolt DIN 933 M12-1,25-30 8.8		
18	53038012	5	Washer DIN 6798-A 12		
19	52102358	2	Bolt DIN 933 M12-25 8.8		
20	17310027	1	KEY		
21	13814070	1	Electric Fuel Feed Pump 12V		
22	13814072	2	NIPPLE EYE		
23	57000361	2	Washer 10-14-1,5	01/06/2013	
24	51030006	2	Washer DIN 125-6		
25	52102154	2	Bolt DIN 933 M6-10 8.8		
26	54081008	1	Clamp DIN 3017 8-16 W4		
27	13814012	1	Pipe	25/09/2007	
NS	58088283	2	Pastic Cable Zip Tie [NS]	27/02/2014	
NS	60900126	1	TERMINAL [NS]		

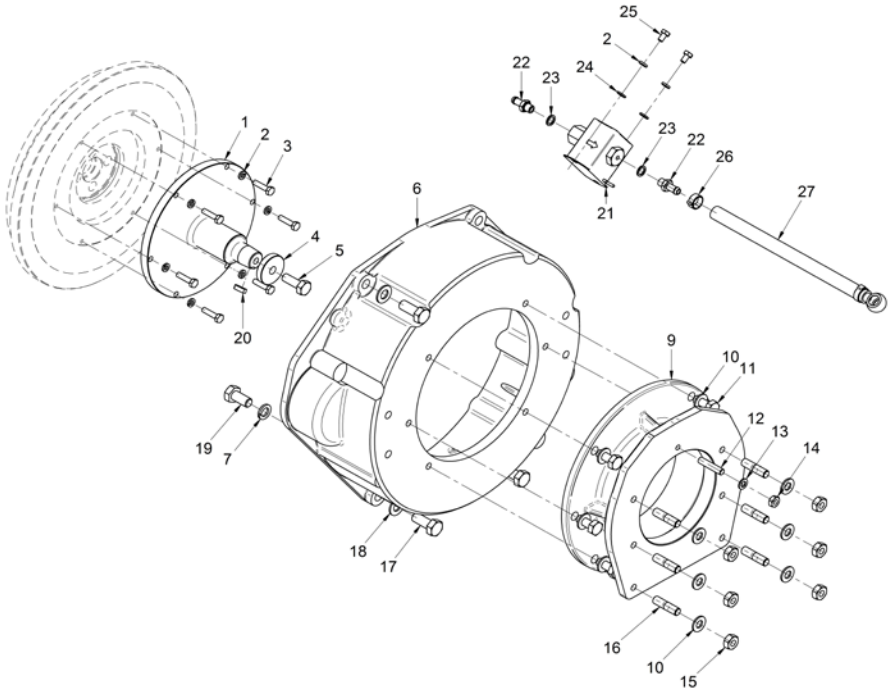

[NS] Not shown

Kit Gearbox

	17210211		Kit GearBox TM-345/A		
FIG.	**REF.**	**QTY**	**DESCR.**	**FROM**	**UPTO**
1	17222027.1	1	Flywheel		
2	17210071	1	Flexible Coupling Type B SAE 6"1/2		
3	53038008	6	Washer DIN 6798-A 8		
4	52102257	10	Bolt DIN 933 M8-20 8.8		
5	13410018	1	SAE 7,adaptor flange		
6	53033012	8	Washer GROWER DIN 127-12		
8	53038012	4	Washer DIN 6798-A 12		
10	17010003	1	Bracket		
11	52102359	4	Bolt DIN 933 M12-30 8.8		
12	53038010	6	Washer DIN 6798-A 10		
13	52102307	5	Bolt DIN 933 M10-20 8.8		
14	24810913	1	Clamp,CABLE		
15	51030005	2	Washer DIN 125-5		
16	18619020	1	Bracket,Gear box control	02/10/2004	
17	51030008	6	Washer DIN 125-8		
18	53033008	6	Washer GROWER DIN 127-8		
19	52102256	2	Bolt DIN 933 M8-15 8.8		
20	51051107	1	Pin DIN-94 1,6-16		
21	ALLPA.93	1	Coupling,cable	23/05/2017	
21	14719115	1	Coupling,cable		23/05/2017
22	17010004	1	Bracket		
23	52202359	3	Bolt DIN 933 M12-1,25-30 8.8		
24	52102358	2	Bolt DIN 933 M12-25 8.8		
25	13814070	1	Electric Fuel Feed Pump 12V		
26	13814012	1	Pipe	25/09/2007	
27	51086015	1	One Ear Clamp With Interior Ring		
27	54081020	8	Clamp DIN 3017 20-32/9 W4		
28	51030006	5	Washer DIN 125-6		
29	53033006	2	Washer GROWER DIN 127-6		
30	52102154	2	Bolt DIN 933 M6-10 8.8		
31	57000361	2	Washer 10-14-1,5	01/06/2013	
32	13814072	2	NIPPLE EYE		
33	59072604	2	Clamp	29/03/2014	
34	14712015	2	Bolt,Coupling pipe oil		
35	57000375	4	Washer 17-22-1,5		

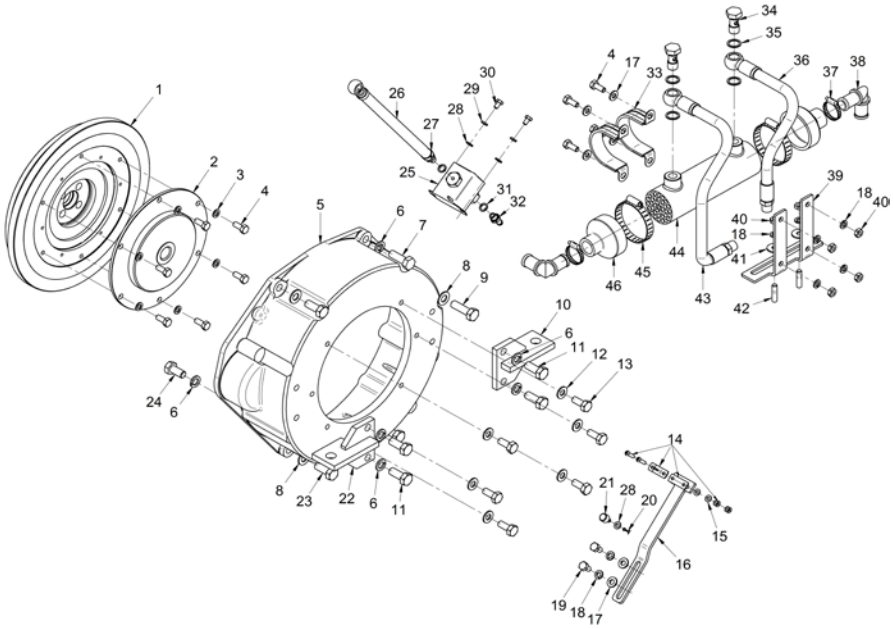

[NS] Not shown

Kit Gearbox

17210211			Kit GearBox TM-345/A		
FIG.	**REF.**	**QTY**	**DESCR.**	**FROM**	**UPTO**
38	19421058.1	2	Elbow		
39	18012041	1	Bracket,TM93/170 oil cooler		
40	52120008	6	Nut DIN 934 M8 8.8		
41	51031008	2	Washer DIN 9021 8		
42	12120018	2	Stud		
43	17012024	2	Pipe		
44	14712051	1	Cooler,oil		
45	54082050	2	Clamp DIN 3017 50-70/12 W4		
46	15212007	2	Cover, water cooler D.22		
NS	13211027	1	Water Inlet Bend [NS]		
NS	13811002	1	Cover, water cooler [NS]		
NS	17011028	1	Pipe [NS]		
NS	17611017	3	Rubber Elbow [NS]		
NS	58088283	2	Pastic Cable Zip Tie [NS]	27/02/2014	
NS	60900126	1	TERMINAL [NS]		

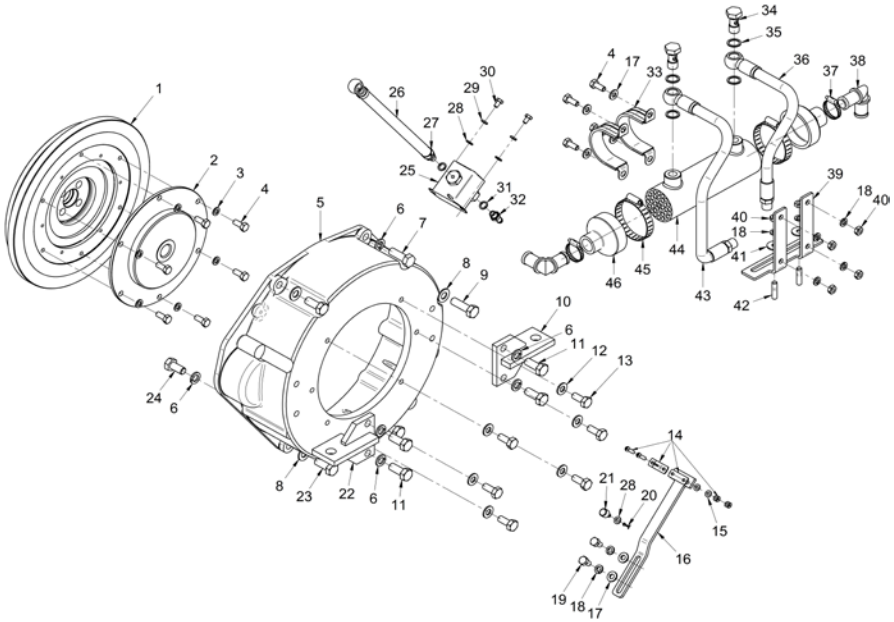

Kit Gearbox

17210212			Kit GearBox TM-345A (Without Cooler)		
FIG.	REF.	QTY	DESCR.	FROM	UPTO
1	17222027.1	1	Flywheel		
2	17210071	1	Flexible Coupling Type B SAE 6"1/2		
3	53038008	6	Washer DIN 6798-A 8		
4	52102257	6	Bolt DIN 933 M8-20 8.8		
5	13410018	1	SAE 7,adaptor flange		
6	53033012	8	Washer GROWER DIN 127-12		
7	52202360	1	Bolt DIN 933 M12-1,25-35 8.8		
8	53038012	4	Washer DIN 6798-A 12		
9	52202361	1	Bolt DIN 933 M12-1,25-40 8.8		
10	17010003	1	Bracket		
12	52102307	5	Bolt DIN 933 M10-20 8.8		
13	52102359	4	Bolt DIN 933 M12-30 8.8		
14	17010004	1	Bracket		
15	52202359	3	Bolt DIN 933 M12-1,25-30 8.8		
16	52102358	2	Bolt DIN 933 M12-25 8.8		
17	13814070	1	Electric Fuel Feed Pump 12V		
18	13814012	1	Pipe	25/09/2007	
19	54081008	1	Clamp DIN 3017 8-16 W4		
20	52102154	2	Bolt DIN 933 M6-10 8.8		
21	53033006	2	Washer GROWER DIN 127-6		
22	51030006	2	Washer DIN 125-6		
23	57000361	2	Washer 10-14-1,5	01/06/2013	
24	13814072	2	NIPPLE EYE		
NS	13211035	1	Exhaust Manifold Outlet Bend [NS]		
NS	17611017	1	Rubber Elbow [NS]		
NS	54081020	2	Clamp DIN 3017 20-32/9 W4 [NS]		
NS	58088282	2	Pastic Cable Zip Tie [NS]	17/01/2014	
NS	60900126	1	TERMINAL [NS]		

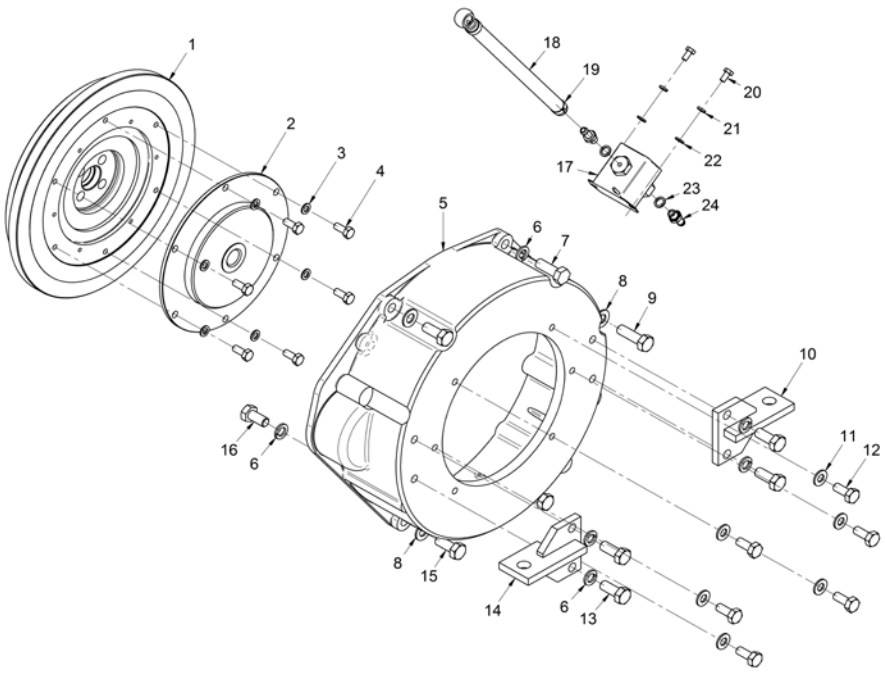

[NS] Not shown

Kit Gearbox

17210213			Kit PRM DELTA Adap.BW Without OilCooler		
FIG.	**REF.**	**QTY**	**DESCR.**	**FROM**	**UPTO**
1	17222027.1	1	Flywheel		
2	17210072	1	Flexible Coupling Type E SAE 6"1/2 PRM		
3	53038008	6	Washer DIN 6798-A 8		
4	52102257	6	Bolt DIN 933 M8-20 8.8		
5	13410018	1	SAE 7,adaptor flange		
6	53033012	8	Washer GROWER DIN 127-12		
7	52202361	3	Bolt DIN 933 M12-1,25-40 8.8		
8	17010003	1	Bracket		
9	52102359	4	Bolt DIN 933 M12-30 8.8		
12	17010004	1	Bracket		
13	52202359	3	Bolt DIN 933 M12-1,25-30 8.8		
14	53038012	5	Washer DIN 6798-A 12		
15	52102358	2	Bolt DIN 933 M12-25 8.8		
16	13814070	1	Electric Fuel Feed Pump 12V		
17	13814072	2	NIPPLE EYE		
18	57000361	2	Washer 10-14-1,5	01/06/2013	
19	51030006	2	Washer DIN 125-6		
20	53033006	2	Washer GROWER DIN 127-6		
21	52102154	2	Bolt DIN 933 M6-10 8.8		
22	54081008	1	Clamp DIN 3017 8-16 W4		
23	13814012	1	Pipe		
NS	M87501927	1	Water Intake Hose (HQ) D. 19-27 [NS]		
NS	54081020	2	Clamp DIN 3017 20-32/9 W4 [NS]		
NS	56063022.1	2	Elbow [NS]		
NS	58088283	2	Pastic Cable Zip Tie [NS]	27/02/2014	
NS	60900126	1	TERMINAL [NS]		

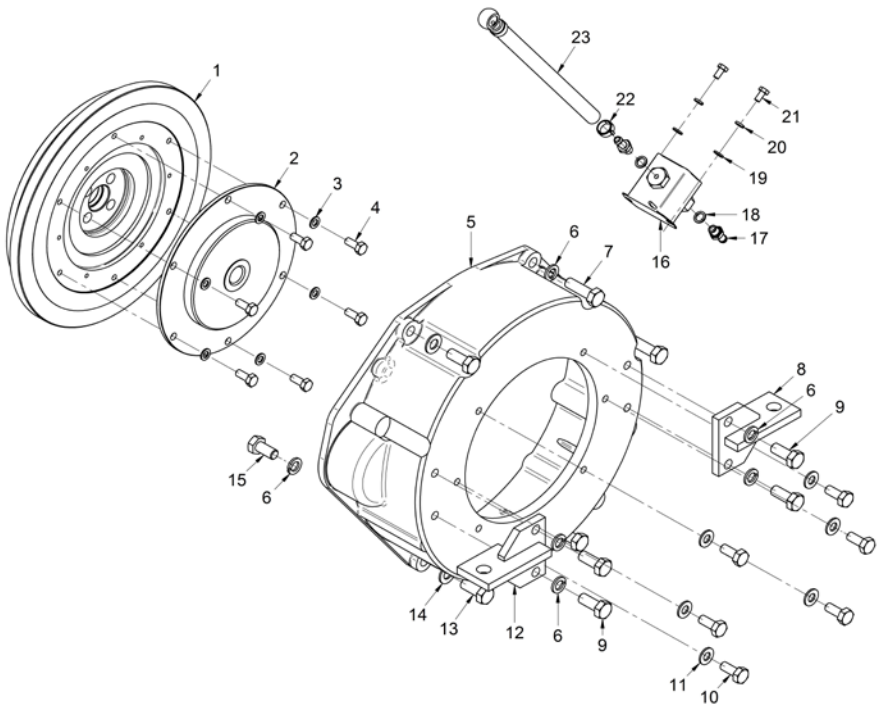

[NS] Not shown

Kit Gearbox

17210214			Kit PRM DELTA & Adapter BW & OilCooler		
FIG.	**REF.**	**QTY**	**DESCR.**	**FROM**	**UPTO**
1	17222027.1	1	Flywheel		
2	17210072	1	Flexible Coupling Type E SAE 6"1/2 PRM		
3	53038008	6	Washer DIN 6798-A 8		
4	52102257	6	Bolt DIN 933 M8-20 8.8		
5	13410018	1	SAE 7,adaptor flange		
6	53033012	8	Washer GROWER DIN 127-12		
7	52202361	3	Bolt DIN 933 M12-1,25-40 8.8		
8	17010003	1	Bracket		
9	52102359	4	Bolt DIN 933 M12-30 8.8		
12	17010004	1	Bracket		
13	52202359	3	Bolt DIN 933 M12-1,25-30 8.8		
14	53038012	5	Washer DIN 6798-A 12		
15	13814072	2	NIPPLE EYE		
15	52102358	2	Bolt DIN 933 M12-25 8.8		
16	13814070	1	Electric Fuel Feed Pump 12V		
18	57000361	2	Washer 10-14-1,5	01/06/2013	
19	51030006	2	Washer DIN 125-6		
20	53033006	2	Washer GROWER DIN 127-6		
21	52102154	2	Bolt DIN 933 M6-10 8.8		
22	54081008	1	Clamp DIN 3017 8-16 W4		
23	13814012	1	Pipe		
24	14712051	1	Cooler,oil		
25	54082050	2	Clamp DIN 3017 50-70/12 W4		
26	15212007	2	Cover, water cooler D.22		
27	54081020	4	Clamp DIN 3017 20-32/9 W4		
28	56063022.1	2	Elbow		
NS	M87501927	1	Water Intake Hose (HQ) D. 19-27 [NS]		
NS	58088283	2	Pastic Cable Zip Tie [NS]	27/02/2014	
NS	60900126	1	TERMINAL [NS]		

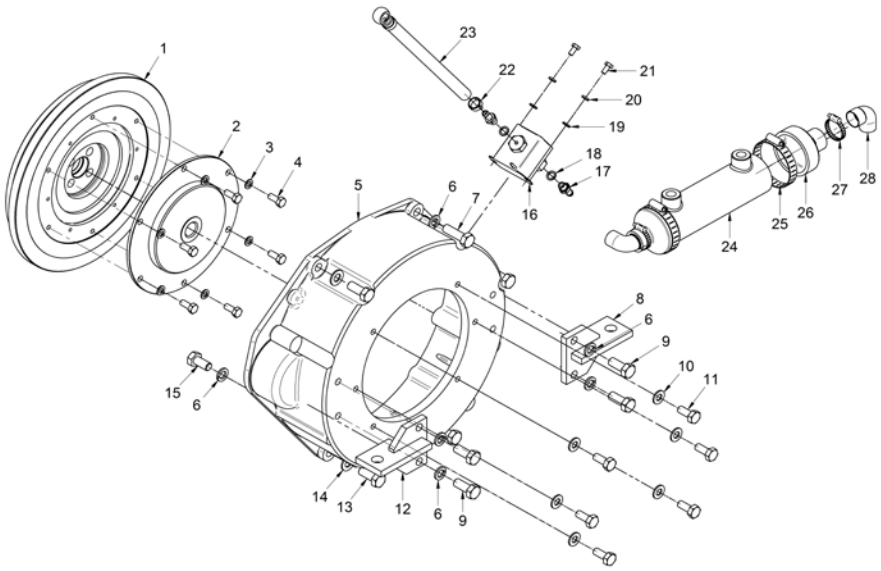

[NS] Not shown

Kit Gearbox

17210220			Kit GearBox BW (Without Oil Cooler)		
FIG.	**REF.**	**QTY**	**DESCR.**	**FROM**	**UPTO**
1	17222027.1	1	Flywheel		
2	17210071	1	Flexible Coupling Type B SAE 6"1/2		
3	53038008	6	Washer DIN 6798-A 8		
4	52102257	6	Bolt DIN 933 M8-20 8.8		
5	13410018	1	SAE 7,adaptor flange		
6	53033012	8	Washer GROWER DIN 127-12		
7	52202361	3	Bolt DIN 933 M12-1,25-40 8.8		
8	53038012	5	Washer DIN 6798-A 12		
9	17010003	1	Bracket		
10	52102359	4	Bolt DIN 933 M12-30 8.8		
11	17010004	1	Bracket		
12	52202359	3	Bolt DIN 933 M12-1,25-30 8.8		
13	52102358	2	Bolt DIN 933 M12-25 8.8		
14	13814070	1	Electric Fuel Feed Pump 12V		
15	13814012	1	Pipe	25/09/2007	
16	54081008	1	Clamp DIN 3017 8-16 W4		
17	52102154	2	Bolt DIN 933 M6-10 8.8		
18	53033006	2	Washer GROWER DIN 127-6		
19	51030006	2	Washer DIN 125-6		
20	57000361	2	Washer 10-14-1,5	01/06/2013	
21	13814072	2	NIPPLE EYE		
NS	58088283	2	Pastic Cable Zip Tie [NS]	27/02/2014	
NS	60900126	1	TERMINAL [NS]		

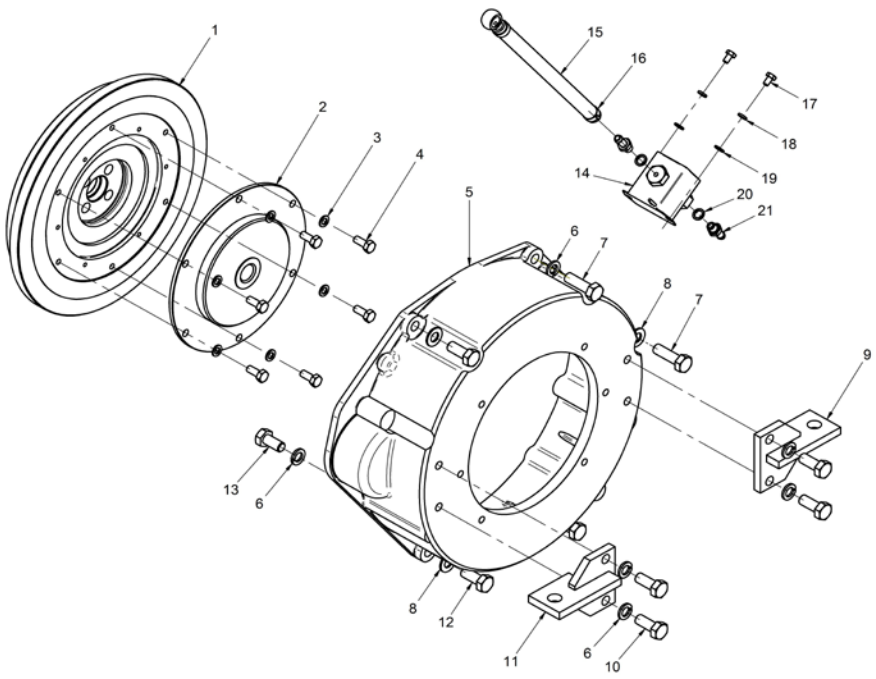

[NS] Not shown

Kit Gearbox

17210225			Kit GearBox PRM-160 SAE 7		
FIG.	**REF.**	**QTY**	**DESCR.**	**FROM**	**UPTO**
1	17222027.1	1	Flywheel		
2	17010072	1	Flexible Coupling T. E SAE 6"1/2 PRM160		
3	53033008	6	Washer GROWER DIN 127-8		
4	52102256	6	Bolt DIN 933 M8-15 8.8		
5	13410018	1	SAE 7,adaptor flange		
6	53033012	7	Washer GROWER DIN 127-12		
7	52202361	3	Bolt DIN 933 M12-1,25-40 8.8		
8	17010003	1	Bracket		
9	52102359	4	Bolt DIN 933 M12-30 8.8		
10	24220021	1	PRM160,BW adaptor flange		
11	53033010	6	Washer GROWER DIN 127-10		
12	52102308	6	Bolt DIN 933 M10-25 8.8		
13	17010004	1	Bracket		
14	52202359	3	Bolt DIN 933 M12-1,25-30 8.8		
15	53038012	5	Washer DIN 6798-A 12		
16	52102358	2	Bolt DIN 933 M12-25 8.8		
17	13814070	1	Electric Fuel Feed Pump 12V		
18	13814072	2	NIPPLE EYE		
19	57000361	2	Washer 10-14-1,5	01/06/2013	
20	51030006	2	Washer DIN 125-6		
21	53033006	2	Washer GROWER DIN 127-6		
22	52102154	2	Bolt DIN 933 M6-10 8.8		
23	54081008	1	Clamp DIN 3017 8-16 W4		
24	13814010	1	Pipe, Fuel		
NS	58088283	2	Pastic Cable Zip Tie [NS]	27/02/2014	
NS	60900126	1	TERMINAL [NS]		

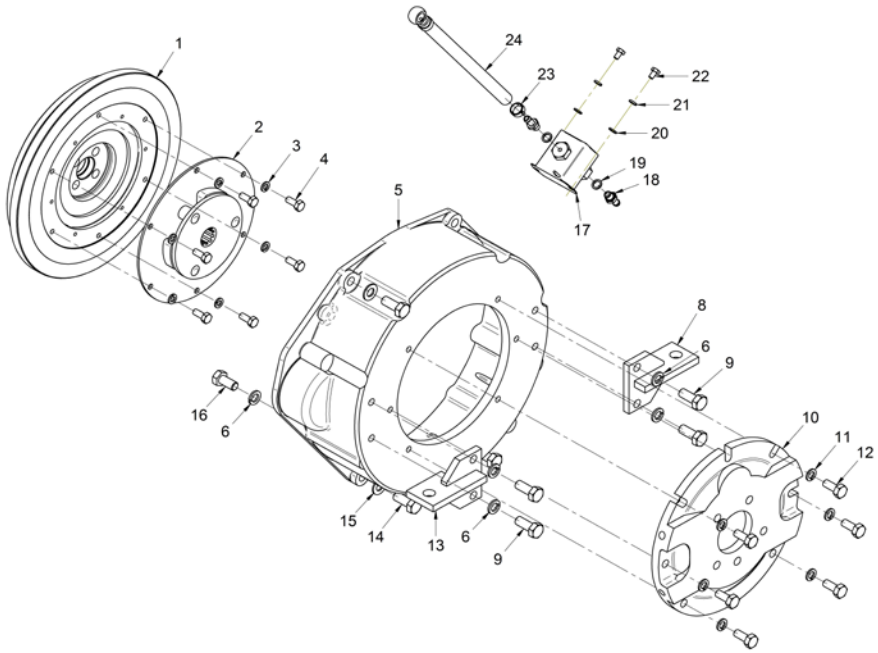

[NS] Not shown

Kit Gearbox

17210230			Kit GearBox HURTH-150A,ZF 15M IV		
FIG.	REF.	QTY	DESCR.	FROM	UPTO
1	17310070	1	Flexible Coupling Type A D. 185	08/02/2013	
2	53033006	10	Washer GROWER DIN 127-6		
3	52102156	6	Bolt DIN 933 M6-16 8.8		
4	52101310	6	Bolt DIN 931 M10-35 8.8		
5	53038010	6	Washer DIN 6798-A 10		
6	17210012	1	Bell Housing,REV.HURTH 150V		
7	53033012	3	Washer GROWER DIN 127-12		
8	52202361	3	Bolt DIN 933 M12-1,25-40 8.8		
9	17210026	2	Rear Bracket	23/09/2014	
10	53033010	6	Washer GROWER DIN 127-10		
11	52102309	6	Bolt DIN 933 M10-30 8.8		
12	53038012	5	Washer DIN 6798-A 12		
13	52120012	2	Nut DIN 934 M12 8.8		
14	52101363	2	Bolt DIN 931 M12-50 8.8		
15	13814070	1	Electric Fuel Feed Pump 12V		
16	13814072	2	NIPPLE EYE		
17	57000361	2	Washer 10-14-1,5	01/06/2013	
18	52102154	2	Bolt DIN 933 M6-10 8.8		
19	51030006	6	Washer DIN 125-6		
20	51086015	1	One Ear Clamp With Interior Ring		
21	13814012	1	Pipe	25/09/2007	
22	ALLPA.93	1	Coupling,cable	23/05/2017	
22	14719115	1	Coupling,cable		23/05/2017
23	51051107	1	Pin DIN-94 1,6-16		
24	52120008	2	Nut DIN 934 M8 8.8		
25	53033008	2	Washer GROWER DIN 127-8		
26	51030008	2	Washer DIN 125-8		
27	24610901	1	Bracket, GearBox Control		
28	51030005	2	Washer DIN 125-5		
29	24810913	1	Clamp,CABLE		
NS	58088283	2	Pastic Cable Zip Tie [NS]	27/02/2014	
NS	58088284	1	Pastic Cable Zip Tie [NS]	05/06/2014	
NS	60900126	1	TERMINAL [NS]		

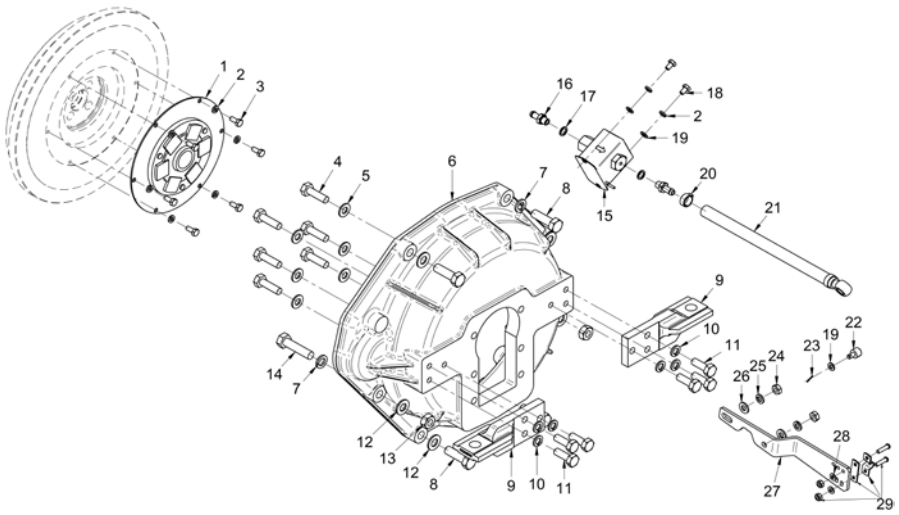

[NS] Not shown

Kit Gearbox

17210241			Kit GearBox TMC-60/60A		
FIG.	REF.	QTY	DESCR.	FROM	UPTO
1	17310070	1	Flexible Coupling Type A D. 185	08/02/2013	
2	53033006	6	Washer GROWER DIN 127-6		
3	52102156	6	Bolt DIN 933 M6-16 8.8		
4	52101259	6	Bolt DIN 931 M8-30 8.8		
5	53038008	6	Washer DIN 6798-A 8		
6	17210009	1	Bell Housing,GearBox		
7	17210026	2	Rear Bracket	23/09/2014	
8	53033010	6	Washer GROWER DIN 127-10		
9	52102309	6	Bolt DIN 933 M10-30 8.8		
10	24880901	1	Bracket, GearBox Control		
11	51030005	2	Washer DIN 125-5		
12	24810913	1	Clamp,CABLE		
13	51051107	1	Pin DIN-94 1,6-16		
14	51030006	5	Washer DIN 125-6		
15	ALLPA.93	1	Coupling,cable	23/05/2017	
15	14719115	1	Coupling,cable		23/05/2017
16	51030008	2	Washer DIN 125-8	19/11/2013	
17	53033008	2	Washer GROWER DIN 127-8	19/11/2013	
18	52102257	2	Bolt DIN 933 M8-20 8.8	10/07/2010	
19	52202361	3	Bolt DIN 933 M12-1,25-40 8.8		
20	53038012	5	Washer DIN 6798-A 12		
21	52120012	2	Nut DIN 934 M12 8.8		
22	53033012	2	Washer GROWER DIN 127-12		
23	52101363	2	Bolt DIN 931 M12-50 8.8		
24	13814070	1	Electric Fuel Feed Pump 12V		
25	13814072	2	NIPPLE EYE		
26	57000361	2	Washer 10-14-1,5	01/06/2013	
27	52102154	2	Bolt DIN 933 M6-10 8.8		
28	51086015	1	One Ear Clamp With Interior Ring		
29	13814012	1	Pipe	25/09/2007	
NS	58088283	2	Pastic Cable Zip Tie [NS]	27/02/2014	
NS	60900126	1	TERMINAL [NS]		

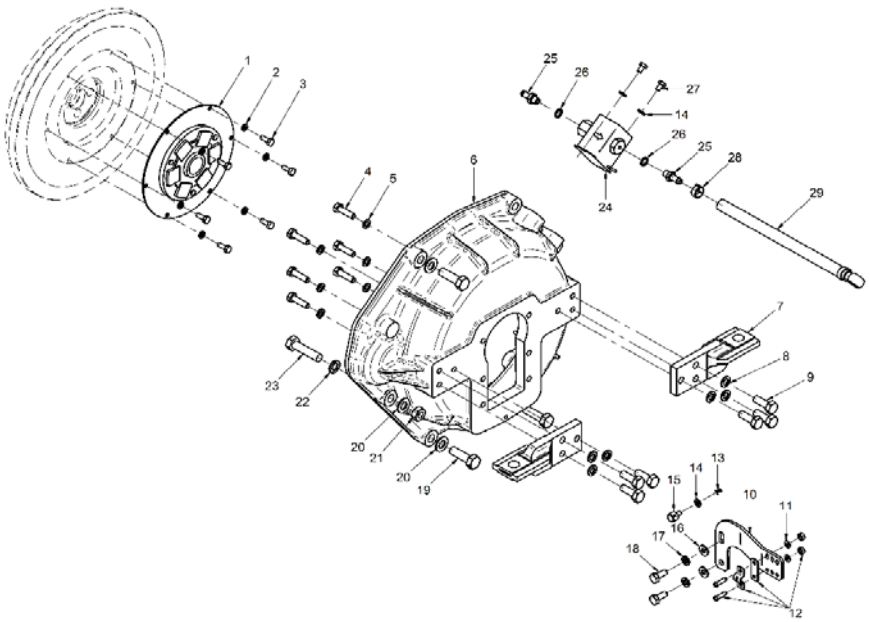

[NS] Not shown

Kit Gearbox

17210242			Kit GearBox TMC-40		
FIG.	REF.	QTY	DESCR.	FROM	UPTO
1	17310070	1	Flexible Coupling Type A D. 185	08/02/2013	
2	53033006	6	Washer GROWER DIN 127-6		
3	52102155	6	Bolt DIN 933 M6-12 8.8		
4	52101259	6	Bolt DIN 931 M8-30 8.8		
5	53038008	6	Washer DIN 6798-A 8		
6	17210009	1	Bell Housing,GearBox		
7	53033012	2	Washer GROWER DIN 127-12		
8	52202361	3	Bolt DIN 933 M12-1,25-40 8.8		
9	17210026	2	Rear Bracket	23/09/2014	
10	53033010	6	Washer GROWER DIN 127-10		
11	52102309	6	Bolt DIN 933 M10-30 8.8		
12	24810901	1	Bracket, GearBox Control		
13	51030005	2	Washer DIN 125-5		
14	24810913	1	Clamp,CABLE		
15	51030008	2	Washer DIN 125-8	19/11/2013	
16	53033008	2	Washer GROWER DIN 127-8	19/11/2013	
17	52120008	2	Nut DIN 934 M8 8.8		
18	14719115	1	Coupling,cable		
19	51030006	3	Washer DIN 125-6		
20	51051107	1	Pin DIN-94 1,6-16		
21	53038012	5	Washer DIN 6798-A 12		
22	52101363	2	Bolt DIN 931 M12-50 8.8		
23	52120012	2	Nut DIN 934 M12 8.8		
24	13814070	1	Electric Fuel Feed Pump 12V		
25	13814072	2	NIPPLE EYE		
26	57000361	2	Washer 10-14-1,5	01/06/2013	
27	52102154	2	Bolt DIN 933 M6-10 8.8		
28	51086015	1	One Ear Clamp With Interior Ring		
29	13814012	1	Pipe	25/09/2007	
NS	58088283	2	Pastic Cable Zip Tie [NS]	27/02/2014	
NS	60900126	1	TERMINAL [NS]		

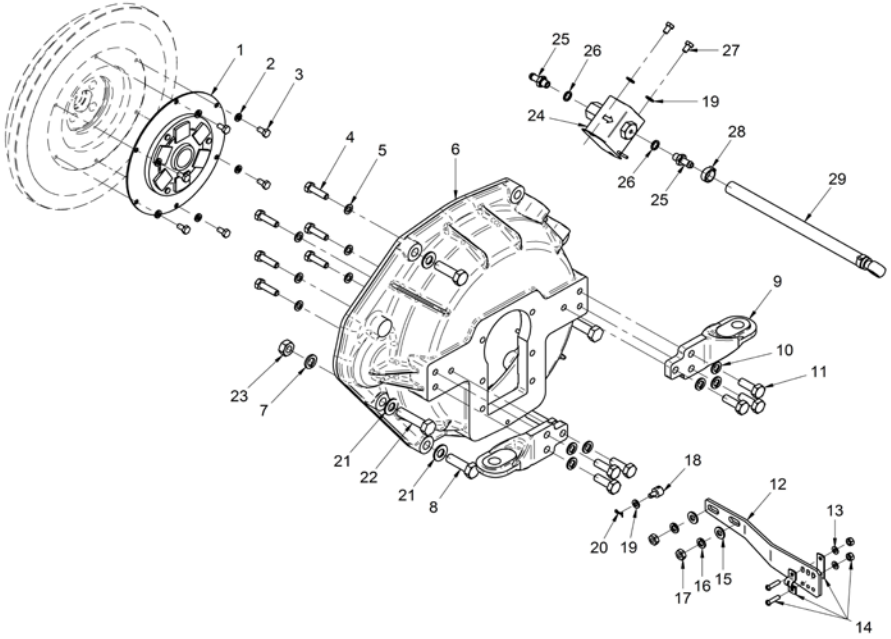

[NS] Not shown

Kit Gearbox

17210243			Kit GearBox TTMC35A2		
FIG.	**REF.**	**QTY**	**DESCR.**	**FROM**	**UPTO**
1	17310070	1	Flexible Coupling Type A D. 185	08/02/2013	
2	53033006	6	Washer GROWER DIN 127-6		
3	52102156	6	Bolt DIN 933 M6-16 8.8		
4	52101259	6	Bolt DIN 931 M8-30 8.8		
5	53038008	6	Washer DIN 6798-A 8		
6	17210009	1	Bell Housing,GearBox		
7	53033012	2	Washer GROWER DIN 127-12		
8	52202361	3	Bolt DIN 933 M12-1,25-40 8.8		
9	17210026	2	Rear Bracket	23/09/2014	
10	53033010	6	Washer GROWER DIN 127-10		
11	52102309	6	Bolt DIN 933 M10-30 8.8		
12	53038012	5	Washer DIN 6798-A 12		
13	52101363	2	Bolt DIN 931 M12-50 8.8		
14	52120012	2	Nut DIN 934 M12 8.8		
15	13814070	1	Electric Fuel Feed Pump 12V		
16	13814072	2	NIPPLE EYE		
17	57000361	2	Washer 10-14-1,5	01/06/2013	
18	52102154	2	Bolt DIN 933 M6-10 8.8		
19	51030006	2	Washer DIN 125-6		
20	51086015	1	One Ear Clamp With Interior Ring		
21	13814012	1	Pipe	25/09/2007	
NS	58088283	2	Pastic Cable Zip Tie [NS]	27/02/2014	
NS	60900126	1	TERMINAL [NS]		

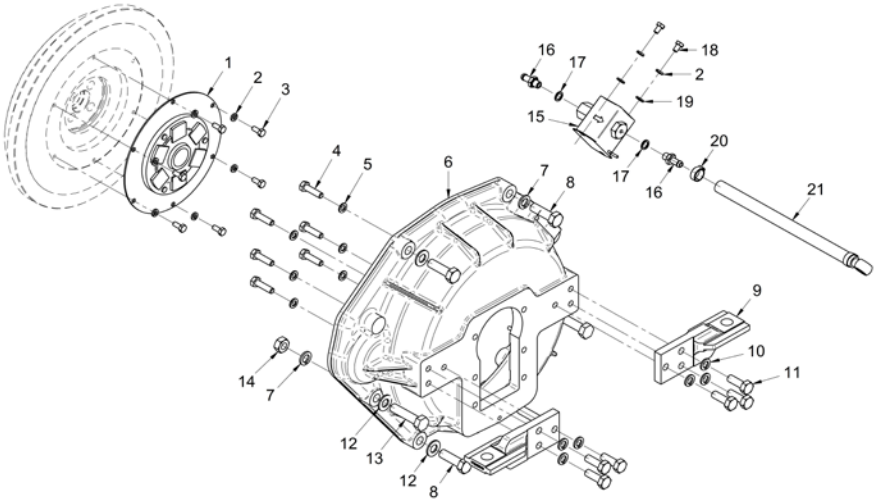

[NS] Not shown

Kit Gearbox

	17210244		Kit GearBox TMC-260		
FIG.	**REF.**	**QTY**	**DESCR.**	**FROM**	**UPTO**
1	17222027.1	1	Flywheel		
2	17210071	1	Flexible Coupling Type B SAE 6"1/2		
3	53038008	12	Washer DIN 6798-A 8		
4	52102257	8	Bolt DIN 933 M8-20 8.8		
5	13410018	1	SAE 7,adaptor flange		
6	53033012	8	Washer GROWER DIN 127-12		
7	52202361	3	Bolt DIN 933 M12-1,25-40 8.8		
8	17010003	1	Bracket		
9	52102359	4	Bolt DIN 933 M12-30 8.8		
10	22510012	1	Adaptor Flange "BW"		
11	53038010	6	Washer DIN 6798-A 10		
12	52102307	8	Bolt DIN 933 M10-20 8.8		
13	24880901	1	Bracket, GearBox Control		
15	24810913	1	Clamp,CABLE		
16	51030008	2	Washer DIN 125-8	19/11/2013	
17	53033008	2	Washer GROWER DIN 127-8	19/11/2013	
18	ALLPA.93	1	Coupling,cable	23/05/2017	
18	14719115	1	Coupling,cable		23/05/2017
19	51030006	5	Washer DIN 125-6		
20	51051107	1	Pin DIN-94 1,6-16		
21	52102258	6	Bolt DIN 933 M8-25 8.8		
22	17010004	1	Bracket		
24	53038012	5	Washer DIN 6798-A 12		
25	52102358	2	Bolt DIN 933 M12-25 8.8		
26	13814070	1	Electric Fuel Feed Pump 12V		
27	13814072	2	NIPPLE EYE		
28	57000361	2	Washer 10-14-1,5	01/06/2013	
29	52102154	2	Bolt DIN 933 M6-10 8.8		
30	51086015	1	One Ear Clamp With Interior Ring		
31	13814012	1	Pipe	25/09/2007	
32	53033006	2	Washer GROWER DIN 127-6		
NS	58088283	2	Pastic Cable Zip Tie [NS]	27/02/2014	
NS	60900126	1	TERMINAL [NS]		

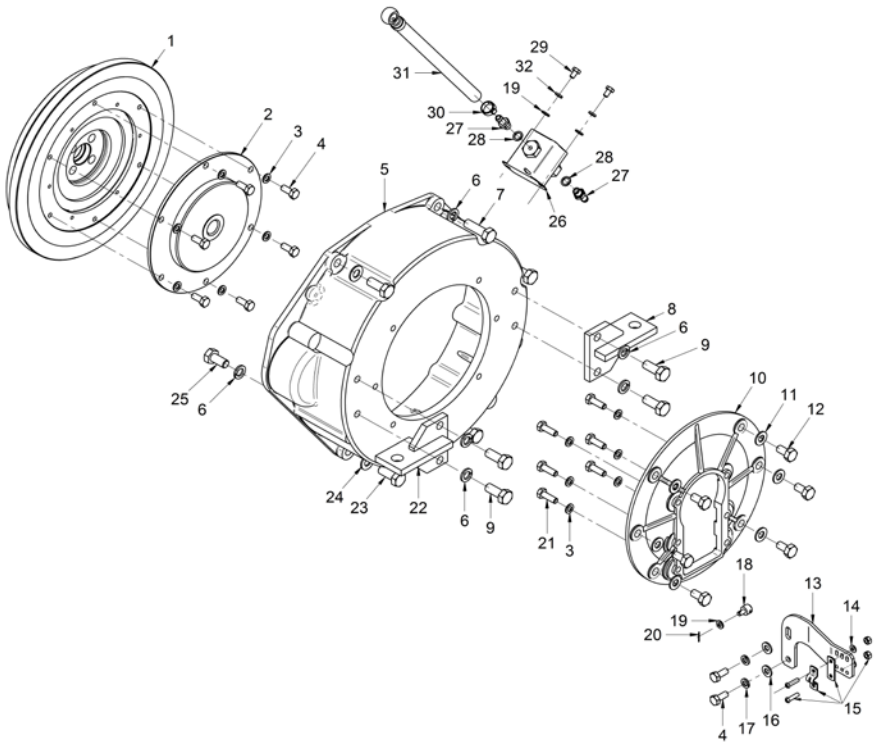

[NS] Not shown

Kit Gearbox

17232100			Kit GearBox TMC/ZF/PRM		
FIG.	REF.	QTY	DESCR.	FROM	UPTO
1	17310070	1	Flexible Coupling Type A D. 185	08/02/2013	
2	53033006	6	Washer GROWER DIN 127-6		
3	52102156	6	Bolt DIN 933 M6-16 8.8		
4	52101260	6	Bolt DIN 931 M8-35 8.8		
5	53038008	6	Washer DIN 6798-A 8		
6	17210009	1	Bell Housing,GearBox		
7	53033012	3	Washer GROWER DIN 127-12		
9	53038012	6	Washer DIN 6798-A 12		
16	52102309	6	Bolt DIN 933 M10-30 8.8		
17	53033010	6	Washer GROWER DIN 127-10		
18	17210026	2	Rear Bracket	23/09/2014	
19	52202360	3	Bolt DIN 933 M12-1,25-35 8.8		
20	52120012	2	Nut DIN 934 M12 8.8		
21	52101363	2	Bolt DIN 931 M12-50 8.8		
22	13814070	1	Electric Fuel Feed Pump 12V		
23	57000361	2	Washer 10-14-1,5	01/06/2013	
24	13814072	2	NIPPLE EYE		
25	52102154	2	Bolt DIN 933 M6-10 8.8		
26	51086015	1	One Ear Clamp With Interior Ring		
27	13814012	1	Pipe	25/09/2007	
NS	58088283	2	Pastic Cable Zip Tie [NS]	27/02/2014	
NS	58088284	1	Pastic Cable Zip Tie [NS]	05/06/2014	
NS	60900126	1	TERMINAL [NS]		

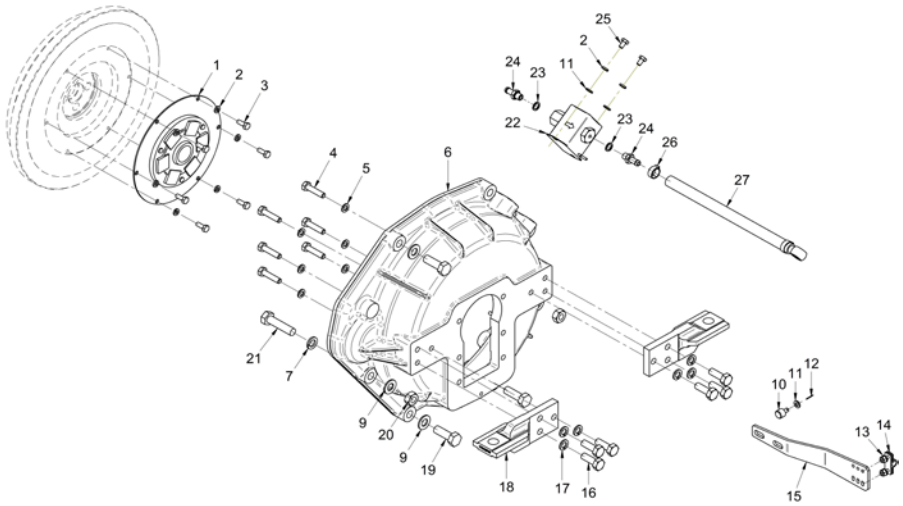

[NS] Not shown

Kit Gearbox

17232100T			Kit S-Drive TECHNO.SP60		
FIG.	**REF.**	**QTY**	**DESCR.**	**FROM**	**UPTO**
1	17210044	1	Suplement,Flywheel		
2	17310070	1	Flexible Coupling Type A D. 185	08/02/2013	
3	53033006	8	Washer GROWER DIN 127-6		
4	52101162	6	Bolt DIN 931 M6-45 8.8		
5	52102309	8	Bolt DIN 933 M10-30 8.8		
6	53038010	10	Washer DIN 6798-A 10		
7	17210013	1	Bell Housing		
8	53038012	4	Washer DIN 6798-A 12		
9	52202359	1	Bolt DIN 933 M12-1,25-30 8.8		
10	51030006	2	Washer DIN 125-6		
11	51051107	1	Pin DIN-94 1,6-16		
12	14719115	1	Coupling,cable		
13	24810913	1	Clamp,CABLE		
14	51030005	2	Washer DIN 125-5		
15	52101313	2	Bolt DIN 931 M10-50 8.8		
16	53038008	11	Washer DIN 6798-A 8		
17	52101263	8	Bolt DIN 931 M8-50 8.8		
18	40019030	3	Stud		
19	52120008	3	Nut DIN 934 M8 8.8		
20	17211036	1	Raccord		
21	13211035	1	Exhaust Manifold Outlet Bend		
22	54081020	2	Clamp DIN 3017 20-32/9 W4		
23	52202358	3	Bolt DIN 933 M12-1,25-25 8.8		
24	53033012	3	Washer GROWER DIN 127-12		
25	52102358	2	Bolt DIN 933 M12-25 8.8		
26	17210005.1	2	Front Bracket		
27	13814070	1	Electric Fuel Feed Pump 12V		
28	13814012	1	Pipe	25/09/2007	
29	51086015	1	One Ear Clamp With Interior Ring		
30	13814072	2	NIPPLE EYE		
31	57000361	2	Washer 10-14-1,5	01/06/2013	
32	52102154	2	Bolt DIN 933 M6-10 8.8		
NS	M87501927	1	Water Intake Hose (HQ) D. 19-27 [NS]		
NS	58088282	2	Pastic Cable Zip Tie [NS]	17/01/2014	
NS	60121005	1	Water Trainer 1/2" [NS]		

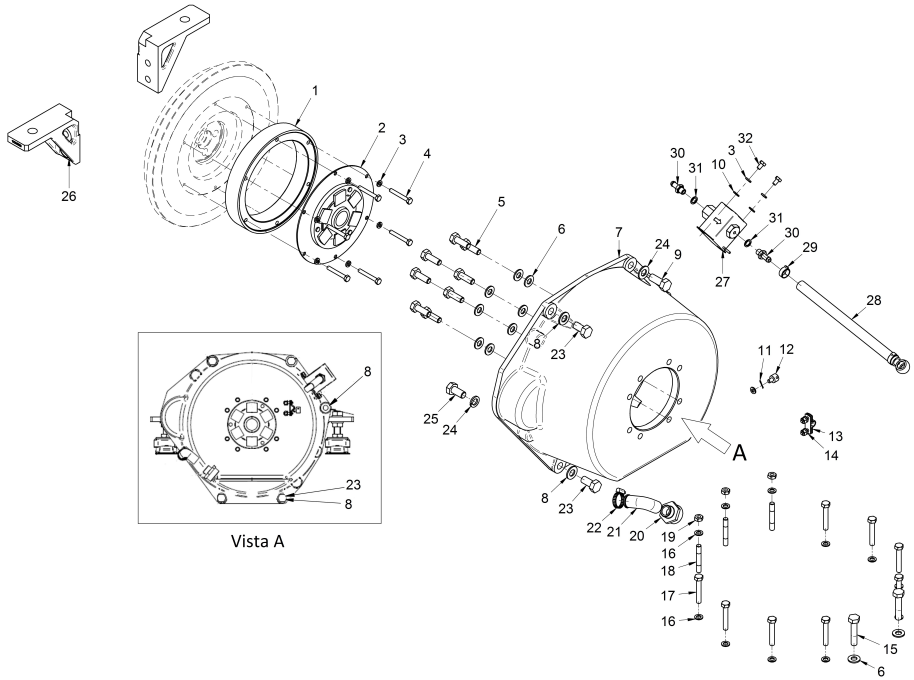

[NS] Not shown

Kit Gearbox

17232100T			Kit S-Drive TECHNO.SP60		
FIG.	**REF.**	**QTY**	**DESCR.**	**FROM**	**UPTO**
NS	60900126	1	TERMINAL [NS]		

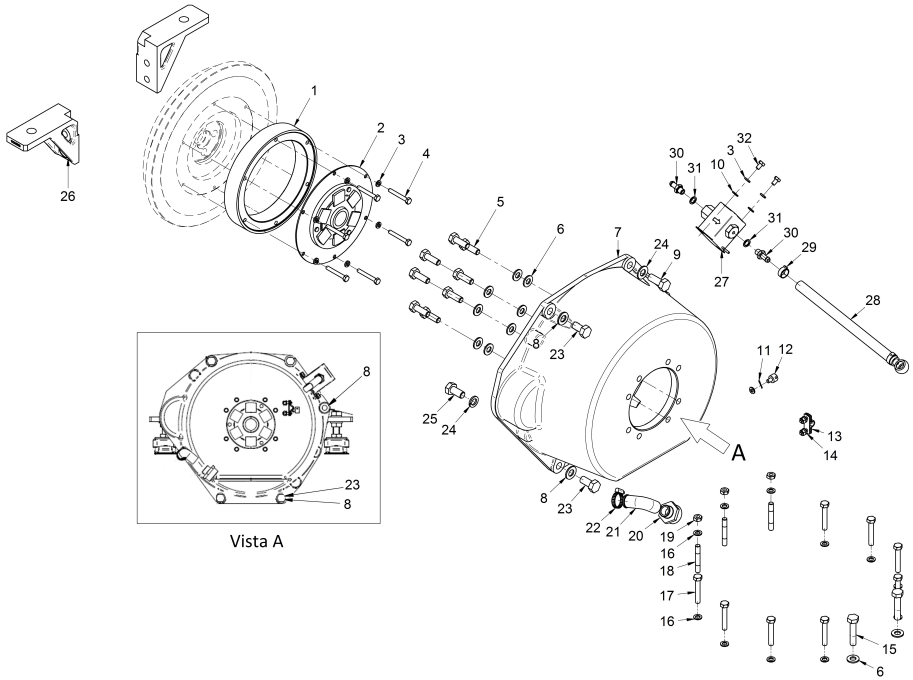

Kit Gearbox

	17310125		Kit S-Drive BUKH DV36		
FIG.	**REF.**	**QTY**	**DESCR.**	**FROM**	**UPTO**
1	17310025	1	Shaft		
2	53033006	10	Washer GROWER DIN 127-6		
3	52102157	6	Bolt DIN 933 M6-20 8.8		
4	17310027	1	KEY		
5	13910027	1	Washer		
6	53033010	1	Washer GROWER DIN 127-10		
7	52102309	1	Bolt DIN 933 M10-30 8.8		
8	13410018	1	SAE 7,adaptor flange		
9	15217010	1	Bracket,wirings		
10	53033012	6	Washer GROWER DIN 127-12		
11	52202361	3	Bolt DIN 933 M12-1,25-40 8.8		
12	17010003	1	Bracket		
13	52102359	4	Bolt DIN 933 M12-30 8.8		
14	17310026	1	BUKH S-Drive DV-36, DV-38 Adaptor Flange		
15	53038010	13	Washer DIN 6798-A 10		
16	52102308	6	Bolt DIN 933 M10-25 8.8		
17	53033008	8	Washer GROWER DIN 127-8		
18	52103257	8	Bolt DIN 912 M8-20 8.8		
19	17010004	1	Bracket		
20	52102358	2	Bolt DIN 933 M12-25 8.8		
21	52202359	3	Bolt DIN 933 M12-1,25-30 8.8		
22	53038012	5	Washer DIN 6798-A 12		
23	13814070	1	Electric Fuel Feed Pump 12V		
24	13814012	1	Pipe	25/09/2007	
25	51086015	1	One Ear Clamp With Interior Ring		
26	13814072	2	NIPPLE EYE		
27	57000361	2	Washer 10-14-1,5	01/06/2013	
28	52102154	2	Bolt DIN 933 M6-10 8.8		
29	51030006	2	Washer DIN 125-6		
30	53038008	1	Washer DIN 6798-A 8		
31	52120008	1	Nut DIN 934 M8 8.8		
NS	58088283	2	Pastic Cable Zip Tie [NS]	27/02/2014	
NS	60900126	1	TERMINAL [NS]		

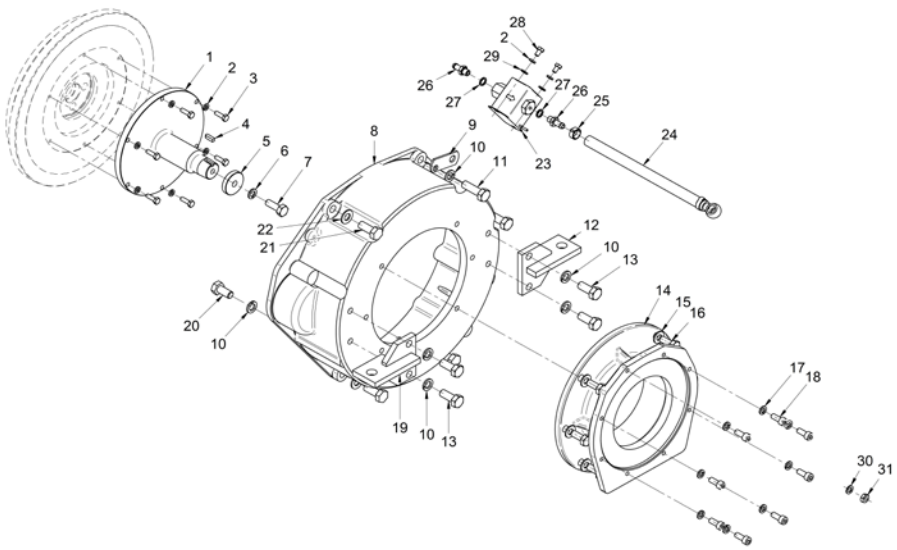

[NS] Not shown

Kit Gearbox

17310217			Kit GearBox PRM-150 Without Oil Cooler		
FIG.	REF.	QTY	DESCR.	FROM	UPTO
1	17210077	1	Flexible Coupling T. E D.185 PRM150	07/09/2015	
1	17310070	1	Flexible Coupling Type A D. 185		07/09/2015
2	53033006	6	Washer GROWER DIN 127-6		
3	52102155	6	Bolt DIN 933 M6-12 8.8		07/09/2015
3	52102156	6	Bolt DIN 933 M6-16 8.8	07/09/2015	
4	52101259	6	Bolt DIN 931 M8-30 8.8		
5	53038008	6	Washer DIN 6798-A 8		
6	17210009	1	Bell Housing,GearBox		
7	53033012	2	Washer GROWER DIN 127-12		
8	52202361	3	Bolt DIN 933 M12-1,25-40 8.8		
9	17210011	2	Rear Bracket MINI-33/44 TMC60		07/09/2015
9	17210030	2	Rear Bracket, PRM-150	07/09/2015	
10	53033010	6	Washer GROWER DIN 127-10		
11	52102309	6	Bolt DIN 933 M10-30 8.8		
12	53038012	5	Washer DIN 6798-A 12		
13	52120012	2	Nut DIN 934 M12 8.8		
14	52101363	2	Bolt DIN 931 M12-50 8.8		
15	13814070	1	Electric Fuel Feed Pump 12V		
16	13814012	1	Pipe	25/09/2007	
17	51086015	1	One Ear Clamp With Interior Ring		
18	13814072	2	NIPPLE EYE		
19	57000361	2	Washer 10-14-1,5	01/06/2013	
20	52102154	2	Bolt DIN 933 M6-10 8.8		
21	51030006	3	Washer DIN 125-6		
NS	58088283	2	Pastic Cable Zip Tie [NS]	27/02/2014	
NS	60900126	1	TERMINAL [NS]		

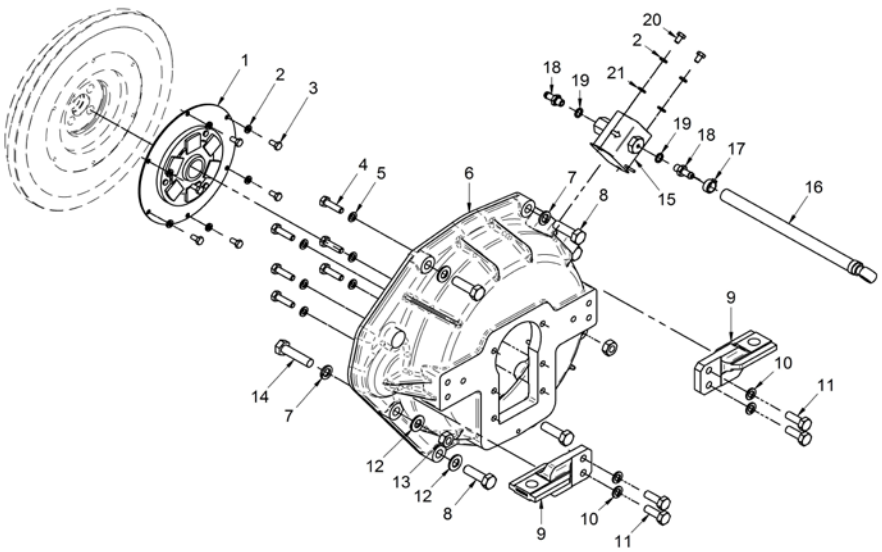

[NS] Not shown

	17214060B		Kit Isolated SOLAS		
FIG.	REF.	QTY	DESCR.	FROM	UPTO
1	19017104	1	Relay 12 V. Bipolar		
2	60572701	1	Support, Relay		
3	52102154	2	Bolt DIN 933 M6-10 8.8		
4	51030006	4	Washer DIN 125-6		
5	52202359	2	Bolt DIN 933 M12-1,25-30 8.8		
7	13019001	2	Clamp		
8	60900972	1	High Coolant, 2 Poles		
9	60900999	2	Connection M14X1,5 5/8" EXA.22 L=22		
10	56000073	2	Copper Washer 16-23-1,5		
11	60900982	1	Temperature SENDER		
12	52120008	1	Nut DIN 934 M8 8.8		
13	17417014	2	Washer		
14	52120006	1	Nut DIN 934 M6 8.8		
15	17417010	2	Bushing		
16	51030012	2	Washer DIN 125-12		
17	53033006	1	Washer GROWER DIN 127-6		
18	17217011	2	Bushing		
19	15119015	1	CABLE Holder Ball		
20	17117016B.2	1	Alt. 14V/95A		
21	56000069	1	Washer 14-20-1,5		
22	14419023	1	Ball JOINT		
23	51030008	1	Washer DIN 125-8		
24	17227007.4B	1	Plate		
25	17217018	1	Spacer 10,5x25x25		
26	53033008	1	Washer GROWER DIN 127-8		
27	TR.10.8	1	Ring Terminal 10 Sec.		
28	TFM.6.3.T.5.I	1	Straight Receptacle 6.3 Faston		
29	17217012	2	Bushing		
30	52101325	1	Bolt DIN 931 M10-120 8.8		
31	51031008	2	Washer DIN 9021 8		
32	60900978	1	Switch, Oil Press		
33	51030010	1	Washer DIN 125-10		
34	17417025	1	Spacer 13.5x10.2x11	09/09/2015	
35	52101267	1	Bolt DIN 931 M8-70 8.8		
NS	60900151	1	Wire [NS]		

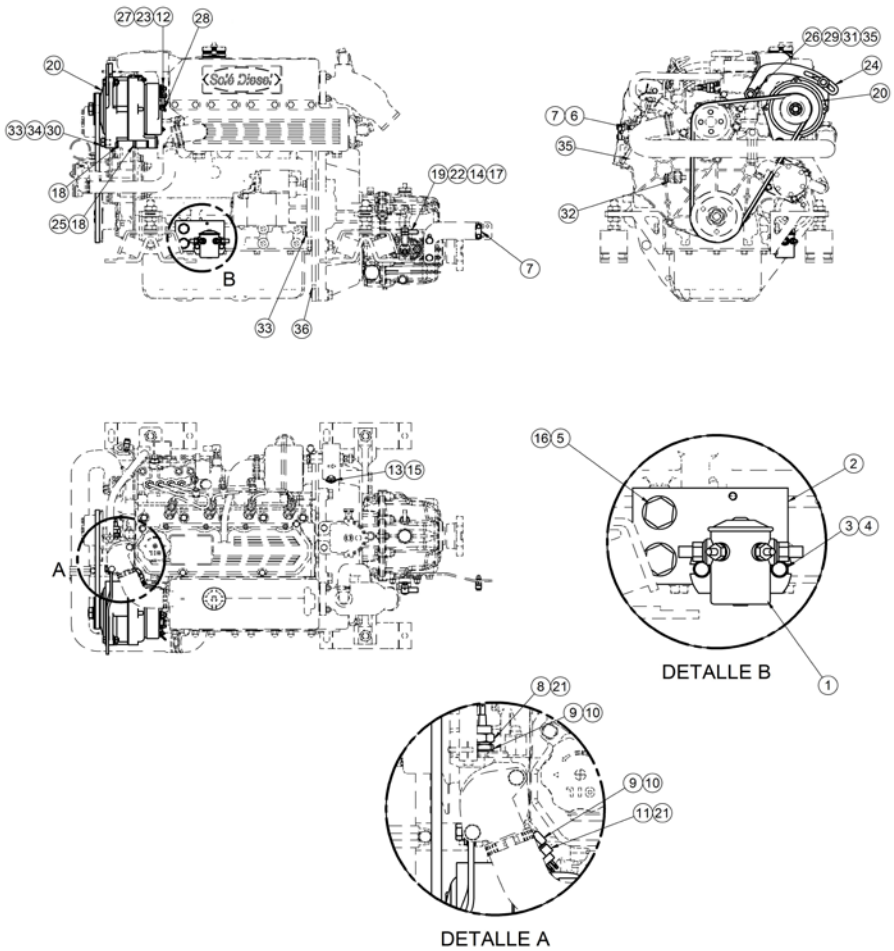

[NS] Not shown

17214060B			Kit Isolated SOLAS		
FIG.	REF.	QTY	DESCR.	FROM	UPTO
NS	60900154	1	Wire [NS]		
NS	60900155	1	Wire [NS]		
NS	60972048	1	MASS BLACK TO Wiring START [NS]		
NS	60972202R.2V	1	MINI33/44/55 E.Wiring E.Isolated SOLAS [NS]		13/04/2016
NS	60972203	1	Wir. Elect. SOLAS Isol. MINI33/44/55 SVT [NS]	13/04/2016	

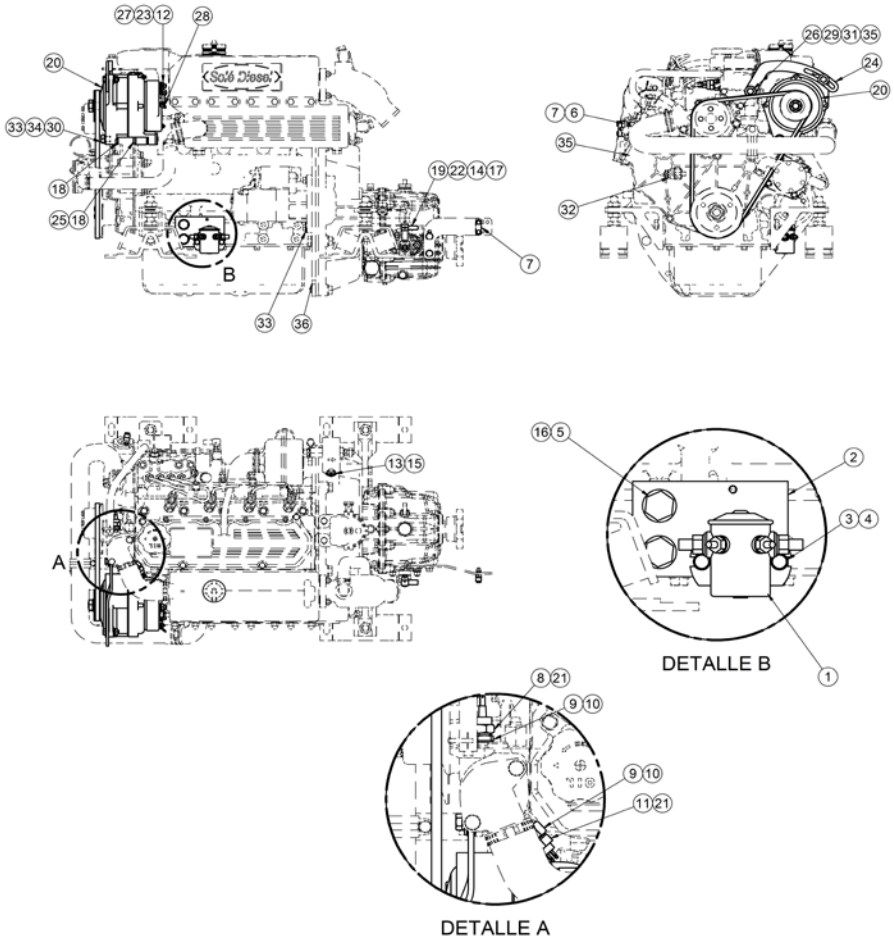

	17217102		Kit 2nd Alternator 28V/55A		
FIG.	REF.	QTY	DESCR.	FROM	UPTO
1	13110202	1	Pulley 2A (S)		
2	17210004	2	Bracket,Front		
2	17210004.1	2	Bracket, Front	18/11/2014	
3	17217102.3	1	Bracket, Alternator		
4	17217102.5	1	Plate		
5	17217102.6	1	Belt Type AX 21		
6	17417020	1	Pulley Alternator		
7	17417027	1	Alt. 28V/55A Mahle	16/03/2016	
8	18017021	1	PAN,alternator L.H.		
9	51030008	2	Washer DIN 125-8		
10	51030010	1	Washer DIN 125-10		
11	51030012	5	Washer DIN 125-12		
12	52101376	1	Bolt DIN 931 M12-130 8.8		
13	52102257	2	Bolt DIN 933 M8-20 8.8		
14	52102309	1	Bolt DIN 933 M10-30 8.8		
15	52120010	1	Nut DIN 934 M10 8.8		
16	52120012	1	Nut DIN 934 M12 8.8		
17	52202361	4	Bolt DIN 933 M12-1,25-40 8.8		
18	53033008	2	Washer GROWER DIN 127-8		
19	53033010	1	Washer GROWER DIN 127-10		
20	53033012	1	Washer GROWER DIN 127-12		

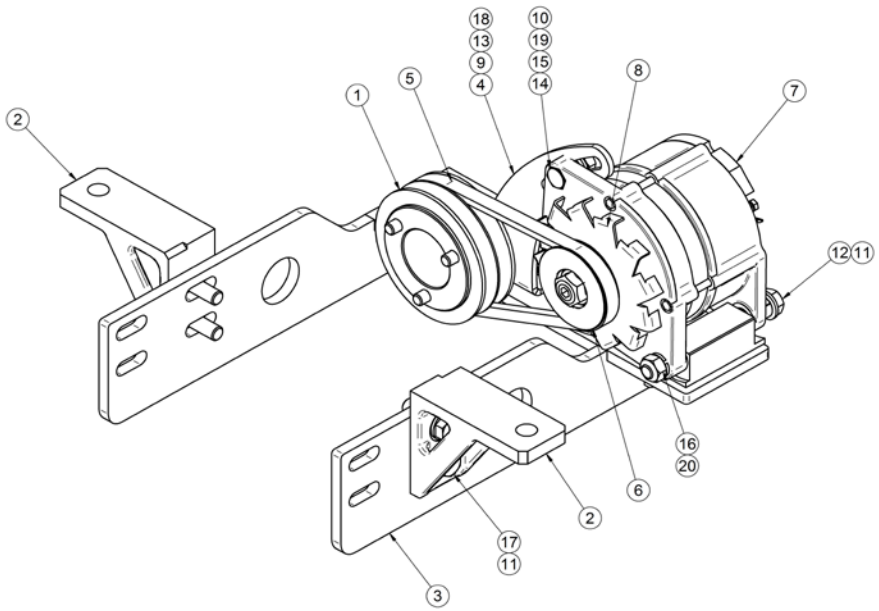

	17217103		Kit 2nd Alternator 14V/90A		
FIG.	REF.	QTY	DESCR.	FROM	UPTO
1	13110202	1	Pulley 2A (S)		
2	17210004.1	2	Bracket, Front	18/11/2014	
3	17217019	1	Alternator 14V/90A		
4	17217102.6	1	Belt Type AX 21		
5	17217103.1	1	Plate		
6	17217103.3	1	Bracket, Alternator		
7	17417020	1	Pulley Alternator		
8	51030008	3	Washer DIN 125-8		
9	51030010	2	Washer DIN 125-10		
10	51030012	8	Washer DIN 125-12		
11	51031008	1	Washer DIN 9021 8		
12	52101326	1	Bolt DIN 931 M10-130 8.8		
13	52102256	2	Bolt DIN 933 M8-15 8.8		
14	52102259	1	Bolt DIN 933 M8-30 8.8		
15	52120008	1	Nut DIN 934 M8 8.8		
16	52120010	1	Nut DIN 934 M10 8.8		
17	52202358	4	Bolt DIN 933 M12-1,25-25 8.8		
18	52202361	4	Bolt DIN 933 M12-1,25-40 8.8		
19	53033008	3	Washer GROWER DIN 127-8		
20	53033010	1	Washer GROWER DIN 127-10		
NS	13817016	1	Spacer 17X28X4 [NS]		
NS	53033012	4	Washer GROWER DIN 127-12 [NS]		
NS	53033016C	1	Washer [NS]		

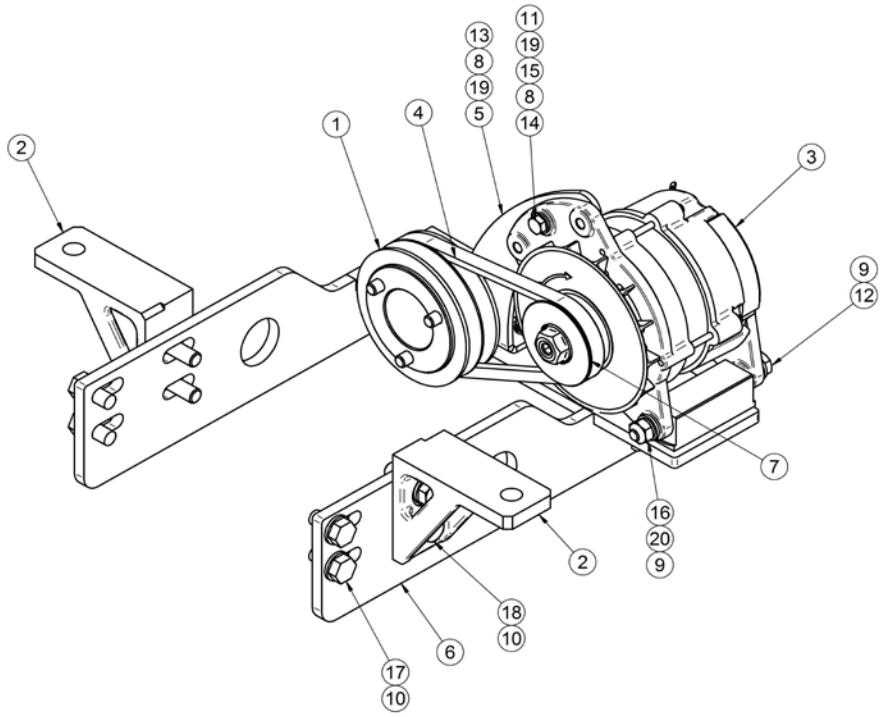

[NS] Not shown

17217200			Kit Wire Earth Isolated Alternator 14V/9		
FIG.	REF.	QTY	DESCR.	FROM	UPTO
1	19017104	1	Relay 12 V. Bipolar		19/06/2017
1	19017113	1	Relay 12 V, Earth Isolated	20/06/2017	
2	17317003	1	Support, Relay	20/06/2017	
2	60572701	1	Support, Relay		19/06/2017
3	52102154	2	Bolt DIN 933 M6-10 8.8		
4	51030006	2	Washer DIN 125-6		
5	52202359	2	Bolt DIN 933 M12-1,25-30 8.8		
6	60900987	1	Sender, Oil Press.		
7	13019001	2	Clamp		
8	60900972	1	High Coolant, 2 Poles		
9	60900999	2	Connection M14X1,5 5/8" EXA.22 L=22		
10	56000073	2	Copper Washer 16-23-1,5		
11	60900982	1	Temperature SENDER		
13	17417014	2	Washer		
15	17417010	2	Bushing		
16	51030012	2	Washer DIN 125-12		
18	17217011	2	Bushing		
19	15119015	1	CABLE Holder Ball		
20	17117016B.2	1	Alt. 14V/95A		
21	56000069	1	Washer 14-20-1,5		
22	14419023	1	Ball JOINT		
24	17227007.4B	1	Plate		
28	TFM.6.3.T.5.I	2	Straight Receptacle 6.3 Faston		
29	17217012	2	Bushing		
31	51031008	1	Washer DIN 9021 8		
32	60900978	1	Switch, Oil Press		
35	17217018	1	Spacer 10,5x25x25		
36	17117052	1	Oil Pressure Sensor Adaptor	29/09/2015	
NS	51030010	1	Washer DIN 125-10 [NS]		
NS	53033006	1	Washer GROWER DIN 127-6 [NS]		
NS	60900126	1	TERMINAL [NS]		
NS	60900152	1	Wire [NS]		
NS	60900155	1	Wire [NS]		
NS	60972048	1	MASS BLACK TO Wiring START [NS]		
NS	60972201	1	Wir. Elect. Isolated MINI-33/44/55 SVT [NS]	13/04/2016	

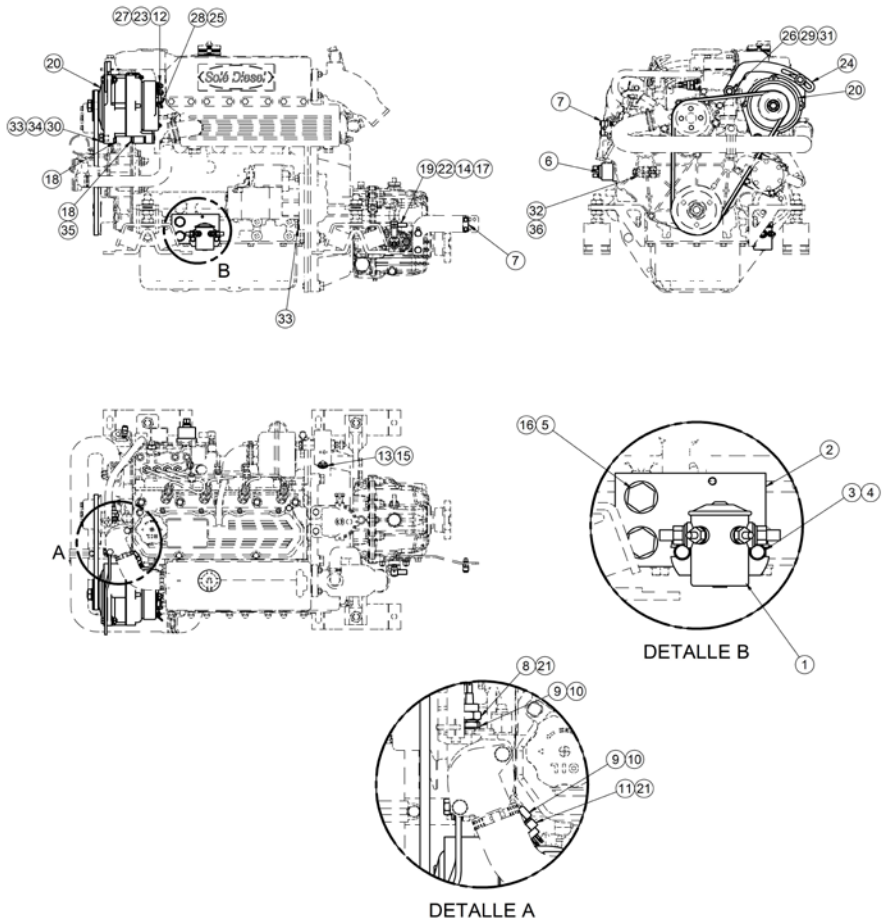

[NS] Not shown

17217200			Kit Wire Earth Isolated Alternator 14V/9		
FIG.	REF.	QTY	DESCR.	FROM	UPTO
NS	60972202R.2	1	MINI-33/44/55 E. Wiring EARTH ISOLATED [NS]		13/04/2016

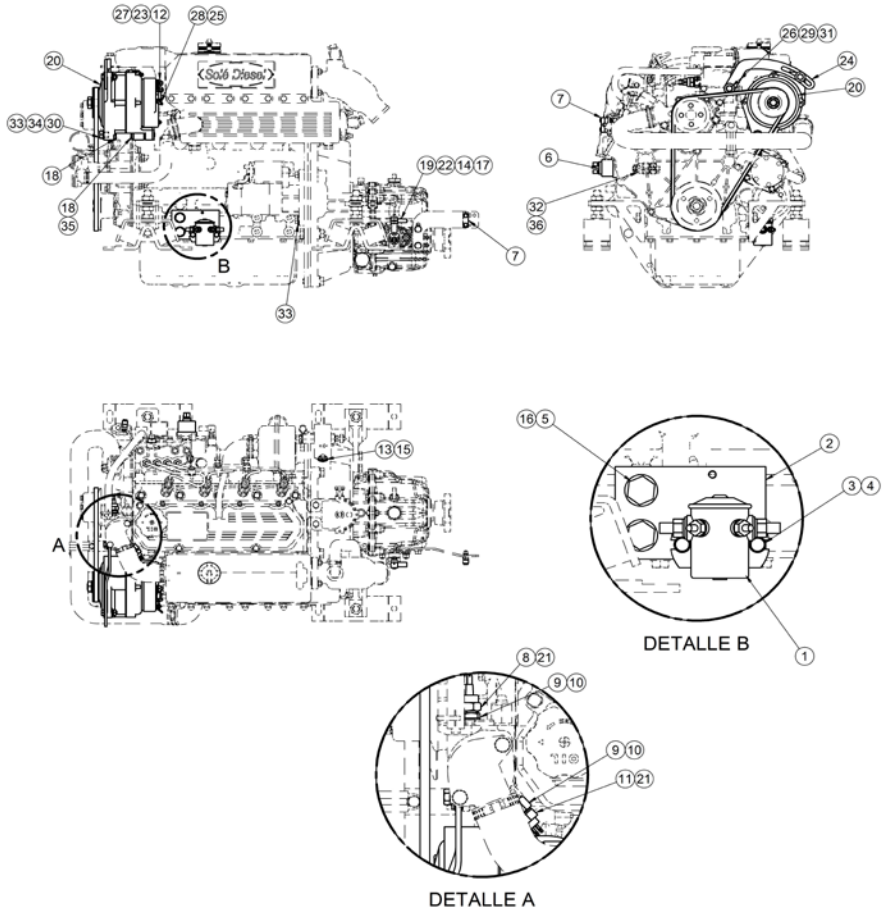

24813510			Kit Water Leak Sensor & Alarm SP60 12V		
FIG.	REF.	QTY	DESCR.	FROM	UPTO
1	60938203	1	SPROP60 Water SYStem Alarm SYSTEM		
2	24813504	1	Water Alarm Sensor		

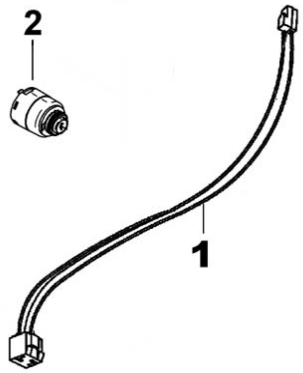

	13410019C		SAE 5,Adaptor Flange		
FIG.	REF.	QTY	DESCR.	FROM	UPTO
1	13410019	1	SAE 5,adaptor flange		
2	53038012	3	Washer DIN 6798-A 12		
3	53033012	2	Washer GROWER DIN 127-12		
4	52102358	2	Bolt DIN 933 M12-25 8.8		
5	52202359	3	Bolt DIN 933 M12-1,25-30 8.8		

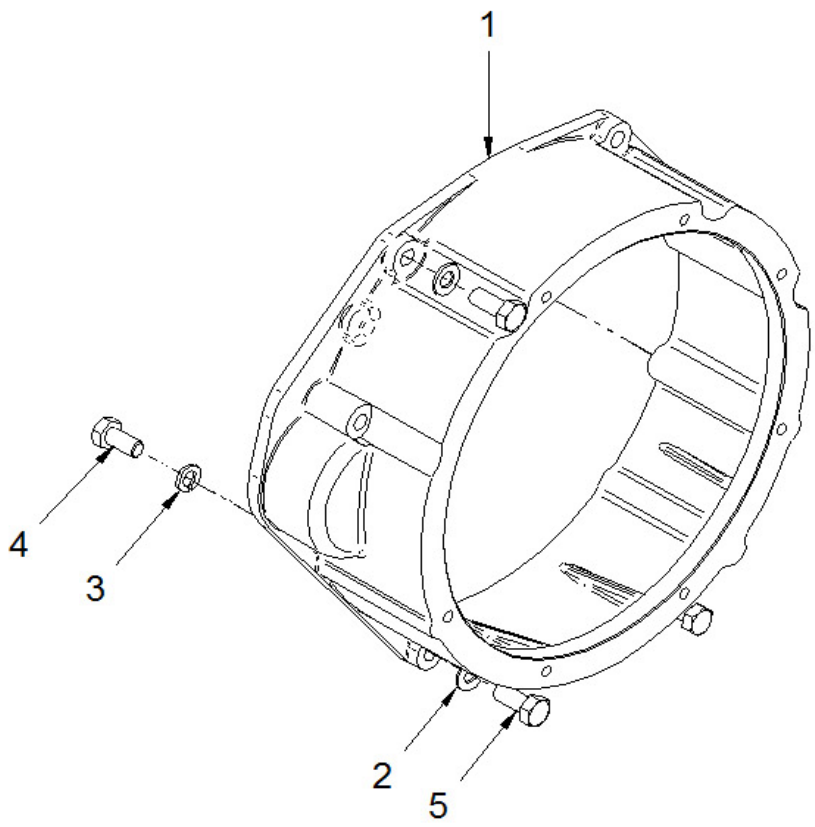

Other Kits

	13812010		Pression Gauge Kit		
FIG.	**REF.**	**QTY**	**DESCR.**	**FROM**	**UPTO**
1	13812013.1	1	Pressure Tap		
2	13812011	1	Flexible Hose F-M G1/4-M16x2		
3	13812012	1	Presion Gauge 0-10 bar		
4	13812014	1	Protective Rubber		

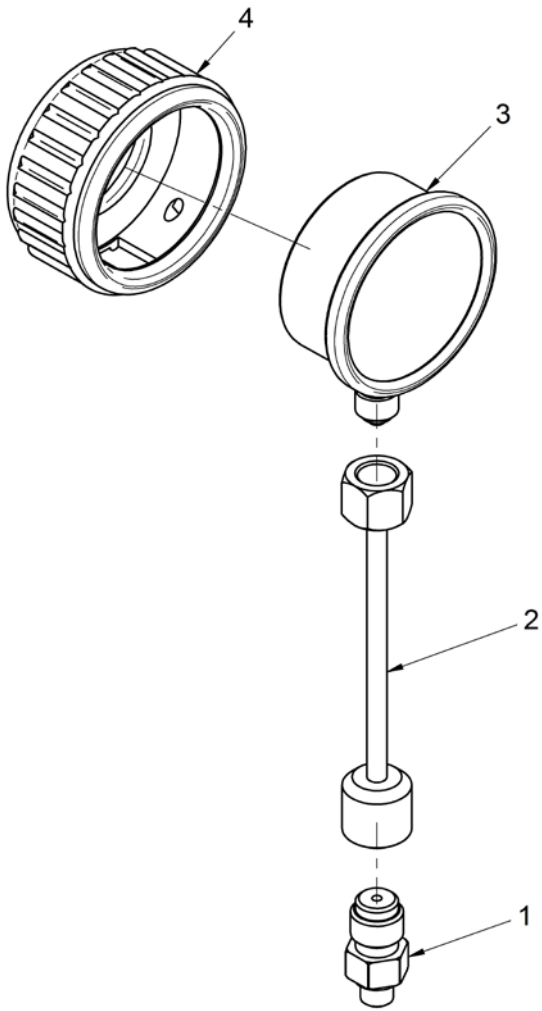

17012345			Kit Trolling Valve for TM-345/A		
FIG.	REF.	QTY	DESCR.	FROM	UPTO
1	24850050	1	Trolling Valve TM-345A		
2	17012024	1	Pipe		
3	17512017	1	Pipe, rev.oil Cooler		
4	14712015	2	Bolt,Coupling pipe oil		
5	57000375	4	Washer 17-22-1,5		
6	24810913	1	Clamp,CABLE		
7	14719115	2	Coupling,cable		
8	51051107	2	Pin DIN-94 1,6-16		
9	51030006	1	Washer DIN 125-6		
10	51030005	2	Washer DIN 125-5		

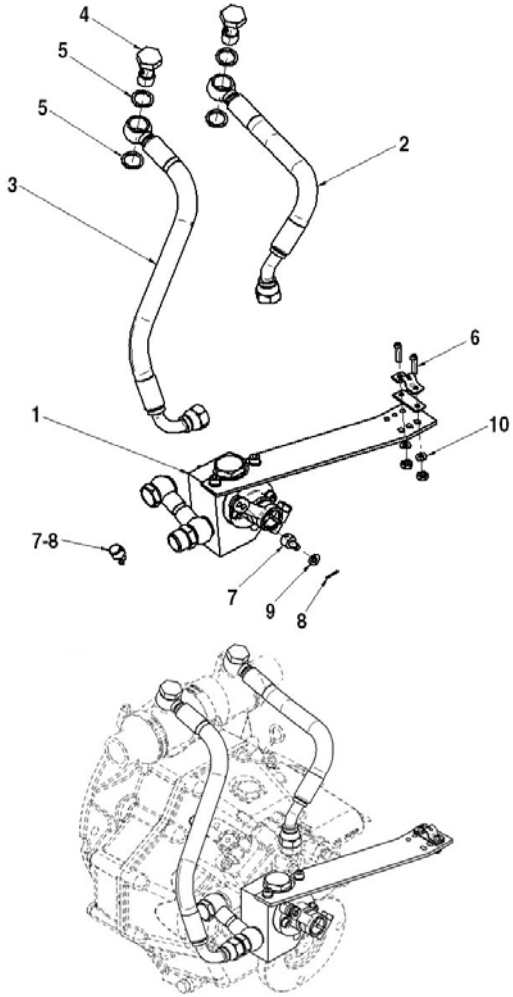

Other Kits

	17210031		Motor Bracket Width 195		
FIG.	**REF.**	**QTY**	**DESCR.**	**FROM**	**UPTO**
1	17210001.7	2	Bracket, Front (Width 195)		
2	17210010.2	2	Bracket, Rear (Width 195)		

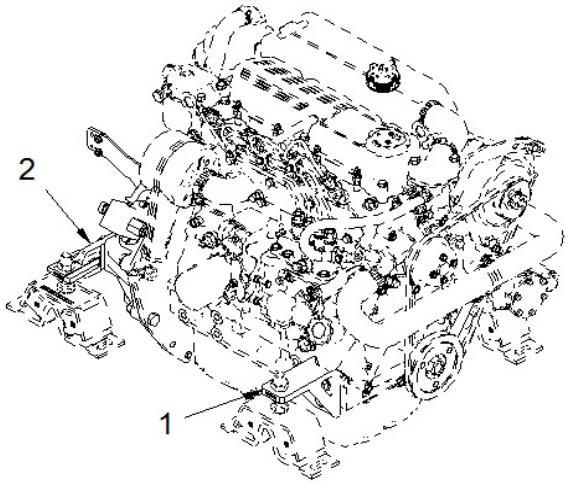

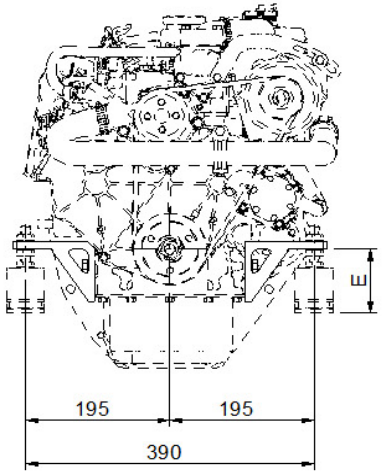

	17210032		Motor Bracket Width 205		
FIG.	**REF.**	**QTY**	**DESCR.**	**FROM**	**UPTO**
1	17210028.3	2	Bracket, Front (Width 205)	19/05/2016	
2	17210026.1	2	Bracket, Rear (Width 205)	19/05/2016	

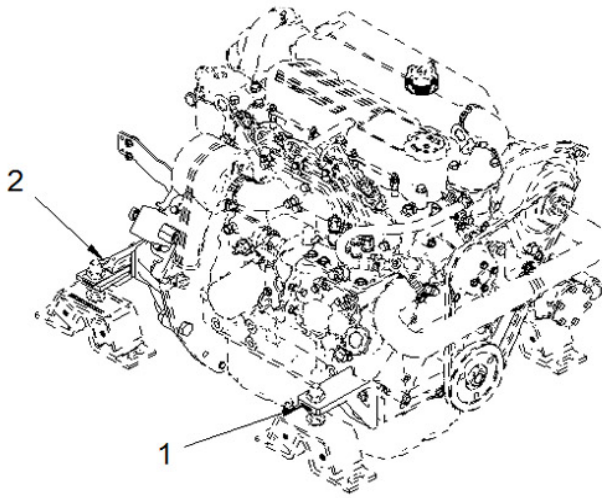

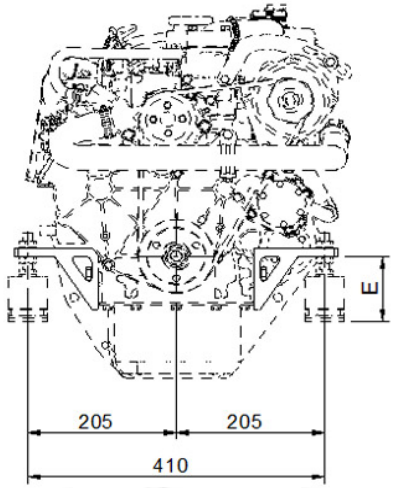

Other Kits

	17210033		Motor Bracket Width 220		
FIG.	**REF.**	**QTY**	**DESCR.**	**FROM**	**UPTO**
1	17210001.9	2	Bracket, Front (Width 220)		
2	17210010.4	2	Bracket, Rear (Width 220)		

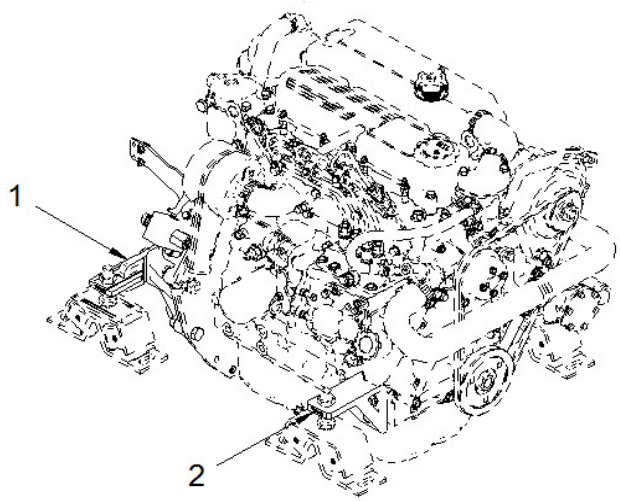

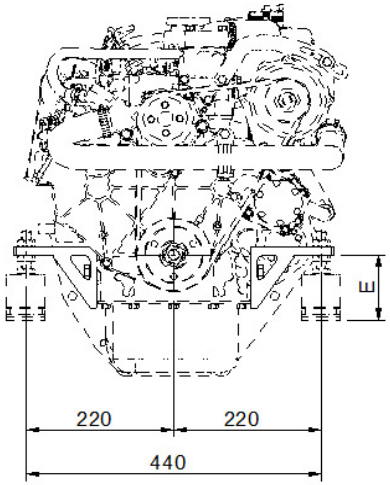

17210127.4			Kit Bobtail SAE-7		
FIG.	REF.	QTY	DESCR.	FROM	UPTO
1	13410018	1	SAE 7,adaptor flange		
2	17210028	2	Bracket, Front	08/10/2014	
3	17210003	1	Bracket, Engine Auxiliar		02/07/2017
4	13814070	1	Electric Fuel Feed Pump 12V		
5	13814012	1	Pipe		
6	53033006	2	Washer GROWER DIN 127-6		
7	52102154	2	Bolt DIN 933 M6-10 8.8		
8	51086015	1	One Ear Clamp With Interior Ring		
9	57000361	2	Washer 10-14-1,5		
10	13814072	2	NIPPLE EYE		
12	52202359	7	Bolt DIN 933 M12-1,25-30 8.8		
14	53033012	6	Washer GROWER DIN 127-12		
NS	52202361	3	Bolt DIN 933 M12-1,25-40 8.8 [NS]		
NS	53038012	6	Washer DIN 6798-A 12 [NS]		
NS	60900126	1	TERMINAL [NS]		

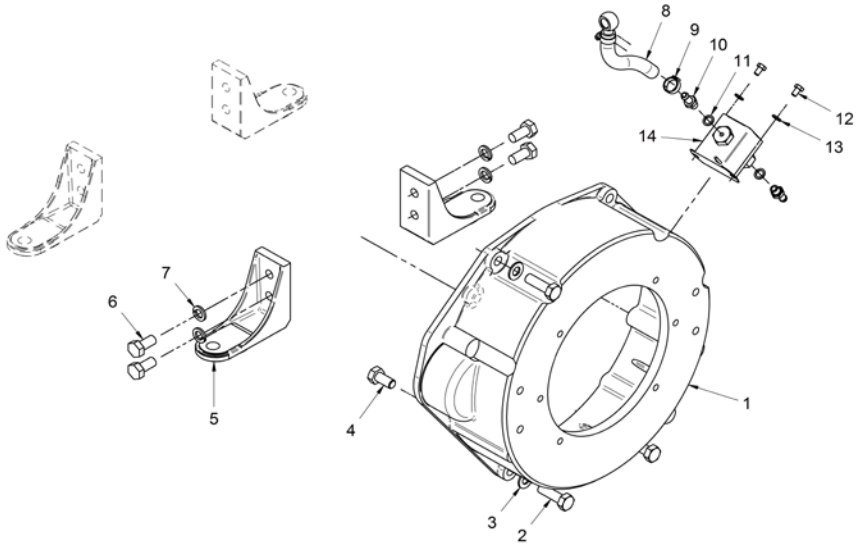

[NS] Not shown

Other Kits

	17211150		Boiler Kit (S)		
FIG.	**REF.**	**QTY**	**DESCR.**	**FROM**	**UPTO**
1	17124053	2	Joint		

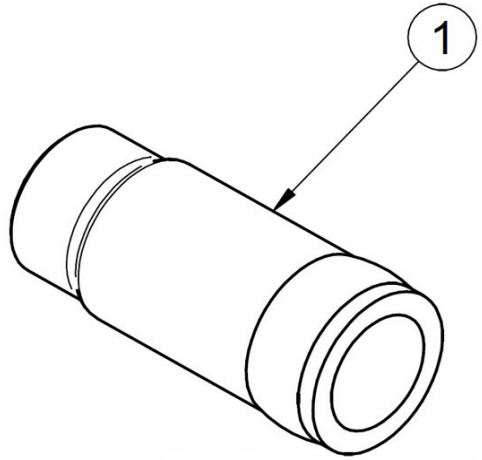

Other Kits

	17610212		Kit Cooler Assy TMC-60		
FIG.	**REF.**	**QTY**	**DESCR.**	**FROM**	**UPTO**
1	24880107	1	Kit Oil Cooler TMC-60 D.25		
2	54081016	2	Clamp DIN 3017 16-27/9 W4		
3	52102156	1	Bolt DIN 933 M6-16 8.8		
4	51030006	1	Washer DIN 125-6		
5	59071304	1	Clamp RSGU 1 30/15 W1		
6	13817011	1	Bracket		
7	51031006	1	Washer DIN 9021 6		
8	52120006	1	Nut DIN 934 M6 8.8		
9	17111012	2	Coupling		
10	60371055	2	Hose Connection 1" x 20		
NS	M87501927	1	Water Intake Hose (HQ) D. 19-27 [NS]		
NS	58088280	1	Pastic Cable Zip Tie [NS]		

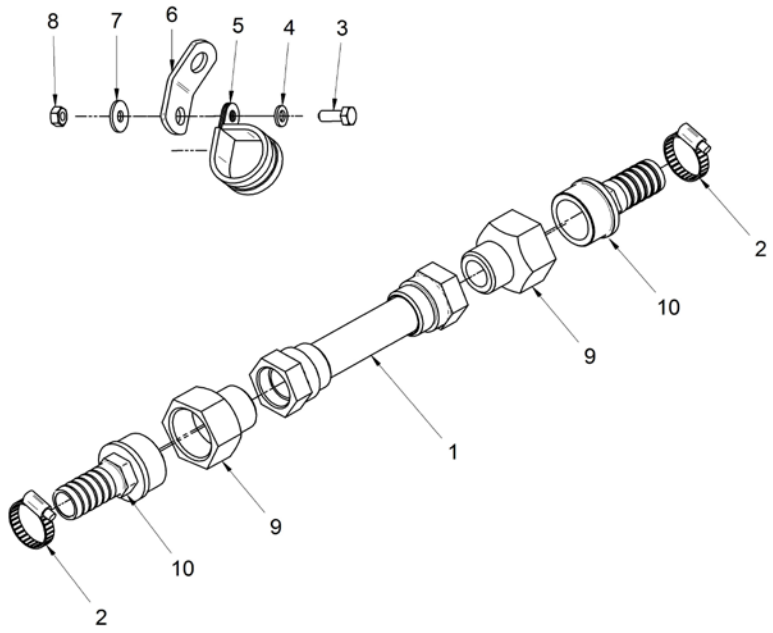

[NS] Not shown

Other Kits

	17710212		Kit Cooler Assy TMC-60		
FIG.	**REF.**	**QTY**	**DESCR.**	**FROM**	**UPTO**
1	24880107	1	Kit Oil Cooler TMC-60 D.25		
2	54081020	2	Clamp DIN 3017 20-32/9 W4		
3	52102157	1	Bolt DIN 933 M6-20 8.8		
4	51030006	1	Washer DIN 125-6		
5	59071383	1	Clamp TYP.1 38/15 W1		
6	13817011	1	Bracket		
7	51031006	1	Washer DIN 9021 6		
8	52120006	1	Nut DIN 934 M6 8.8		
NS	M87502535	1	Water Intake Hose (HQ) D. 25-33 [NS]		
NS	58088281	2	Pastic Cable Zip Tie [NS]		

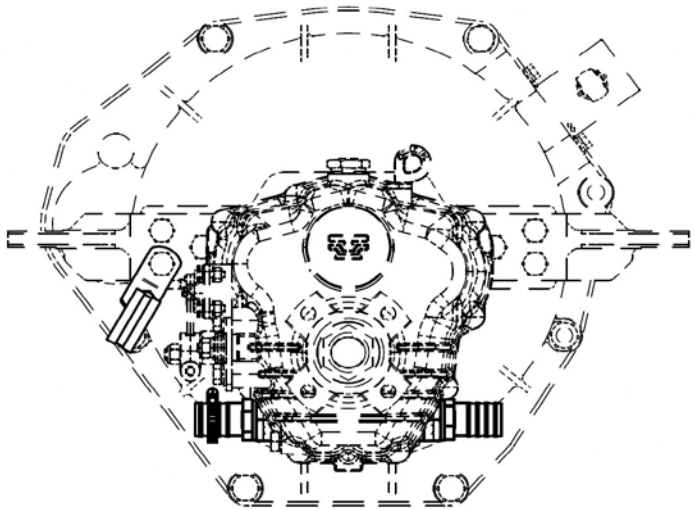

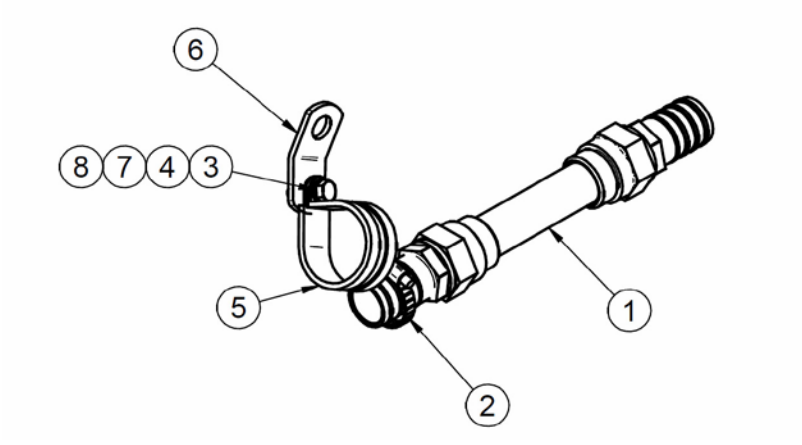

[NS] Not shown

Exhaust System

17213115			Kit Dry Exhaust With Flexible Pipe (S)		
FIG.	REF.	QTY	DESCR.	FROM	UPTO
	17213115C	1	Kit Dry Exhaust With Flexible Pipe		

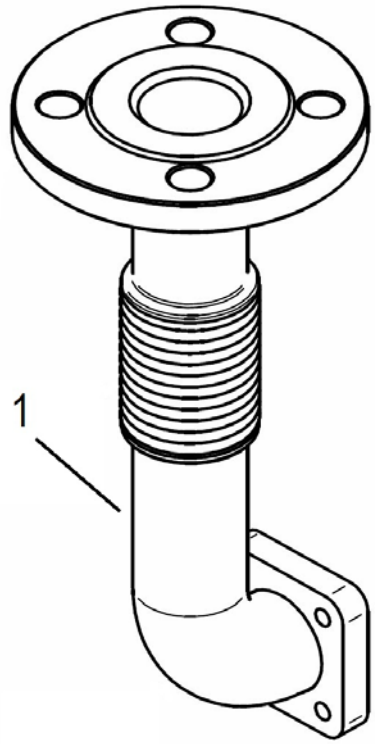

Exhaust System

17213118			Kit Dry Exh. Flexible Pipe & Silencer(S)		
FIG.	REF.	QTY	DESCR.	FROM	UPTO
1	17213115	1	Kit Dry Exhaust With Flexible Pipe (S)		
2	17113022	1	Gasket 88-50X2		
3	17213018	1	Exhaust Muffler		
4	52101463	4	Bolt DIN 931 M16-50 8.8		
5	51030016	4	Washer DIN 125-16		
6	53033016C	4	Washer	10/12/2009	
7	52120016	4	Nut DIN 934 M16 8.8		
8	17213019	1	RAINCover		

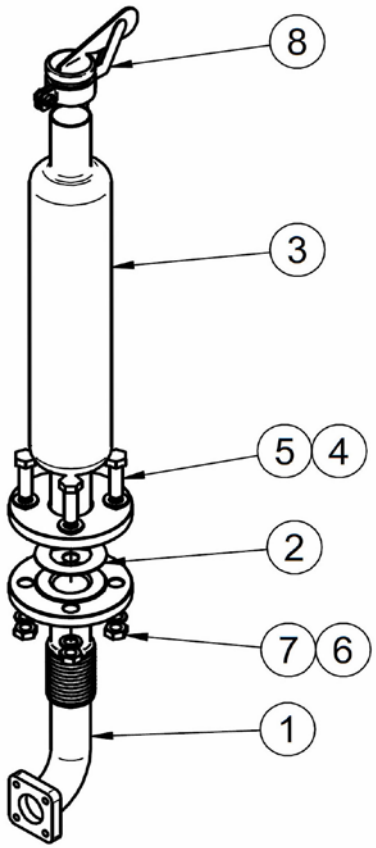

Power Take-off Pulley

	13110101		Pulley 2B (S)		
FIG.	**REF.**	**QTY**	**DESCR.**	**FROM**	**UPTO**
1	13110101.1	1	Pulley 2B		
2	53033010	3	Washer GROWER DIN 127-10		
3	52201315	3	Bolt DIN 931 M10-1,25-60 8.8		

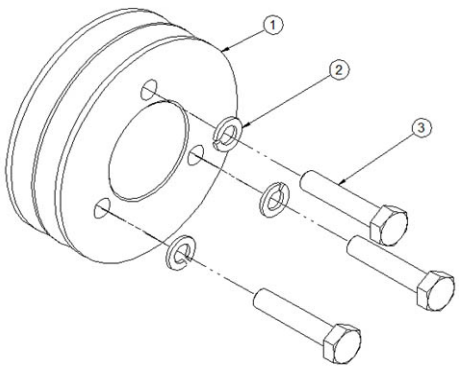

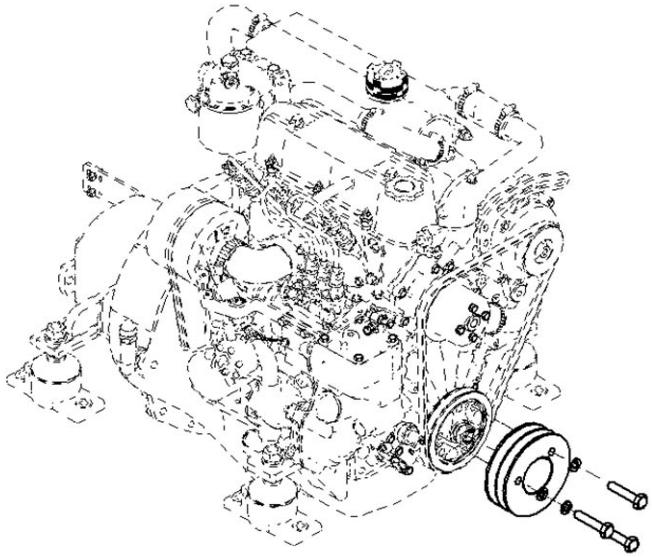

Power Take-off Pulley

	13110202		Pulley 2A (S)		
FIG.	**REF.**	**QTY**	**DESCR.**	**FROM**	**UPTO**
1	13110202.1	1	Pulley 2A	15/06/2016	
2	53033010	3	Washer GROWER DIN 127-10	15/06/2016	
3	52201313	3	Bolt DIN 931 M10-1,25-50 8.8	15/06/2016	

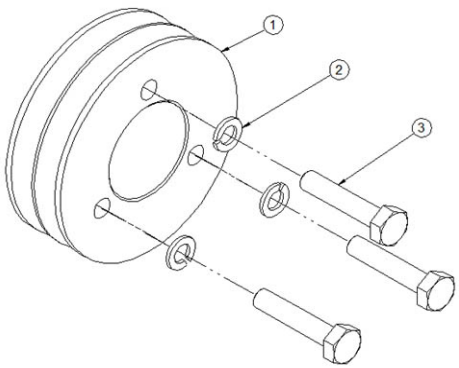

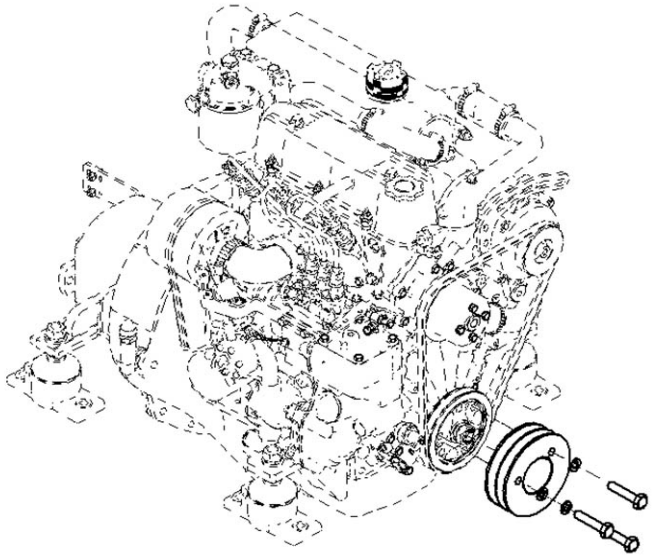

Power Take-off Pulley

	17210126		Kit Power Take-off Shaft D40 & Pulley 3A		
FIG.	**REF.**	**QTY**	**DESCR.**	**FROM**	**UPTO**
1	17210203	1	Pulley 3A		
2	17210049	1	PTO Shaft, D40		
3	53033010	4	Washer GROWER DIN 127-10		
4	52203315	3	Bolt DIN 912 M10-1,25-60 12.9		
5	52102309	1	Bolt DIN 933 M10-30 8.8		
6	60500064	1	Butt Washer		
7	40040086	1	Flange Ø 40 Shaft Key		

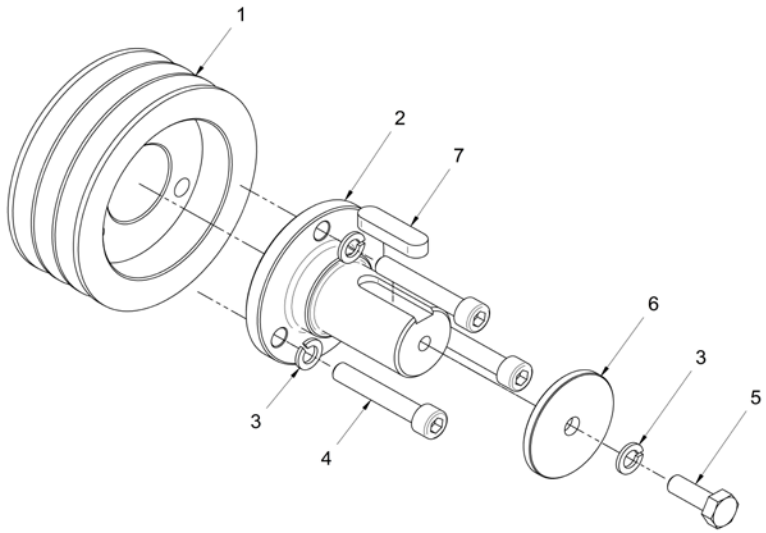

Power Take-off Pulley

	17210128		Kit Power Take-Off Shaft D40		
FIG.	**REF.**	**QTY**	**DESCR.**	**FROM**	**UPTO**
1	17210049	1	PTO Shaft, D40		
2	53033010	4	Washer GROWER DIN 127-10		
3	52203308	3	Bolt DIN 912 M10-1,25-25 12.9		
4	52102309	1	Bolt DIN 933 M10-30 8.8		
5	60500064	1	Butt Washer		
6	40040086	1	Flange Ø 40 Shaft Key		

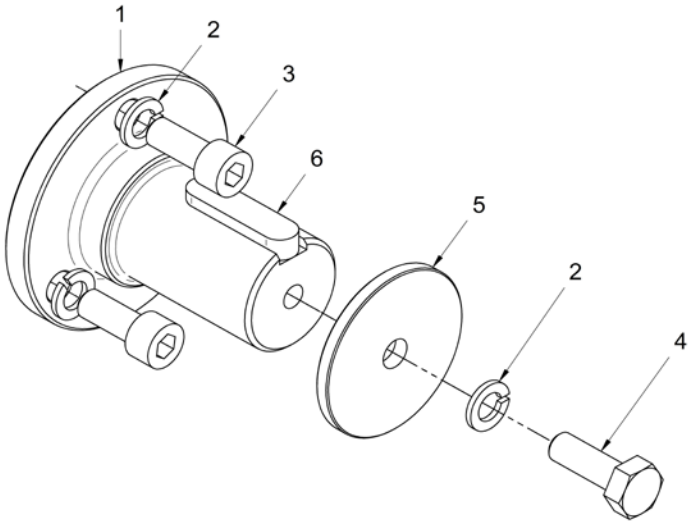

Power Take-off Pulley

	17210129		Kit Pulley 3A (S)		
FIG.	**REF.**	**QTY**	**DESCR.**	**FROM**	**UPTO**
1	17210203	1	Pulley 3A		
2	53033010	3	Washer GROWER DIN 127-10		
3	52203313	3	Bolt DIN 912 M10-1,25-50 12.9		

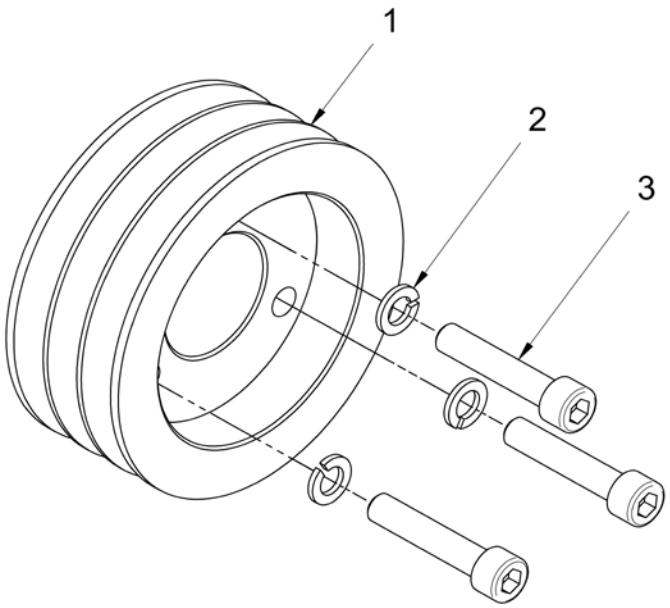

Kit Keel Cooling

	17211200		kit Keel Cooling & Dry Exhaust		
FIG.	**REF.**	**QTY**	**DESCR.**	**FROM**	**UPTO**
1	13120046	1	Cover Oil Pump SH		
2	13120047	1	Gasket Water Pump		
3	52101263	1	Bolt DIN 931 M8-50 8.8		
4	51030008	9	Washer DIN 125-8		
5	17011002	1	Cover		
6	13811007	2	O-Ring D. 57X2,5		
7	15113042	1	Cover Exhaust Flange		
8	15113043	1	Exhaust Elbow Gasket		
9	13911002	1	Cover		
10	13311005	1	Plug		

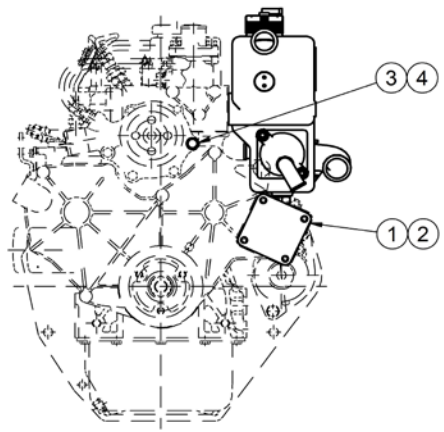

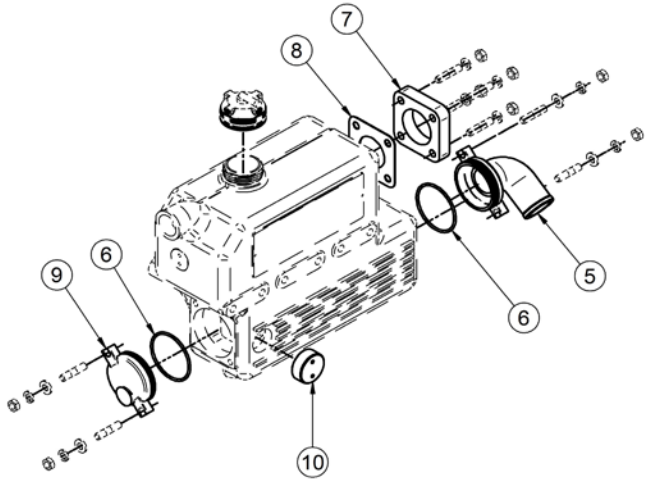

Kit Keel Cooling

17211200.1			Kit Keel Cooling & Dry Exhaust (S)		
FIG.	**REF.**	**QTY**	**DESCR.**	**FROM**	**UPTO**
1	13120046	1	Cover Oil Pump SH		
2	13120047	1	Gasket Water Pump		
3	13911002	2	Cover		
4	13811007	2	O-Ring D. 57X2,5		
5	15113042	1	Cover Exhaust Flange		
6	15113043	1	Exhaust Elbow Gasket		
7	52101263	1	Bolt DIN 931 M8-50 8.8		
8	51030008	1	Washer DIN 125-8		

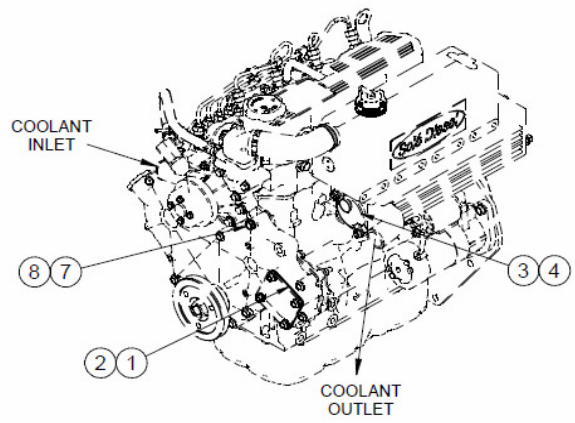

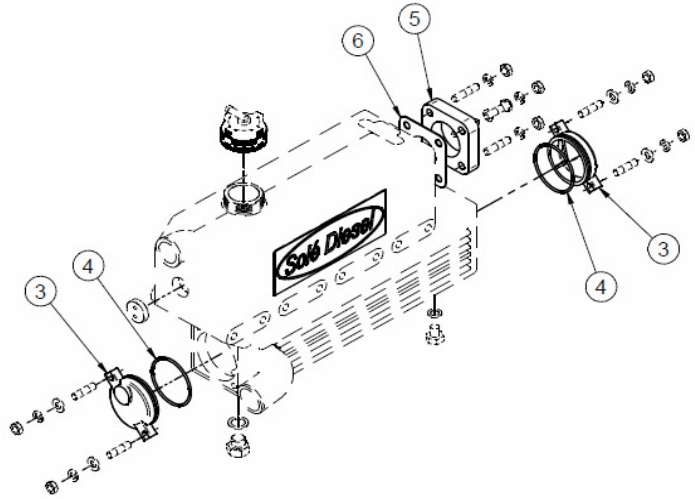

Kit Keel Cooling

	17211210		Kit Refroid. Quille et Esc. Sec TM-345		
FIG.	**REF.**	**QTY**	**DESCR.**	**FROM**	**UPTO**
1	17222027.1	1	Flywheel		
2	53038008	6	Washer DIN 6798-A 8		
3	52102257	11	Bolt DIN 933 M8-20 8.8		
4	17210071	1	Flexible Coupling Type B SAE 6"1/2		
5	13410018	1	SAE 7,adaptor flange		
6	53033012	6	Washer GROWER DIN 127-12		
7	52102358	2	Bolt DIN 933 M12-25 8.8		
8	52202360	1	Bolt DIN 933 M12-1,25-35 8.8		
9	18012041	1	Bracket,TM93/170 oil cooler		
12	12120018	2	Stud		
13	53033008	9	Washer GROWER DIN 127-8		
14	52120008	7	Nut DIN 934 M8 8.8		
15	24810913	1	Clamp,CABLE		
16	51030005	2	Washer DIN 125-5		
17	18619020	1	Bracket,Gear box control	02/10/2004	
18	19011011	1	Pipe,water inlet		
19	13611038	1	Pipe 30-40-75		
20	54082025	6	Clamp DIN 3017 25-40/12 W4		
20	54082032	4	Clamp DIN 3017 32-50/12 W4		
21	15212022	1	Elbow	15/02/2017	
21	15312009	2	Elbow		14/02/2017
22	14712051	1	Cooler,oil		
23	14712015	2	Bolt,Coupling pipe oil		
24	57000375	4	Washer 17-22-1,5		
25	52102154	2	Bolt DIN 933 M6-10 8.8		
26	53033006	2	Washer GROWER DIN 127-6		
27	51030006	7	Washer DIN 125-6		
28	52102156	1	Bolt DIN 933 M6-16 8.8		
29	52120006	1	Nut DIN 934 M6 8.8		
30	17211016	1	Bracket,Pipe		
30	18011016	1	Bracket,pipe		
31	17610008	1	HANGER,Engine		
32	18011020	1	Pipe		
32	52202361	1	Bolt DIN 933 M12-1,25-40 8.8		
33	17010003	1	Bracket		

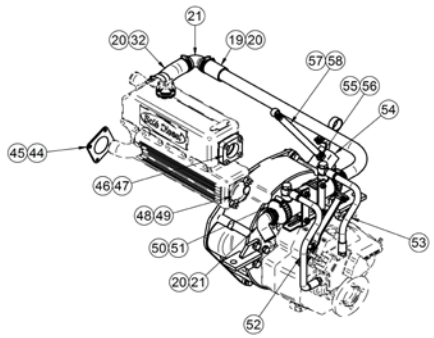

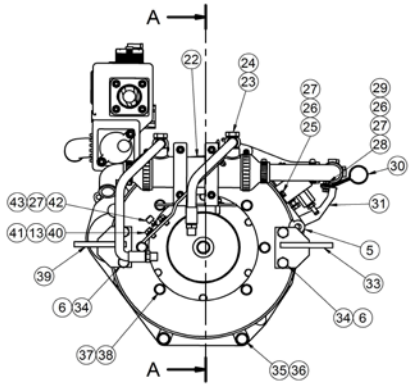

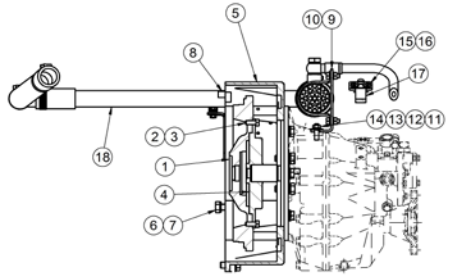

[NS] Not shown

Kit Keel Cooling

17211210			Kit Refroid. Quille et Esc. Sec TM-345		
FIG.	**REF.**	**QTY**	**DESCR.**	**FROM**	**UPTO**
34	52102359	4	Bolt DIN 933 M12-30 8.8		
35	52202359	3	Bolt DIN 933 M12-1,25-30 8.8		
36	53038012	3	Washer DIN 6798-A 12		
37	53038010	5	Washer DIN 6798-A 10		
39	17010004	1	Bracket		
41	51030008	4	Washer DIN 125-8		
42	ALLPA.93	1	Coupling,cable	23/05/2017	
42	14719115	1	Coupling,cable		23/05/2017
43	51051107	1	Pin DIN-94 1,6-16		
44	13120046	1	Cover Oil Pump SH		
45	13120047	1	Gasket Water Pump		
46	15113043	1	Exhaust Elbow Gasket		
47	15113042	1	Cover Exhaust Flange		
48	13811007	2	O-Ring D. 57X2,5		
49	13911002	2	Cover		
50	54082050	2	Clamp DIN 3017 50-70/12 W4		
51	15312007	2	Cover, water cooler D 30		
52	17012024	1	Pipe		
53	18512024	1	Pipe		
54	13814070	1	Electric Fuel Feed Pump 12V		
55	57000361	2	Washer 10-14-1,5	01/06/2013	
56	13814072	2	NIPPLE EYE		
58	13814012	1	Pipe	25/09/2007	
NS	58088282	2	Pastic Cable Zip Tie [NS]	17/01/2014	
NS	59072604	2	Clamp [NS]	29/03/2014	
NS	60900126	1	TERMINAL [NS]		

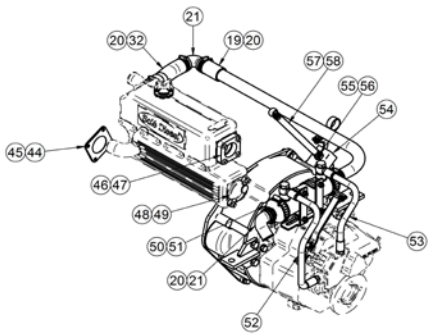

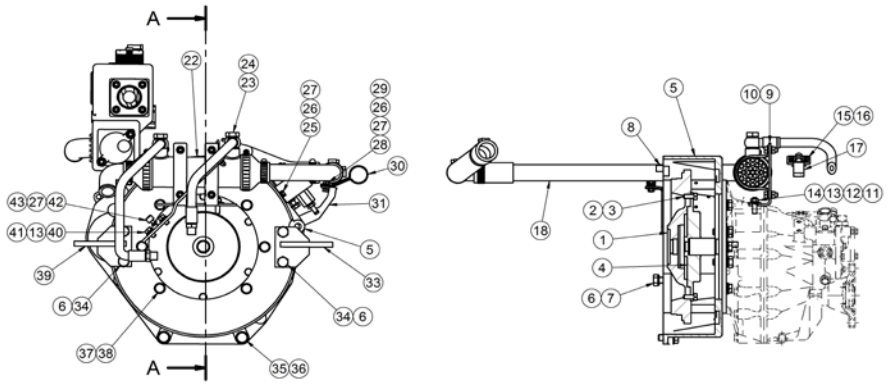

Kit Instrument Panel SVT

17217217			Suplement Panel SVT 30 MINI-33/44/55		
FIG.	REF.	QTY	DESCR.	FROM	UPTO
1	60900985	1	Pressure Sensor		
2	17117052	1	Oil Pressure Sensor Adaptor		
3	60972132	1	SVT 30 MINI-33/44/55 Panel		
NS	TFH.1M.6.3.08	1	Straight Receptacle 1 Sec. Faston [NS]		
NS	60900063	1	Insulator Cap Faston 6.3 [NS]		

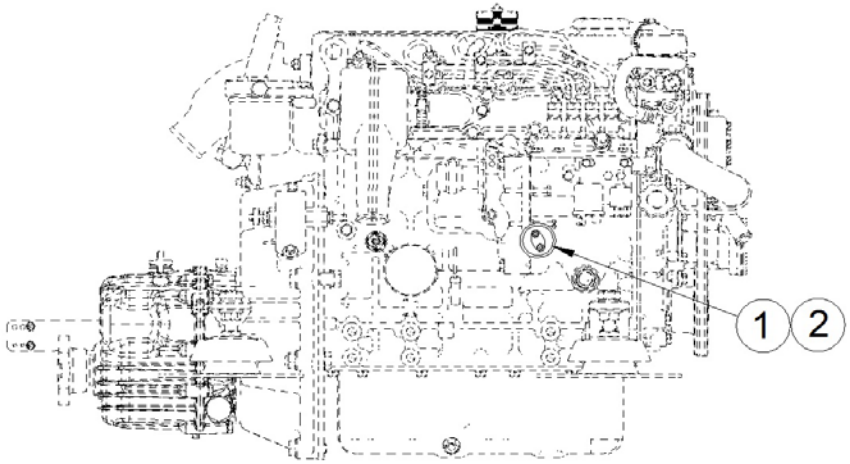

[NS] Not shown

Kit Instrument Panel SVT

60910022			SVT 20 Panel 12V + Exh. Temp. Alarm Kit		
FIG.	**REF.**	**QTY**	**DESCR.**	**FROM**	**UPTO**
1	60900280	1	Exhaust Temperature Alarm Kit		
2	60910001	1	SVT 20 Panel 12V		

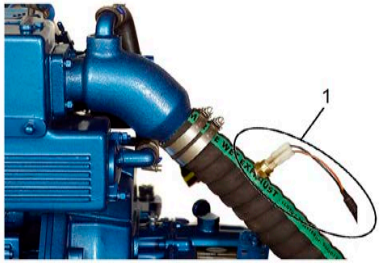

Kit Instrument Panel SVT

60910024			SVT 30 Panel 12V + Exh. Temp. Alarm Kit		
FIG.	**REF.**	**QTY**	**DESCR.**	**FROM**	**UPTO**
1	60900280	1	Exhaust Temperature Alarm Kit		
2	60910004	1	SVT 30 Panel 12V		

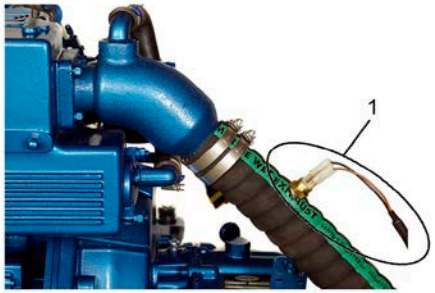

Kit Instrument Panel SVT

60972136			Kit 2nd Panel SVT 30/40 MINI-33/44/55		
FIG.	REF.	QTY	DESCR.	FROM	UPTO
1	60900985	1	Pressure Sensor		
2	17117052	1	Oil Pressure Sensor Adaptor		
3	60972135	1	SVT 40 MINI-33/44/55 Panel		
4	60972132	1	SVT 30 MINI-33/44/55 Panel		
5	60900210.2	1	T Double Panel DERIVATION		
NS	TFH.1M.6.3.08	1	Straight Receptacle 1 Sec. Faston [NS]		
NS	60900063	1	Insulator Cap Faston 6.3 [NS]		

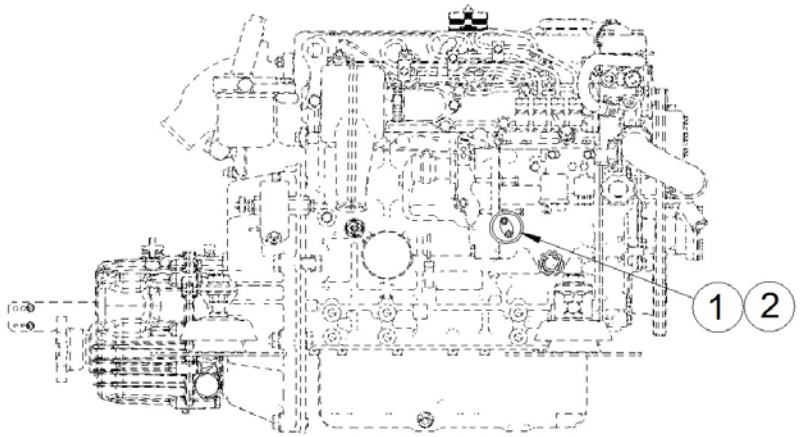

[NS] Not shown

Kit Instrument Panel SVT

60972137			Kit 2nd Panel SVT 40 MINI-33/44/55 12V		
FIG.	**REF.**	**QTY**	**DESCR.**	**FROM**	**UPTO**
1	60972130	1	SVT 20 MINI-33/44/55 Panel		
2	60972135	1	SVT 40 MINI-33/44/55 Panel		
3	60900210.2	1	T Double Panel DERIVATION		

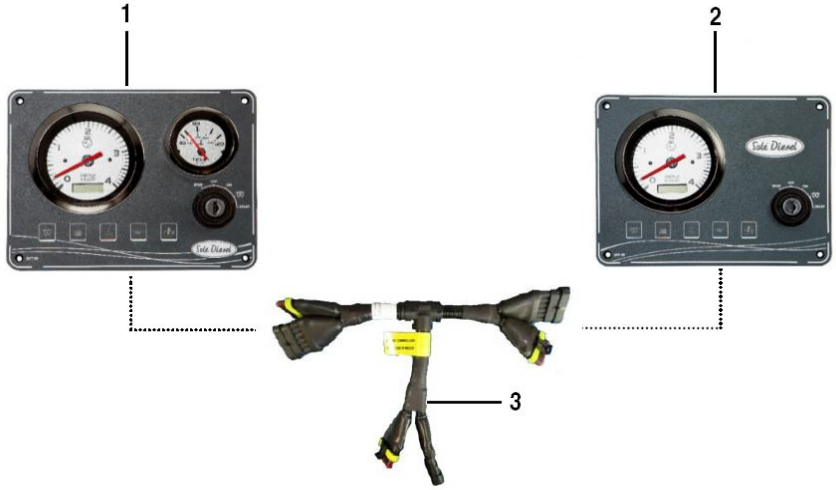

Kit Instrument Panel SVT

60972138			Kit 2nd Panel SVT 40 MINI-33/44/55 24V		
FIG.	REF.	QTY	DESCR.	FROM	UPTO
1	60973130	1	SVT 20 MINI-33/44/55 24V Panel		
2	60973131	1	SVT 40 MINI-33/44/55 24V Panel		
3	60900210.2	1	T Double Panel DERIVATION		

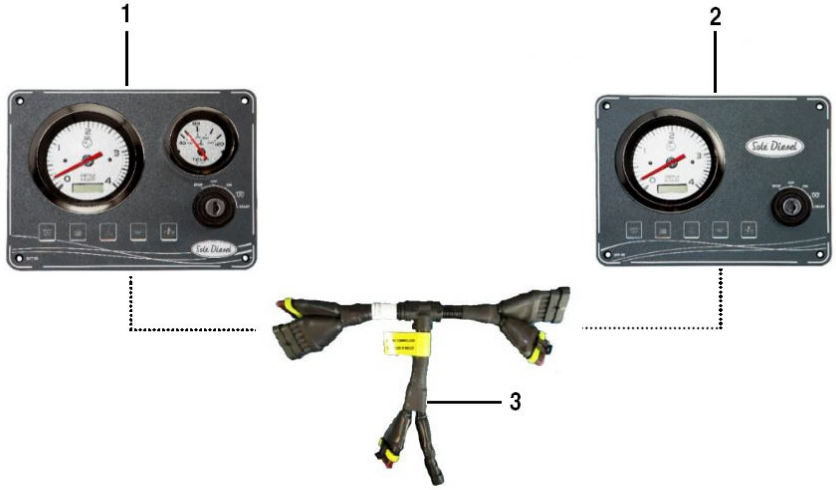

Kits NMEA 2000 - one engine

	61472100		Kit SDC 2000 MINI-33/44/55 12V		
FIG.	REF.	QTY	DESCR.	FROM	UPTO
1	61400200	1	Kit SDC 2000 24V Standard		
2	60900091	2	MICRO Relay 12V 12-20		

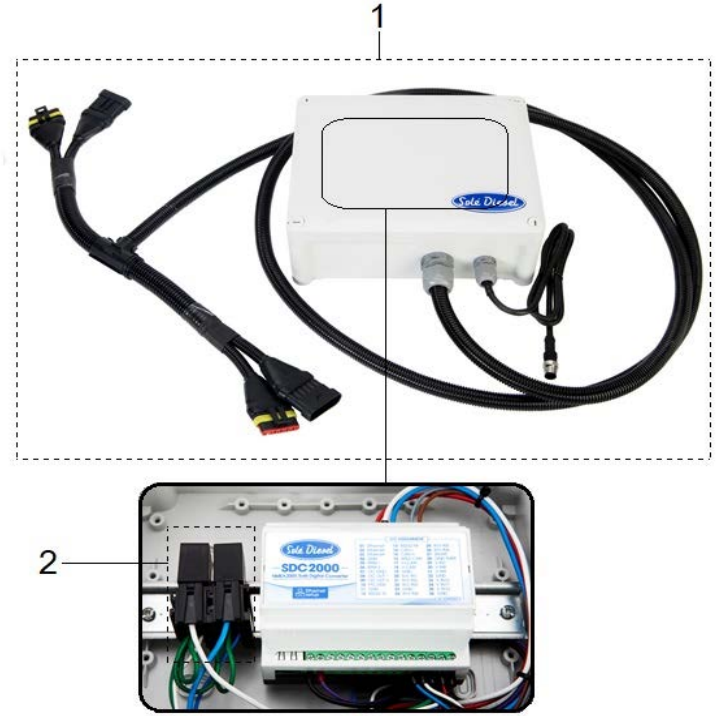

Kits NMEA 2000 - one engine
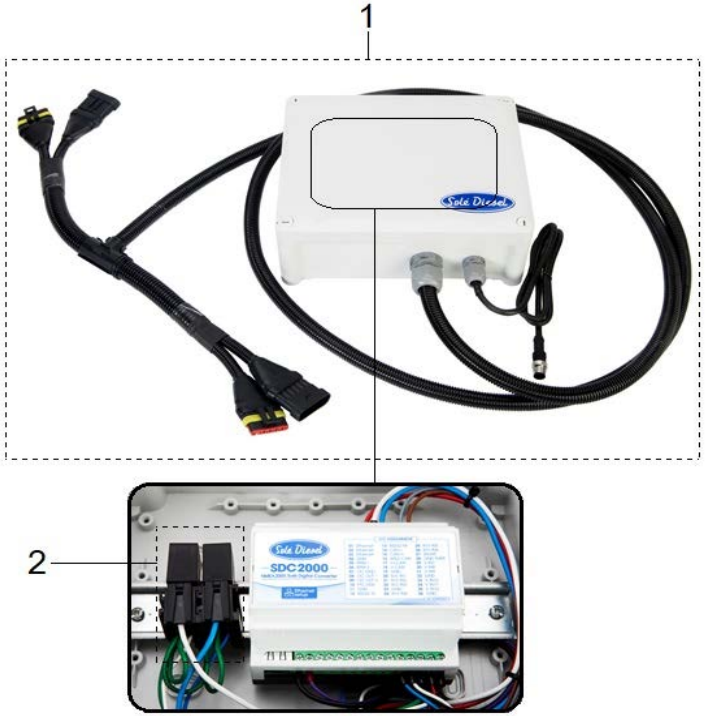
	61472200		Kit SDC 2000 MINI-33/44/55 24V		
FIG.	REF.	QTY	DESCR.	FROM	UPTO
1	61400200	1	Kit SDC 2000 24V Standard		
1	60900092	2	MICRO Relay 24V 24-10