Engine Mini-44 v4

VERSION 2018-2

SPARE PARTS MANUAL

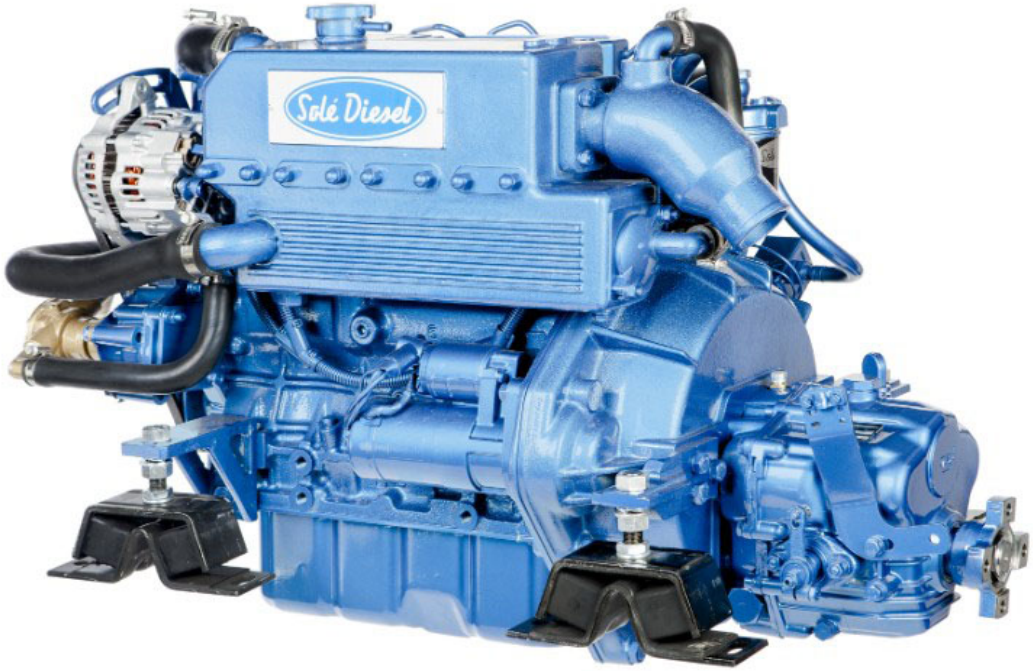

PARTS LIST CATALOGUE

NORMS TO PLACE AN ORDER:

For fast and more efficient service, please specify the following information on spare parts orders that must be preferably done by FAX or e-mail as specified below:

1- Engine model: As shown in identification plate

2- Engine serial number: As shown in identification plate and stamped on crankcase

3- Item description + part number + quantity required

Spare parts requests must be adressed to:

recambios@solediesel.com

Telf.: +34 93 775 44 05

Fax: +34 93 775 30 13

The components shown in the catalog have:

- Figure: Number by which they are represented in scheme
- Description: Trade name of the component
- Quantity: Total number of parts used in the assembly of the part represented (may differ from the total minimum quantities)

Hoses, indicates the total length in meters

The diagrams shown in this catalog of spare parts, have only the purpose to identify the piece in question, its representation is not meaningful and may differ from the actual piece.

In case of doubt, contact Solé Diesel, or your authorized dealer.
The parts i / or references in this catalog are subject to change without notice.

SOLÉ, S.A.

C-243b, Km, 2 - P.O. BOX 15

08760 Martorell (Barcelona) Spain

Download the latest version of this manual HERE

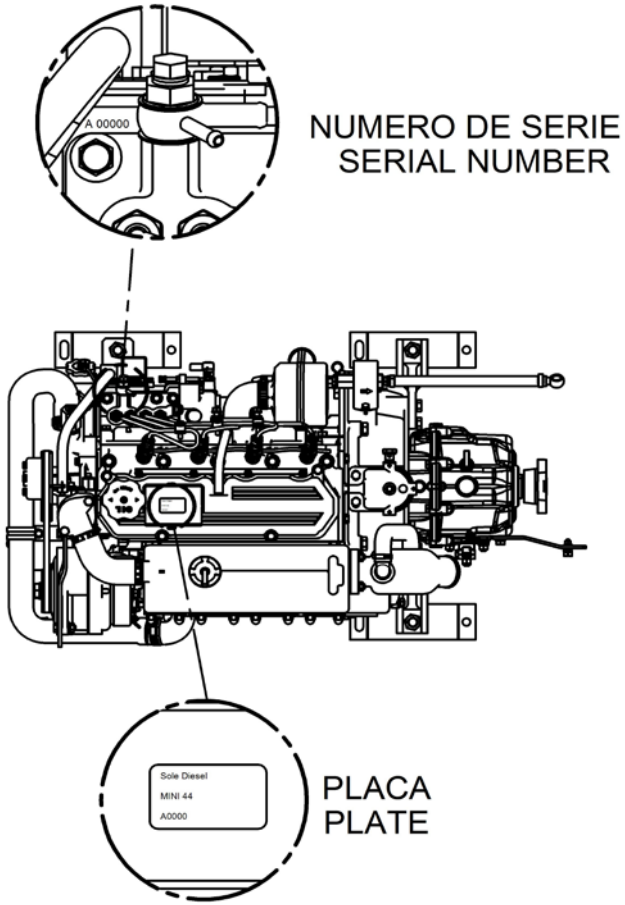

Contents

Engine Body
Cylinder Head
Rocker Cover and Breather
Valve Drive
Timing Parts
Gear Case
Cranckcase
Rear Plate
Piston & Connection Rod
Crankshaft & Flywheel
Oil System
Oil Pan
Engine Brackets

Inlet & Exhaust
Inlet

Cooling System
Water Pump
Cooler Pipes
Water Cooler Assy MINI-44
Body, Water Cooler And Cap
Wet Exhaust
1/2" Pump Water, Set
1/2" Pump Water, Set

Fuel System
Fuel Pipe
Injection Noozle
Fuel Injection Pump
Governor Parts
Fuel Supply Parts

Electrical System 12V
Kit Alternator 14V.95A.
Contents
Electrical Wiring
Deluxe Instrument Panel
SVT 20 MINI-33/44/55 Panel
SVT 30 MINI-33/44/55 Panel

Electrical System 24V
Kit Alternator 28V/55A
Starter Assy. 24V
24V Electrical Wiring
TE4 Panel

Maintenance Kit
Gasket Kit
Pipe Rubber Set, Water Line
Gasket Set
Repair Kit Water Pump 1/2"
Repair Kit Water Pump 1/2"

Gearbox TTMC35A2-B4
Housing 1/5
Input & Intermediate Shaft 2/5
Output Shaft 3/5
Remote Control Device 4/5
Remote Control Pasive Unit 5/5

Gearbox TMC-60P
Sheet 1/2
Sheet 2/2
Kit de Service

Gearbox TMC-60A
Sheet 1/2
Sheet 2/2
Kit de Service

Gearbox TMC-260
Sheet 1/3
Sheet 2/3
Cooling System 3/3
Maintenance Kit

SP60 S.Drive
Sheet 1/4 SP60 S.Drive V1
Sheet 2/4 SP60 S.Drive V1
Sheet 3/4 SP60 S.Drive V1
Sheet 4/4 SP60 S.Drive V1
Sheet 1/4 SP60 S.Drive V2
Sheet 2/4 SP60 S.Drive V2
Sheet 3/4 SP60 S.Drive V2
Sheet 4/4 SP60 S.Drive V2
Maintenance Kit

TM-345 Gearbox
Sheet 1/4
Sheet 2/4
Sheet 3/4
Sheet 4/4
Maintenance Kit

TM-345A Gearbox
Sheet 1/4
Sheet 2/4
Sheet 3/4
Sheet 4/4
Maintenance Kit

Gearbox TM-93
Sheet 1.1/4
Sheet 1.2/4
Sheet 1.3/4
Intermediate Shaft 2/4
Input Shaft 3/4
Output Shaft 4/4
Maintenance Kit

GearBox ZF-15 MIV
Sheet 1/2
Sheet 2/2

Elements Supports
Motor Bracket, Width 255

Kit Gearbox
Kit S-Drive VOLVO 120SB/120SC/120SE
Kit S-Drive VOLVO 110S
Kit Z-Drive VOLVO 270/280/290 Z=10
Kit Z-Drive VOLVO 270/280/290 Z=10
Kit GearBox VOLVO MS-2 & MS-2B
Kit S-Drive VOLVO 130S
Kit Z-Drive VOLVO 280/290 Z=26
Kit S-Drive BUKH DV36
Kit GearBox TM-93
Kit GearBox TM-345/A
Kit GearBox TM-345/A (Without Cooler)
Kit JET CASTOLDI Num.3
Kit JET CASTOLDI Num.5 SAE 5
Kit GearBox PRM-150 Without Oil Cooler

Kit GearBox BW (Without Oil Cooler)
Kit GearBox BORG WARNER With Oil Cooler
Kit GearBox PRM-160 SAE 5
Kit GearBox HURTH-150A,ZF 15M IV
Kit GearBox TMC-60/60A W/ Cable support
Kit GearBox TTMC35
Kit GearBox TMC-260
Kit GearBox TMC-60/ZF/PRM
Kit S-Drive TECHNO.SP60
Kit GearBox TMC-260

Electrical System

Kit SOLAS 12V With Capsizing Sensor
Kit Isolated SOLAS
Kit 2nd Alternator 28V/55A
Kit 2nd Alternator 14V/90A
Kit Wire Earth Isolated Alternator 14V/9
Kit 24V Engine Elec. System & SVT 30 V.3
Kit 24V Engine Electrical System v3
Kit Water Leak Sensor & Alarm SP60 12V

Other Kits

SAE 5,Adaptor Flange
Pressure Gauge Kit 10 BAR
Kit Trolling Valve for TM-93/A
Kit Trolling Valve for TM-345/A
Motor Bracket Width 195
Motor Bracket Width 205
Motor Bracket Width 220
Kit Pump LEDUC XP25
Kit Bobtail SAE-7
Boiler Kit (S)
Kit Cooler Assy TMC-60

Exhaust System

Exhaust Flange (S)
Kit Dry Exhaust With Flexible Pipe (S)
Kit Dry Exh. Flexible Pipe & Silencer(S)

Power Take-off Pulley

Pulley 2B (S)
Pulley 2A (S)
Kit Power Take-off Shaft D40 & Pulley 3A
Kit Power Take-Off Shaft D40
Kit Pulley 3A (S)

Kit Keel Cooling

Kit Keel Cooling & Dry Exhaust (S)
Kit Refroid. Quille et Esc. Sec TM-345
Kit Refroid. Quille et Esc. Sec
Kit GearBox TM-345 With Keel Cooling

Kit Instrument Panel SVT

Suplement Panel SVT 30 MINI-33/44/55
SVT 20 Panel 12V + Exh. Temp. Alarm Kit
SVT 20 24V Panel + Exh. Temp. Alarm Kit
SVT 30 Panel 12V + Exh. Temp. Alarm Kit
SVT 30 24V Panel + Exh. Temp. Alarm Kit
Kit 2nd Panel SVT 30/40 MINI-33/44/55
Kit 2nd Panel SVT 40 MINI-33/44/55 12V
Kit 2nd Panel SVT 40 MINI-33/44/55 24V

Kits NMEA 2000 - one engine

Kit SDC 2000 MINI-33/44/55 12V
Kit SDC 2000 MINI-33/44/55 24V

Engine Body

D_MID1_1_1			Cylinder Head		
FIG.	REF.	QTY	DESCR.	FROM	UPTO
1	17721001	1	Head Assy,Cylinder		
2	(*)	10	Not available [NP]		
2A	17221012.4	1	Cap Sealing		
2B	13220012	7	Cap Sealing		
2E	17221002.4	4	Guide, Valve Exhaust [NP]		
2F	17321003.4	4	Guide, Valve, Inlet		
2G	17321015.1	4	JET,COMBUSTION [NP]		
3	17621011.4	1	Plug TAPER		
4	17221005	14	Bolt,cylinder head		
5	17321004	1	Gasket, Cylinder Head		
6	17210008	2	HANGER, Engine		
7	13322079	2	Bolt		

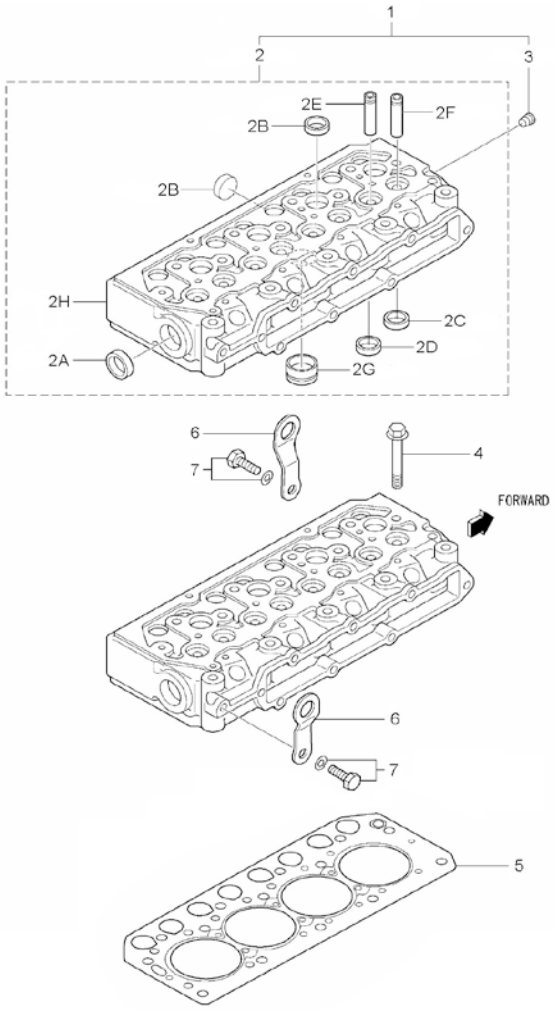

[NP] Not provided

Engine Body

D_MID1_1_2			Rocker Cover and Breather		
FIG.	REF.	QTY	DESCR.	FROM	UPTO
1	17321009	1	Cover Assy, Rocker		
2	17321010	1	Rocker Cover Gasket		
3A	52101261	5	Bolt DIN 931 M8-40 8.8		
3B	53033008	5	Washer GROWER DIN 127-8		
4	13221003	1	Cap Oil FILLER		
5	17321006.4	1	Hose Breather		

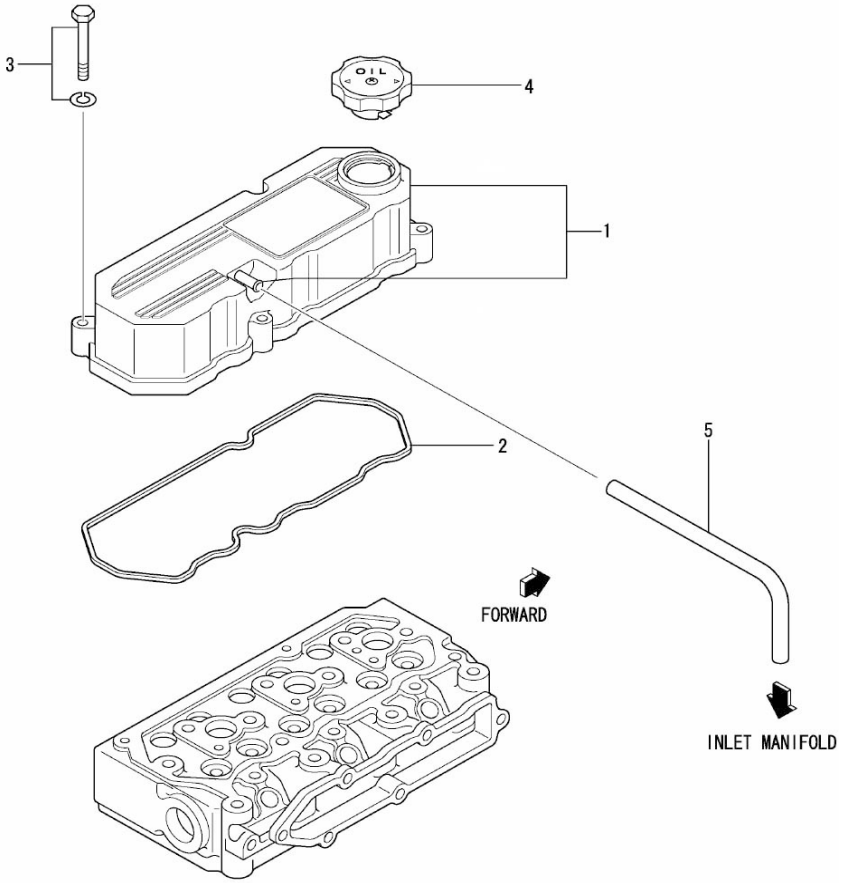

Engine Body

D_MID1_1_3			Valve Drive		
FIG.	REF.	QTY	DESCR.	FROM	UPTO
1	17222055	4	Intake Valve		
2	17222056	4	Exhaust Valve		
3	17222057.4	8	Rocker Shaft Support		
4	13822058	8	Retainer Valve SP		
5	17622059.4	16	LOCK Valve		
6	13222054	8	Seal Valve Stem		
7	13822069	8	Cap Stem		
8	(*)	1	Not available [NP]		
8A	17222053	1	Bolt		
8B	17222050	2	Ring, SNAP		
8C	17222142	8	Rocker Assy		
8CA	17122060	8	Nut		
8CB	17122044	8	Screw Adjusting		
8D	17222048.4	1	Bracket, Rocker Shaft		
8E	17222049.4	3	Bracket, Rocker Shaft		
8F	17322146.4	1	Rocker & Shaft Assy		
8FA	17222025.4	2	Cap, Sealing [NP]		
8FB	17322046.4	1	Shaft Assy, Rocker		
8G	17122053	4	Bolt		
8H	17222047.4	3	Spring		

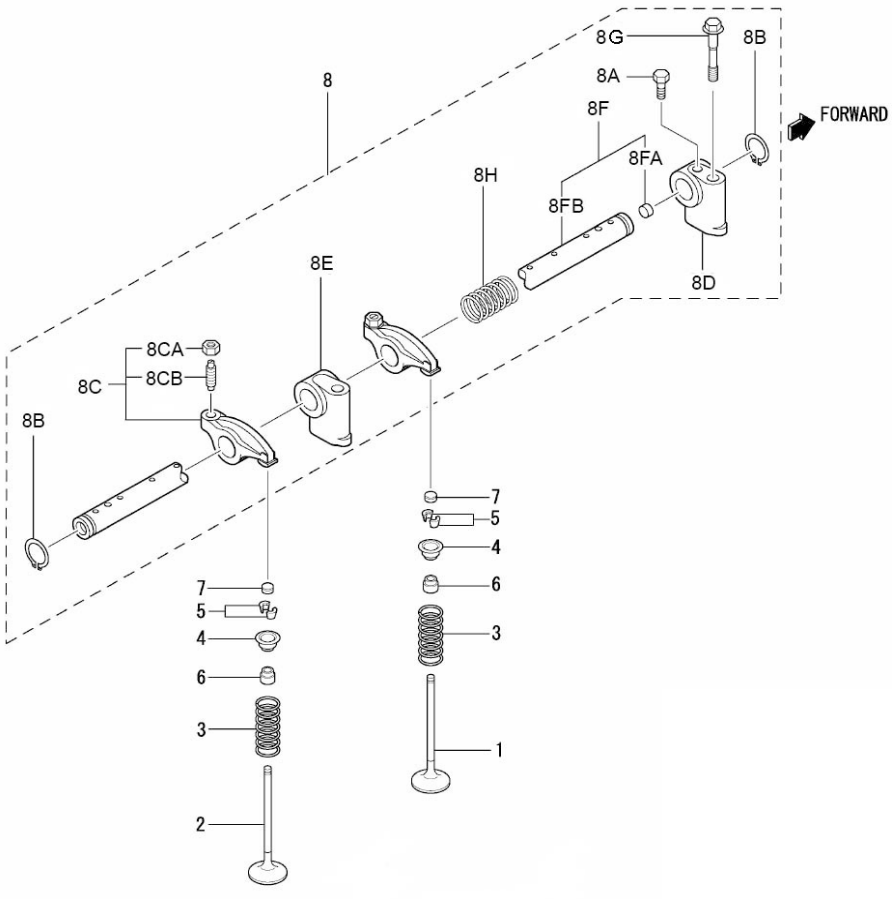

[NP] Not provided

Engine Body

D_MID1_1_4			Timing Parts		
FIG.	REF.	QTY	DESCR.	FROM	UPTO
1	17322040.4	1	Shaft, Fuel Injection Pump		
2	13222062	1	Ball Bearing 6228		
3	17222065	1	Washer		
4	17622060.4	1	Key, Sunk		
5A	52102256	3	Bolt DIN 933 M8-15 8.8		
5B	53033008	3	Washer GROWER DIN 127-8		
6	17322035.4	1	CamShaft [NP]		
7	17222020.4	1	KEY		
8	17422075	1	Plate,THRUST		
10	17322061.4	8	Tappet		
11	17222041	8	ROD, PUSH		
12	17322037.4	1	Gear, CamShaft		
13	17322043.1	1	Gear,Injection Pump		
14	17222038.4	1	Gear Assy, IDLER		
15	17322066.4	1	Gear, Pressure Oil Pump [NP]		
16	17022067	2	Ball Bearing 6205-C3		
17	17311026	1	Coupling,Water Pump		

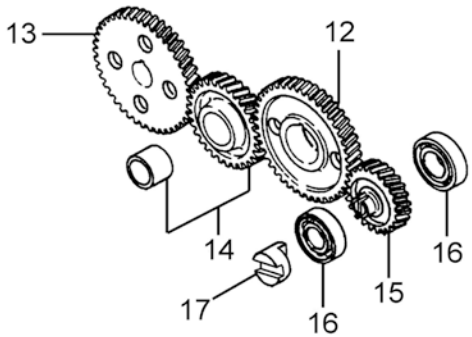

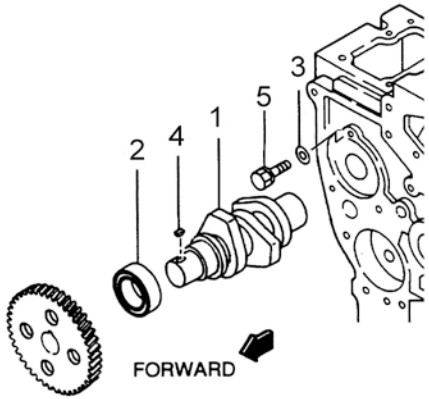

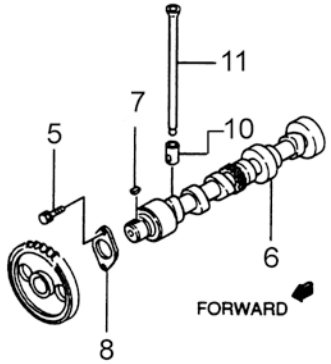

[NP] Not provided

Engine Body

D_MID1_1_5			Gear Case		
FIG.	REF.	QTY	DESCR.	FROM	UPTO
1	17220024	1	Plate, Front		
2	17220018	1	Gasket, Front Plate		
3A	52102256	5	Bolt DIN 933 M8-15 8.8		
3B	53033008	12	Washer GROWER DIN 127-8		
4	17220035	1	Case Gear		
5	17220040	1	Gasket, Gear Case		
6	17220034.4	8	Bolt		
7	13220039	1	Seal Oil		
8	17220037	1	Housing, Gear Pump		
9	17220038	1	Gasket, Housing		
10	13120046	1	Cover Oil Pump SH		
11	13120047	1	Gasket Water Pump		
12	13322078	1	Bolt		
13A	52101260	1	Bolt DIN 931 M8-35 8.8		
14	17120049	2	Nut M8		
15	17024062	2	Bolt		
16	17011007	1	O-Ring D. 57X3		
17	13811062	4	Pump Bracket		
18	51030008	4	Washer DIN 125-8		
19	52102257	4	Bolt DIN 933 M8-20 8.8		
20	17621003	1	Cap Oil FILLER		

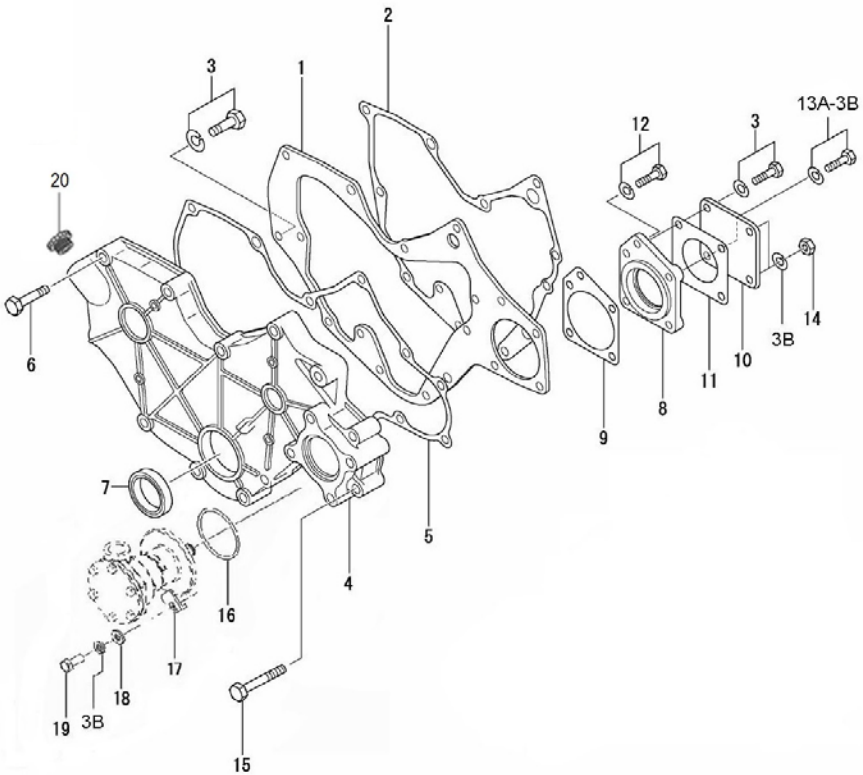

Engine Body

	D_MID1_1_6		Cranckcase		
FIG.	REF.	QTY	DESCR.	FROM	UPTO
1	17320001.4	1	Block Assy, Cylinder		
2A	17220006.4	3	Cap, Sealing [NP]		
2B	17221012.4	3	Cap Sealing		
2C	17220009	10	Bolt Bearing Cap		
2D	17220011	1	Bushing, CamShaft		
2E	(*)	2	Not available [NP]		
3	17620007.4	1	Guide		
4	17220012.4	1	Cap, Sealing		
5	17220013	3	Cap, SealING		
6	17220013.4	2	Plug		
7	17220010.4	4	BUSHING,KNOCK		
8	17620022.4	2	BUSHING,KNOCK		
9	17220022.4	1	BUSHING,KNOCK		
10	17220019	1	Plug, Expansion		
11	17620020.4	1	Pin		
12	17620036.4	2	Pin Dowel		
13	17220014.4	1	Shaft Assy, IDLER		
13A	17220028	1	Ball		
14	17220002	4	Seal, Side		
15	17720011	2	Plug,TAPERED		
16	17120019	2	Pin, dowel		
17	17220023.4	1	Plug, TAPER		
18	17020014	1	Cap		
19	17620024.4	5	Plug TAPER		
20	17220015.4	1	Case, Oil Seal		
21	17220016	1	Gasket, Oil Seal Case		
22	17220063	1	Seal, Oil		
23	17220059.4	5	Bolt		
24	17120022	1	Plug, tapered		
25	13220003	1	Bearing Set CRANK		
26	13220004	1	Bearing Set CRANK		
27	13220005	1	Bearing Set CRANK		
28	13220006	1	Bearing Set CRANK		
29	17624047.4	1	Shaft Oil Filter		

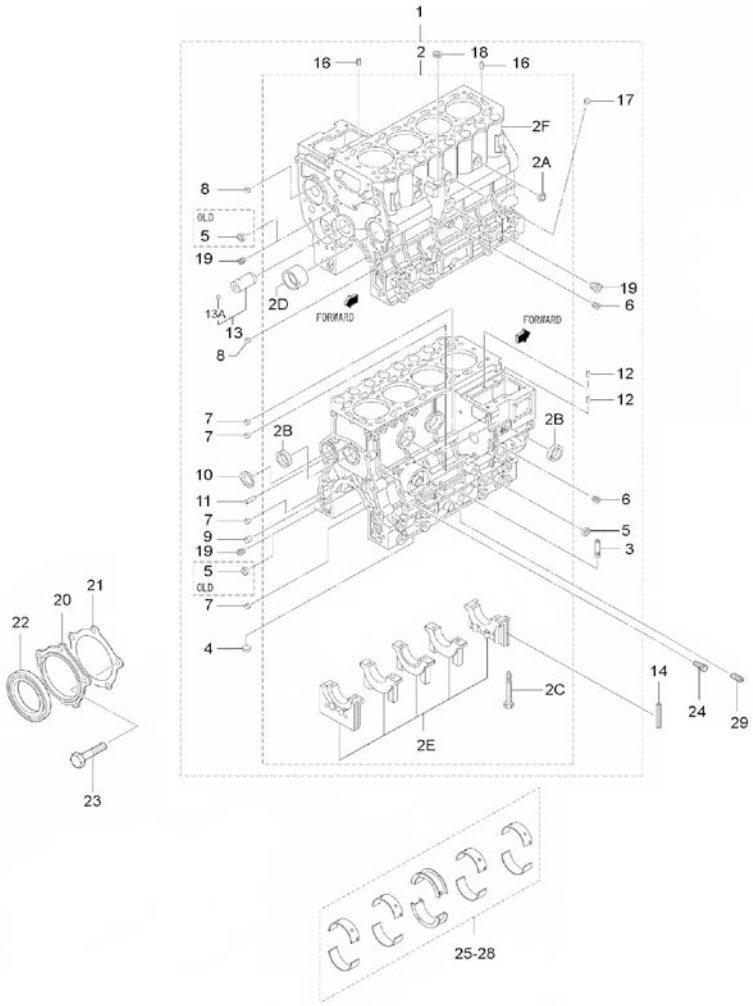

[NP] Not provided

Engine Body

D_MIC1_1_7			Rear Plate		
FIG.	REF.	QTY	DESCR.	FROM	UPTO
1	17220017	1	Plate, REAR		
2	13220026	2	Pin KNOCK (10X12)		
3A	52202359	8	Bolt DIN 933 M12-1,25-30 8.8		
3B	53033008	8	Washer GROWER DIN 127-8		

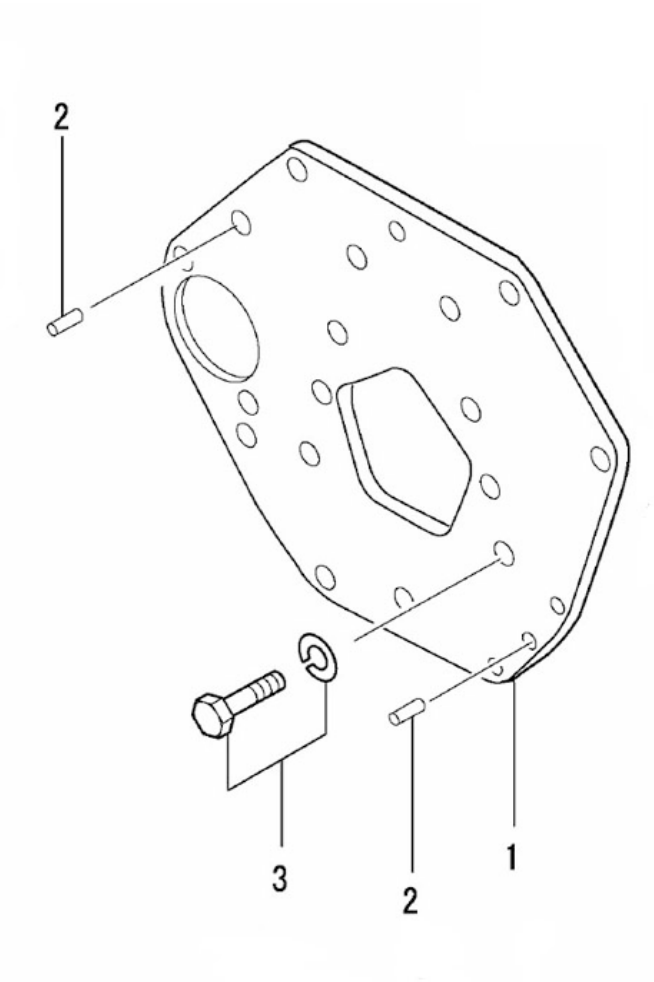

Engine Body

D_MID1_1_8			Piston & Connection Rod		
FIG.	REF.	QTY	DESCR.	FROM	UPTO
1	17222001	4	Piston STD.		
2	17222002	4	Piston + 0,25		
3	17222003	4	Piston + 0,50		
4	17222006	4	Ring Set, Piston STD		
5	17222007	4	Ring Set, Piston + 0,25		
6	17222007	4	Ring Set, Piston + 0,25		
7	17222009	4	Pin, Piston		
8	17322010.4	4	ROD Assy, CONNECTING		
8A	17022011	8	Nut,connecting rod		
8B	17222013	8	Bolt,connecting rod		
9	17222014	4	Metal Set, Con Rod STD.		
10	17222015	4	METAL Set, CON ROD - 0,25		
11	17222016	4	METAL Set, CON ROD - 0,50		
12	17222017	4	METAL Set, CON ROD - 0,75		

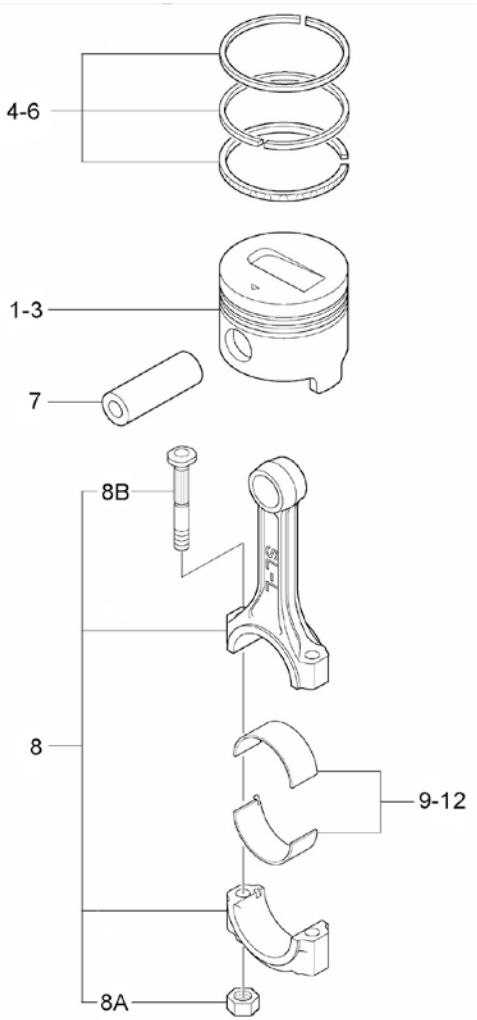

Engine Body

D_MID1_1_9			Crankshaft & Flywheel		
FIG.	REF.	QTY	DESCR.	FROM	UPTO
1	17322018	1	CrankShaft		
2	17222020.4	2	KEY		
3	17222051	1	Washer, Plain		
4	53033018	1	Washer GROWER DIN 127-18		
5	13222026	1	Nut		
6	17322024.4	1	Pulley CrankShaft		
7	17322027.4	1	Flywheel Sub Assy		
7A	13222029	1	Gear		
8	17222031.4	4	Bolt Drive		
9	17222021.4	1	Gear, CrankShaft		

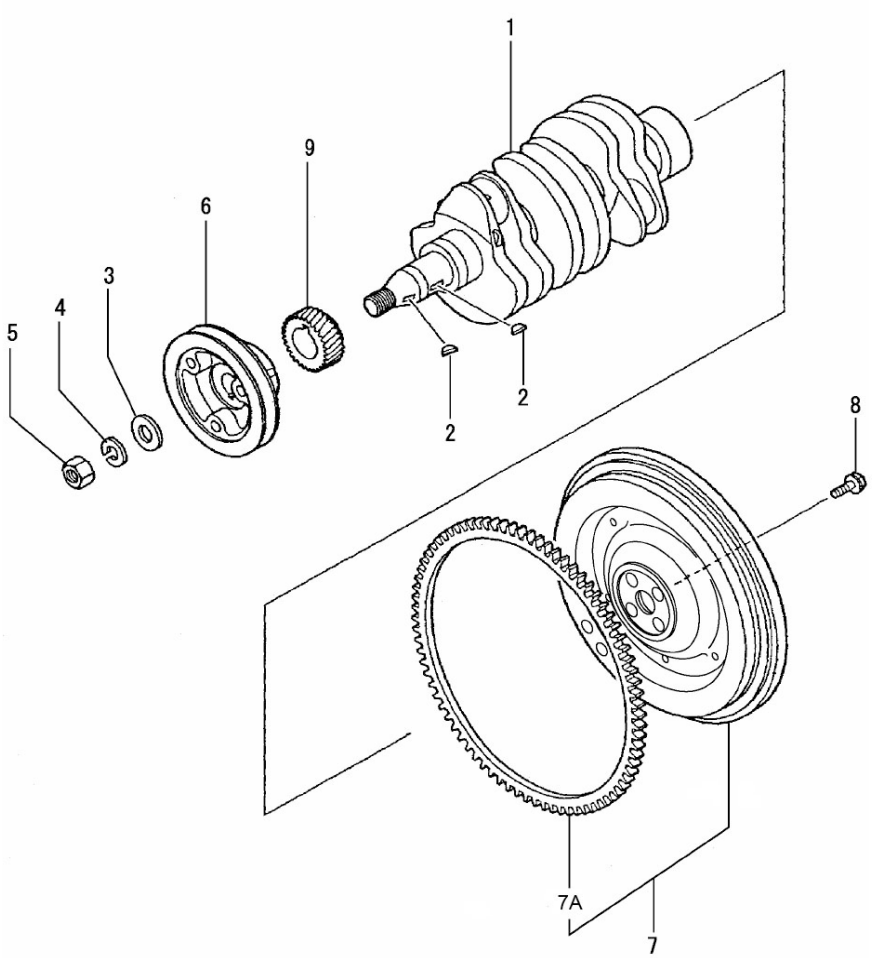

Engine Body

D_MID1_1_10			Oil System		
FIG.	REF.	QTY	DESCR.	FROM	UPTO
1	17224040	1	Pump Assy, Oil		
1A	17224041	1	Packing, Body		
2	52102258	3	Bolt DIN 933 M8-25 8.8		
3	17324052.4	1	SCREEN Assy Oil [NP]		
3A	51221016	1	Nut DIN 936 M16X1,5 5.6 ZINC		
4	17024001	1	Gasket		
5	17124071	1	Valve, Assy		
6	17424063	1	Gasket		
7	13124051	1	Filter Oil Element		
8	17327027.4	1	SWITCH, oil pressure		
9	17220029.4	1	Gauge Oil LEVEL [NP]		

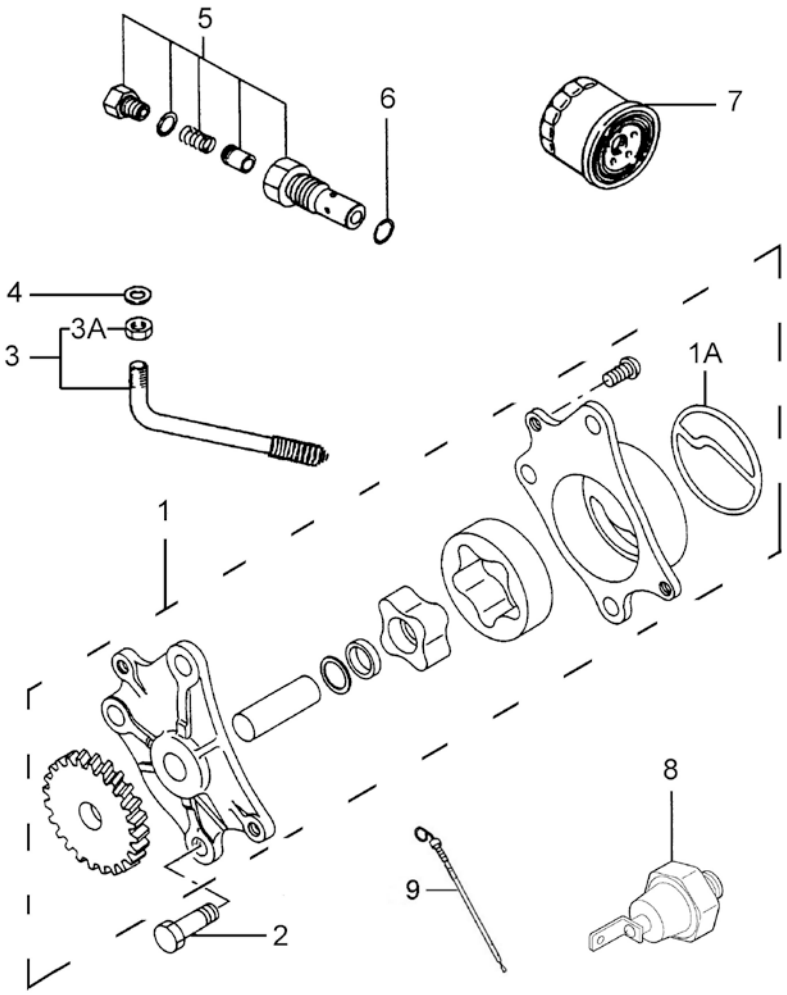

[NP] Not provided

Engine Body

D_MID1_1_11			Oil Pan		
FIG.	REF.	QTY	DESCR.	FROM	UPTO
1	17320030.4	1	Pan Assy, Oil		
2A	52102256	15	Bolt DIN 933 M8-15 8.8		
2B	53033008	15	Washer GROWER DIN 127-8		
3	17214021	1	ExtraCTION, Hose		
4	17214022	1	Bracket, Pipe		
5	12814051	1	Screw,eye		
6	56000217	1	Washer 13-20-3		
7	56000069	2	Washer 14-20-1,5		
8	52220012	1	Nut DIN 934 M12-1,25 8.8		
9	51030012	9	Washer DIN 125-12		
10	53038012	1	Washer DIN 6798-A 12		
11	52202363	1	Bolt DIN 933 M12-1,25-50 8.8		
12	16514020	1	Plug		
13	14714001	1	Pump,oil Suction		

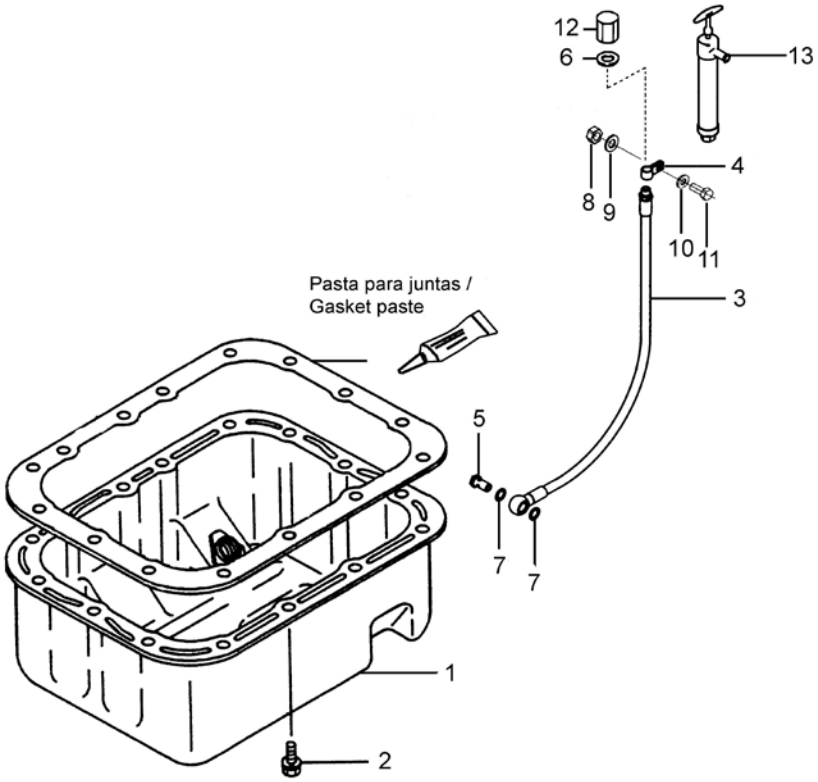

Engine Body

D_MIC1_1_12			Engine Brackets		
FIG.	REF.	QTY	DESCR.	FROM	UPTO
1	17210028	2	Bracket, Front	08/10/2014	
2	53033012	4	Washer GROWER DIN 127-12		
3	52202359	4	Bolt DIN 933 M12-1,25-30 8.8		
4	61673000	4	Anti Vibration Mount Type E 60SHA		

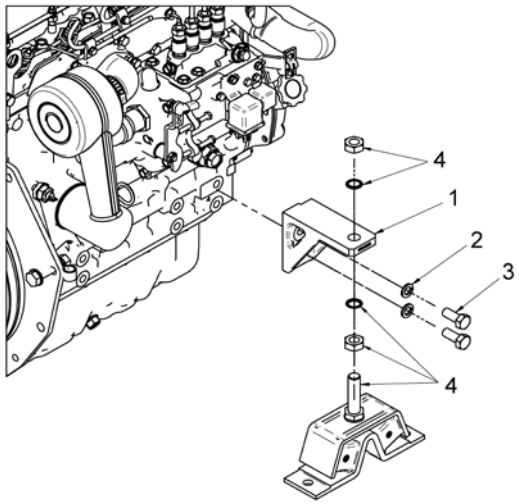

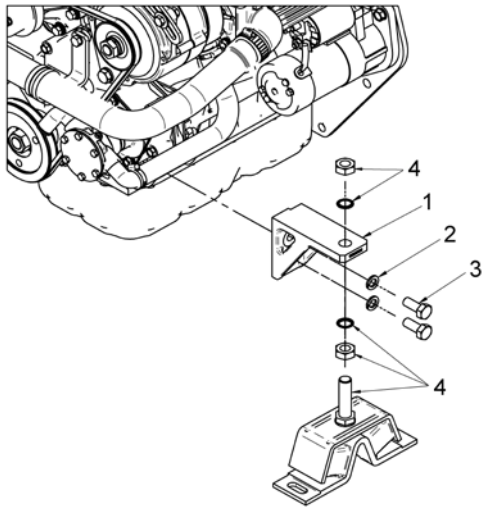

Inlet & Exhaust

D_MID1_2_1			Inlet		
FIG.	REF.	QTY	DESCR.	FROM	UPTO
1	17321030.4	1	Cover Assy, Inlet		
2	17321032.1	1	Gasket,Inlet Cover		
3A	52101260	5	Bolt DIN 931 M8-35 8.8		
3B	53033008	7	Washer GROWER DIN 127-8		
4	17321034.4	1	Pipe Inlet Gasket		
5	52105258	2	Bolt DIN 7991 M8-25 10.9		
6	17310021	1	Inlet Flange		
8	52102257	2	Bolt DIN 933 M8-20 8.8		
9	17221034	1	Gasket, Inlet Pipe		
10	17210020	1	BEND		
11	53038008	2	Washer DIN 6798-A 8		
12	52120008	2	Nut DIN 934 M8 8.8		
13	17610012	1	Filter Air Complete		14/02/2017
13	13810074	1	Filter Air Complete	15/02/2017	
14	51030006	3	Washer DIN 125-6		
15	14719013	1	Clamp,cable		
16	52102157	2	Bolt DIN 933 M6-20 8.8		
17	55307104	2	Bolt DIN 86 W3/16-10		
18	17719003	1	Bracket, Engine Control		
19	52120006	1	Nut DIN 934 M6 8.8		
20	14419023	1	Ball JOINT		
21	15119015	1	CABLE Holder Ball		

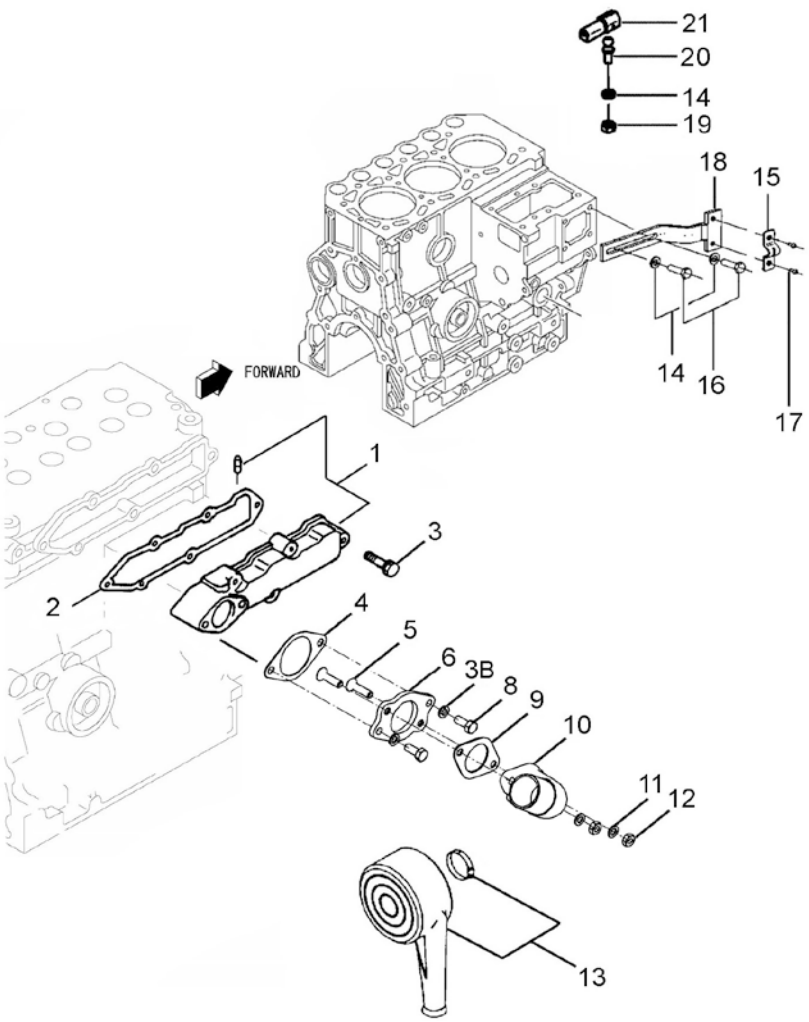

Cooling System

D_MID1_3_1			Water Pump		
FIG.	REF.	QTY	DESCR.	FROM	UPTO
1	17221020	1	Fresh Water Pump		
1AA	52102259	2	Bolt DIN 933 M8-30 8.8		
1AB	53033006	6	Washer GROWER DIN 127-6		
1B	14712032	1	Coupling,ball pipe oil		
1C	13221041	1	Gasket Water Pump		
1D	13221042	1	Plate Water Pump		
2	13221022	1	Gasket Water Pump		
3A	52101262	3	Bolt DIN 931 M8-45 8.8		
3B	53033008	7	Washer GROWER DIN 127-8		
4A	52101265	1	Bolt DIN 931 M8-60 8.8		
5	17221021	1	Pulley,Water Pump		
6	17221037	1	Assy Thermostat		
7	17221033	2	Gasket, Thermostat Case		
8A	13224062	3	Bolt		
9	17221025	1	Hose Assy		
9A	17221023	2	Clip,Hose [NP]		
9B	17221024	1	Elbow		
10A	52102155	4	Bolt DIN 933 M6-12 8.8		
11	17221031	1	Gasket,Thermostat		
12	17221027	1	Thermostat		
13	17211020	1	Fitting, Water Outlet		
14A	52101260	2	Bolt DIN 931 M8-35 8.8		
14B	53038008	2	Washer DIN 6798-A 8		
15	17121013	1	Gasket		
16	17121016	1	Plug, drain		
17	56000073	2	Copper Washer 16-23-1,5		
18	60900980	1	Temperature Sensor		
19	60900070	1	Thermo-Switch 97ºC		

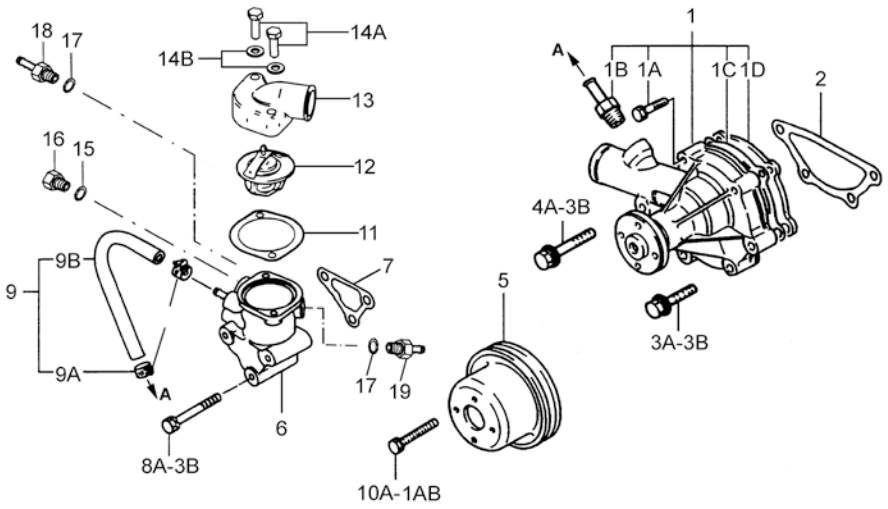

[NP] Not provided

Cooling System

D_MID1_3_2			Cooler Pipes		
FIG.	REF.	QTY	DESCR.	FROM	UPTO
1	17311000	1	Water Cooler Assy MINI-44 [NP]		
2	33811000	1	1/2" Pump Water, Set [NP]		24/01/2017
2	37611000	1	1/2" Pump Water, Set	25/01/2017	
3	13811027	2	Exhaust Manifold Outlet Bend		
4	54081020	4	Clamp DIN 3017 20-32/9 W4		12/09/2017
4	54081016	4	Clamp DIN 3017 16-27/9 W4	13/09/2017	
5	17011012	1	Elbow		
6	54082032	4	Clamp DIN 3017 32-50/12 W4		
7	17211006	1	Hose		
8	17211021	1	Elbow		
9	12117044	1	Spacer		
10	17211029	1	Bracket, Pipe		
11	53033006	1	Washer GROWER DIN 127-6		
12	52120006	1	Nut DIN 934 M6 8.8		
13	51071373	1	Clamp 31-40/15 W1		
14	51030006	1	Washer DIN 125-6		
15	52102157	1	Bolt DIN 933 M6-20 8.8		
16	52101265	1	Bolt DIN 931 M8-60 8.8		
17	53033008	1	Washer GROWER DIN 127-8		
18	17321035	1	Gasket		
19	17211015	8	MANIFOld MOUNTING Stud		
20	56000057	8	Washer 8-13-1,5		
21	55122008	8	Nut DIN 1587 M8		
22	17211034	1	Rubber WET Exhaust Inlet BEND		

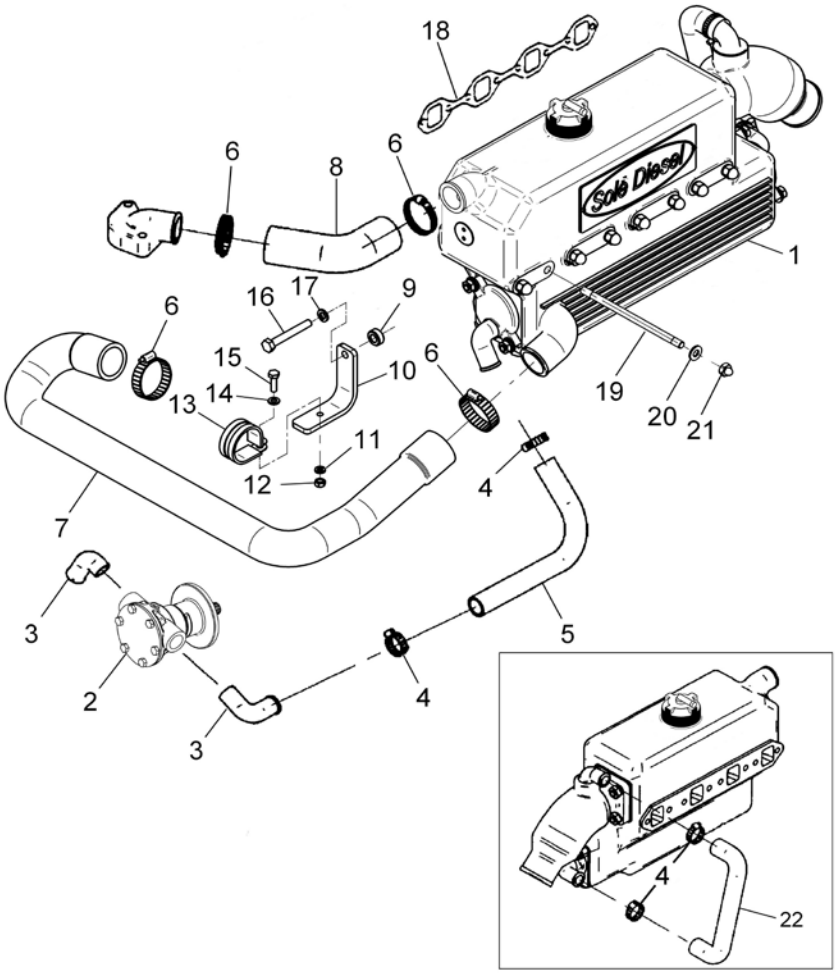

[NP] Not provided

Cooling System

17311000			Water Cooler Assy MINI-44		
FIG.	REF.	QTY	DESCR.	FROM	UPTO
1	17311001	1	Body, Water Cooler [NP]		
2	13811010	1	Cap		
3	12113092	1	Plug		
4	17011004	1	Tubular Bundle		
5	13811007	2	O-Ring D. 57X2,5		
6	13811002	1	Water Cooler Cover		
7	13211027	1	Water Inlet Bend		
8	13311006	8	Stud,cover		
9	51030008	4	Washer DIN 125-8		
10	53033008	4	Washer GROWER DIN 127-8		
11	54120008	4	Nut DIN 934 M8		
12	56000073	1	Copper Washer 16-23-1,5		
13	12111076	1	Plug		
14	54102306	1	Bolt DIN 933 M10-16 INOX.		
15	56000061	1	Washer 10-16-1,5		
16	13211035	1	Exhaust Manifold Outlet Bend		
17	17211042A	1	Cover,water cooler anode	19/01/2018	

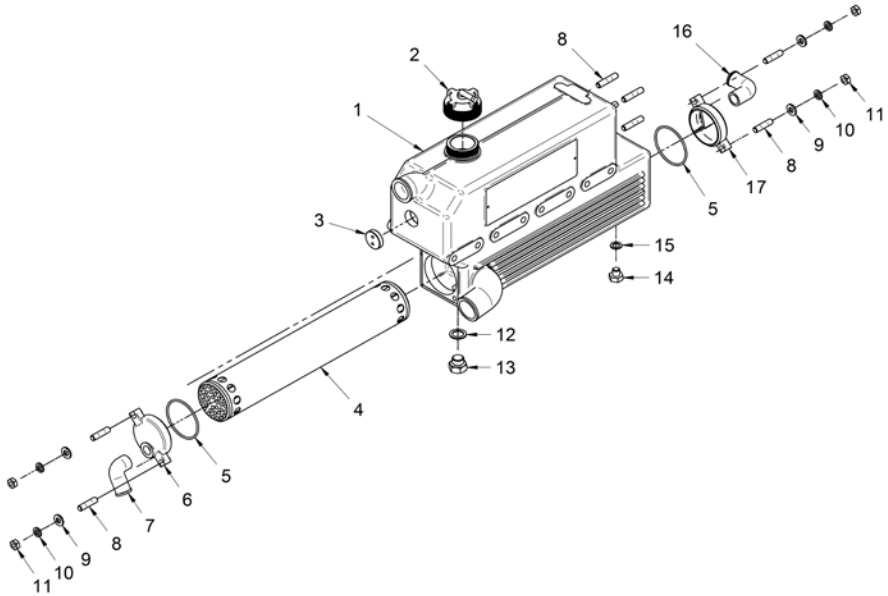

[NP] Not provided

Cooling System

17311001C			Body, Water Cooler And Cap		
FIG.	REF.	QTY	DESCR.	FROM	UPTO
1	17311001	1	Body, Water Cooler [NP]		
2	13811010	1	Cap		
3	12113092	1	Plug		
4	56000061	1	Washer 10-16-1,5		
5	54102306	1	Bolt DIN 933 M10-16 INOX.		
6	56000073	1	Copper Washer 16-23-1,5		
7	12111076	1	Plug		
8	17111060	1	Plate "SOLE Diesel" [NP]		
9	17111062	2	Bolt		

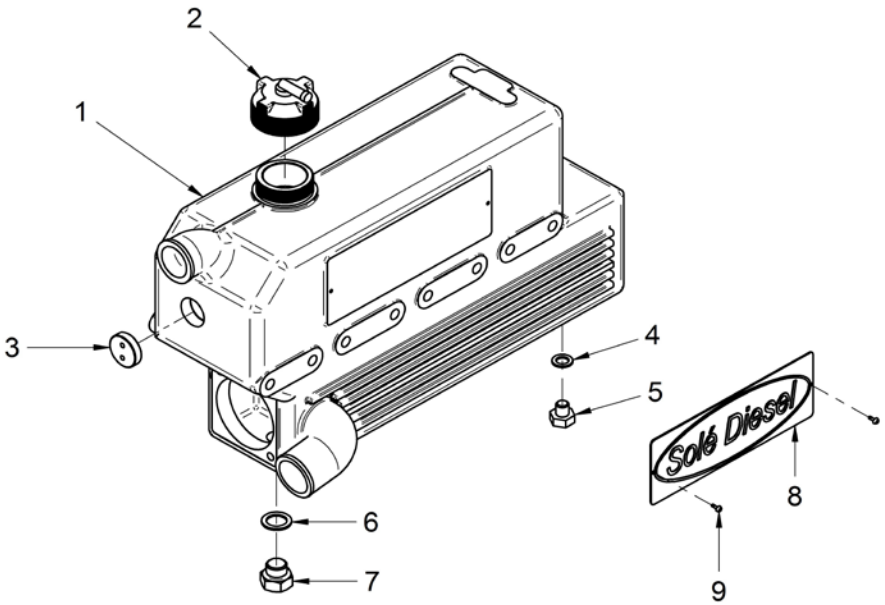

[NP] Not provided

Cooling System

D_MIC1_3_5			Wet Exhaust		
FIG.	REF.	QTY	DESCR.	FROM	UPTO
1	17013015	1	Elbow,wet exhaust		
2	15113043	1	Exhaust Elbow Gasket		
3	17211028	1	Water Bend		
4	13311006	4	Stud,cover		
5	53033008	4	Washer GROWER DIN 127-8		
6	52120008	4	Nut DIN 934 M8 8.8		

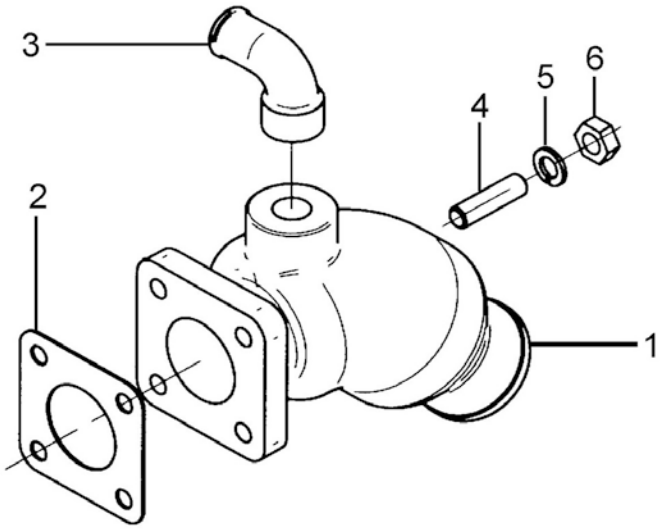

Cooling System

	33811000		1/2" Pump Water, Set		
FIG.	REF.	QTY	DESCR.	FROM	UPTO
1	54102104	6	Bolt DIN 933 M5-10 INOX.		
2	31211002	1	Cover Pump		
3	31211008	1	1/2" Impeller		
5	31211003	1	Gasket Cover		
6	55307105	1	Bolt DIN 86 W3/16-13		
7	31211005	1	Cam		
8	33411026	1	Wearplate		
9	33811010	1	Shaft,Water Pump		
10	33811015	1	Spacer		
11	53041032	1	CIRClip DIN 472 I-32		
12	33411014	2	Ball Bearing 6002-C3		
13	33411020	1	Seal		
14	33311013	1	O-Ring D. 15X2		
15	33411019	1	Seal		
17	33811001	1	Body,Water Pump		
18	33411017	1	Pin,Dowel		

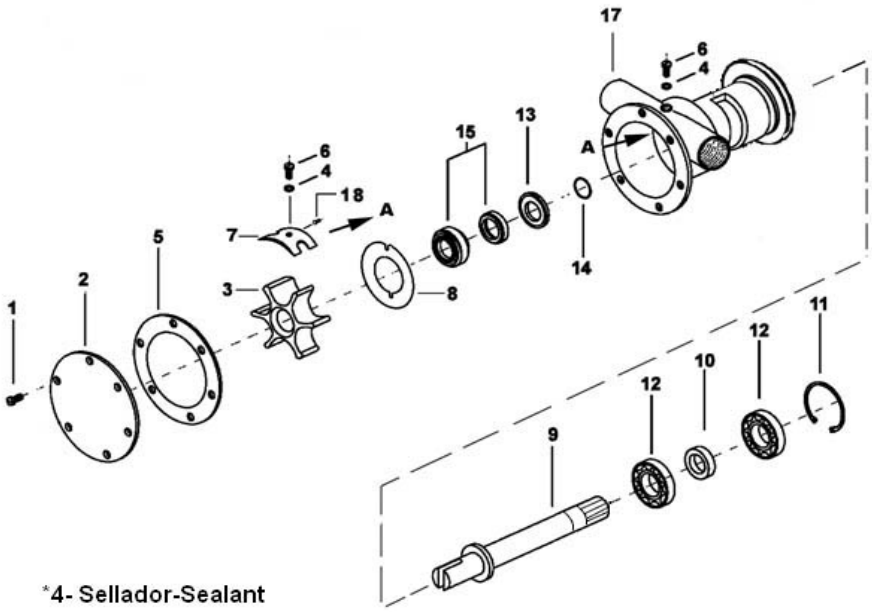

*4- Sellador-Sealant

Cooling System

	37611000		1/2" Pump Water, Set		
FIG.	**REF.**	**QTY**	**DESCR.**	**FROM**	**UPTO**
1	54102154	3	Bolt DIN 933 M6-10 INOX		
2	37611002	1	Cover Pump		
3	37611003	1	O-Ring D. 57x1,5		
4	31211008	1	1/2" Impeller		
5	37611026	1	Plate, Friction		
6	33811010	1	Shaft,Water Pump		
7	33411019	1	Seal		
8	33311013	1	O-Ring D. 15X2		
9	37611001	1	Body, Water Pump 1/2"		
10	33411020	1	Seal		
11	33411014	2	Ball Bearing 6002-C3		
12	33811015	1	Spacer		
13	53041032	1	CIRClip DIN 472 I-32		

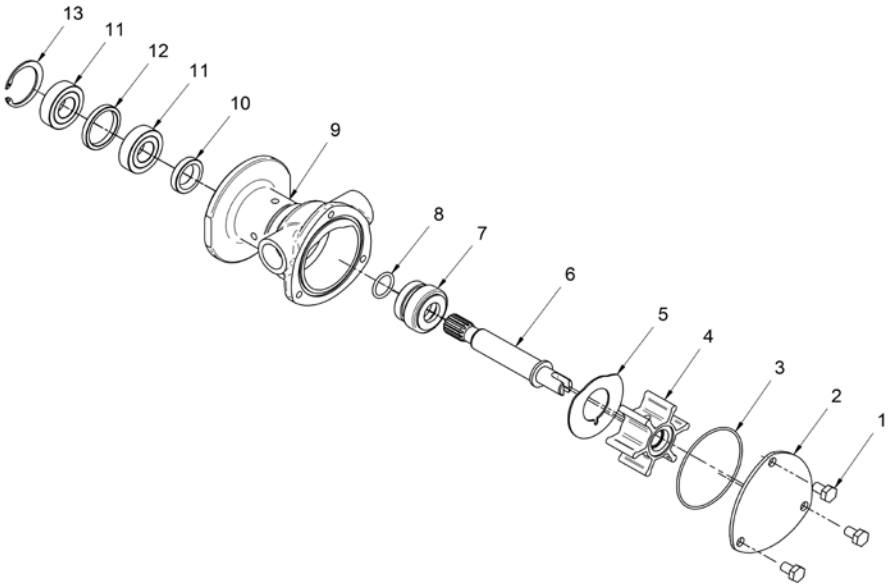

Fuel System

D_MID1_4_1			Fuel Pipe		
FIG.	REF.	QTY	DESCR.	FROM	UPTO
1	13824013	4	Injector Washer		
2	13824025	4	Injector Gasket		
3	13824024	4	Nut		
4	17224015.4	1	Pipe Injection N.1		
5	17224016.4	1	Pipe Injection N.2		
6	17224019.4	1	Pipe Injection N.3		
7	17324020.1	1	Pipe Injection N.4		
8	13124018	3	Clamp (A)		
9	13124017	3	Clamp (B)		
10	13124019	3	Bolt		
11	17324002	1	Assy,Fuel Return		
12	13224008	0	Shim Adjusting T=0,7mm [VAR]		
13	13224009	0	Shim Adjusting T=0,8mm [VAR]		
14	13224010	0	Shim Adjusting T=0,9mm [VAR]		
15	13224011	0	Shim Adjusting T=1,0mm [VAR]		
16	13224003	0	Shim Adjusting T=0,2mm [VAR]		
17	52102257	6	Bolt DIN 933 M8-20 8.8		

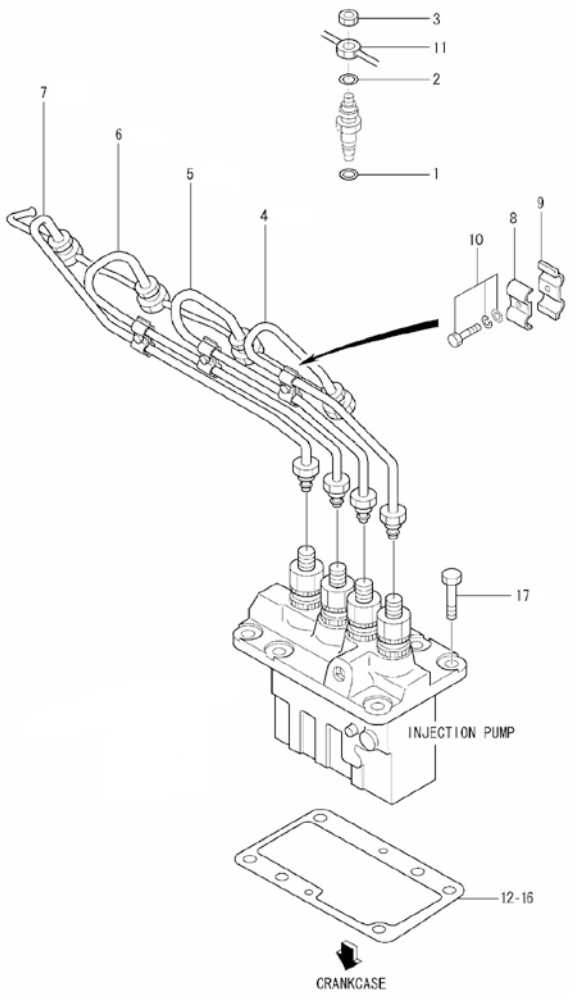

[VAR] Variable according to repair

D_MID1_4_2			Injection Noozle		
FIG.	REF.	QTY	DESCR.	FROM	UPTO
1	13826001	4	Nozzle & Holder A		
1A	13826002	4	Body Assy		
1BA	13826010	0	Washer 1,25 [VAR]		
1BB	13826011	0	Washer 1,30 [VAR]		
1BC	13826012	0	Washer 1,35 [VAR]		
1BD	13826013	0	Washer 1,40 [VAR]		
1BE	13826014	0	Washer 1,45 [VAR]		
1BF	13826015	0	Washer 1,50 [VAR]		
1BG	13826016	0	Washer 1,55 [VAR]		
1BH	13826017	0	Washer 1,60 [VAR]		
1BI	13826019	0	Washer 1,65 [VAR]		
1BJ	13826020	0	Washer 1,70 [VAR]		
1C	17226004	4	Spring, Pressure		
1D	13826003	4	Pin Pressure		
1E	13826007	4	PIECE DISTANCE		
1F	13826018	4	Nozzle Assy		
1G	17226006	4	Nut, Nozzle RETAINING		

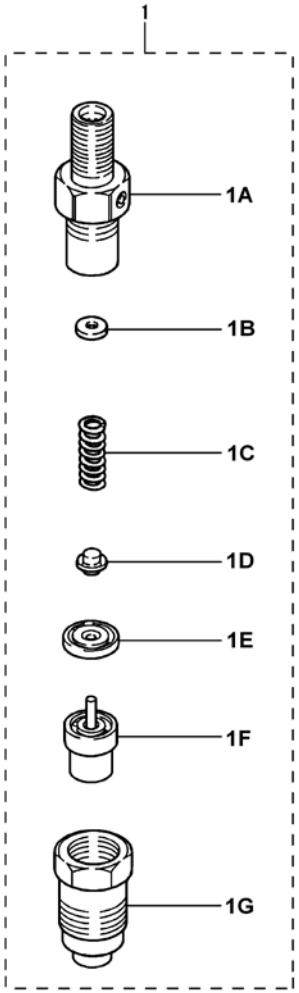

[VAR] Variable according to repair

Fuel System

D_MID1_4_3			Fuel Injection Pump		
FIG.	REF.	QTY	DESCR.	FROM	UPTO
1	17325005G	1	Housing SUB Assy		
2	17325004.1	4	Holder,DELIVERY		
3	17325002.1	4	Spring,DELIVERY		
4	13125007	4	Gasket DELIVERY V		
5	17225008G	4	Valve SUB-Assy (Generator)		
6	17325009.1	4	Element SUB Assy		
7	13125010	4	SLEEVE		
8	13125011	4	Seat Spring Upper		
9	13125012	4	Spring Plunger		
0	17325001.1	1	Pump Assy,Fuel Injection		
10	13125021	4	Tappet SUB Assy		
11	17025006	1	RACK Control		
12	13125013	3	Seat Spring LOWER		
13	13125033	3	O-Ring D. 15X2,5		
14	13125022	3	Pin Tappet Guide		
15	13125023	1	Plate		
16	13125030	3	Plate Assy Pressure		
17	17225028	3	Bolt, With Washer		
18	17225026.3	1	Screw Air BLEEDER		
19	17325027.1	1	Screw,HOLLOW		
20	17225025.3	1	Washer DRAIN Screw		
21A	13125014	0	Shim T=0,60 [VAR]		
21B	13125015	0	Shim T=0,2 [VAR]		
21C	13125016	0	Shim Adjusting T=0,3 [VAR]		
21D	13125017	0	Shim T=0,4 [VAR]		
21E	13125018	0	Shim T=0,5 [VAR]		
21F	13125019	0	Shim Adjusting T=0,25 [VAR]		
21G	13125020	0	Shim Adjusting T=0,35 [VAR]		
21H	13125021	0	Tappet SUB Assy [VAR]		
21I	13125022	0	Pin Tappet Guide [VAR]		
21J	13125023	0	Plate [VAR]		
22	(*)	1	Not available [NP]		
23	13125003	1	RIVET		
24	13224001	2	Washer		
25	17324017.4	1	COLOR, Union		

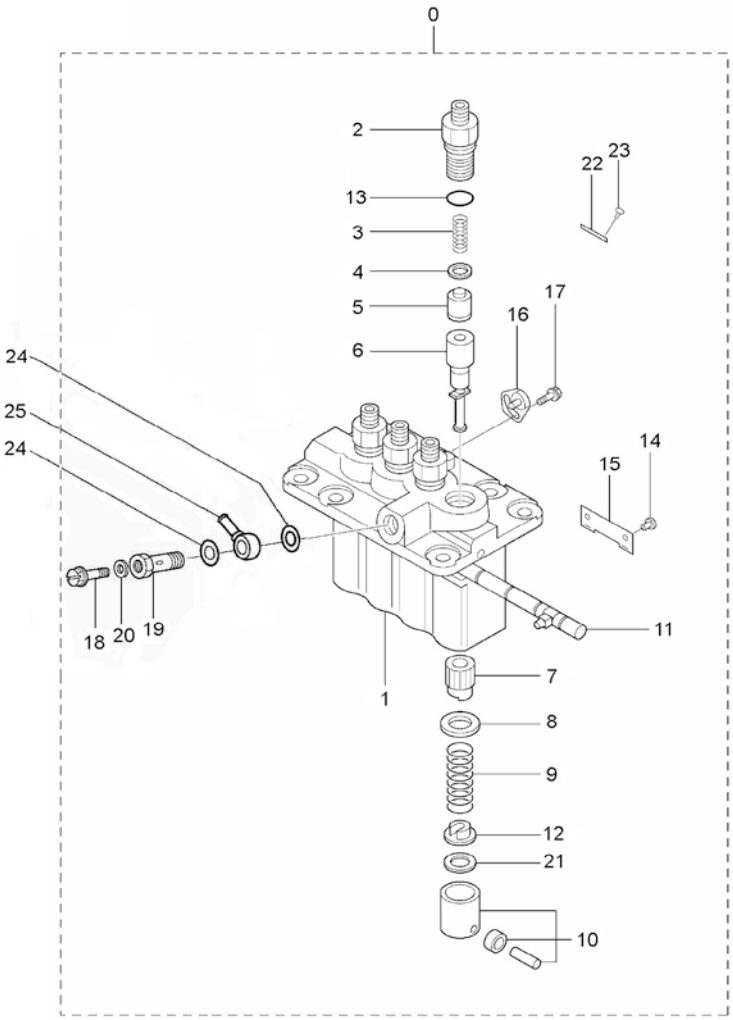

[NP] Not provided

[VAR] Variable according to repair

	D_MID1_4_4		Governor Parts		
FIG.	REF.	QTY	DESCR.	FROM	UPTO
1	17323000.4	1	Case Assy, Governor [NP]		
1A	17323009.4	1	Pin, Spring		
1B	17323046.4	1	O-Ring		
1C	17323010.4	2	Pin GROOVED		
1D	17323032.4	2	Nut		
1E	17223030	1	Nut		
1F	53033008	1	Washer GROWER DIN 127-8		
1G	17223035	1	Nut		
1H	13823034	1	RACK Set Screw (new)		
1I	17323017.4	1	Bolt		
1J	17323048.4	2	Lever TIE-ROD		
1K	17323049	1	Spring TIE-ROD		
1L	17323036.4	1	Cover, Governor		
1M	17223006	1	Shaft, GOverNOR		
1N	17323003.4	1	Lever, Governor		
1O	17223044	1	Spring, GOverNOR		
1P	17223028	1	Spring		
1Q	17323025.4	1	Bolt Low Idle Set [NP]		
1R	(*)	1	Not available [NP]		
1RA	17323029.4	1	Lever Assy		
1RB	13220034	2	Roller Bearings		
1S	17223019.4	1	Case, Governor		
1T	17223007	1	Lever, Governor		
1U	17223008.4	1	Lever, SPEED		
1V	17323047.4	1	Shim, Governor Shaft		
2	17223033G	1	Gasket, Governor Case [NP]		
3	17223050	1	Shaft, SLIDING SLEEVE		
4	17223031	1	SLEEVE, SLIDING		
5	17223001	1	WEIGHT Assy, GOverNOR		
6	17220034.4	3	Bolt		
7	17223052.4	1	Bolt, Governor Case		
8	17223043.4	1	Cover TIE-ROD		
9	13223014	1	Gasket Cover		
10A	52102256	4	Bolt DIN 933 M8-15 8.8		
10B	53033006	4	Washer GROWER DIN 127-6		

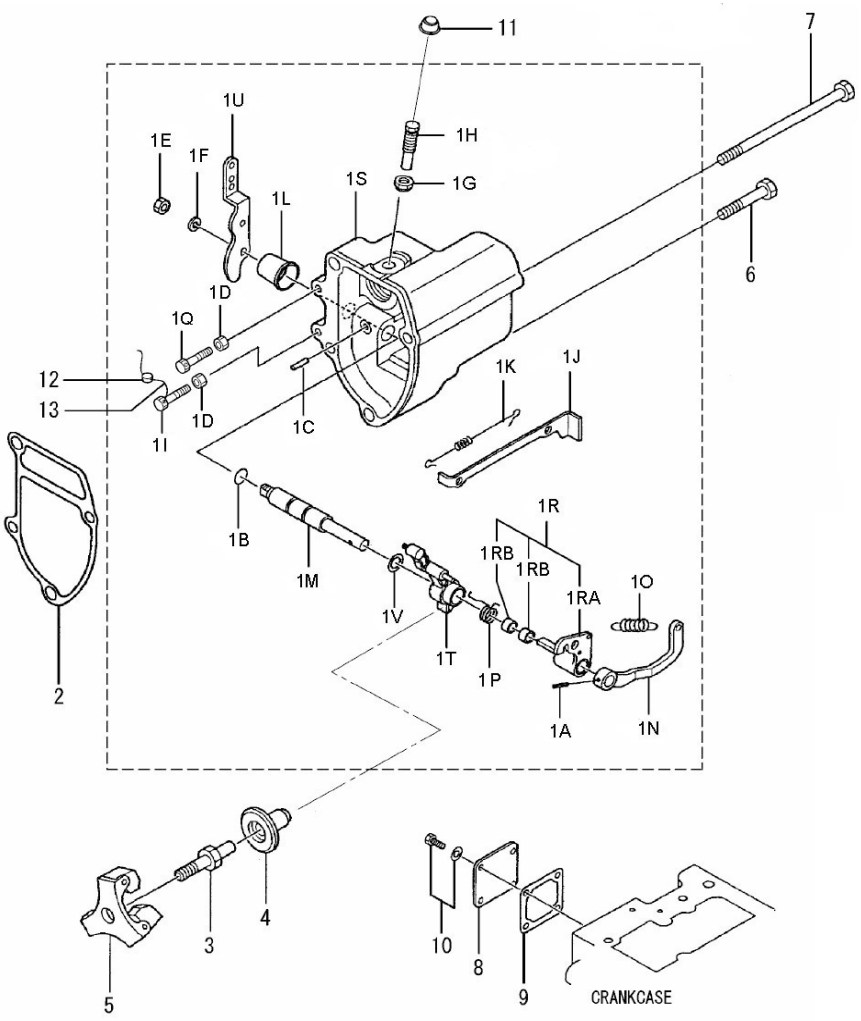

[NP] Not provided

D_MID1_4_4			Governor Parts		
FIG.	REF.	QTY	DESCR.	FROM	UPTO
11	13823042	1	Cap TORQUE Set SE		
12	17623020.4	1	Metal,Fuel		
13	17323019.4	1	Wire		

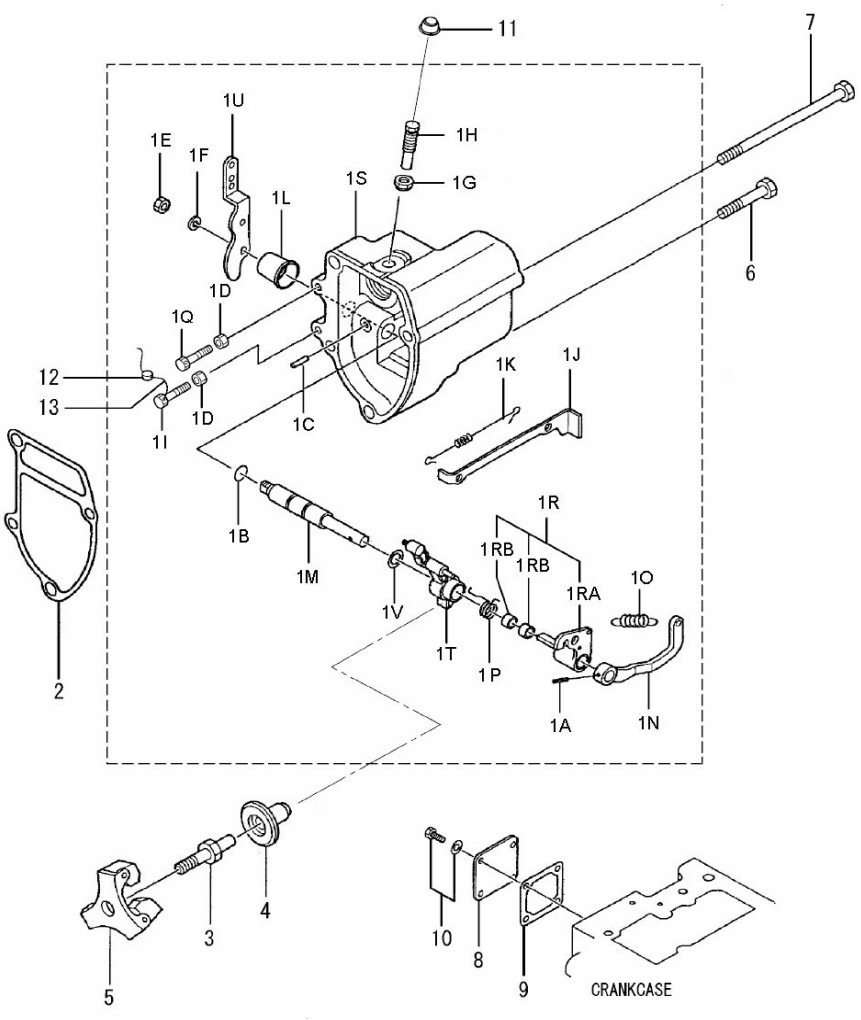

Fuel System

D_MID1_4_5			Fuel Supply Parts		
FIG.	REF.	QTY	DESCR.	FROM	UPTO
1	17314017.4	1	Pipe, Filter TO INJ. Pump		
2	51086016	1	ONE EAR Clamp With INTERIOR Ring		
3	51086011	4	ONE EAR Clamp With Interior Ring		
4	17314027	1	0,48 M. Hose		
5	17614026	1	0,04 M. Hose		
6	17614028	1	Bypass "T"		
7	57000369	4	Washer 14,2-20-1,5		
8	12814051	2	Screw,eye		
9	13114022	1	Gas-Oil Filter Element		
10	52102257	2	Bolt DIN 933 M8-20 8.8		
11	53038008	2	Washer DIN 6798-A 8		
12	17214001	1	Bracket, Gas-Oil Filter		
13	13114020	1	Cover,filter		
14	52030008	2	Washer DIN 125		
15	52102258	4	Bolt DIN 933 M8-25 8.8		

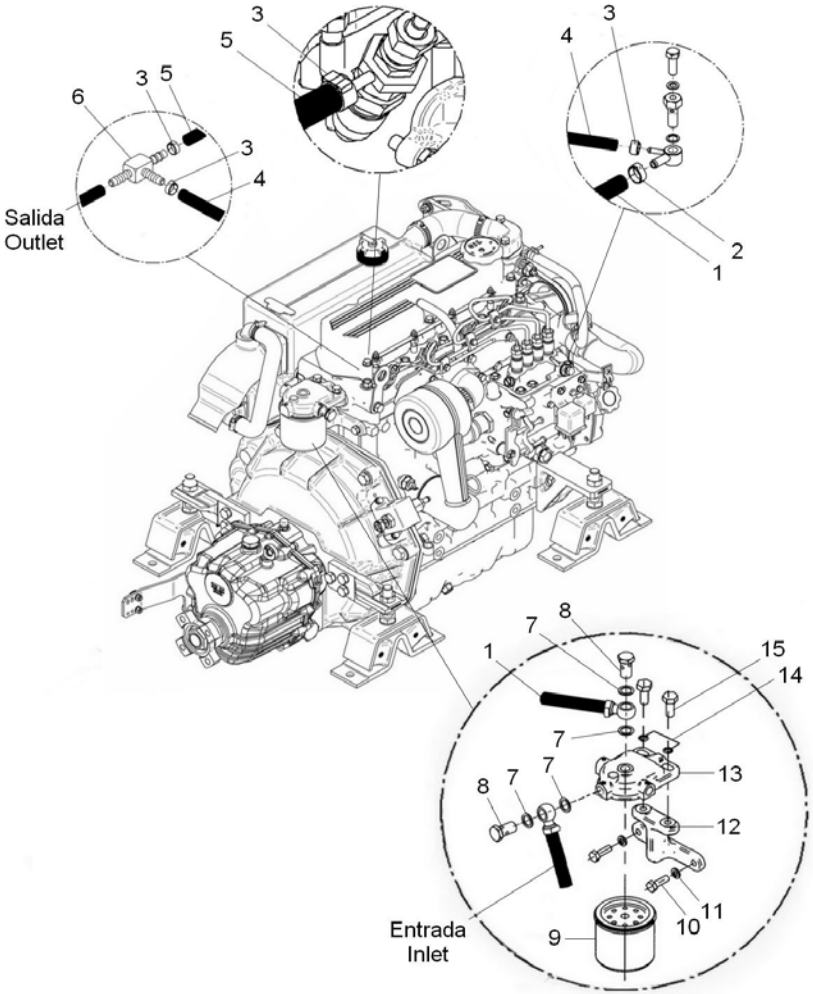

Electrical System 12V

	17217055		Kit Alternator 14V.95A.		
FIG.	**REF.**	**QTY**	**DESCR.**	**FROM**	**UPTO**
1	17117025	1	Alt. 14V/95A Mahle	13/04/2016	
2	17227007.4	1	Plate		
3	13817012.7	1	Pulley		
4	13817017	1	Spacer 17X28X5,5	09/09/2015	
5	13817016	1	Spacer 17X28X4		
6	51031008	1	Washer DIN 9021 8		
7	52102259	1	Bolt DIN 933 M8-30 8.8		30/07/2017
7	52102258	1	Bolt DIN 933 M8-25 8.8	31/07/2017	
8	52101325	1	Bolt DIN 931 M10-120 8.8		
9	53038010	1	Washer DIN 6798-A 10		
10	17417025	1	Spacer 13.5x10.2x11	09/09/2015	
11	17217006	1	Spacer 10,5X25X32		
12	51030008	1	Washer DIN 125-8		
13	53033008	1	Washer GROWER DIN 127-8		30/07/2017
14	52120008	2	Nut DIN 934 M8 8.8		
15	TFM.6.3.T.5.I	1	Straight Receptacle 6.3 Faston		
16	51030005	1	Washer DIN 125-5		
17	52120005	1	Nut DIN 934 M5 8.8		
18	TR.10.8	1	Ring Terminal 10 Sec.		
19	17021028	1	Belt Type SPZX 987		
20	53038008	1	Washer DIN 6798-A 8	31/07/2017	

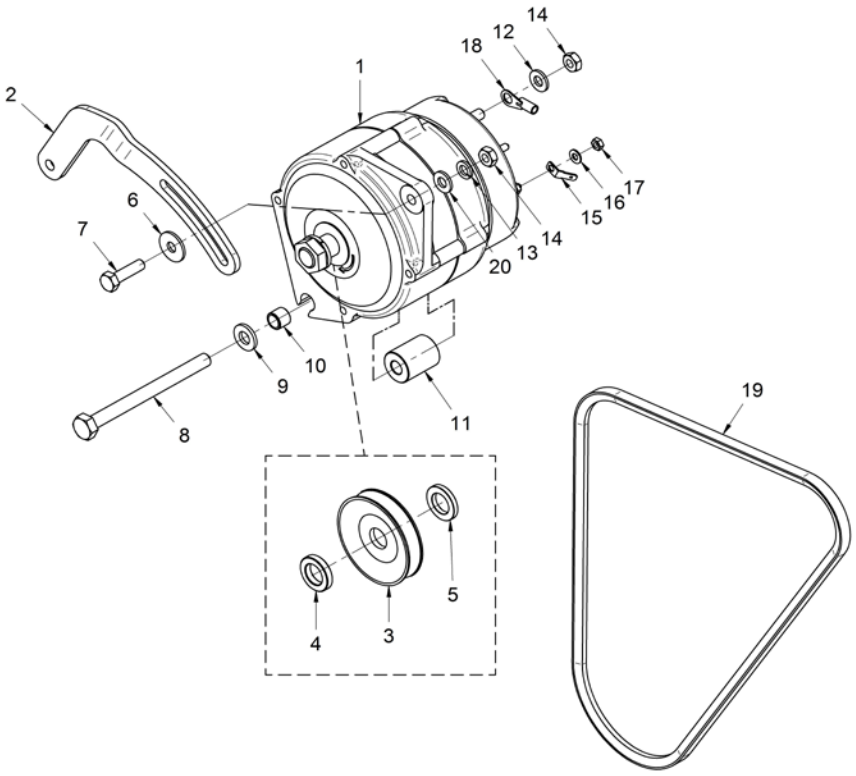

D_MIC1_5_3			Starter Assy		
FIG.	REF.	QTY	DESCR.	FROM	UPTO
1	17227001	1	Starter Assy 12 V		
2	52202308	2	Bolt DIN 933 M10-1,25-25 8.8		
3	53033010	2	Washer GROWER DIN 127-10		

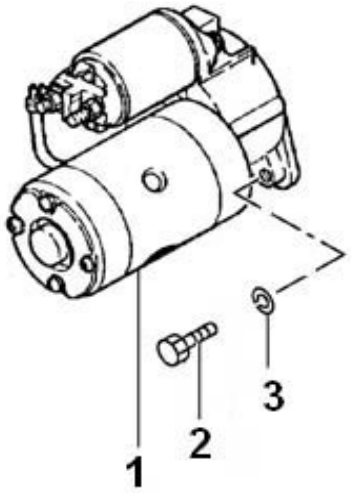

Electrical System 12V

D_MID1_5_5			Electrical Wiring		
FIG.	REF.	QTY	DESCR.	FROM	UPTO
1	60972125.2	1	Panel TE2 MINI-33/44/55		
2	60938005	1	Panel N.2		
3	60900121	1	FuseHolder, panel		
4	60900118	1	Fuse 10 A.		
5	60900036	1	Key,Starter Switch		
6	60900038	1	Cover,KEY		
7	60900037	1	Key-Locking		
8	60972910	1	Tachometer MINI-33/44		
9	60900301.2	1	V3 C.I. 12V Prop. Engine Board.Varnished [NP]	23/06/2015	
10	60900119	1	Fuse 0.5A		
12	60900929	2	Bulb 12V		
13	60900915R	1	Water Gauge 12 V		
14	60938006	1	Gasket Panel		
15	13827005	1	Glow Relay		
16	13817005	1	Relay 6V		
17	51030005	1	Washer DIN 125-5		
18	52102104	1	Bolt DIN 933 M5-10 8.8		
19	52102154	2	Bolt DIN 933 M6-10 8.8		
20	51030006	2	Washer DIN 125-6		
21	60938210.1	1	Engine Wiring Ext. 3 M. SUPERSEAL		
22	60972200R.3	1	Wiring,Electrical MINI-33/44/55 3 V.		
23	17327018.4	1	Plate, Connection		
24	17127017	4	Plug, glow		
25	13424025	1	Solenoid		
26A	17225029.4	1	Nut		
26B	17023030	1	Cap GUM		
27	60934040	1	Wirine		
28	15217010	1	Bracket,wirings		
29	53033012	1	Washer GROWER DIN 127-12		
30	52202361	1	Bolt DIN 933 M12-1,25-40 8.8		

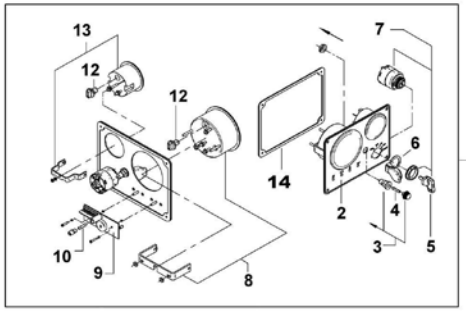

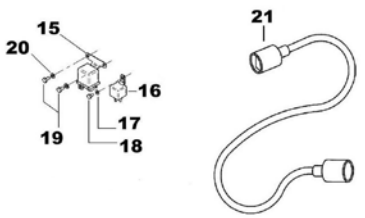

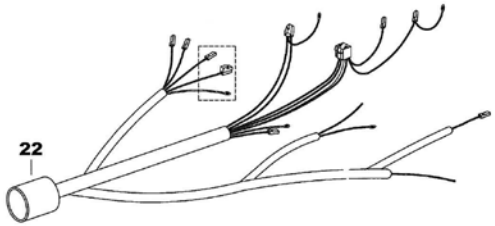

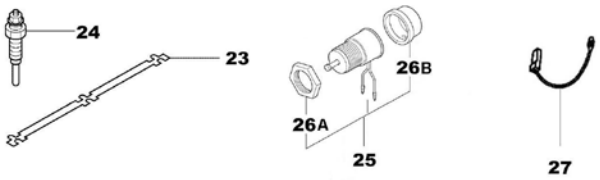

[NP] Not provided

Electrical System 12V

D_MIC1_5_6			Deluxe Instrument Panel		
FIG.	REF.	QTY	DESCR.	FROM	UPTO
1	60972127.2	1	SVT 30 MINI-33/44/55 Panel (Repl.) [NP]		
3	60900929	4	Bulb 12V		
4	60900925R	1	VOLTMETER 12 V		
5	60972910	1	Tachometer MINI-33/44		
6	60900920R	1	Oil Pressure Gauge 12 V		
7	54108003	1	Bolt DIN 84 M3-8 INOX.		
8	60900119	1	Fuse 0.5A		
9	60900301.2	1	V3 C.I. 12V Prop. Engine Board.Varnished [NP	23/06/2015	
10	60900915R	1	Water Gauge 12 V		
11	60990006	1	Gasket Panel		
12	60900037	1	Key-Locking		
13	60900038	1	Cover,KEY		
14	60990005	1	Panel N.3		
15	60900121	1	FuseHolder, panel		
16	60900118	1	Fuse 10 A.		
17	60900036	1	Key,Starter Switch		

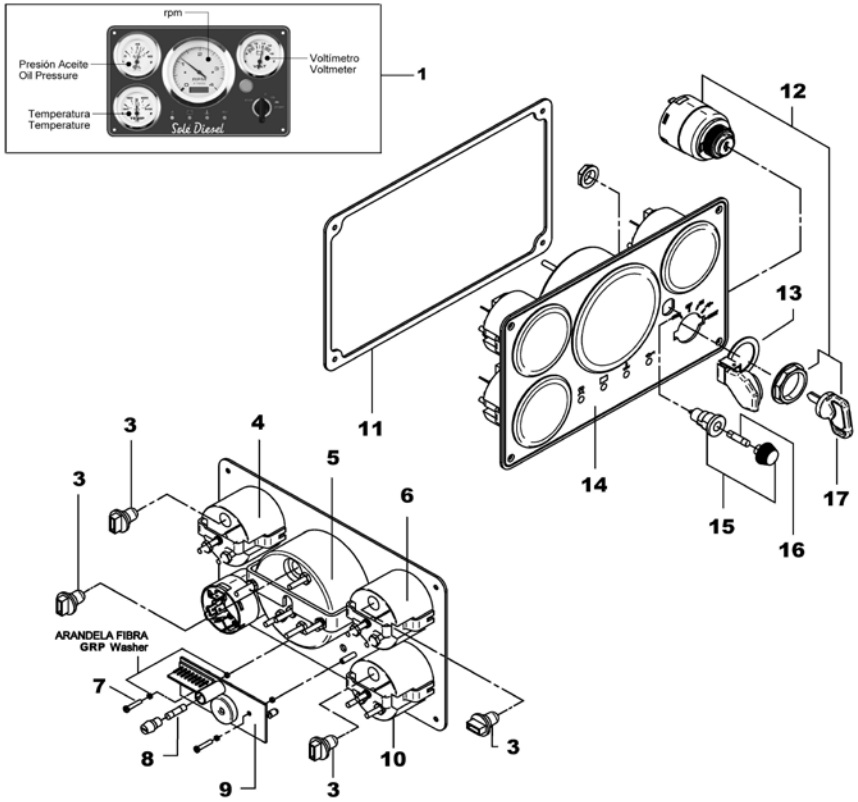

[NP] Not provided

Electrical System 12V

D_60972130			SVT 20 MINI-33/44/55 Panel		
FIG.	REF.	QTY	DESCR.	FROM	UPTO
1	60938005.1	1	Panel N.2		
2	60900301.2	1	V3 C.I. 12V Prop. Engine Board.Varnished [NP]		
3	54108003	2	Bolt DIN 84 M3-8 INOX.		
4	60900910.1	1	MTG Bracket 3" LG GA AMEGA		
5	60900910.2	3	Nut 8-32 W/CapTIVE STAR Washer		
6	60900037.2	1	Connector		
7	60900915.2	1	MTG Bracket		
8	60900037	1	Key-Locking		
9	60900931	2	SOCKET,WEDGE BASE		
10	60900929	2	Bulb 12V		
11	60900937	1	Water Gauge 12 V		
12	60972912	1	Tachometer MINI-33/44 SVT		
13	60900096	1	Cover Plate for Motor Propeller		
14	60938006.1	1	Gasket Panel		
NS	60910012	1	System Back Panel SVT/MVT 20 12V [NS]	07/12/2016	
NS	60900091	1	MICRO Relay 12V 12-20 [NS]		

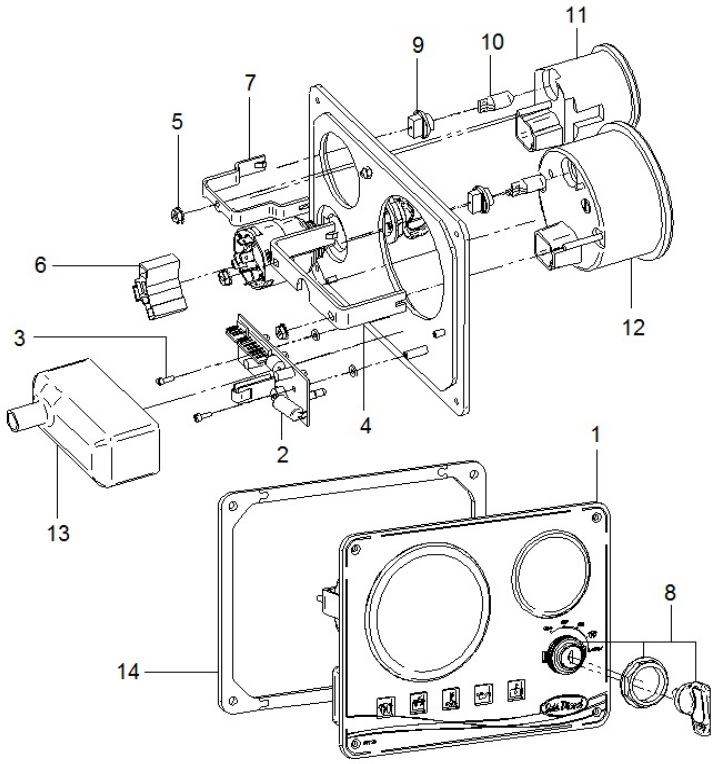

[NP] Not provided
[NS] Not shown

Electrical System 12V

D_60972132			SVT 30 MINI-33/44/55 Panel		
FIG.	REF.	QTY	DESCR.	FROM	UPTO
1	54108003	2	Bolt DIN 84 M3-8 INOX.		
2	60900037	1	Key-Locking		
3	60900037.2	1	Connector		
4	60900910.2	5	Nut 8-32 W/CapTIVE STAR Washer		
5	60900931	4	SOCKET,WEDGE BASE		
6	60900929	4	Bulb 12V		
7	60990005.1	1	Panel N.3		
8	60990006.1	1	Gasket Panel		
9	60900096	1	Cover Plate for Motor Propeller		
10	60900301.2	1	V3 C.I. 12V Prop. Engine Board.Varnished [NP]		
11	60900910.1	1	MTG Bracket 3" LG GA AMEGA		
12	60900915.2	3	MTG Bracket		
13	60900941	1	VOLTMETER 12V		
14	60972912	1	Tachometer MINI-33/44 SVT		
15	60900937	1	Water Gauge 12 V		
16	60900939	1	Oil Pressure Gauge 12V		
NS	60910014	1	System Back Panel SVT/MVT 30 12V [NS]	07/12/2016	
NS	60900091	1	MICRO Relay 12V 12-20 [NS]		

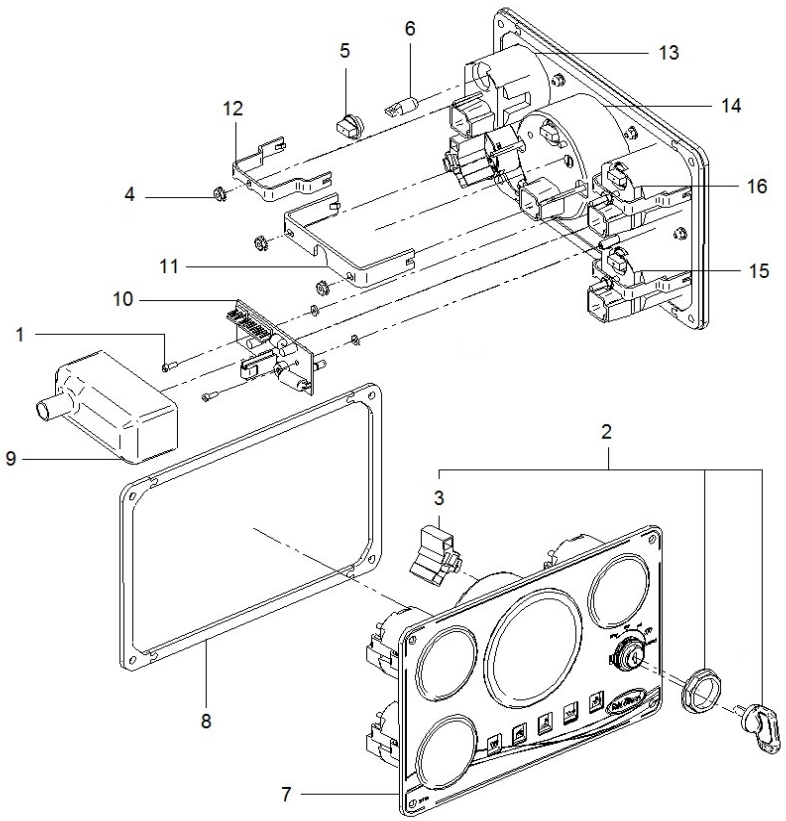

[NP] Not provided
[NS] Not shown

Electrical System 24V

	17217207		Kit Alternator 28V/55A		
FIG.	**REF.**	**QTY**	**DESCR.**	**FROM**	**UPTO**
1	17417024	1	Alternator 28V/55A		
2	17217014	1	Plate		
3	13817012.7	1	Pulley		
4	13817017	1	Spacer 17X28X5,5	09/09/2015	
5	13817016	2	Spacer 17X28X4		
6	51031008	1	Washer DIN 9021 8		
7	52102260	1	Bolt DIN 933 M8-35 8.8		
8	52101325	1	Bolt DIN 931 M10-120 8.8		
9	53038010	1	Washer DIN 6798-A 10		
10	17217020	1	Spacer 10,25X25X36		
11	51030008	1	Washer DIN 125-8		
12	53033008	1	Washer GROWER DIN 127-8		
13	52120008	1	Nut DIN 934 M8 8.8		
14	13421028	1	Belt Type SPZX 962		
15	51030010	1	Washer DIN 125-10		
16	53033010	1	Washer GROWER DIN 127-10		
17	52120010	1	Nut DIN 934 M10 8.8		
18	17117002	1	Spacer 8,5X20X5		

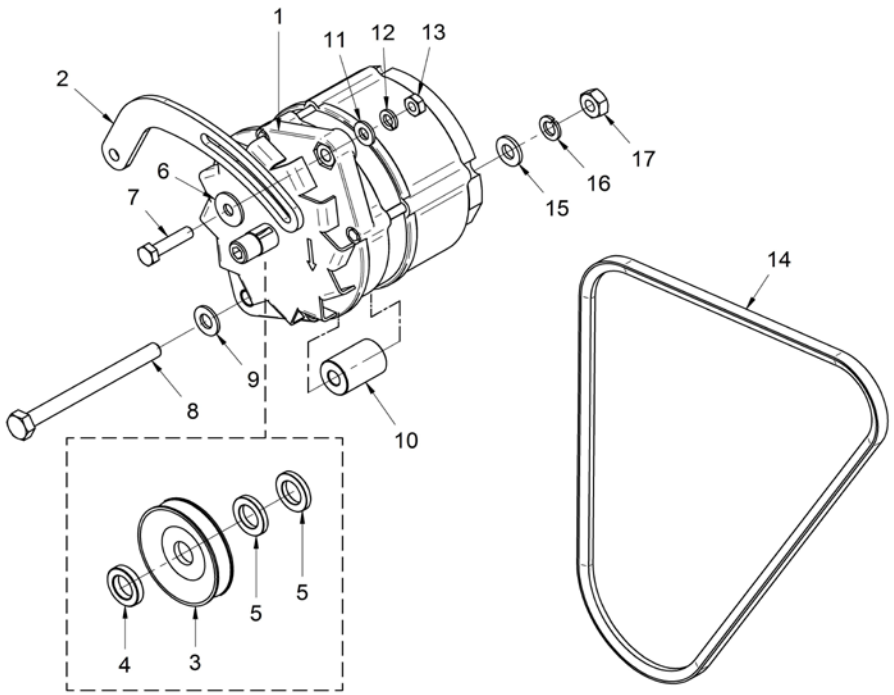

	D_MID1_7_2		Starter Assy. 24V		
FIG.	REF.	QTY	DESCR.	FROM	UPTO
1	17327001.2	1	Starter Assy 24V		
2	52202308	2	Bolt DIN 933 M10-1,25-25 8.8		
3	53033010	2	Washer GROWER DIN 127-10		

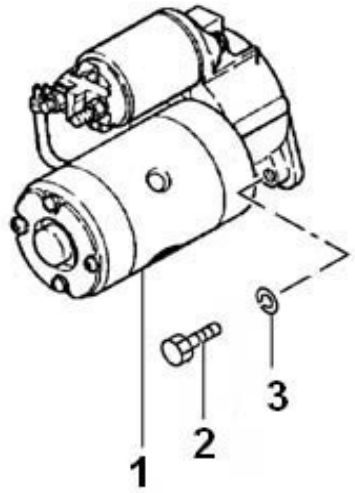

Electrical System 24V

D_MID1_7_3			24V Electrical Wiring		
FIG.	REF.	QTY	DESCR.	FROM	UPTO
1	60973125.2	1	SVT 20 MINI-33/44/55 24V Panel (Repl.)		
2	60938005	1	Panel N.2		
3	60900121	1	FuseHolder, panel		
4	60900118	1	Fuse 10 A.		
5	60900036	1	Key,Starter Switch		
6	60900038	1	Cover,KEY		
7	60900037	1	Key-Locking		
8	60972911	1	TACHOMETER mini-33/44/55 24V.		
9	60900302.1	1	Integrated Circuit Plate 24V v2 [NP]		
10	60900119	1	Fuse 0.5A		
12	60900930	2	Bulb GE400 WEDGE BASE 24V		
13	60900916R	1	Water Gauge 24 V		
14	60938006	1	Gasket Panel		
15	17417005	1	Relay 24V 24-100		
16	17417005.1	1	Relay 24V 24-22A		
17	51030005	1	Washer DIN 125-5		
18	52102104	1	Bolt DIN 933 M5-10 8.8		
19	52102155	1	Bolt DIN 933 M6-12 8.8		
20	51030006	1	Washer DIN 125-6		
21	60938210.1	1	Engine Wiring Ext. 3 M. SUPERSEAL		
22	60972200R.3	1	Wiring,Electrical MINI-33/44/55 3 V.		
23	17327018.4	1	Plate, Connection		
24	17227017.2	4	Glow Plug 24V		
25	13824025.2	1	Stop SOLENOID 24V-ETS		
26A	17225029.4	1	Nut		
26B	17023030	1	Cap GUM		
27	60934040	1	Wirine		
28	15217010	1	Bracket,wirings		
29	53033012	1	Washer GROWER DIN 127-12		
30	52202361	1	Bolt DIN 933 M12-1,25-40 8.8		
31	17617006	1	Spacer 6,5X12X5		
NS	19014070	1	Pump 24V. [NS]		
NS	60900933	1	VOLTAGE REDUCER 7W [NS]		
NS	60900932	1	VOLTAGE REDUCER 5W 100 ohm TE [NS]		

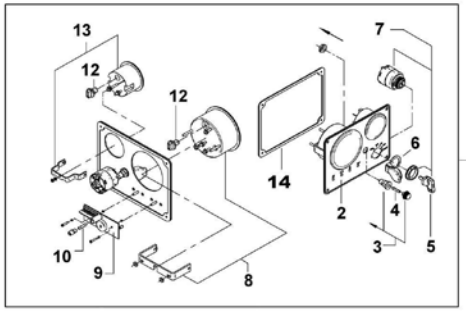

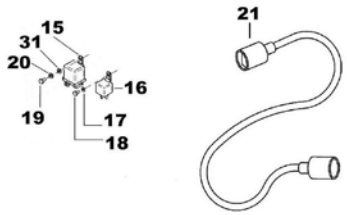

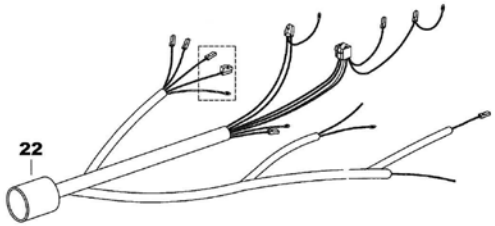

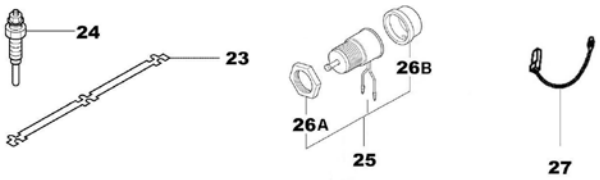

[NP] Not provided
[NS] Not shown

Electrical System 24V

	D_MID1_7_4		TE4 Panel		
FIG.	REF.	QTY	DESCR.	FROM	UPTO
1	60973126.2	1	SVT 40 MINI-33/44/55 24V Panel (Repl.)		
2	60972911	1	TACHOMETER mini-33/44/55 24V.		
3	60900930	1	Bulb GE400 WEDGE BASE 24V		
4	60900302.1	1	Integrated Circuit Plate 24V v2 [NP]		
5	60900119	1	Fuse 0.5A		
6	54108003	2	Bolt DIN 84 M3-8 INOX.		
7	60938006	1	Gasket Panel		
8	60938007	1	Panel N.4		
9	60900121	1	FuseHolder, panel		
10	60900118	1	Fuse 10 A.		
11	60900037	1	Key-Locking		
12	60900038	1	Cover,KEY		
NS	60900932	1	VOLTAGE REDUCER 5W 100 ohm TE [NS]		

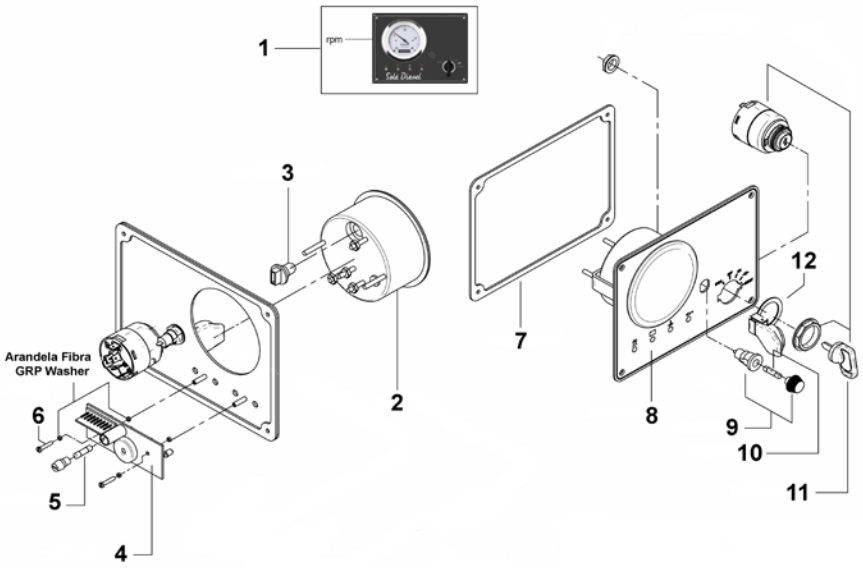

[NP] Not provided
[NS] Not shown

Maintenance Kit

D_17320101.4			Gasket Kit		
FIG.	REF.	QTY	DESCR.	FROM	UPTO
1	17321010	1	Rocker Cover Gasket		
2	17321035	1	Gasket		
3	17321004	1	Gasket, Cylinder Head		
4	17321032.1	1	Gasket,Inlet Cover		
5	17321034.4	1	Pipe Inlet Gasket		
6	13811007	2	O-Ring D. 57X2,5		
7	15113043	1	Exhaust Elbow Gasket		
8	17011007	1	O-Ring D. 57X3		
9	31211003	1	Gasket Cover		
10	17221034	1	Gasket, Inlet Pipe		
11	17223033G	1	Gasket, Governor Case [NP]		
12	13223014	1	Gasket Cover		
13	13221022	1	Gasket Water Pump		
14	13221042	1	Plate Water Pump		
15	17224041	1	Packing, Body		
16	17220002	4	Seal, Side		
17	17424063	1	Gasket		
18	17220016	1	Gasket, Oil Seal Case		
19	17221031	1	Gasket,Thermostat		
20	17221033	1	Gasket, Thermostat Case		
22	13824025	4	Injector Gasket		
23	13824013	4	Injector Washer		
24	13222054	8	Seal Valve Stem		
25	13120047	3	Gasket Water Pump		
26	17220040	1	Gasket, Gear Case		
27	17220038	1	Gasket, Housing		
28	17024001	1	Gasket		
29	17220018	1	Gasket, Front Plate		

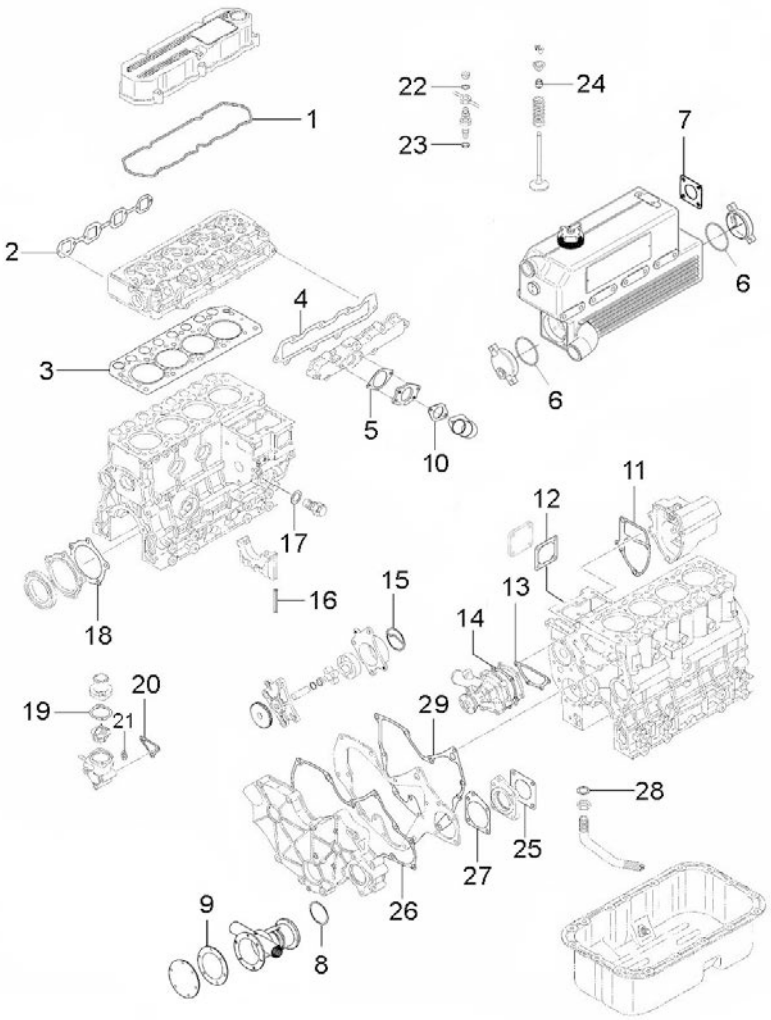

[NP] Not provided

17211100.4			Pipe Rubber Set, Water Line		
FIG.	REF.	QTY	DESCR.	FROM	UPTO
1	17011012	1	Elbow		
2	17211006	1	Hose		
3	17211021	1	Elbow		
4	17211034	1	Rubber WET Exhaust Inlet BEND		

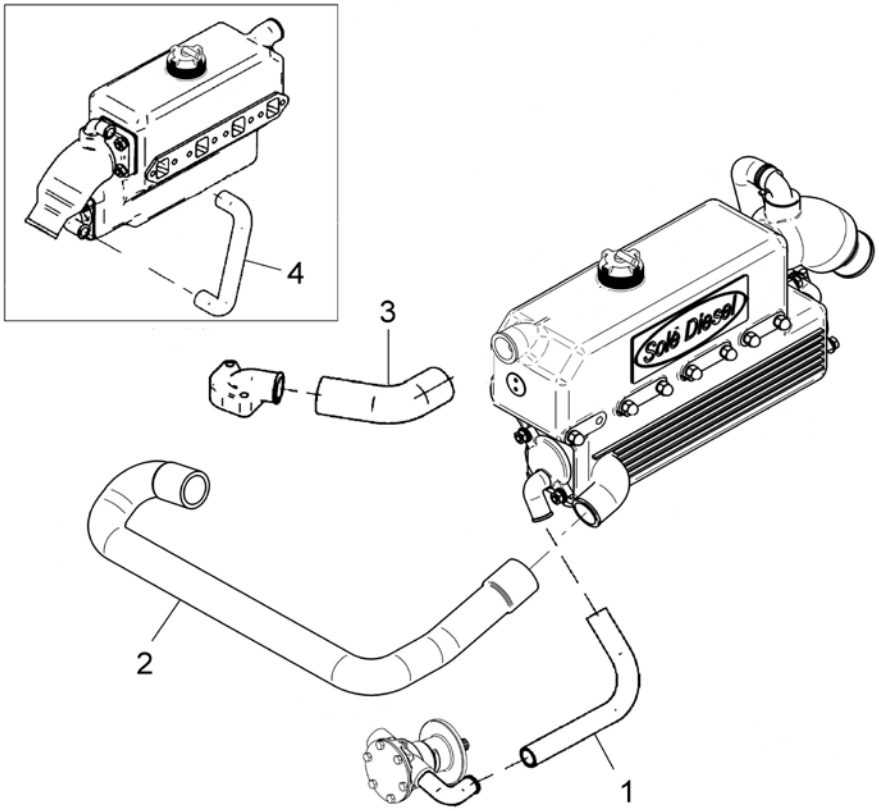

Maintenance Kit

17320101.1.4			Gasket Set		
FIG.	REF.	QTY	DESCR.	FROM	UPTO
1	13222054	8	Seal Valve Stem		
2	17221031	1	Gasket,Thermostat		
3	17321004	1	Gasket, Cylinder Head		
4	17321010	1	Rocker Cover Gasket		
5	17321032	1	Gasket, Inlet Cover		
6	17321035	1	Gasket		
7	17321034.4	1	Pipe Inlet Gasket		
8	17221034	1	Gasket, Inlet Pipe		

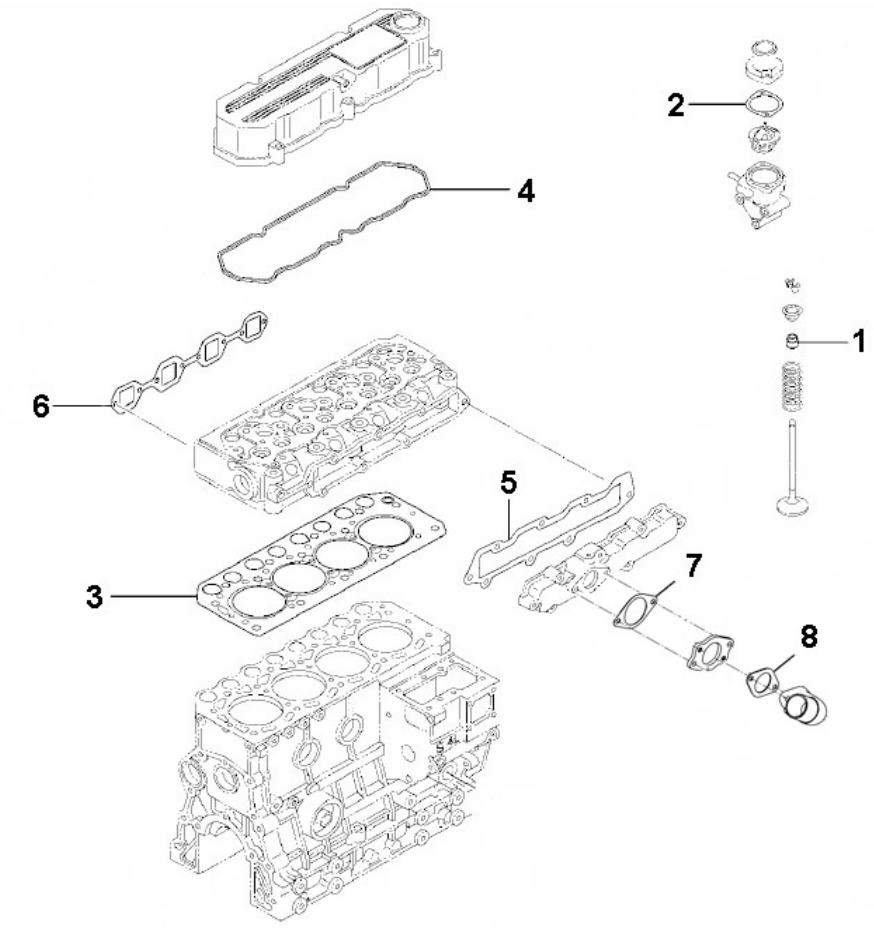

Maintenance Kit

33811000K			Repair Kit Water Pump 1/2"		
FIG.	REF.	QTY	DESCR.	FROM	UPTO
1	31211008	1	1/2" Impeller		
2	31211003	1	Gasket Cover		
3	33411020	1	Seal		
4	33411019	1	Seal		
5	33311013	1	O-Ring D. 15X2		
NS	17011007	1	O-Ring D. 57X3 [NS]		

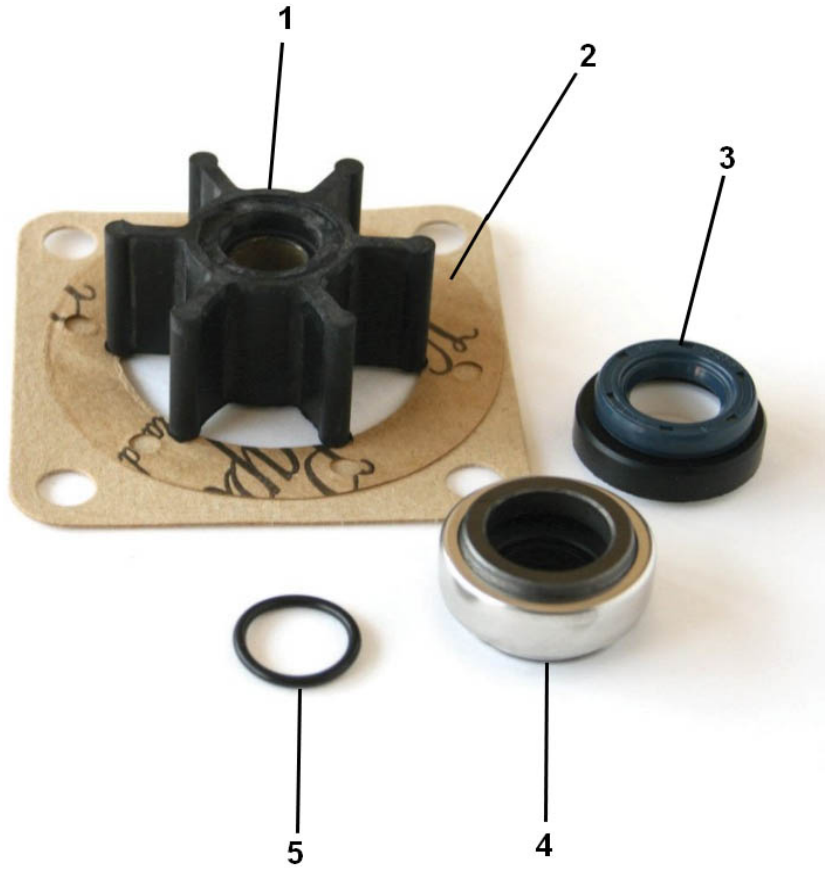

[NS] Not shown

Maintenance Kit

37611000K			Repair Kit Water Pump 1/2"		
FIG.	REF.	QTY	DESCR.	FROM	UPTO
1	31211008	1	1/2" Impeller		
2	37611003	1	O-Ring D. 57x1,5		
3	33411020	1	Seal		
4	33411019	1	Seal		
5	33311013	1	O-Ring D. 15X2		
NS	17011007	1	O-Ring D. 57X3 [NS]		

[NS] Not shown

Gearbox TTMC35A2-B4

	D_5008_1		Housing 1/5		
FIG.	REF.	QTY	DESCR.	FROM	UPTO
1	24910002A	1	Housing Clutch TTMC35A2-B4 [NP]		
2	24910001A	1	Housing Front TTMC35A2-B4 [NP]		
3	24910401	1	Body,Control [NP]		
4	24910212	2	Shim Set [NP]		
5	24910112	1	Shim Set [NP]		
6	24914005A	1	LABEL Assy, TTMC 2.64 [NP]		
7	24913005A	1	LABEL Assy, TTMC 2.33 [NP]		
8	24910008A	1	Gauge Oil LEVEL [NP]		
9	24910010	1	O-Ring		
10	24910417	1	O-Ring		
11	24910103	1	Oil Seal		
12	24910404	1	Seal		
13	24910214	1	Oil Seal [NP]		
14	52102259	2	Bolt DIN 933 M8-30 8.8		
15	52102258	6	Bolt DIN 933 M8-25 8.8		
16	24910004	4	RIVET [NP]		
17	52102257	2	Bolt DIN 933 M8-20 8.8		
18	52120008	2	Nut DIN 934 M8 8.8		
19	24910006	1	LABEL, Oil [NP]		
20	56000073	1	Copper Washer 16-23-1,5		
21	24910011A	1	Plug,oil drain		
22	24910007	2	Pin 10X16 [NP]		
23	53033008	2	Washer GROWER DIN 127-8		
24	52102258	1	Bolt DIN 933 M8-25 8.8		

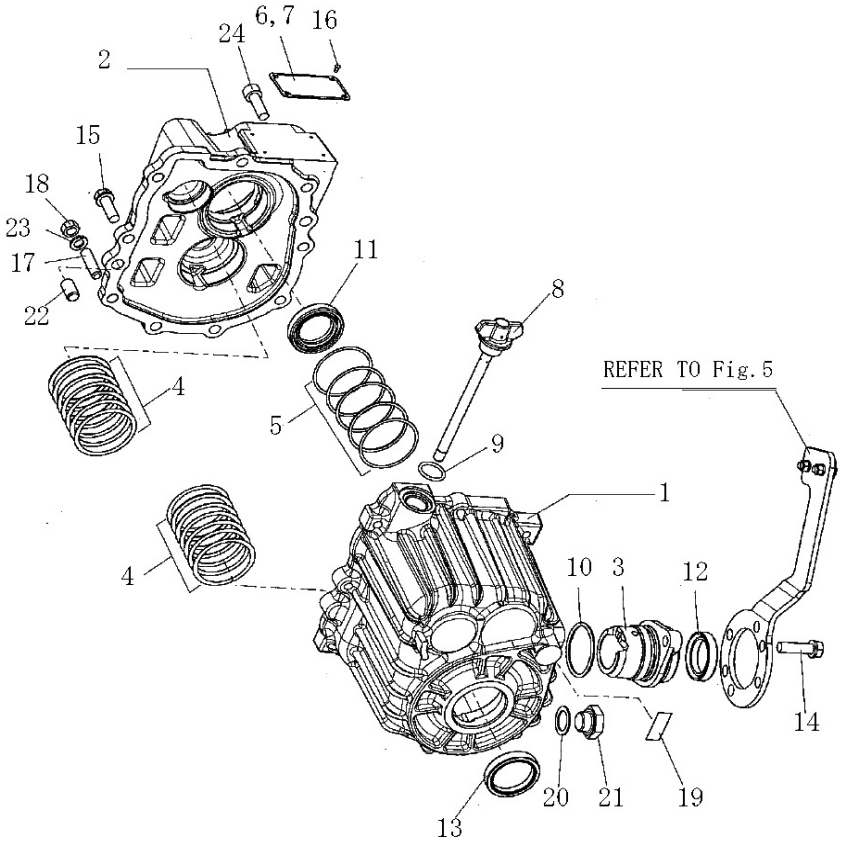

[NP] Not provided

Gearbox TTMC35A2-B4

D_5008_2			Input & Intermediate Shaft 2/5		
FIG.	REF.	QTY	DESCR.	FROM	UPTO
1	24910104A	1	Bearing [NP]		
2	24910105	1	Bearing		
3	24910301A	1	Shaft, IDLE Gear [NP]		
4	30125014	1	Ball Bearing 6202-DDU [NP]		
5	33311014	1	Ball Bearing 6203		
6	24914101A	1	Shaft, Input [NP]		
7	24913101A	1	Shaft, Input [NP]		

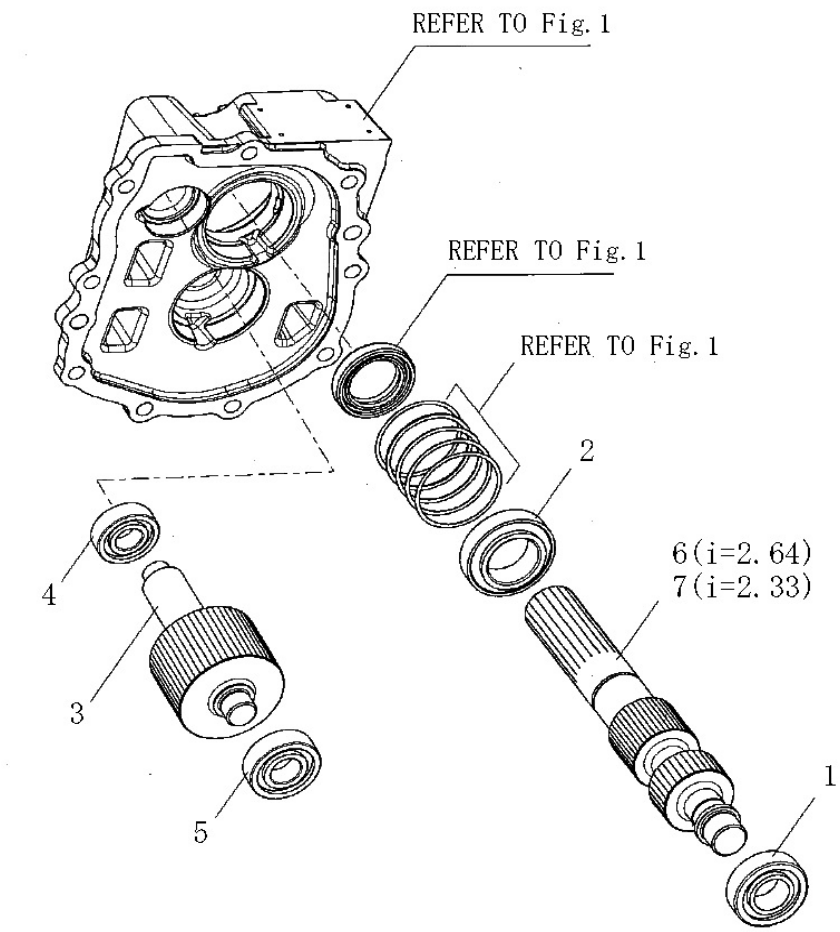

[NP] Not provided

Gearbox TTMC35A2-B4

D_5008_3			Output Shaft 3/5		
FIG.	REF.	QTY	DESCR.	FROM	UPTO
1	24910201	1	Shaft Output [NP]		
2	24910202	1	CONE		
3	24910210A	1	Gear Front [NP]		
4	24910219	1	Nut [NP]		
5	24910215	2	Shim, Adjusting [NP]		
6	24910216	2	Shim, Adjusting [NP]		
7	24910217	2	Spacer,Gear		
8	24910206	1	Bearing		
9	24910204	2	Bearing NEEDLE		
10	24910205	2	Ring		
11	24910207	2	Ring,INNER		
12	24910208	1	Bearing		
13	24910225	1	Flange, Output		
14	24910231	1	O-Ring		
15	24910226	1	Nut		
16	24914203A	1	Gear Front [NP]		
17	24913203A	1	Gear Front [NP]		

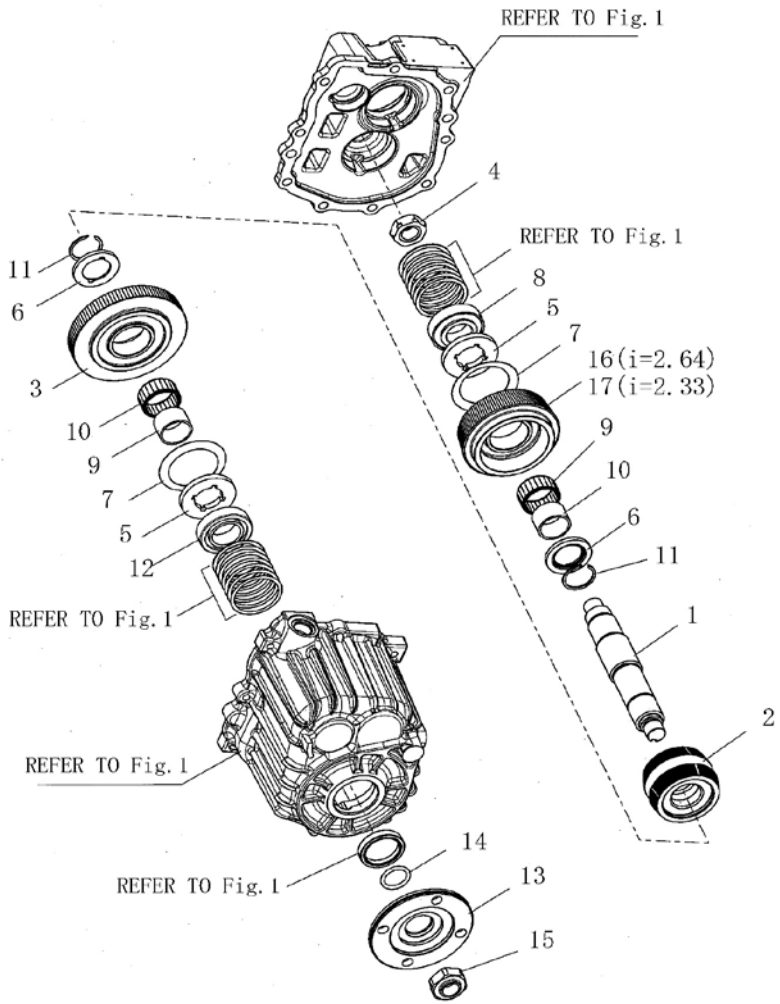

[NP] Not provided

Gearbox TTMC35A2-B4

D_5008_4			Remote Control Device 4/5		
FIG.	REF.	QTY	DESCR.	FROM	UPTO
1	24910915	1	Coupling,cable		
2	24910402A	1	Shaft Assy, Lever [NP]		
3	24910418	1	Pin [NP]		
4	24910419	1	Pin [NP]		
5	24910407A	1	Bolt,SHIFT Lever		
6	24910411	1	Spring [NP]		
7	24910406	1	Shim Set		
8	24910403	1	ARM, Control		
9	24910424	1	Lever,Drive		
10	51030006	1	Washer DIN 125-6		
11	54051155	1	Pin DIN-94 1,6-16		
12	52102258	1	Bolt DIN 933 M8-25 8.8		

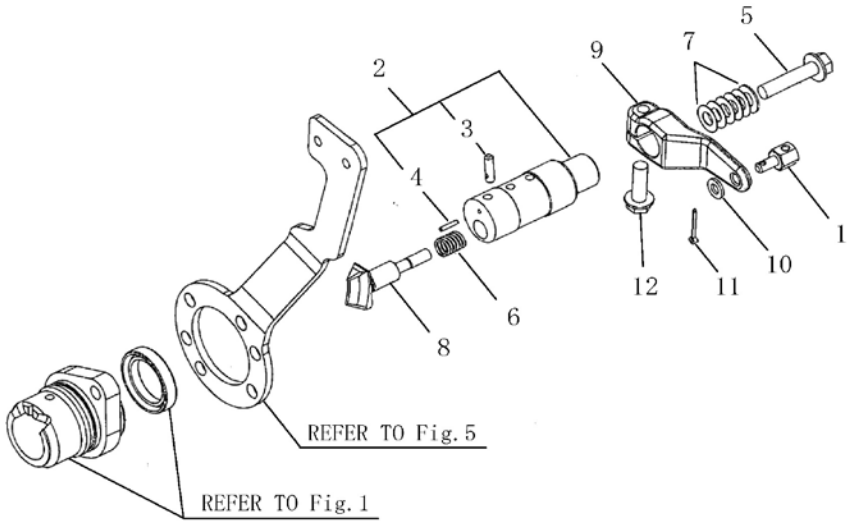

[NP] Not provided

Gearbox TTMC35A2-B4

D_5008_5			Remote Control Pasive Unit 5/5		
FIG.	REF.	QTY	DESCR.	FROM	UPTO
1	24910901A	1	STAY,REMOTE-Control		
2	53033005	2	Washer GROWER DIN 127-5		
3-5	24810913	1	Clamp,CABLE		

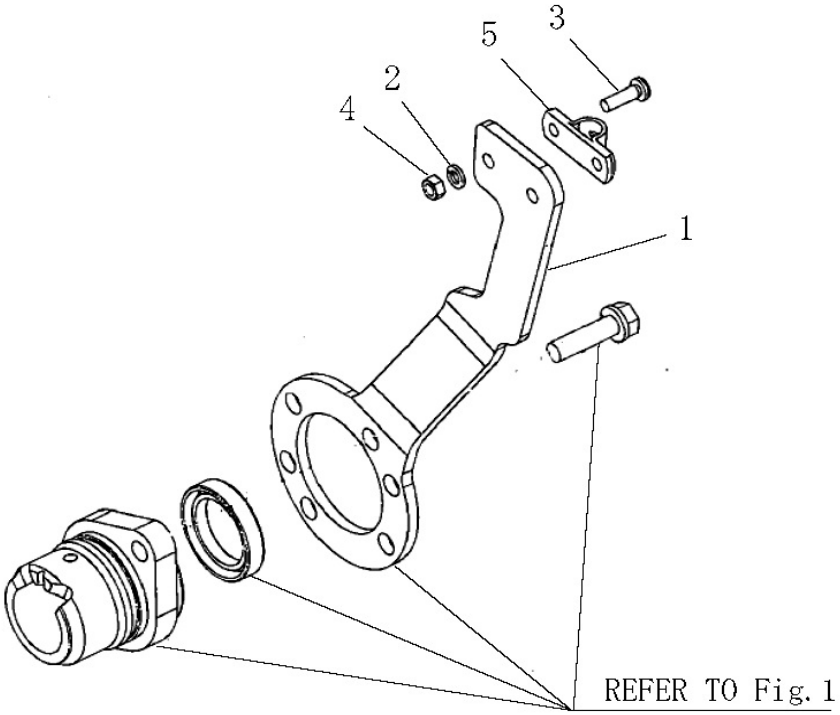

Gearbox TMC-60P

	D_5036_1		Sheet 1/2		
FIG.	**REF.**	**QTY**	**DESCR.**	**FROM**	**UPTO**
2	24880401	1	Cover		
8	24880306	1	Washer		
9	24860411	1	Spring		
10	24880402	1	Shaft		
14	24850005	1	Plate, IDENTIFICATION		
15	24860006	1	ATF Oil Plate		
16	24860419	1	Pin		
17	24810424	1	Lever		
21	24880311	1	Plug		
22	24880038	2	Plug		
23	24880423	1	Pad		
29	24860008P	1	Gauge		
31	24880409	1	Screw		
33	24850011	1	Plug,oil drain		
36	24860404	1	Oil Seal		
39	24860417	1	O-Ring		
44	24810530	2	Washer DIN 125-8 [NP]		
46	24810014	3	Washer GROWER DIN 127-8 [NP]		
49	24860418	1	Pin DIN 1481 3-20 [NP]		
51	24810047	8	Bolt DIN 933 M8-25 8.8 [NP]		
52	52103258	2	Bolt DIN 912 M8-25 8.8		
53	52101263	2	Bolt DIN 931 M8-50 8.8		
54	24860071	2	STUD		
57	24810515	2	Nut DIN 934 M8 8.8 [NP]		
59	51123008	1	Nut DIN 985 M8 5.6		

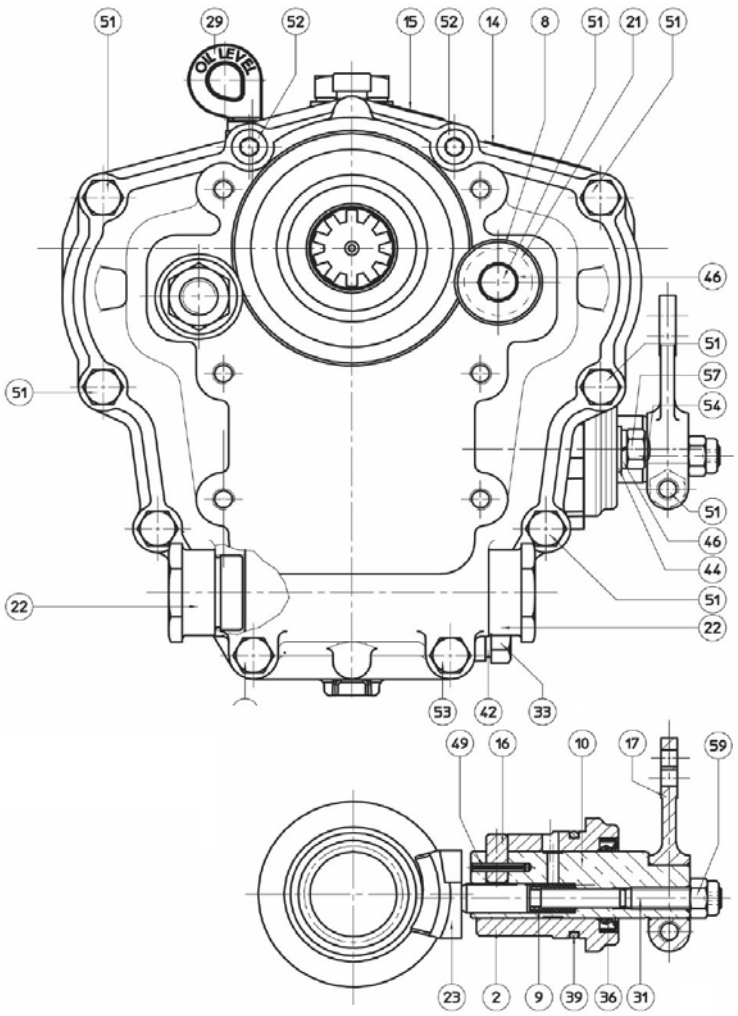

[NP] Not provided

Gearbox TMC-60P

	D_5036_2		Sheet 2/2		
FIG.	**REF.**	**QTY**	**DESCR.**	**FROM**	**UPTO**
1	24880002P	1	Box		
3	24880001	1	Cover		
4	24880305	2	Spacer		
5	24813500.67	6	Spacer		
6	24880218	2	Shim		
7	24880217	2	Shim		
11	24880301	1	INTERMEDIATE Shaft		
12	24880201	1	Shaft Output		
13A	24882101P	1	Input Shaft		
13B	24883101P	1	Input Shaft		
13C	24884101	1	Input Shaft		
13D	24885101P	1	Input Shaft		
18	24850099	1	Nut		
19	24880222	1	Nut		
20	24810065	1	Plug		
24	24880202	1	Clutch		
25A	24882203	1	Gear		
25B	24882203	1	Gear		
25C	24884203	1	Gear		
25D	24884203	1	Gear		
26A	24882203	1	Gear		
26B	24883210	1	Gear		
26C	24884210	1	Gear		
26D	24885210	1	Gear		
27	24880302	1	Gear		
28	24880224	1	Flange Output		
30	24880310	1	Nut		
32	24880205	2	CAGE		
34	24830011	1	Plug		
35	24880309	1	Ring		
37	24880103A	1	Seal,oil BA 30-47-7 [NP]		
38	24890214	1	Oil Seal		
40	24880204	2	Bearing, needle		
41	24880308	1	Washer		
42	24810063	2	Plane Washer		

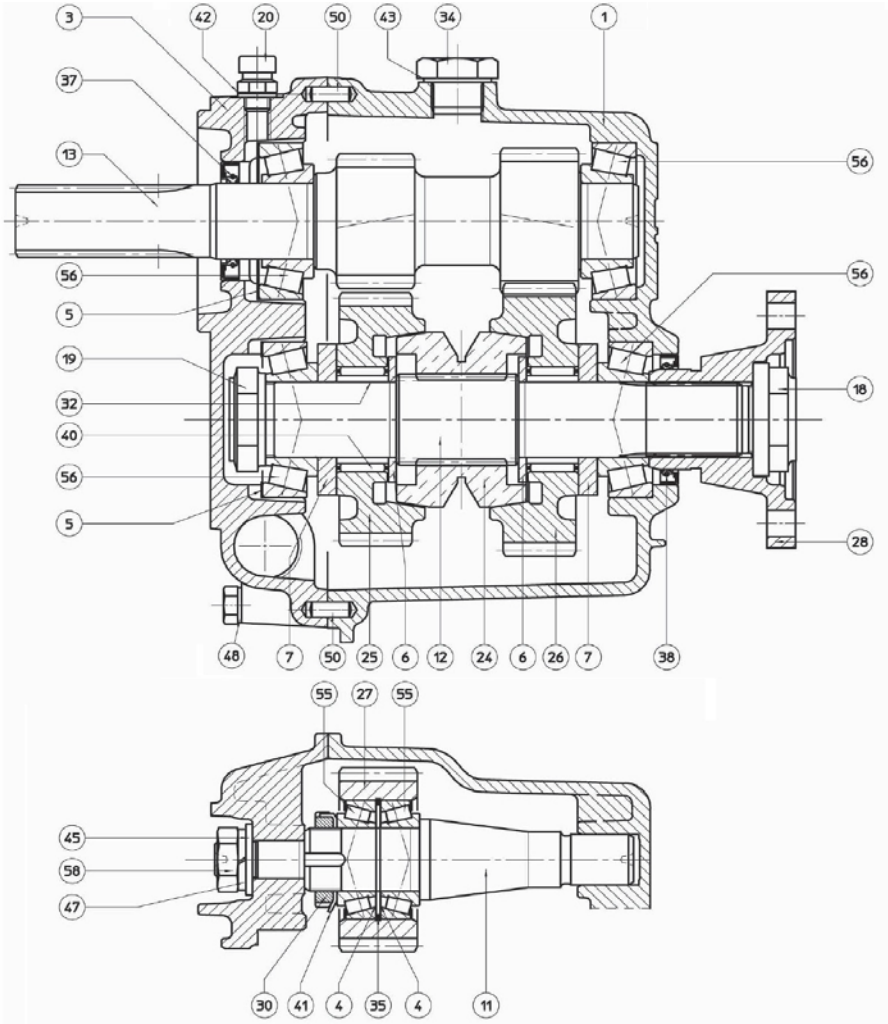

[NP] Not provided

Gearbox TMC-60P

	D_5036_2		Sheet 2/2		
FIG.	**REF.**	**QTY**	**DESCR.**	**FROM**	**UPTO**
43	56000083	1	Washer 21-26-1,5		
45	24813500.97	1	Washer DIN 125-14 [NP]		
47	24810221	1	Washer GROWER DIN 127-14 [NP]		
48	24850093	10	Washer		
50	24860023	2	Pin		
55	24860206	2	Conical Roller Bearing 32005		
56	25710104	4	Conical Roller Bearing 32206-J2/Q		
58	24880307	1	Nut		

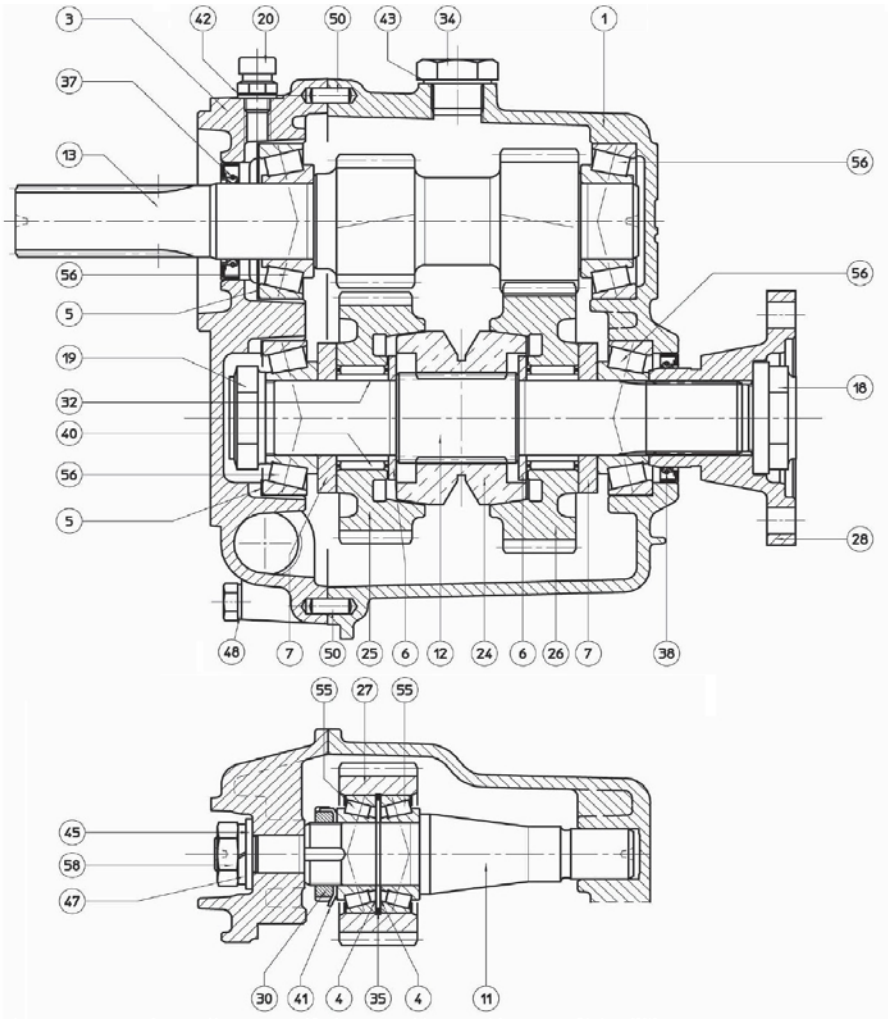

Gearbox TMC-60P

	D_5035_3		Kit de Service		
FIG.	**REF.**	**QTY**	**DESCR.**	**FROM**	**UPTO**
1	24883401	1	Gasket Kit		
2	A0201000	2	ATF Sole Diesel Oil 1L		

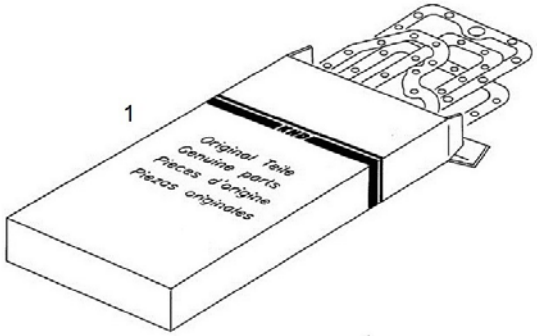

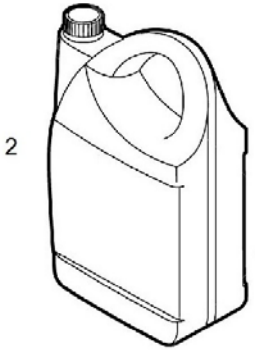

Gearbox TMC-60A

	D_5034_1		Sheet 1/2		
FIG.	REF.	QTY	DESCR.	FROM	UPTO
1	24880002A	1	Box		
3	24880001A	1	Cover		
4	24880305	2	Spacer		
5	24813500.67	6	Spacer		
6	24880218	2	Shim		
7	24880217	2	Shim		
10	24880301	1	INTERMEDIATE Shaft		
11	24880201	1	Shaft Output		
12A	24884101	1	Input Shaft		
12B	24883101A	1	Input Shaft		
17	24850099	1	Nut		
18	24880222	1	Nut		
21	24880202	1	Clutch		
22	24880302	1	Gear		
23A	24884210A	1	Gear		
23B	24883210A	1	Gear		
24	24883203A	1	Gear [NP]		
25	24880224	1	Flange Output		
27	24880310	1	Nut		
29	24880205	2	CAGE		
31	24830011	1	Plug		
32	24880309	1	Ring		
34	22210103	1	Seal,oil BA 30-47-7		
35	25210214	1	Seal,oil 40-52-7		
37	24880204	2	Bearing, needle		
38	24880308	1	Washer		
40	56000083	1	Washer 21-26-1,5		
42	51030014	1	Washer DIN 125-14		
44	53033014	1	Washer GROWER DIN 127-14		
45	24850093	10	Washer		
47	24860023	2	Pin		
52	24860206	2	Conical Roller Bearing 32005		
53	25710104	4	Conical Roller Bearing 32206-J2/Q		
55	24880307	1	Nut		

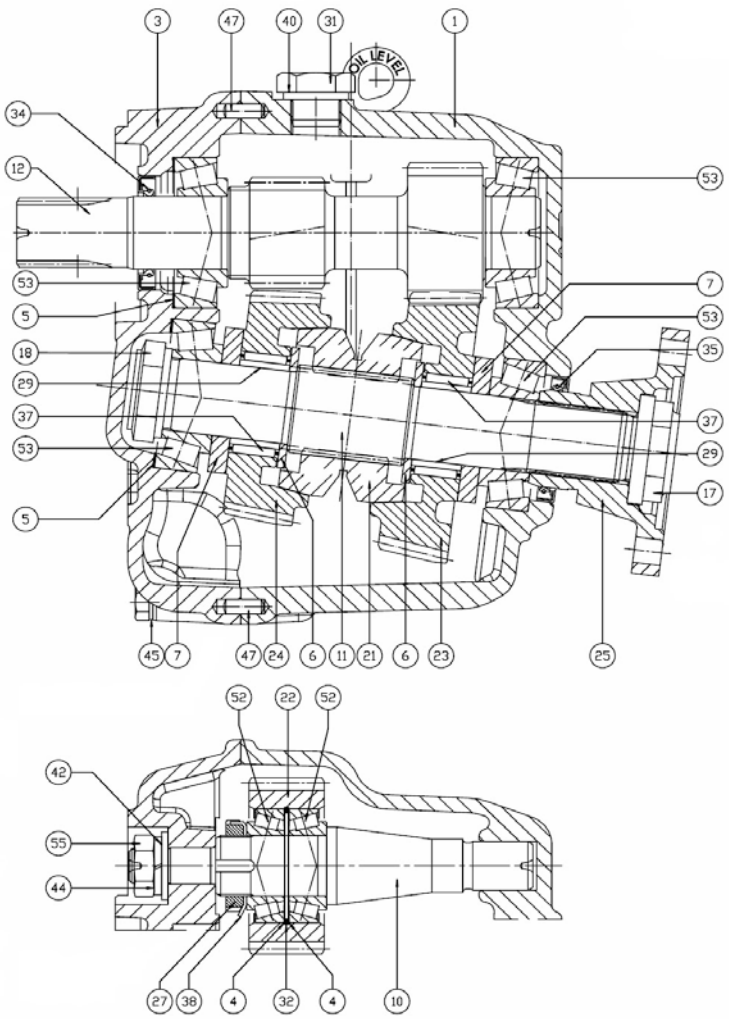

[NP] Not provided

Gearbox TMC-60A

	D_5034_2		Sheet 2/2		
FIG.	**REF.**	**QTY**	**DESCR.**	**FROM**	**UPTO**
2	24880401	1	Cover		
8	24860411	1	Spring		
9	24880402	1	Shaft		
13	24850005	1	Plate, IDENTIFICATION		
14	24860006	1	ATF Oil Plate		
15	24860419	1	Pin		
16	24810424	1	Lever		
19	24810065	1	Plug		
20	24880423	1	Pad		
26	24860008P	1	Gauge		
28	24880409	1	Screw		
30	24850011	1	Plug,oil drain		
33	24860404	1	Oil Seal		
36	24860417	1	O-Ring		
39	24810063	2	Plane Washer		
41	51030008	2	Washer DIN 125-8		
43	53033008	2	Washer GROWER DIN 127-8		
46	53052210	1	Pin DIN 1481 3-20		
48	52102258	7	Bolt DIN 933 M8-25 8.8		
49	52103258	2	Bolt DIN 912 M8-25 8.8		
50	52101263	2	Bolt DIN 931 M8-50 8.8		
51	24860071	2	STUD		
54	52120008	2	Nut DIN 934 M8 8.8		
56	51123008	1	Nut DIN 985 M8 5.6		

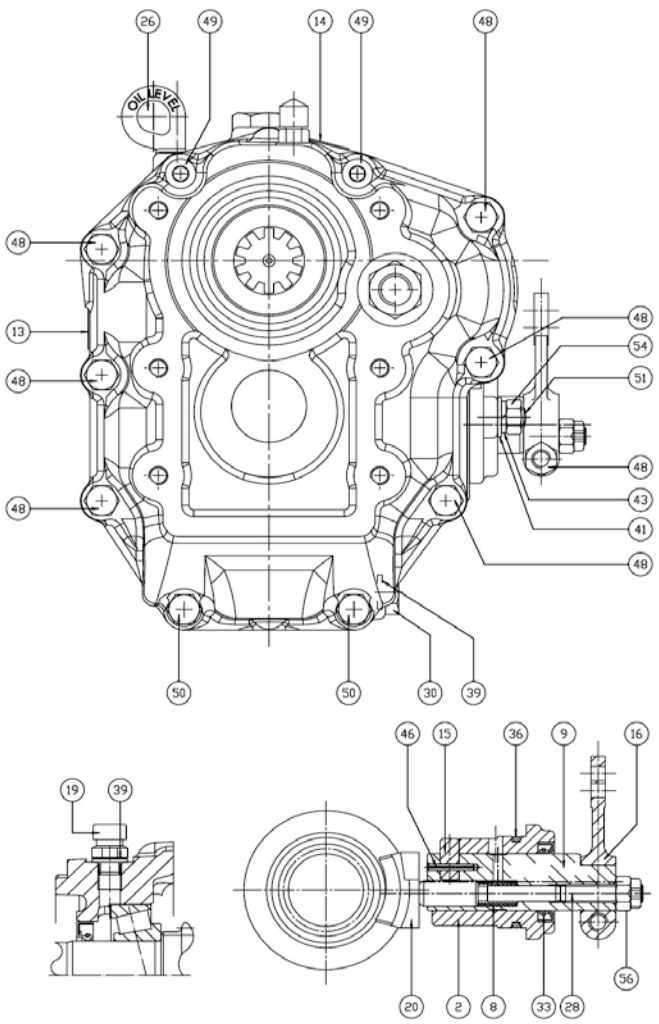

Gearbox TMC-60A

	D_5035_3		Kit de Service		
FIG.	**REF.**	**QTY**	**DESCR.**	**FROM**	**UPTO**
1	24883401	1	Gasket Kit		
2	A0201000	2	ATF Sole Diesel Oil 1L		

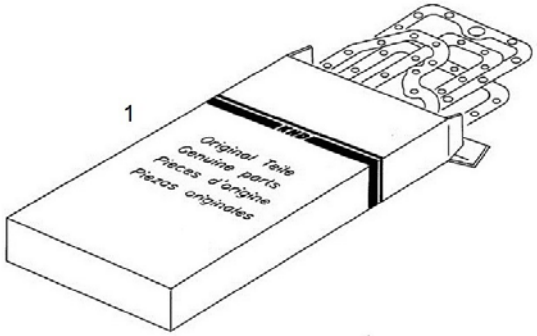

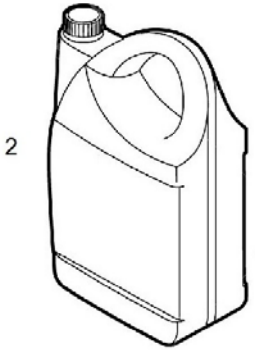

Gearbox TMC-260

	D_5032_1		Sheet 1/3		
FIG.	REF.	QTY	DESCR.	FROM	UPTO
1	24830011	1	Plug		
2	24890008	1	Gauge Oil Level		
3	56000083	1	Washer 21-26-1,5		
4	24890001	1	Cover		
5	24810065	1	Plug		
6	24810063	2	Plane Washer		
7	24890102	1	Cover		
8	24850212	1	Conical Roller Bearing 30207A		
9A	24895101	1	Input Shaft		
9B	24894101	1	Input Shaft		
9C	24893101	1	Input Shaft		
9D	24892101	1	Input Shaft		
10	24810103	1	Oil Grommet		
11	25710104	3	Conical Roller Bearing 32206-J2/Q		
12	24880222	1	Nut		
13	24880201	1	Shaft Output		
14	24880217	2	Shim		
15	24880204	2	Bearing, needle		
16	24880218	2	Shim		
17A	24894203	1	Gear		
17B	24892203	1	Gear		
18	52101261	9	Bolt DIN 931 M8-40 8.8		
19	24850093	17	Washer		
20	24860023	2	Pin		
21	24890302	1	Gear		
22	24890202	1	Clutch		
23	24890307	1	Nut		
24A	24894203	1	Gear		
24B	24895210	1	Gear		
24C	24894210	1	Gear		
24D	24893210	1	Gear		
25	24880205	2	CAGE		
26	24850011	1	Plug,oil drain		
33	52102258	1	Bolt DIN 933 M8-25 8.8		
46	24890205	1	Cover		

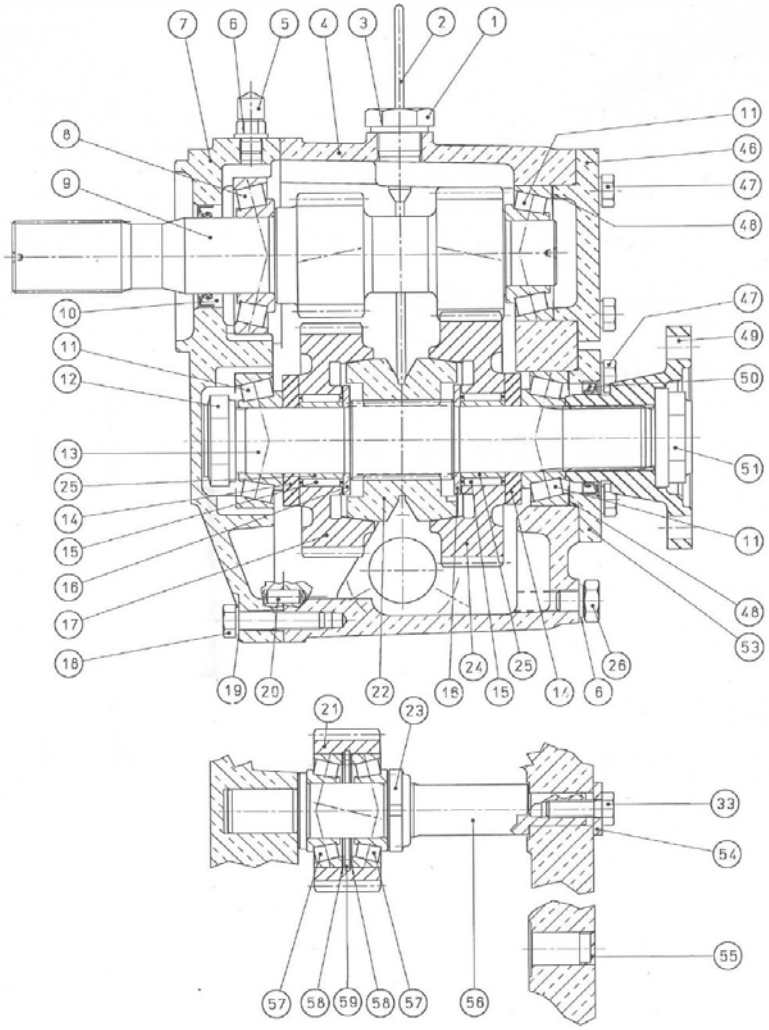

[NP] Not provided

Gearbox TMC-260

	D_5032_1		Sheet 1/3		
FIG.	REF.	QTY	DESCR.	FROM	UPTO
47	52102259	8	Bolt DIN 933 M8-30 8.8		
48	24813500.67	6	Spacer		
49	24880224	1	Flange Output		
50	24890214	1	Oil Seal		
51	24850099	1	Nut		
53	24890208	1	Cover		
54	24890306	1	Washer		
55	24890305	1	Plug		
56	24890301	1	INTERMEDIATE Shaft		
57	24860207	2	Conical Roller Bearing 30205A		
58	24890304	2	Washer [NP]		
59	53041052	1	CIRClip DIN 472 I-52		

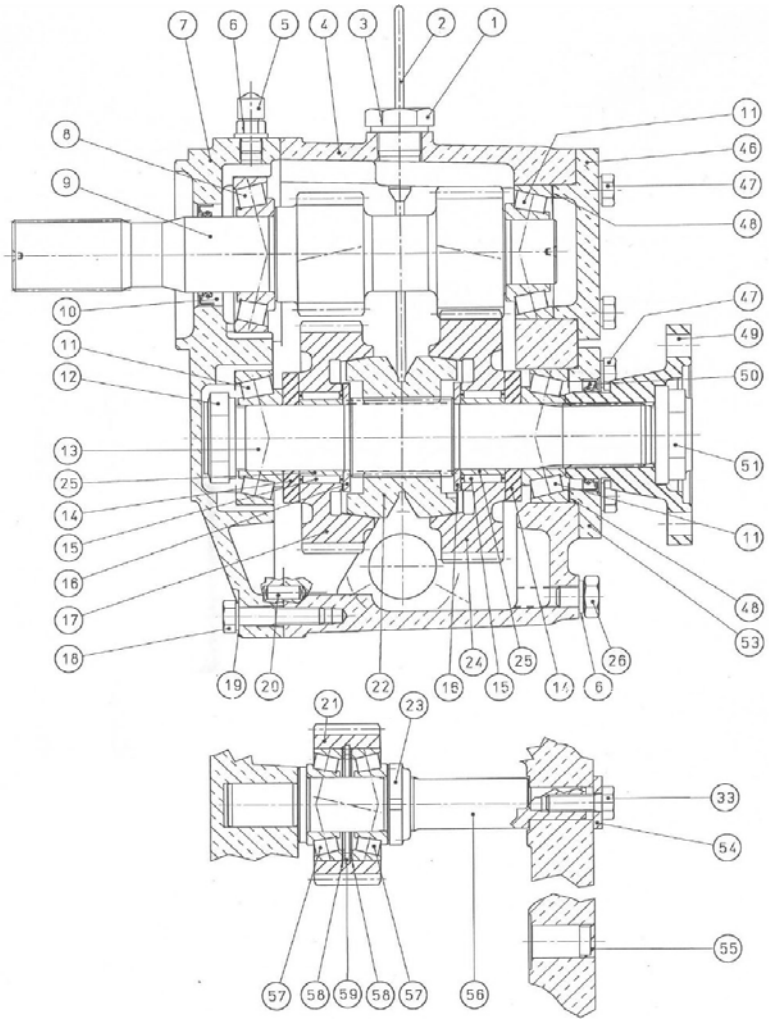

Gearbox TMC-260

	D_5032_2		Sheet 2/3		
FIG.	**REF.**	**QTY**	**DESCR.**	**FROM**	**UPTO**
27	24890026	2	Cover		
28	53052210	1	Pin DIN 1481 3-20		
29	52102257	6	Bolt DIN 933 M8-20 8.8		
30	24880423	1	Pad		
31	24860417	1	O-Ring		
32	24860411	1	Spring		
33	52102258	1	Bolt DIN 933 M8-25 8.8		
34	52120008	2	Nut DIN 934 M8 8.8		
35	51123008	1	Nut DIN 985 M8 5.6		
36	52111260	1	ROD DIN 913 M8-35 8.8		
37	24860071	2	STUD		
38	53033008	2	Washer GROWER DIN 127-8		
39	51030008	2	Washer DIN 125-8		
40	24880402	1	Shaft		
41	24860404	1	Oil Seal		
42	24880401	1	Cover		
43	24810424	1	Lever		
44	24860419	1	Pin		
45	24850005	1	Plate, IDENTIFICATION		
52	53038006	6	Washer DIN 6798-A 6		

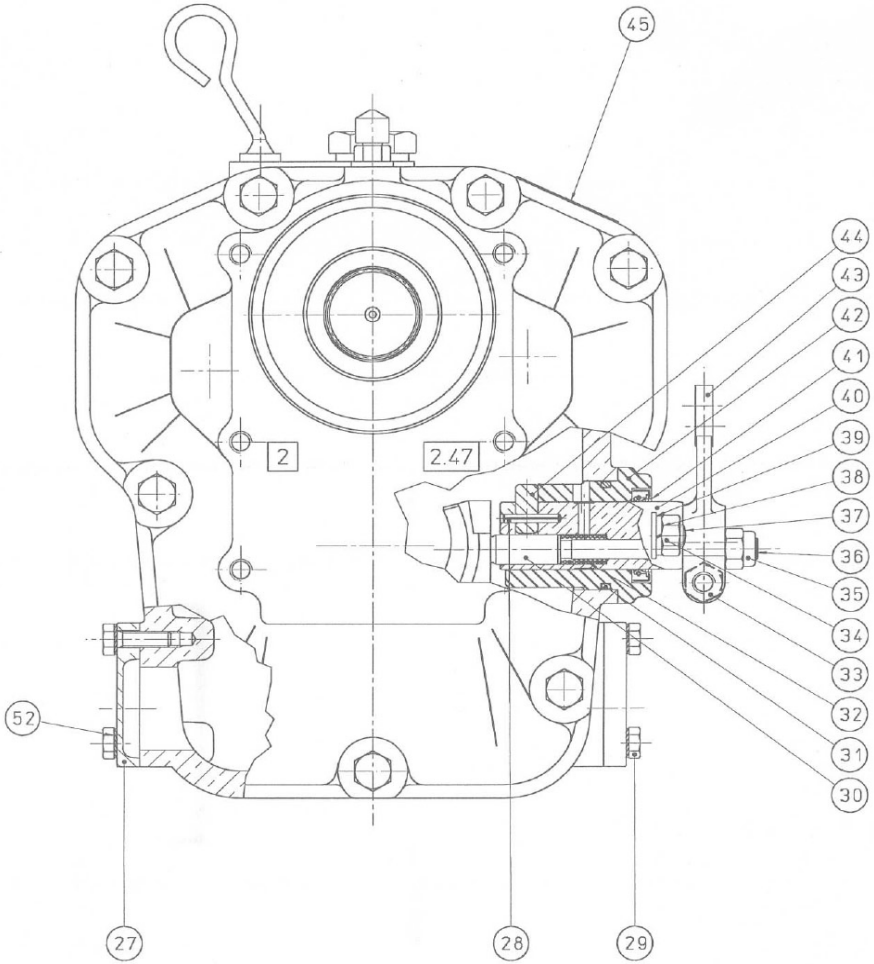

	D_5032_3		Cooling System 3/3		
FIG.	REF.	QTY	DESCR.	FROM	UPTO
1	24890051	2	Cover		
2	24890052	2	O-Ring D. 32X2,5		
3	24890053	2	Elbow		
4	24890054	1	Cooler Pipe		

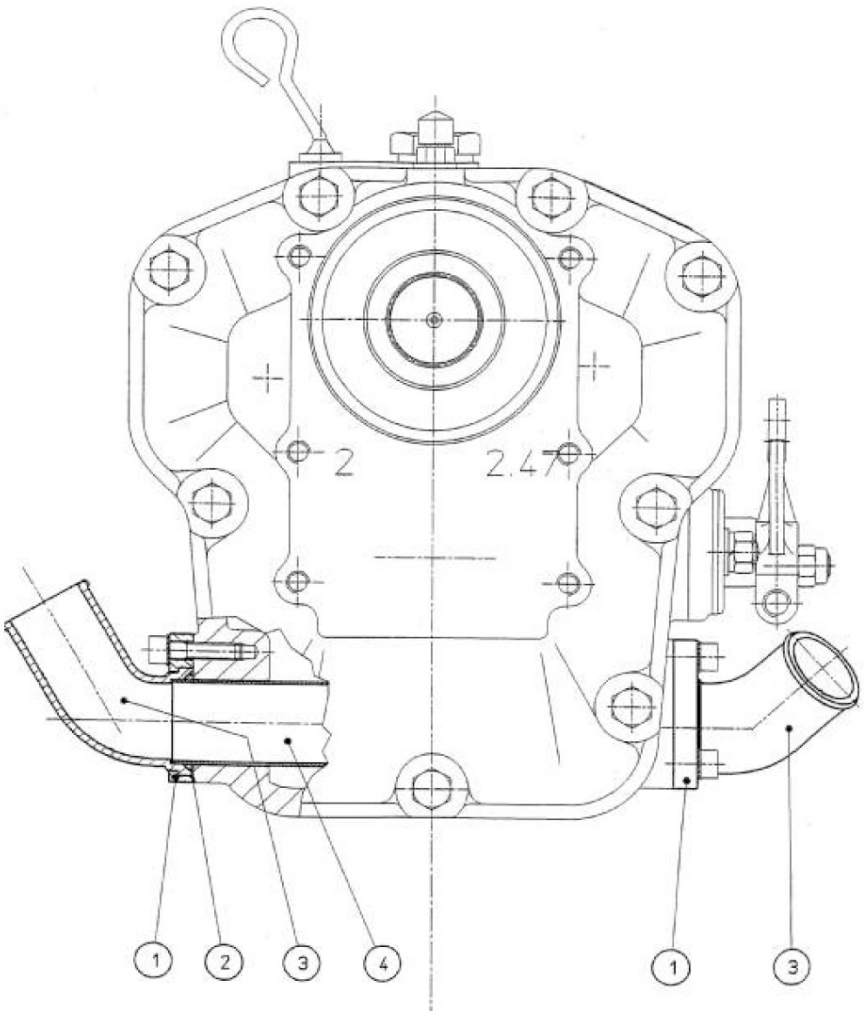

Gearbox TMC-260

	D_5032_4		Maintenance Kit		
FIG.	**REF.**	**QTY**	**DESCR.**	**FROM**	**UPTO**
1	24890401	1	Kit Gasket		
2	A0201000	2	ATF Sole Diesel Oil 1L		

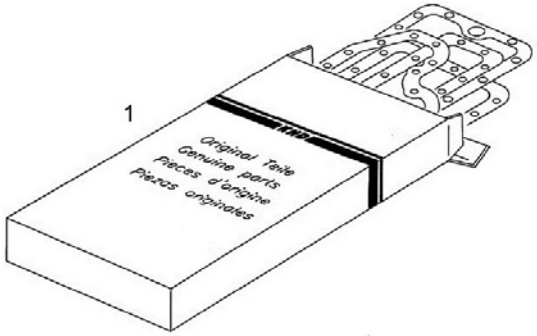

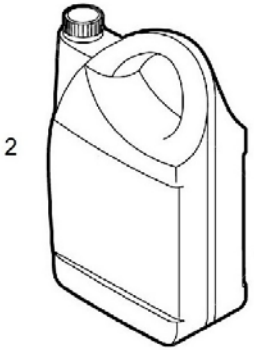

SP60 S.Drive

D_5037_1			Sheet 1/4 SP60 S.Drive V1		
FIG.	REF.	QTY	DESCR.	FROM	UPTO
13	24813500.13	1	Body [NP]		
26	24813500.26	6	Washer		
27	24860047	6	Bolt DIN 912 M8-30 8.8 [NP]		
38	24813500.38	1	Bracket Control		
39	24810424	1	Lever		
40	24810047	1	Bolt DIN 933 M8-25 8.8 [NP]		
50	24813500.50	1	Flange CLOSING MEMBRANE		
53	24810063	2	Plane Washer		
54	24810065	1	Plug		
55	24813500.55	1	Gauge Oil LEVEL		
59	24813500.59	1	Body		
71	24813500.71	8	Washer [NP]		
72	24813500.72	8	Screw		
73	24813500.73	1	Propeller Shaft		
78	24813500.78	1	Body		
84	24813500.84	1	Anode SP60		
85	24813500.85	1	Spacer		
87	24813500.87	1	Plug,oil drain		
89	24813500.89	4	Bolt DIN 933 M6-10 8.8 [NP]		

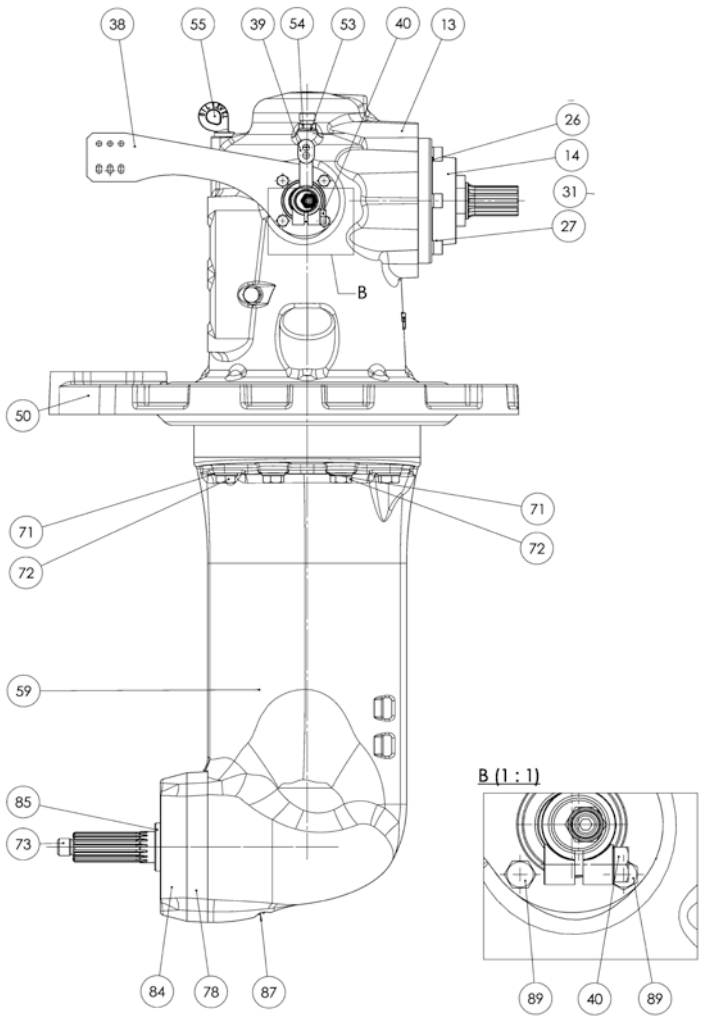

[NP] Not provided

D_5037_2			Sheet 2/4 SP60 S.Drive V1		
FIG.	REF.	QTY	DESCR.	FROM	UPTO
14	24813500.14	1	Body		
28	24813500.28	1	Body Control		
29	24860404	1	Oil Seal		
31	24860402	1	Shaft		
35	24860423	1	PAD		
43	24810522	1	Washer		
44	24813500.44	1	Plug [NP]		
45	24813500.45	1	Cover		
51	24813500.51	1	Plug [NP]		
52	24860006	1	ATF Oil Plate		
92	24830035	1	Washer		
93	24813500.93	1	Plug		

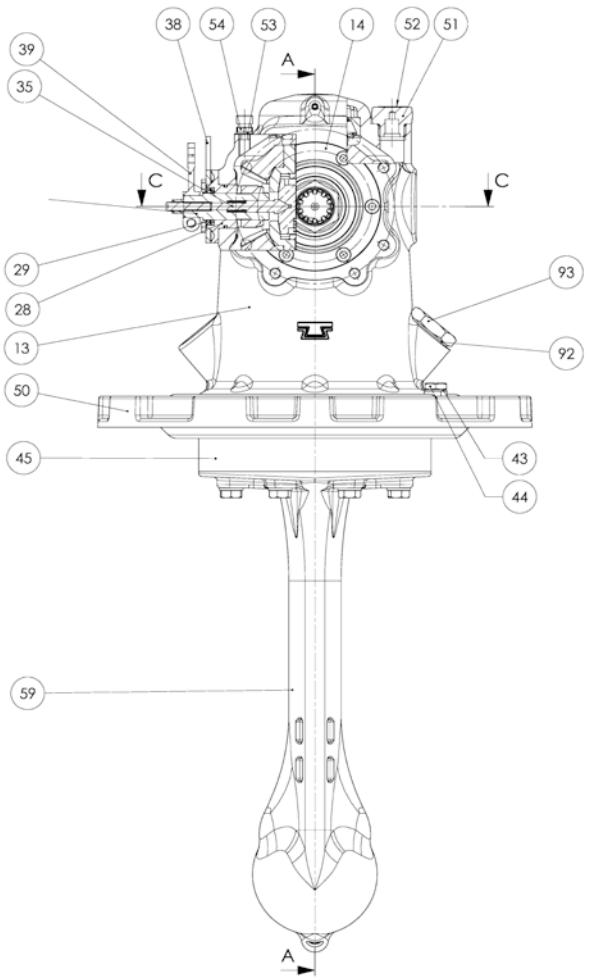

[NP] Not provided

	D_5037_3		Sheet 3/4 SP60 S.Drive V1		
FIG.	REF.	QTY	DESCR.	FROM	UPTO
1	24813500.01	1	Shaft,Output [NP]		
2	24813500.02	1	Cone Clutch		
3	24813500.03	4	Spacer [NP]		
4	24860217	2	Spacer		
5	24813500.05	2	Ring,Bearing		
6	24813500.06	4	Bearing, needle		
7	24813500.07	2	Gear		
8	24813500.08	2	Cover		
9	24813500.09	2	Nut		
10	24813500.10	2	Bearing		
11	24810333	2	Spacer		
12	24813500.12	1	Spring		
17	24813500.17	1	Shaft		
20	24813500.20	1	Screw		
41	24813500.41	1	Gasket		
42	24813500.42	1	Gasket		
46	24813500.46	2	O-Ring		
57	24810506	1	Screw		
60	24813500.60	1	Shaft		
61	24813500.61	1	Ring		
62	24860206	1	Conical Roller Bearing 32005		
63	24813500.63	1	Guide [NP]		
64	24813500.64	1	CIRClip		
65	24813500.65	1	O-Ring		
66	24813500.66	1	Bearing		
67	24813500.67	2	Spacer		
68	24813500.68	1	Gear		
69	24813500.69	2	Washer [NP]		
70	24813500.70	1	Nut		
74	24813500.74	1	Gear		
75	24850108	2	Shim Adjusting		
76	24813500.76	1	Bushing		
77	24813500.77	2	HELICOil		
79	24813500.79	2	Oil Seal		
80	24813500.80	2	O-Ring D. 90X3,5		

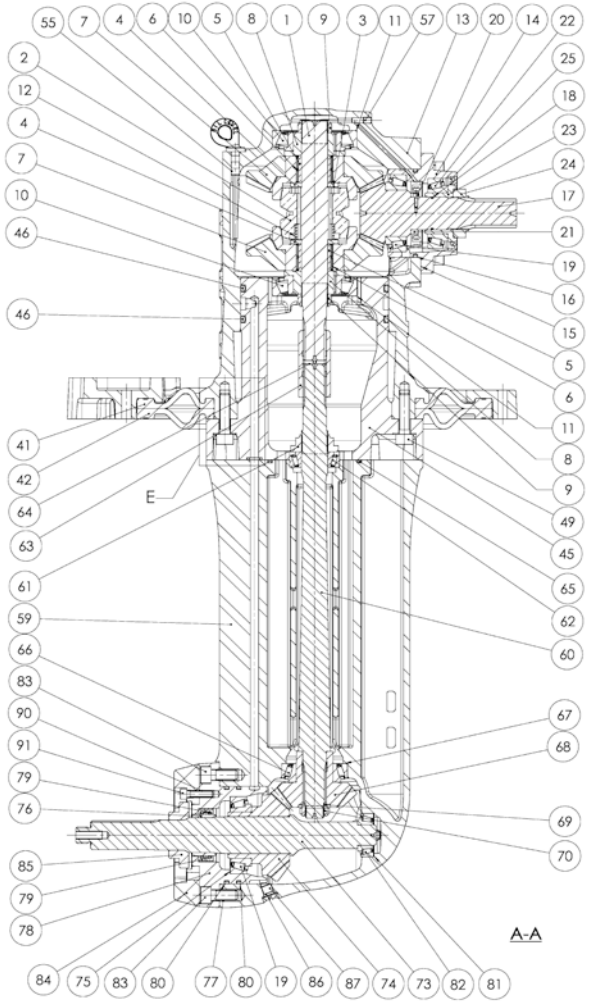

[NP] Not provided

D_5037_3			Sheet 3/4 SP60 S.Drive V1		
FIG.	REF.	QTY	DESCR.	FROM	UPTO
81	24813500.81	3	Spacer		
82	24813500.82	1	Bearing		
83	24813500.83	2	Screw		
86	24813500.86	1	O-Ring D. 8X1,5		
90	24813500.90	3	HELICOil [NP]		
91	24813500.91	3	Screw		

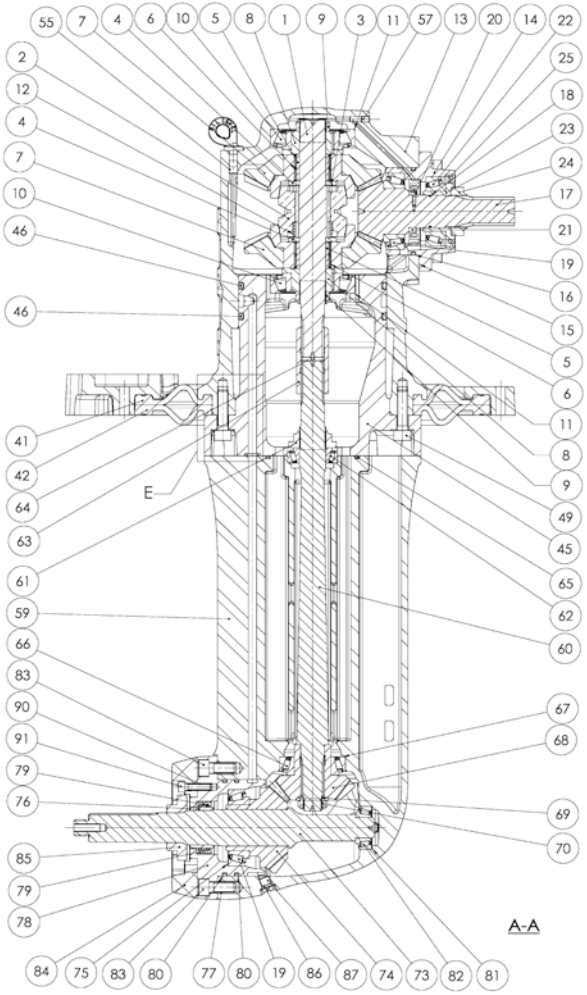

D_5037_4			Sheet 4/4 SP60 S.Drive V1		
FIG.	REF.	QTY	DESCR.	FROM	UPTO
15	24813500.15	2	Spacer		
16	24813500.16	1	O-Ring		
18	24813500.18	1	O-Ring		
19	24850104	2	Conical Roller Bearing 32009-X		
21	24813500.21	1	Impeller		
22	24813500.22	1	Bearing		
23	24813500.23	1	Cover		
24	24813500.24	1	Nut		
25	24813500.25	1	Oil Seal		
30	24860417	1	O-Ring		
32	24860419	1	Pin		
33	24860418	1	Pin DIN 1481 3-20 [NP]		
34	24860411	1	Spring		
36	24860409	1	Screw		
37	24860408	1	Nut DIN 985 M8 5.6 [NP]		
47	24813500.47	1	O-Ring		
48	24813500.48	8	Washer [NP]		
49	24813500.49	8	Screw		
56	24850011	1	Plug,oil drain		
58	24850005	1	Plate, IDENTIFICATION		
88	24813500.88	4	Screw [NP]		

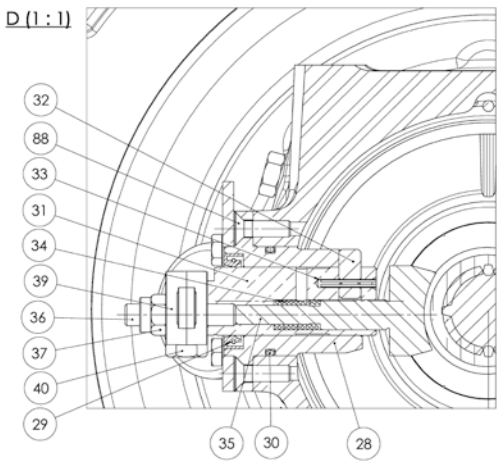

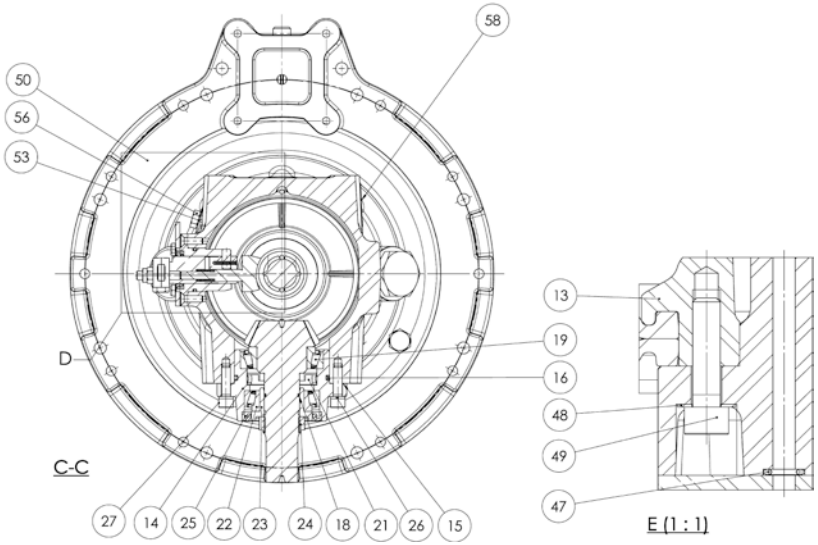

[NP] Not provided

SP60 S.Drive

D_5037_6			Sheet 1/4 SP60 S.Drive V2		
FIG.	REF.	QTY	DESCR.	FROM	UPTO
1	24813500.38	1	Bracket Control	27/09/2016	
2	24813500.95	1	Bracket [NP]	27/09/2016	
3	24813500.59	1	Body	27/09/2016	
4	24813500.13.1	1	Body	27/09/2016	
5	24813500.14	1	Body	27/09/2016	
7	24813500.104.1	1	Body	27/09/2016	
17	24813500.94	1	Spacer	27/09/2016	
25	24813500.73	1	Propeller Shaft	27/09/2016	
28	24813500.78	1	Body	27/09/2016	
31	24813500.96	1	Flexible	27/09/2016	
34	24810424	1	Lever	27/09/2016	
38	24813500.50	1	Flange CLOSING MEMBRANE	27/09/2016	
40	24813500.116	1	Zinc Anode	27/09/2016	
41	24810065	1	Plug	27/09/2016	
54	24813500.123	1	Screw	27/09/2016	
74	24810063	2	Plane Washer	27/09/2016	
77	24813500.126	8	Washer	27/09/2016	
79	24820075	6	Washer GROWER DIN 127-10 [NP]	27/09/2016	
80	24850093	12	Washer	27/09/2016	
82	24813500.26	6	Washer	27/09/2016	
88	24830106	12	Bolt DIN 933 M8-30 8.8 [NP]	27/09/2016	
89	24860047	6	Bolt DIN 912 M8-30 8.8 [NP]	27/09/2016	
90	24820076	6	Bolt DIN 933 M10-30 8.8 [NP]	27/09/2016	

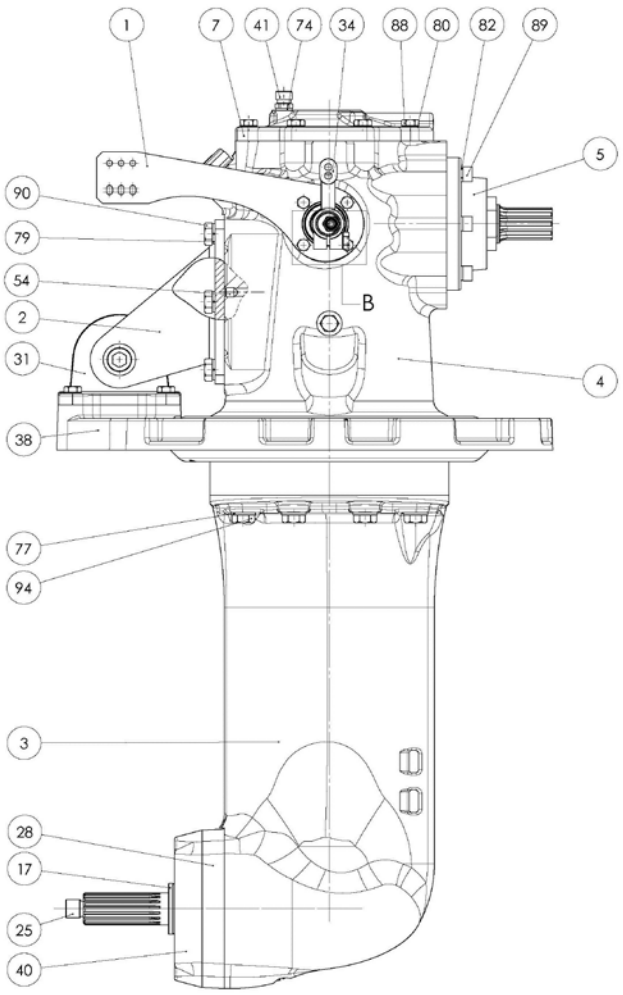

[NP] Not provided

	D_5037_7		Sheet 2/4 SP60 S.Drive V2		
FIG.	REF.	QTY	DESCR.	FROM	UPTO
6	24813500.28	1	Body Control	27/09/2016	
104	24813500.131	1	Nut	27/09/2016	
29	24813500.45	1	Cover	27/09/2016	
50	24813500.121	1	Gauge Oil Level	27/09/2016	
56	24813500.124	1	Plug	27/09/2016	
58	24850011	1	Plug,oil drain	27/09/2016	
59	24813500.93	1	Plug	27/09/2016	
75	24830035	1	Washer	27/09/2016	
76	24810522	1	Washer	27/09/2016	
87	24810047	1	Bolt DIN 933 M8-25 8.8 [NP]	27/09/2016	
94	24813500.72	8	Screw	27/09/2016	

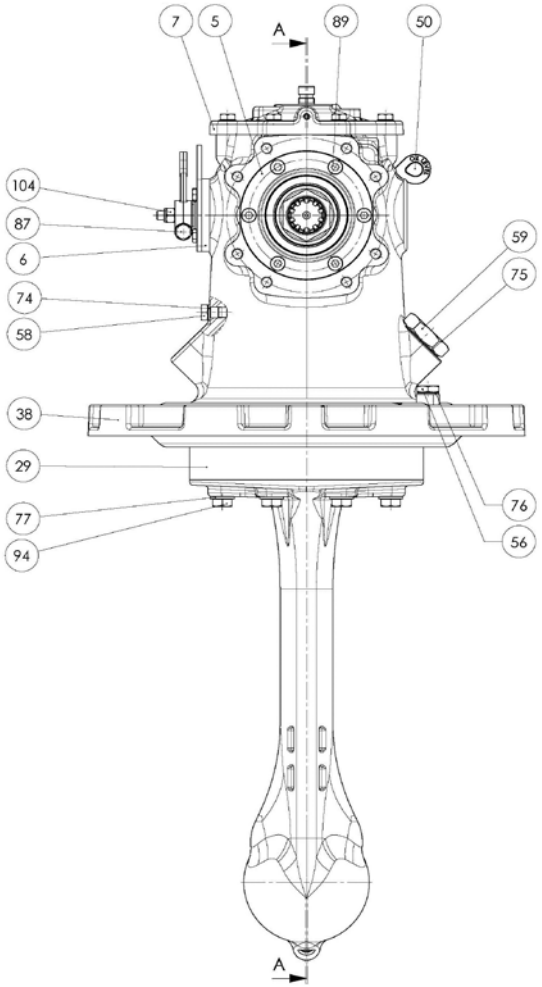

[NP] Not provided

	D_5037_8		Sheet 3/4 SP60 S.Drive V2		
FIG.	REF.	QTY	DESCR.	FROM	UPTO
8	24813500.42	1	Gasket	27/09/2016	
9	24813500.41	1	Gasket	27/09/2016	
10	24810333	6	Spacer	27/09/2016	
100	24813500.10	2	Bearing	27/09/2016	
101	24850104	2	Conical Roller Bearing 32009-X	27/09/2016	
102	24813500.77	2	HELICOil	27/09/2016	
103	24813500.130	3	Helicoil	27/09/2016	
11	24813500.67	2	Spacer	27/09/2016	
12	24850108	2	Shim Adjusting	27/09/2016	
13	24813500.15	2	Spacer	27/09/2016	
14	24813500.113	2	Spacer	27/09/2016	
15	24813500.81	3	Spacer	27/09/2016	
16	24813500.85	1	Spacer	27/09/2016	
18	24860217	2	Spacer	27/09/2016	
20	24813500.12	1	Spring	27/09/2016	
22	24813500.114	1	Shaft, Output	27/09/2016	
23	24813500.17	1	Shaft	27/09/2016	
24	24813500.60	1	Shaft	27/09/2016	
27	24860006	1	ATF Oil Plate	27/09/2016	
30	24813500.23	1	Cover	27/09/2016	
32	24813500.115	2	Bearing Support	27/09/2016	
35	24813500.61	1	Ring	27/09/2016	
36	24813500.09	2	Nut	27/09/2016	
37	24813500.24	1	Nut	27/09/2016	
39	24813500.76	1	Bushing	27/09/2016	
42	24813500.87	1	Plug,oil drain	27/09/2016	
44	24813500.21	1	Impeller	27/09/2016	
45	24813500.02	1	Cone Clutch	27/09/2016	
46	24813500.117	2	Gear	27/09/2016	
47	24813500.118	1	Gear	27/09/2016	
48	24813500.119	1	Pinion	27/09/2016	
49	24813500.120	1	Shaft Coupling	27/09/2016	
51	24813500.122	2	Washer	27/09/2016	
52	24813500.70	1	Nut	27/09/2016	
55	24813500.05	2	Ring,Bearing	27/09/2016	

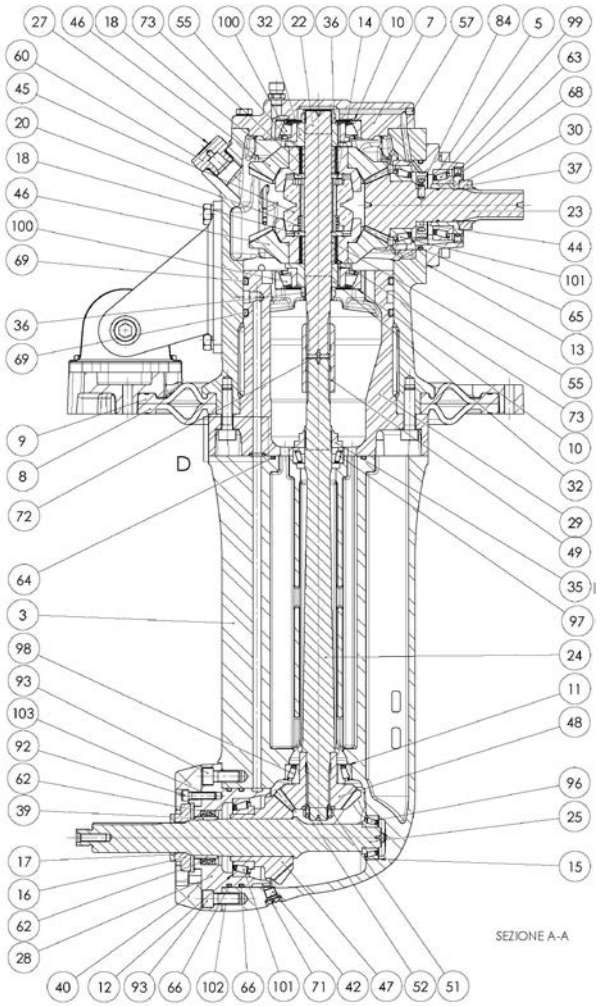

D_5037_8			Sheet 3/4 SP60 S.Drive V2		
FIG.	REF.	QTY	DESCR.	FROM	UPTO
57	24810326	1	Plug	27/09/2016	
60	24813500.125	1	Plug	27/09/2016	
62	24813500.79	2	Oil Seal	27/09/2016	
63	24813500.25	1	Oil Seal	27/09/2016	
64	24813500.65	1	O-Ring	27/09/2016	
65	24813500.16	1	O-Ring	27/09/2016	
66	24813500.80	2	O-Ring D. 90X3,5	27/09/2016	
68	24813500.18	1	O-Ring	27/09/2016	
69	24813500.46	2	O-Ring	27/09/2016	
71	24813500.86.1	1	O-Ring	27/09/2016	
72	24813500.64	1	CIRClip	27/09/2016	
73	24813500.06	4	Bearing, needle	27/09/2016	
84	24813500.128	1	Pin	27/09/2016	
92	24813500.91	3	Screw	27/09/2016	
93	24813500.83	2	Screw	27/09/2016	
96	24813500.82	1	Bearing	27/09/2016	
97	24860206	1	Conical Roller Bearing 32005	27/09/2016	
98	24813500.66	1	Bearing	27/09/2016	
99	24813500.22	1	Bearing	27/09/2016	

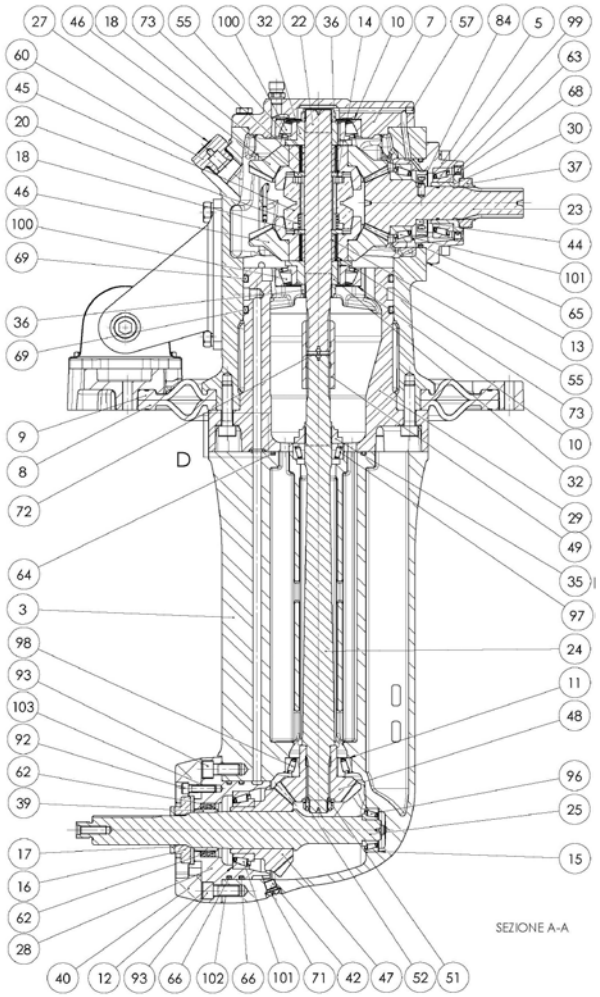

SP60 S.Drive

D_5037_9			Sheet 4/4 SP60 S.Drive V2		
FIG.	REF.	QTY	DESCR.	FROM	UPTO
105	24813500.99	1	Nut [NP]	27/09/2016	
19	24860411	1	Spring	27/09/2016	
21	24860402	1	Shaft	27/09/2016	
26	24850005	1	Plate, IDENTIFICATION	27/09/2016	
33	24860419	1	Pin	27/09/2016	
43	24860423	1	PAD	27/09/2016	
53	24860409	1	Screw	27/09/2016	
61	24860404	1	Oil Seal	27/09/2016	
67	24860417	1	O-Ring	27/09/2016	
70	24813500.47	1	O-Ring	27/09/2016	
78	24813500.97	2	Washer DIN 125-14 [NP]	27/09/2016	
81	24813500.127	8	Washer	27/09/2016	
83	24860418	1	Pin DIN 1481 3-20 [NP]	27/09/2016	
85	24813500.89	4	Bolt DIN 933 M6-10 8.8 [NP]	27/09/2016	
86	24813500.129	4	Screw	27/09/2016	
91	24813500.98	1	Bolt	27/09/2016	
95	24813500.49	8	Screw	27/09/2016	

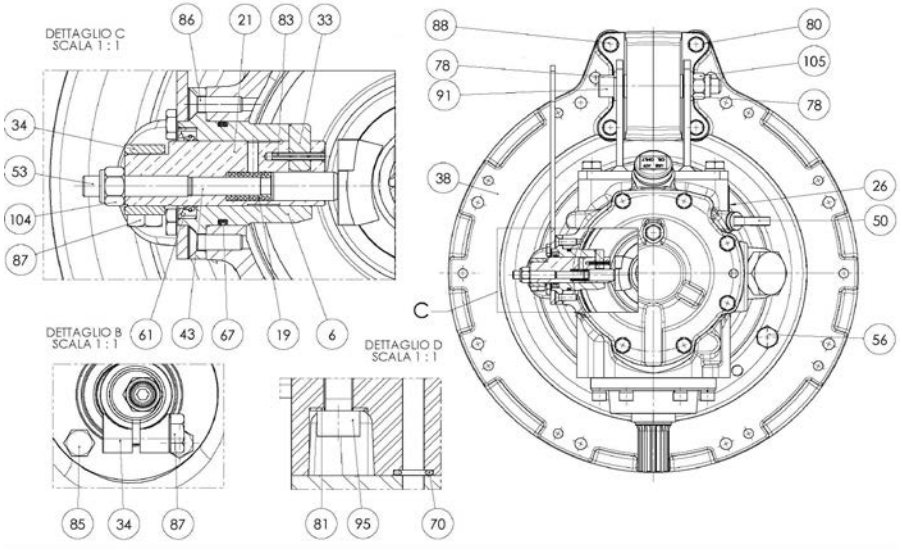

[NP] Not provided

	D_5037_5		Maintenance Kit		
FIG.	REF.	QTY	DESCR.	FROM	UPTO
1	24813401	1	Kit Gasket		
2	A0201000	3	ATF Sole Diesel Oil 1L		
NS	24813500.84	1	Anode SP60 [NS]		

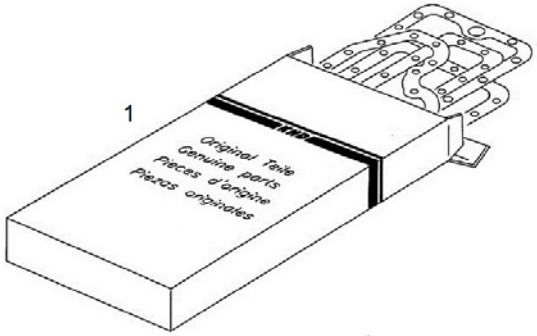

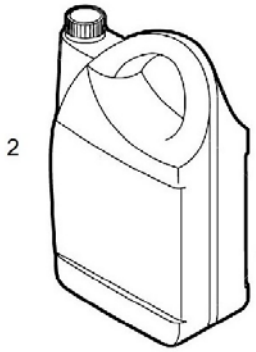

[NS] Not shown

TM-345 Gearbox

D_5023_1			Sheet 1/4		
FIG.	REF.	QTY	DESCR.	FROM	UPTO
1	24850091	1	Screw		
2	24850092	3	Washer		
3	24850090	2	Washer		
4	24820068	3	Plug M8X1		
5	24820086	3	Washer 8-13-1,5 [NP]		
6	24810065	1	Plug		
7	24850008	1	Gauge Oil LEVEL		
26	24850028	11	Screw		
41	24810044	5	Bolt DIN 933 M6-16 8.8 [NP]		
56	24850005	1	Plate, IDENTIFICATION		
59	24810063	1	Plane Washer		
60	24850011	1	Plug,oil drain		
61	24850040	2	Bolt DIN 933 M6-25 8.8 [NP]		
62	24810047	1	Bolt DIN 933 M8-25 8.8 [NP]		
77	24810532	1	SWITCHER		
78	24810533	1	O-Ring D. 14X1,7		
79	24850527	1	Pin		

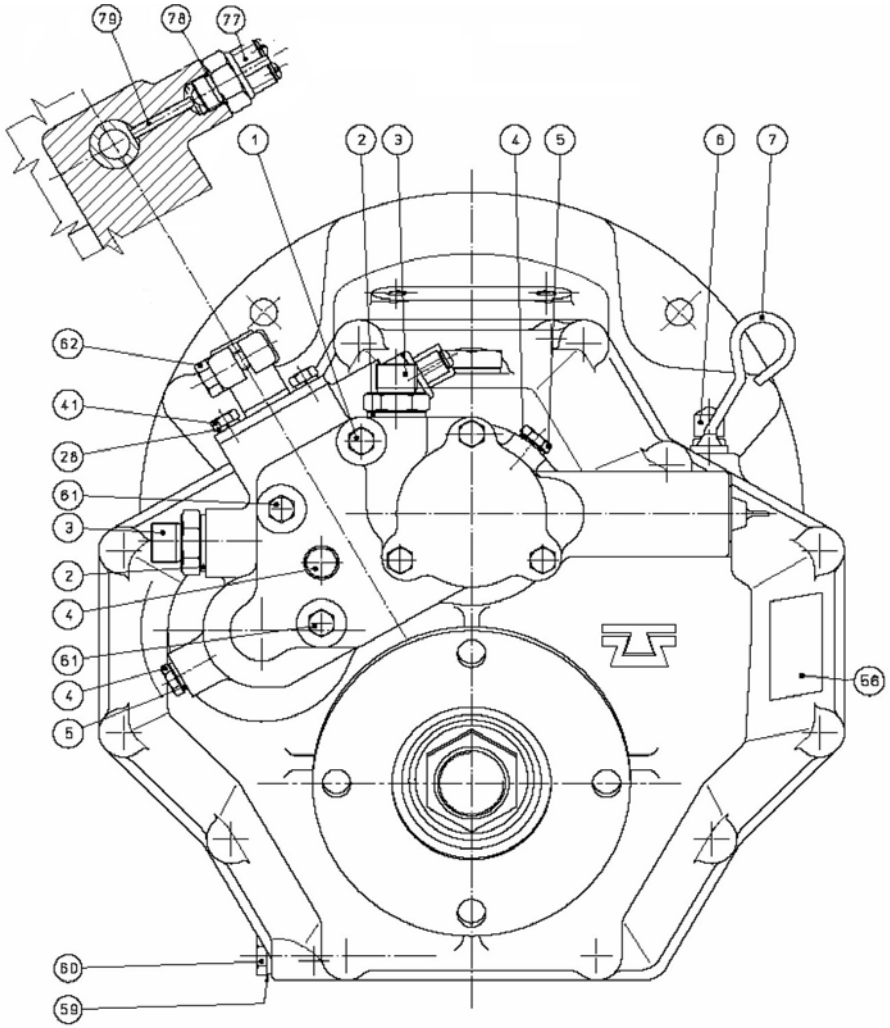

[NP] Not provided

TM-345 Gearbox

D_5023_2			Sheet 2/4		
FIG.	**REF.**	**QTY**	**DESCR.**	**FROM**	**UPTO**
33	24830113	1	Screw		

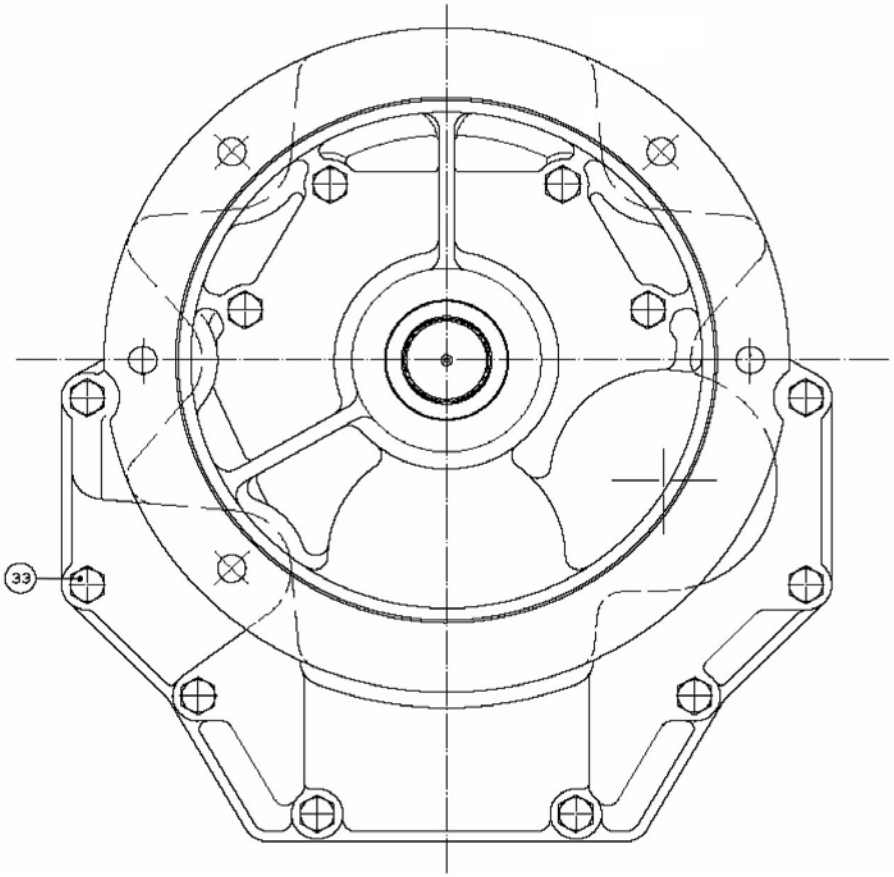

TM-345 Gearbox

	D_5023_3		Sheet 3/4		
FIG.	**REF.**	**QTY**	**DESCR.**	**FROM**	**UPTO**
8	24850323	2	Washer		
9-10	24850403	2	Clutch Plate Kit		
11	24850310	2	Ring		
12	24850307	2	Ring		
13	24850333	2	Spacer		
14	24850312	2	SEGER		
15A	24852203	1	Gear R. 1,54 TM 345		
15B	24853203	1	Gear R. 2 TM 345		
15C	24854203	1	Gear R. 2,47 TM 345		
16	24850012	1	Plug		
17	24850318	4	Ring		
18	24850306	4	Bearing, needle		
19	24850325	2	Washer		
20	24850308	2	Conical Roller Bearing 32305		
21	24850328	4	Washer		
22	24810326	2	Plug		
23	24850016	1	Bushing		
24	24850020	1	PUMB Box		
25	24850015	1	Pump Cover		
27	24850029	3	Screw		
28	24810042	9	Washer GROWER DIN 127-6 [NP]		
29	24850095	1	Gear, Pump Out		
30	24850094	1	Pump Shaft		
31	24850096	1	Gear, Pump INNER		
32	24850097	1	O-Ring D. 50X1,7		
34	24850099	1	Nut		
35	24850224A	1	Flange, Output TM-345A		
36	24840103	1	Grommet		
37	24850212	1	Conical Roller Bearing 30207A		
38	24850001A	1	Front Body TM-345A		
39A	24852210	1	Gear R. 1,54 TM 345		
39B	24853210	1	Gear R. 2 TM 345		
39C	24854210	1	Gear R. 2,47 TM 345		
40	24850013	2	Pin		
42	24850080	1	Plate Pipe		

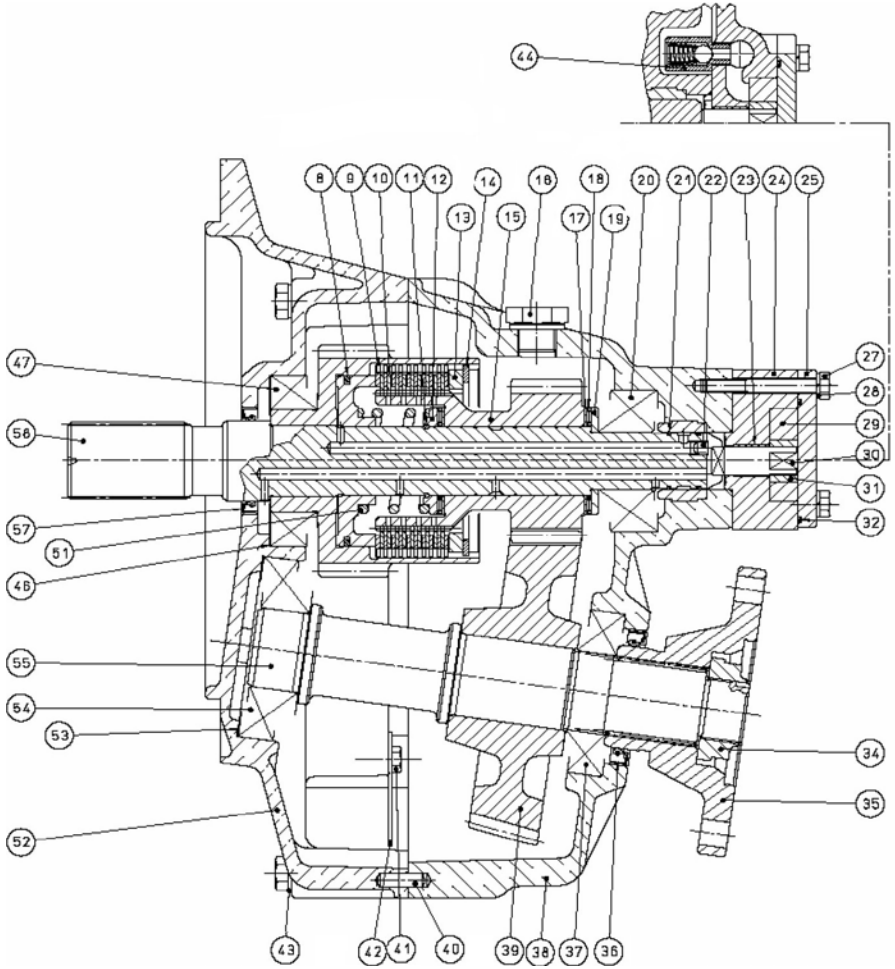

[NP] Not provided

TM-345 Gearbox

	D_5023_3		Sheet 3/4		
FIG.	**REF.**	**QTY**	**DESCR.**	**FROM**	**UPTO**
43	24850093	12	Washer		
44	24850063	1	By pass Valve		
46	24850108	6	Shim Adjusting		
47	24850104	2	Conical Roller Bearing 32009-X		
51	24850122	2	Spring		
52	24850207A	1	Cover TM-345A		
53	24810333	3	Spacer		
54	24850206	1	Conical Roller Bearing 31307A		
55	24850201	1	Output Shaft		
57	24810103S	1	Grommet, Oil SILICON		
58	24850101	1	Input Shaft		

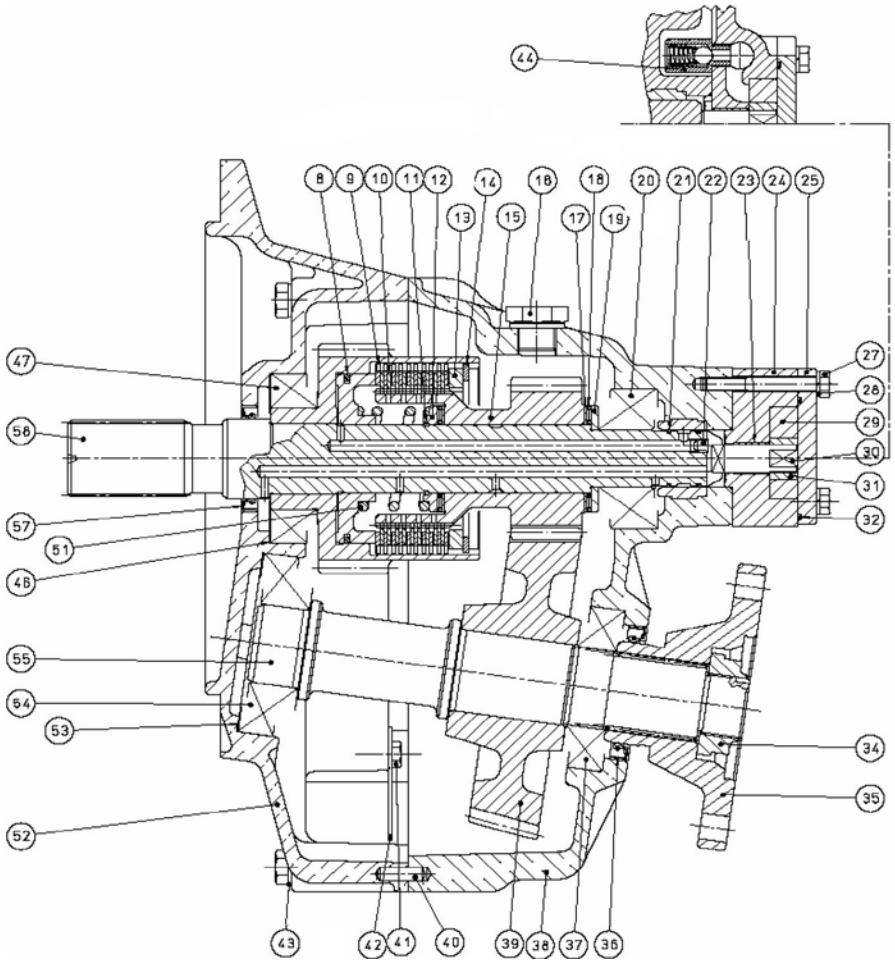

TM-345 Gearbox

D_5023_4			Sheet 4/4		
FIG.	REF.	QTY	DESCR.	FROM	UPTO
45A	24852203	1	Gear R. 1,54 TM 345		
45B	24853203	1	Gear R. 2 TM 345		
45C	24854203	1	Gear R. 2,47 TM 345		
48	24850124	2	Piston		
49	24850301	1	INTERMEDIATE Shaft		
50	24850330	1	Bell		
63	24810056	2	O-Ring D. 15,08X2,62 [NP]		
64	24850081	1	Aspiration Tube		
65	24810035	1	Oil Filter		
66	24850085	1	Pin		
67	24850059	1	O-Ring D. 50X5,3		
68	24850076	1	Spacer		
69	24850057	1	Nut		
70	24850030	1	Spring		
71	24810424	1	Lever		
72	24810041	1	Support		
73	24850062	1	Selector Valve		
74	24850052	1	Valve		
75	24850078	1	Spring		
76	24850079	1	Screw		

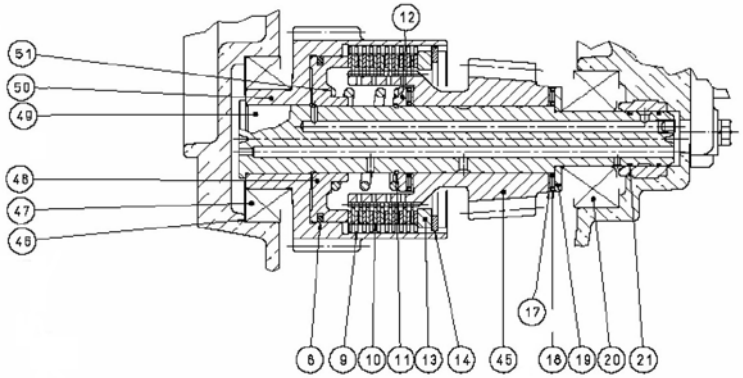

INTERMEDIATE SHAFT ASSEMBLY

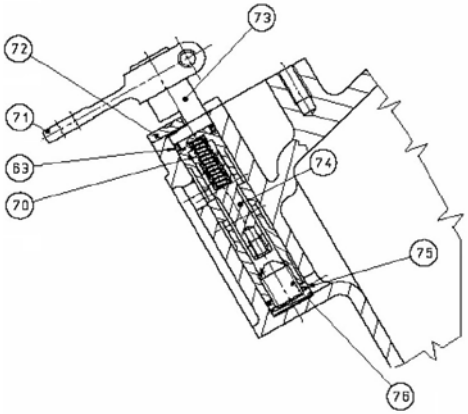

SELECTOR VALVE ASSEMBLY

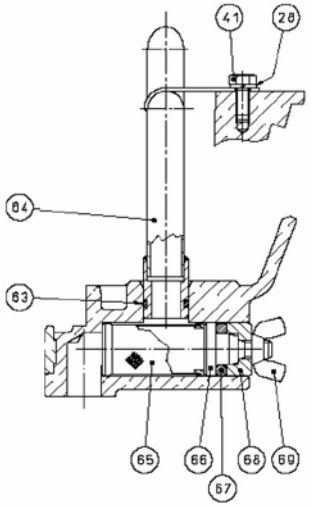

OIL FILTER ASSEMBLY

[NP] Not provided

TM-345 Gearbox

	D_5023_5		Maintenance Kit		
FIG.	**REF.**	**QTY**	**DESCR.**	**FROM**	**UPTO**
1	24850401	1	Kit Gasket		
2	A0105000	1	15W40 Sole Diesel Oil 5L		
3	24850403	2	Clutch Plate Kit		

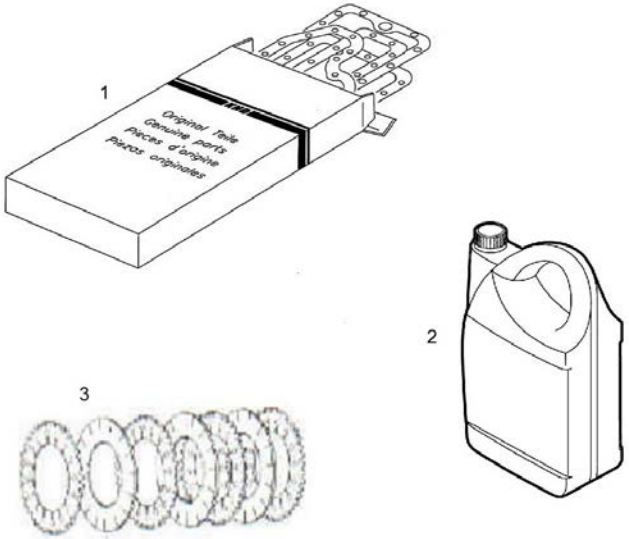

TM-345A Gearbox

D_5024_1			Sheet 1/4		
FIG.	REF.	QTY	DESCR.	FROM	UPTO
1	24850091	1	Screw		
2	24850092	3	Washer		
3	24850090	2	Washer		
4	24820068	3	Plug M8X1		
5	24820086	3	Washer 8-13-1,5 [NP]		
6	24810065	1	Plug		
7	24850008	1	Gauge Oil LEVEL		
26	24850028	11	Screw		
41	24810044	5	Bolt DIN 933 M6-16 8.8 [NP]		
56	24850005	1	Plate, IDENTIFICATION		
59	24810063	1	Plane Washer		
60	24850011	1	Plug,oil drain		
61	24850040	2	Bolt DIN 933 M6-25 8.8 [NP]		
62	24810047	1	Bolt DIN 933 M8-25 8.8 [NP]		
77	24810532	1	SWITCHER		
78	24810533	1	O-Ring D. 14X1,7		
79	24850527	1	Pin		

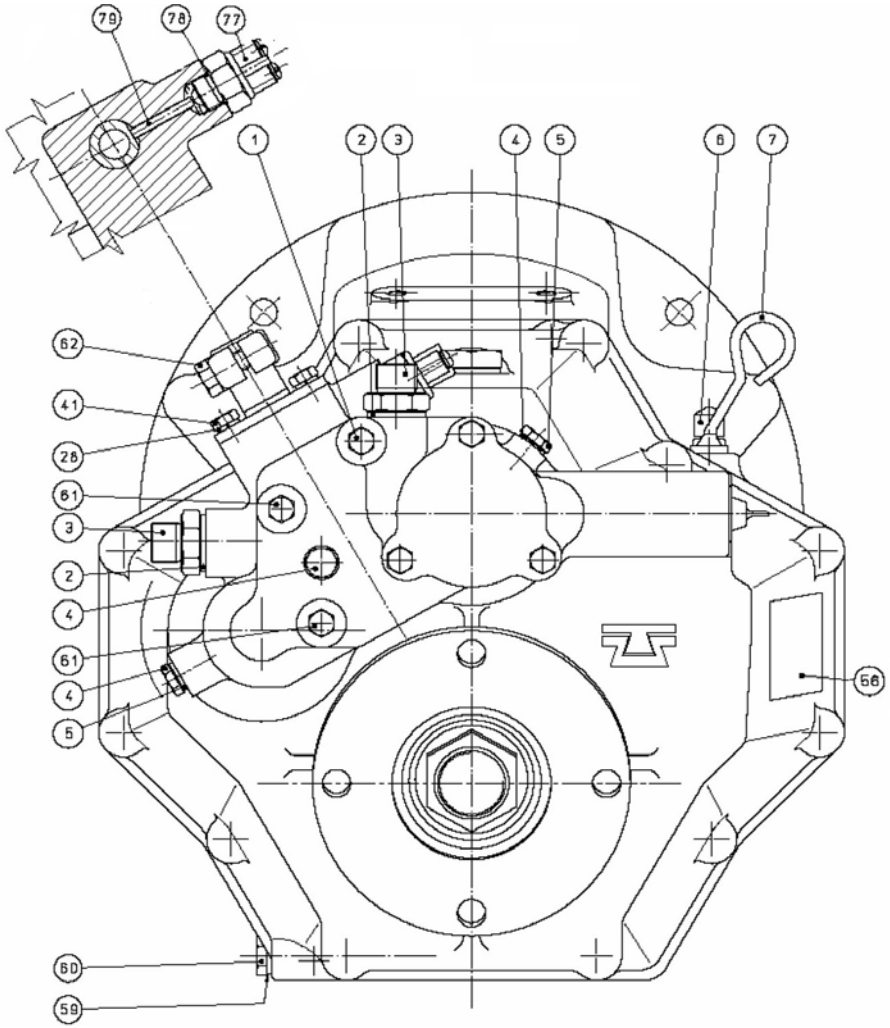

[NP] Not provided

TM-345A Gearbox

	D_5024_2		Sheet 2/4		
FIG.	**REF.**	**QTY**	**DESCR.**	**FROM**	**UPTO**
33	24830113	1	Screw		

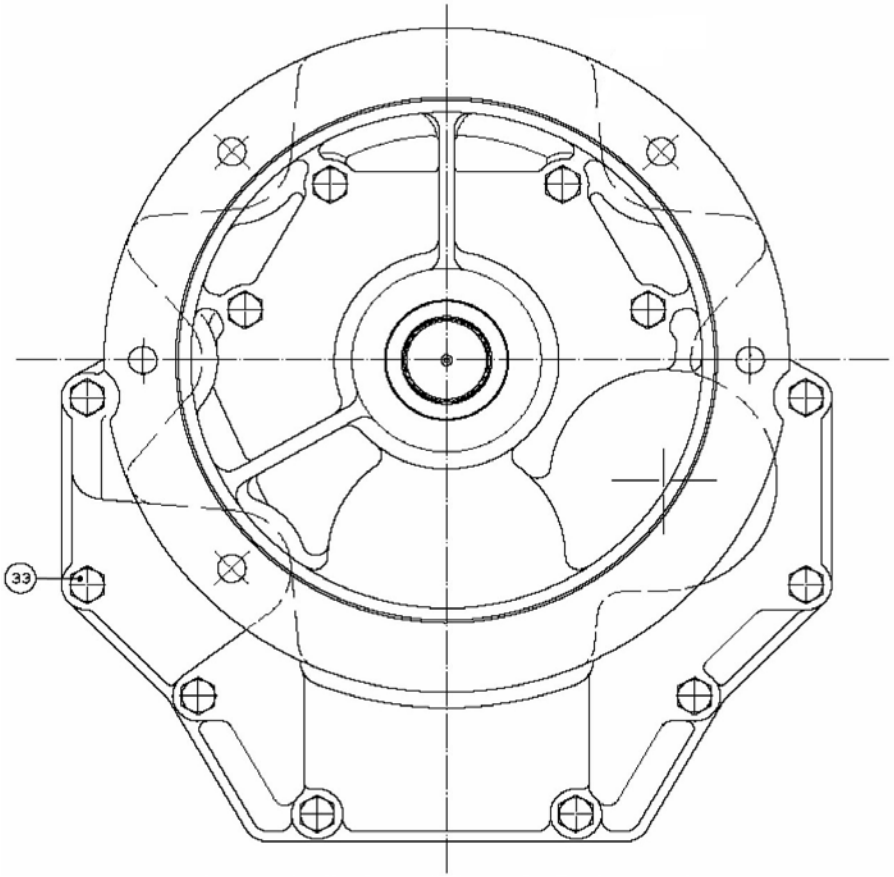

TM-345A Gearbox

	D_5024_3		Sheet 3/4		
FIG.	REF.	QTY	DESCR.	FROM	UPTO
8	24850323	2	Washer		
11	24850310	2	Ring		
12	24850307	2	Ring		
13	24850333	2	Spacer		
14	24850312	2	SEGER		
15A	24852203A	1	Gear R. 1,54 TM 345A		
15B	24853203A	1	Gear Red. 2 TM 345A		
15C	24854203A	1	Gear R. 2,47 TM 345A		
16	24850012	1	Plug		
17	24850318	4	Ring		
18	24850306	4	Bearing, needle		
19	24850325	2	Washer		
20	24850308	2	Conical Roller Bearing 32305		
21	24850328	4	Washer		
22	24810326	2	Plug		
23	24850016	1	Bushing		
24	24850020	1	PUMB Box		
25	24850015	1	Pump Cover		
27	24850029	3	Screw		
28	24810042	9	Washer GROWER DIN 127-6 [NP]		
29	24850095	1	Gear, Pump Out		
30	24850094	1	Pump Shaft		
31	24850096	1	Gear, Pump INNER		
32	24850097	1	O-Ring D. 50X1,7		
34	24850099	1	Nut		
35	24850224A	1	Flange, Output TM-345A		
36	24840103	1	Grommet		
37	24850212	1	Conical Roller Bearing 30207A		
38	24850001A	1	Front Body TM-345A		
39A	24852210A	1	Gear R. 1,54 TM 345A		
39B	24853210A	1	Gear R. 2 TM 345A		
39C	24854210A	1	Gear R. 2,47 TM 345A		
40	24850013	2	Pin		
42	24850080	1	Plate Pipe		
43	24850093	12	Washer		

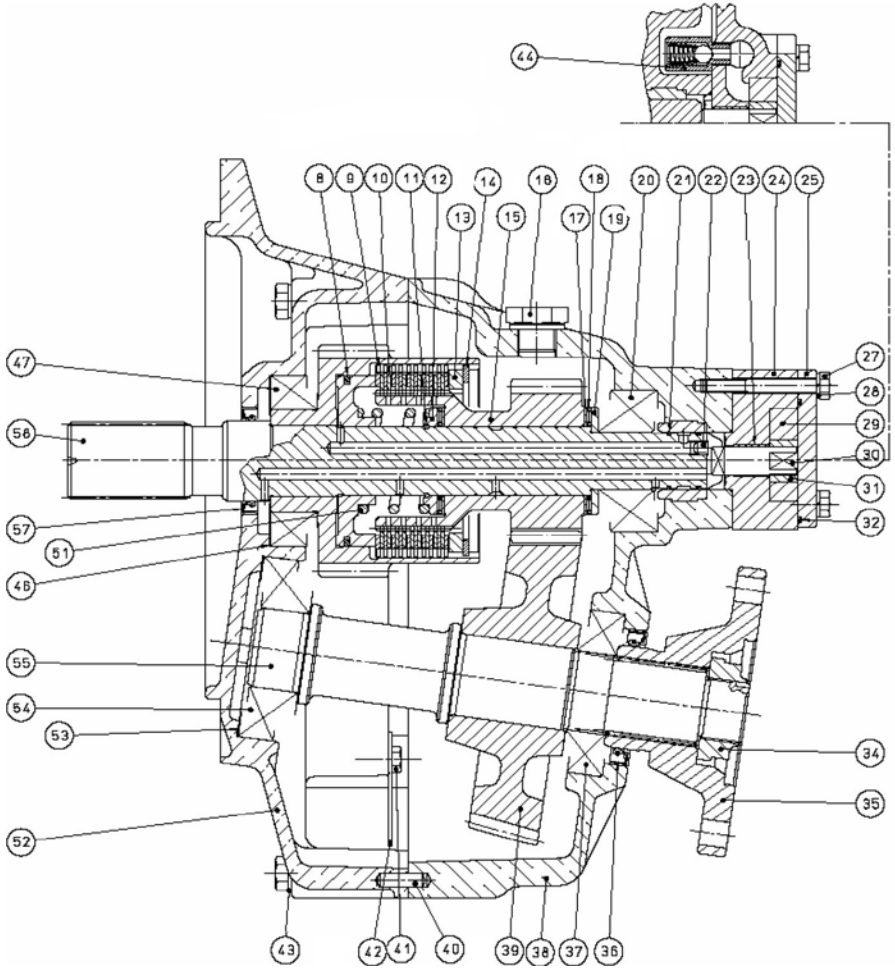

[NP] Not provided

TM-345A Gearbox

	D_5024_3		Sheet 3/4		
FIG.	**REF.**	**QTY**	**DESCR.**	**FROM**	**UPTO**
44	24850063	1	By pass Valve		
46	24850108	6	Shim Adjusting		
47	24850104	2	Conical Roller Bearing 32009-X		
51	24850122	2	Spring		
52	24850207A	1	Cover TM-345A		
53	24810333	3	Spacer		
54	24850206	1	Conical Roller Bearing 31307A		
55	24850201	1	Output Shaft		
57	24810103S	1	Grommet, Oil SILICON		
58	24850101	1	Input Shaft		

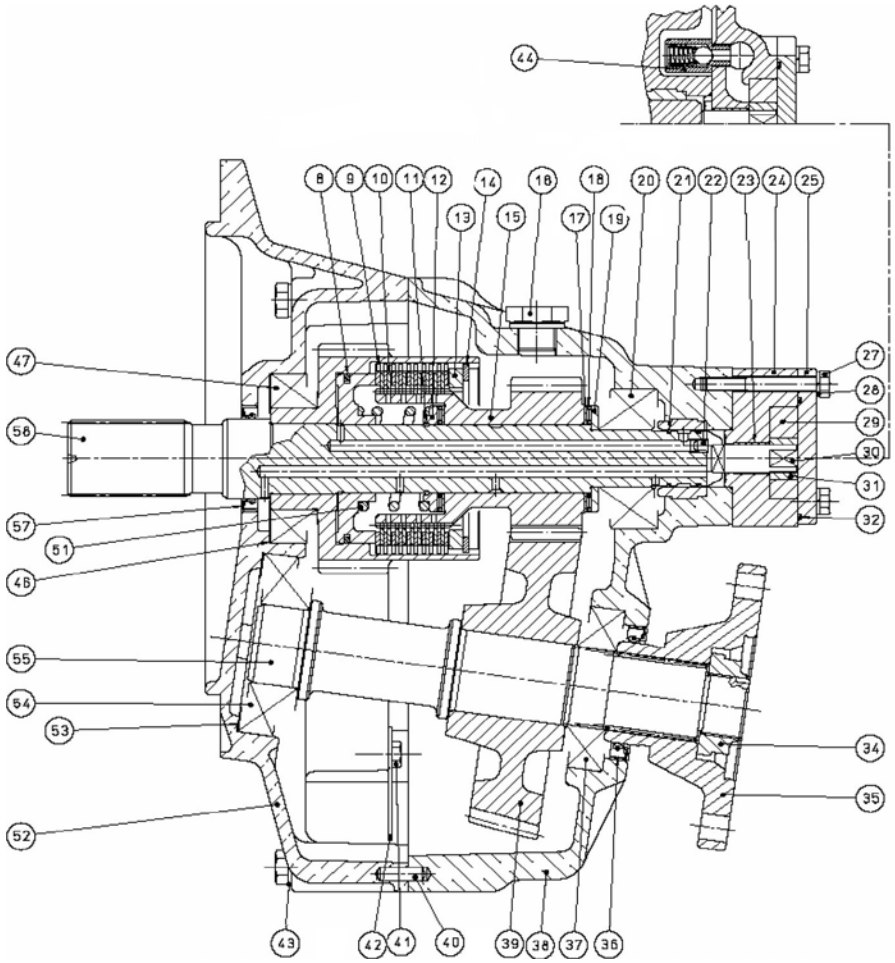

TM-345A Gearbox

	D_5024_4		Sheet 4/4		
FIG.	REF.	QTY	DESCR.	FROM	UPTO
45A	24852302	1	Gear R. 1,54 TM 345A		
45B	24853302	1	Gear R. 2 TM 345A		
45C	24854302	1	Gear R. 2,47 TM 345A		
48	24850124	2	Piston		
49	24850301	1	INTERMEDIATE Shaft		
50	24850330	1	Bell		
63	24810056	2	O-Ring D. 15,08X2,62 [NP]		
64	24850081	1	Aspiration Tube		
65	24810035	1	Oil Filter		
66	24850085	1	Pin		
67	24850059	1	O-Ring D. 50X5,3		
68	24850076	1	Spacer		
69	24850057	1	Nut		
70	24850030	1	Spring		
71	24810424	1	Lever		
72	24810041	1	Support		
73	24850062	1	Selector Valve		
74	24850052	1	Valve		
75	24850078	1	Spring		
76	24850079	1	Screw		

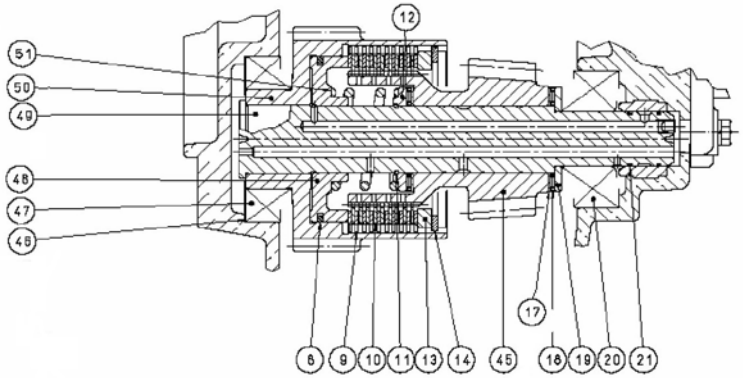

INTERMEDIATE SHAFT ASSEMBLY

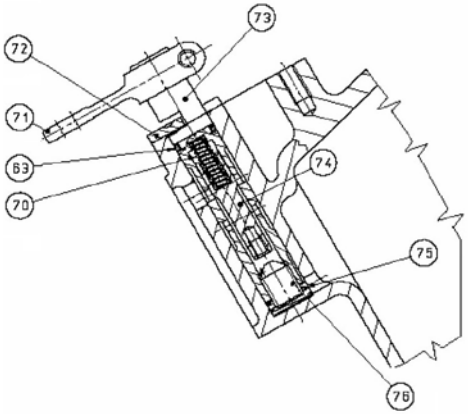

SELECTOR VALVE ASSEMBLY

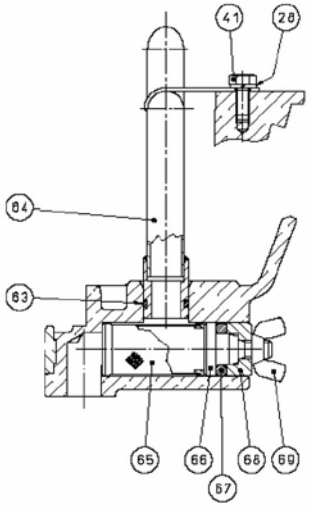

OIL FILTER ASSEMBLY

[NP] Not provided

TM-345A Gearbox

	D_5023_5		Maintenance Kit		
FIG.	**REF.**	**QTY**	**DESCR.**	**FROM**	**UPTO**
1	24850401	1	Kit Gasket		
2	A0105000	1	15W40 Sole Diesel Oil 5L		
3	24850403	2	Clutch Plate Kit		

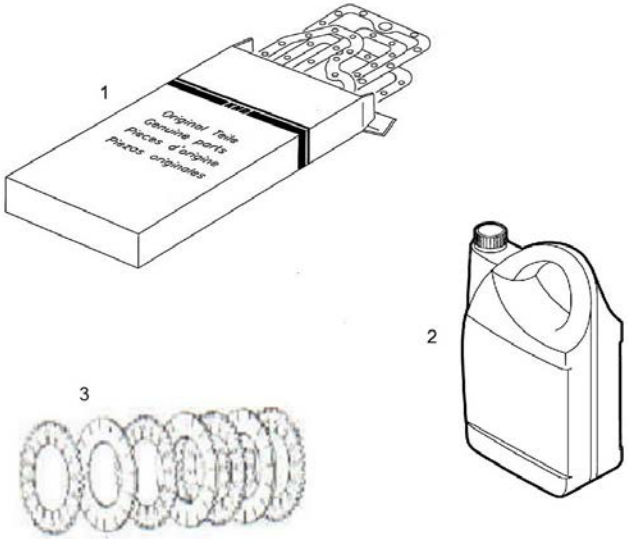

Gearbox TM-93

D_5030_1.1			Sheet 1.1/4		
FIG.	REF.	QTY	DESCR.	FROM	UPTO
100	24810103S	1	Grommet, Oil SILICON		
106	24830008	1	ROD, LEVEL Oil		
107	24810001	1	Front Body TM 93		
108	24810080	1	Plate Pipe [NP]		
109	24810081	1	ASPIRATION Tube [NP]		
110	24810082	2	Bolt DIN 933 M8-10 8.8 [NP]		
113	24810085	2	Pin		
114	24810002	1	Reverse Body TM 93		
117	24810088	1	Washer 14-20-1,5 [NP]		
118	24810011	1	Plug,oil drain		
119	24810089	1	Screw		
120	24810090	1	Cover		
125	24810214	1	Oil Grommet		
126	24810224	1	Flange, Output		
127	24810219	1	BUTT Washer		
128	24840220	1	Pin		
129	24810221	1	Washer GROWER DIN 127-14 [NP]		
130	24810222	1	Bolt DIN 933 M14X40 12.9		
131	24810095	1	Gear, ConductOR		
132	24810096	1	Gear, Conduct		
134	24810098	3	Screw		
NS	24810043	1	Pump Assy Oil [NS]		

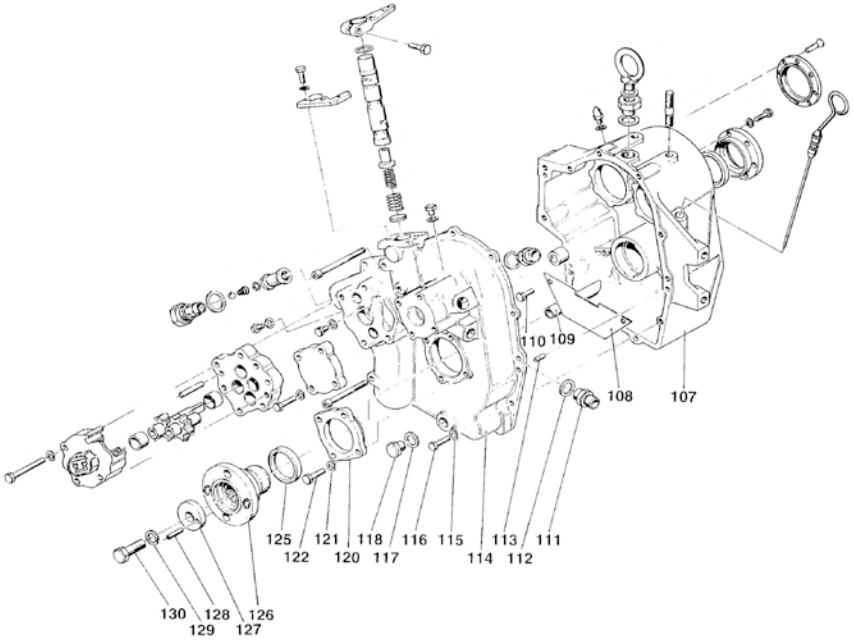

[NP] Not provided
[NS] Not shown

Gearbox TM-93

D_5030_1.2			Sheet 1.2/4		
FIG.	REF.	QTY	DESCR.	FROM	UPTO
119	24810089	1	Screw		
123	53033008	4	Washer GROWER DIN 127-8		
124	52102258	4	Bolt DIN 933 M8-25 8.8		
131	24810095	1	Gear, ConductOR		
132	24810096	1	Gear, Conduct		
58	24810013	4	Bolt DIN 931 M8-65 8.8 [NP]		
59	24810014	4	Washer GROWER DIN 127-8 [NP]		
61	24810025	2	Bushing		
63	24820023.1	2	Pin		
64	24810024	1	Plug, Oil Filter DRAIN		
67	24810027	1	Washer		
68	24810028	1	Screw		
69	18024143	1	Ball,steel 1/2"		
70	24810030	1	Valve Spring		
71	24810032	1	SNAP Ring		
72	24810035	1	Oil Filter		
73	24810036	2	Washer		
74	24810038	1	Cover		
76	24810040	1	Screw		

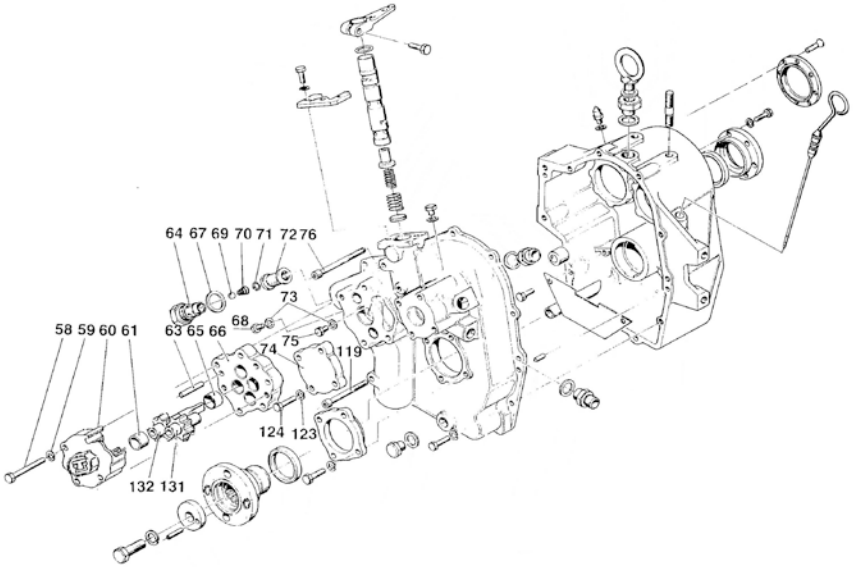

[NP] Not provided

Gearbox TM-93

D_5030_1.3			Sheet 1.3/4		
FIG.	REF.	QTY	DESCR.	FROM	UPTO
100	24810103S	1	Grommet, Oil SILICON		
101	24810072	1	Cover		
102	53033008	6	Washer GROWER DIN 127-8		
103	52102258	6	Bolt DIN 933 M8-25 8.8		
104	24810075	1	Cover		
105	24810076	8	Screw		
106	24830008	1	ROD, LEVEL Oil		
77	24810041	1	Support		
78	24810042	2	Washer GROWER DIN 127-6 [NP]		
79	24810044	2	Bolt DIN 933 M6-16 8.8 [NP]		
80	24810056	1	O-Ring D. 15,08X2,62 [NP]		
81	24810424	1	Lever		
82	24810047	1	Bolt DIN 933 M8-25 8.8 [NP]		
83	24810051	1	Distributor		
84	24810052	1	Valve		
85	24810053	1	Spring, Valve INNER		
86	24810054	1	Spring, Valve		
87	24810055	1	Expansion Plug		
88	24810028	1	Screw		
89	24810036	1	Washer		
90	24810059	1	Plane Washer		
91	24810060	1	Racord		
92	24810062	1	Valve BY PASS [NP]		
93	24810063	2	Plane Washer		
94	24810065	1	Plug		
96	24810012	1	Nut		
97	24810068	1	Plug		
98	56000083	1	Washer 21-26-1,5		
99	24810071	2	Stud		

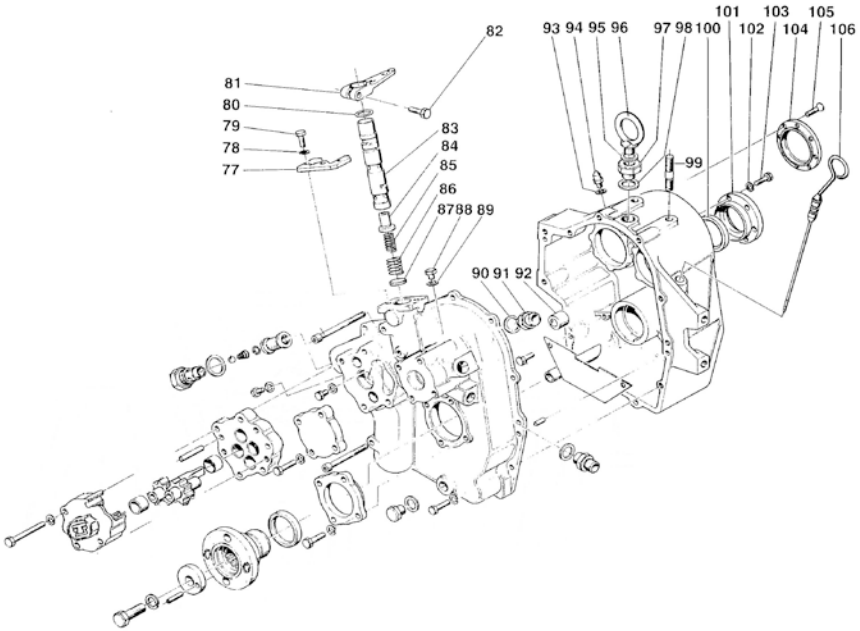

[NP] Not provided

Gearbox TM-93

D_5030_2			Intermediate Shaft 2/4		
FIG.	REF.	QTY	DESCR.	FROM	UPTO
1	24870207	1	Bearing		
2	24810307	1	Washer		
3	24810309	1	Roller		
4	24810310	1	Ring		
5A	24812302	1	Gear R. 1,5 TM 93		
5B	24813302	1	Gear R. 2 TM 93		
5C	24814302	1	Gear R. 2,4 TM 93		
5D	24815302	1	Gear R. 2,8 TM 93		
6	24810312	1	SNAP Ring		
7	24810313	1	Ring		
8	24810314	1	Grommet		
9	24810315	10	Disk		
10	24810316	9	Disk		
11	24810317	1	BushING		
12	24870118	1	THRUST RACE		
13	24810309	1	Roller		
14	24870318	1	THRUST RACE		
15	24810322	1	Spring		
16	24810323	1	Washer		
17	24810324	1	Piston		
18	24810325	1	Washer		
19	24810326	1	Plug		
20	24810301	1	INTERMEDIATE Shaft		
21	24810328	2	Washer		
22	24810329	1	KEY		
23	24810330	1	Bell		
24	24870206	1	Bearing		
25	24810333	0	Spacer [VAR]		
26	24810334	1	Plug		

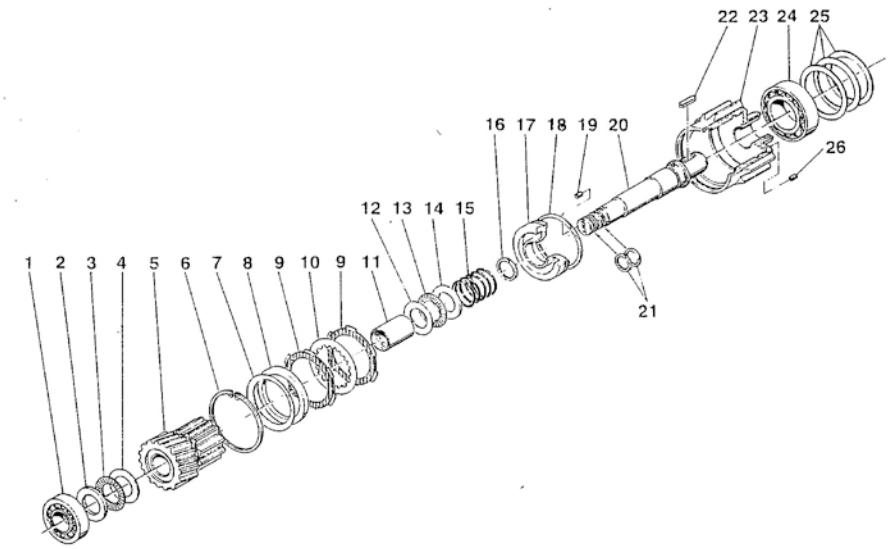

[VAR] Variable according to repair

Gearbox TM-93

	D_5030_3		Input Shaft 3/4		
FIG.	REF.	QTY	DESCR.	FROM	UPTO
27	24870207	1	Bearing		
28	24810307	1	Washer		
29	24810309	1	Roller		
30	(*)	1	Not available [NP]		
31A	24812302	1	Gear R. 1,5 TM 93		
31B	24813302	1	Gear R. 2 TM 93		
31C	24814302	1	Gear R. 2,4 TM 93		
31D	24815302	1	Gear R. 2,8 TM 93		
32	24810312	1	SNAP Ring		
33	24810313	1	Ring		
34	24810314	1	Grommet		
35	24810315	10	Disk		
36	24810316	9	Disk		
37	24810317	1	BushING		
38	24870118	1	THRUST RACE		
39	24810309	1	Roller		
40	24870318	1	THRUST RACE		
41	24810322	1	Spring		
42	24810323	1	Washer		
43	24810324	1	Piston		
44	24810325	1	Washer		
45	24810328	2	Washer		
46	24810326	1	Plug		
47	24810101	1	Input Shaft		
48	24810330	1	Bell		
49	24810329	1	KEY		
50	24810334	1	Plug		
51	24870206	1	Bearing		

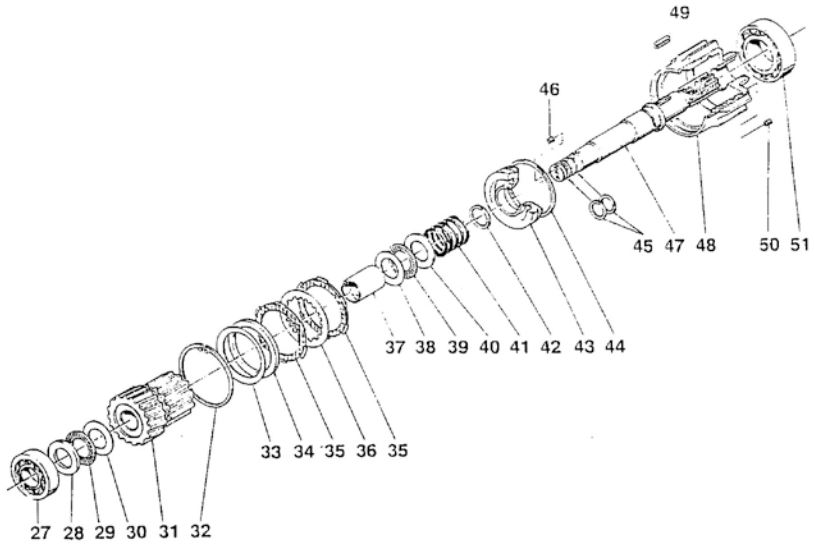

[NP] Not provided

Gearbox TM-93

	D_5030_4		Output Shaft 4/4		
FIG.	REF.	QTY	DESCR.	FROM	UPTO
52	24810206	1	Conical Roller Bearing 32208		
53/55	24815201C	1	Gear+Output Shaft Kit		
53/55	24813201C	1	Gear+Output Shaft Kit		
53/55	24812201C	1	Gear+Output Shaft Kit		
53/55	24814201C	1	Gear+Output Shaft Kit		
54	24810209	1	O-Ring D. 38X3,5		
57	24810212	1	Bearing		

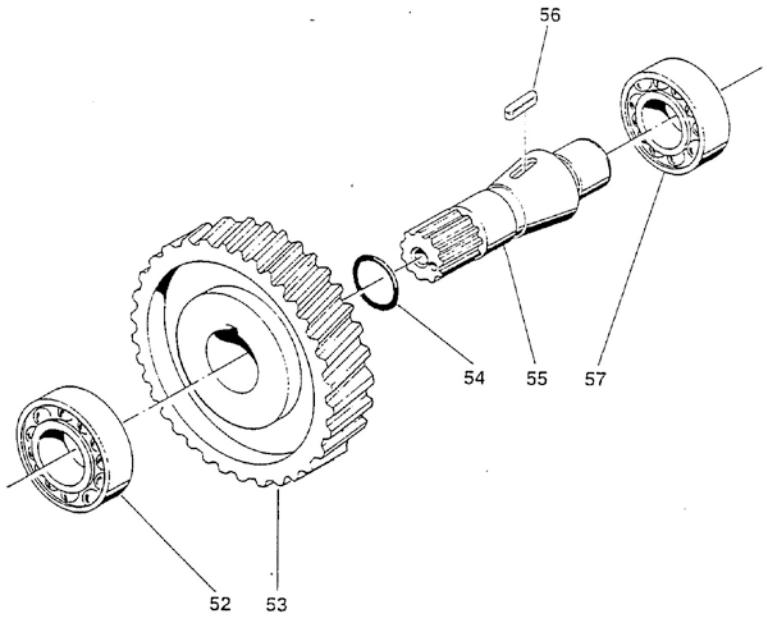

Gearbox TM-93

	D_5030_5		Maintenance Kit		
FIG.	**REF.**	**QTY**	**DESCR.**	**FROM**	**UPTO**
1	24810401	1	Kit Gasket		
2	A0105000	1	15W40 Sole Diesel Oil 5L		
3	24810403	2	Clutch Plate Kit		

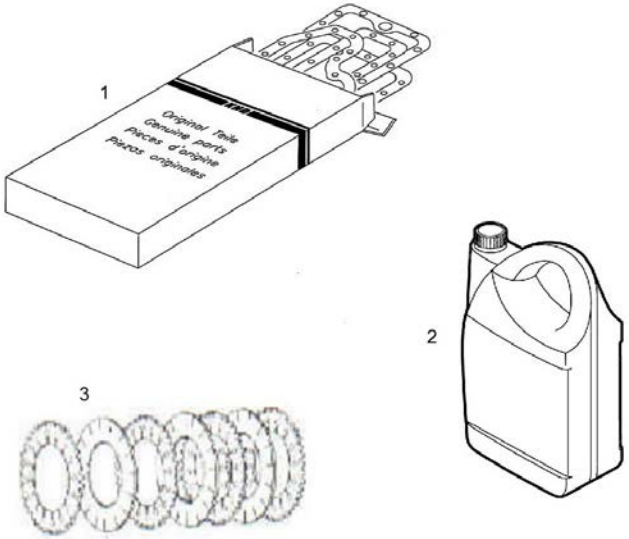

GearBox ZF-15 MIV

	D_50Z2_1		Sheet 1/2		
FIG.	**REF.**	**QTY**	**DESCR.**	**FROM**	**UPTO**
1	24610030	1	Housing Assy		
2	24610031	1	Cover		
3	24610032	1	Cover		
4	24610033	37	Spring Washer		
5	24610034	8	Hex Screw		
6A	24610401	1	Actuating Lever		
6B	24610402	1	Actuating Lever		
7A	24610403	1	Hex Head Screw		
7B	24610404	1	Cap Screw M8X40		
7C	24610405	1	Screw (Actuating Lever)		
8	24610406	1	Shaft Seal Ring		
9	24610407	1	Cover		
10	24610408	1	Dowel Pin		
11	24610409	1	Actuating Cam Assembly		
12	24610400	1	Shift Cover Assembly		
15	24610411	1	Shift Fork		
16	24610035	1	Shift Rod		
17	24610036	1	Plug		
18	24610037	1	Sealing Ring		
19	24610038	1	Dipstick		
20	24610039	1	Oil Drain Plug		
21	24610040	14	Hex Screw		
22	24610041	16	Hex Nut		
23	24610042	1	Plug		
24	24610301	1	Intermediate Shaft		
25	24610302	2	Disc		
26	24610303	1	Intermediate Gear		
27	24610304	1	Needle Bearing		
28	24610043	2	Gasket		
29	24610412	1	Gasket (or Loctite 518)		
87	24610410	2	Needle Bearing		
88	24610044	4	Stud		
89	24610045	4	Plug		
90	24610046	1	Name Plate		
91	24610047	1	Oil Name Plate		

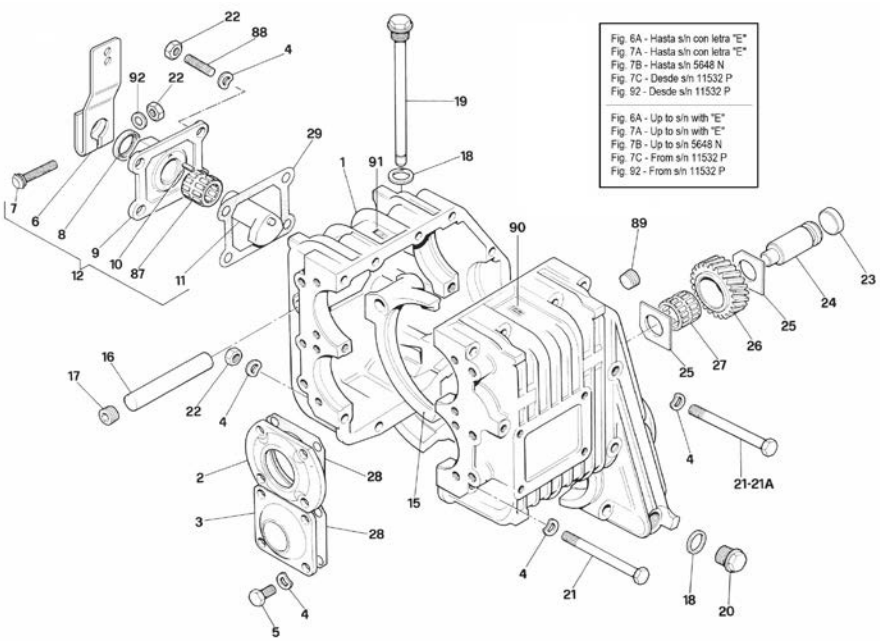

GearBox ZF-15 MIV

D_50Z2_1			Sheet 1/2		
FIG.	**REF.**	**QTY**	**DESCR.**	**FROM**	**UPTO**
92	24610413	1	Washer		

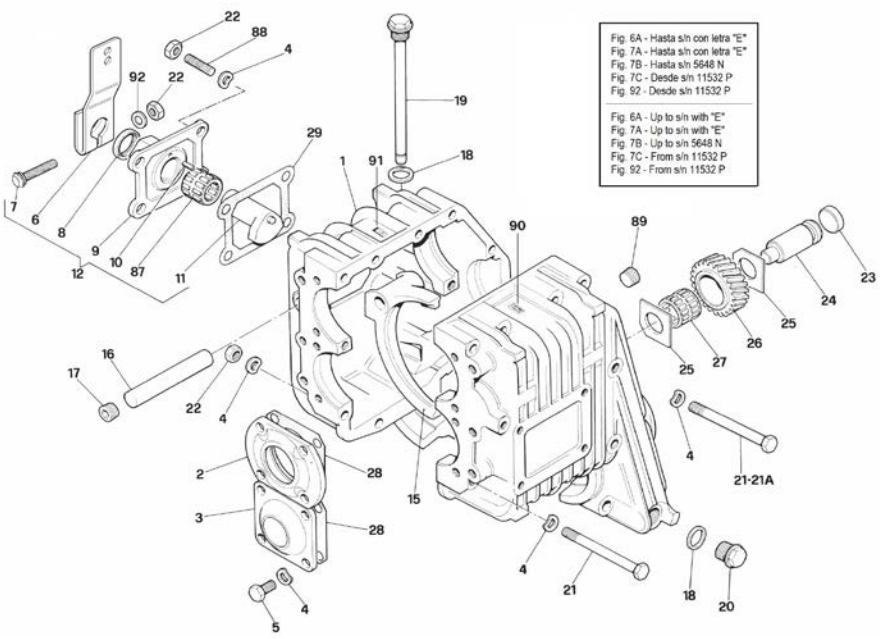

GearBox ZF-15 MIV

	D_50Z2_2		Sheet 2/2		
FIG.	**REF.**	**QTY**	**DESCR.**	**FROM**	**UPTO**
30	24613430	1	----------		
31	24613431	2	----------		
32	24610102	2	Tapered Roller Bearing		
34	24610305	1	Tapered Roller Bearing		
36A	24610103	1	Input Shaft Hbw 150 V 1.8R Z1/Z3=27/22		
36B	24610104	1	Input Shaft Zf 15 Miv 2.13R Z1/Z3=24/22		
36C	24610105	1	Input Shaft Zf 15 Miv 2.72R Z1/Z3=18/22		
36D	24610106	1	Input Shaft Zf 15 Miv 2.99R Z1/Z3=19/22		
37	24610107	2	Shim 0.10 mm		
38A	24610108	2	Shim 0.15 mm		
38B	24610109	2	Shim 0.20 mm		
38C	24610110	2	Shim 0.30 mm		
39	24610111	2	Shim 0.50 mm		
40	24610112	2	Shim 1.00 mm		
41	24610307	1	Hex Head Screw		
42	24610308	1	Spacer		
43	24610309	2	Thrust Ring		
44A	24610310	1	Gear Hbw 150 V - 1.8R «08» Z2=42		
44B	24610311	1	Gear Zf 15 Miv - 2.13R «001» Z2=45		
44C	24610312	1	Gear Zf 15 Miv - 2.72R «003» Z2=43		
44D	24610313	1	Gear Zf 15 Miv - 2.99R «002» Z2=50		
45	24610314	2	Needle Bearing		
46	24610315	2	Needle Bearing		
47	24610316	2	Spacer		
48	24610317	4	Spring		
49	24610318	2	Disc		
50	24610319	4	Ring Half		
51	24610320	8	Internal Clutch Disc		
52	24610321	8	External Clutch Disc		
53A	24610322	2	Shim 0.3 mm		
53B	24610323	2	Shim 0.4 mm		
54	24610324	2	Shim 0.5 mm		
55	24610325	2	Shim 0.6 mm		
56	24610326	2	Shim 0.7 mm		
57	24610327	2	Disc Carrier		

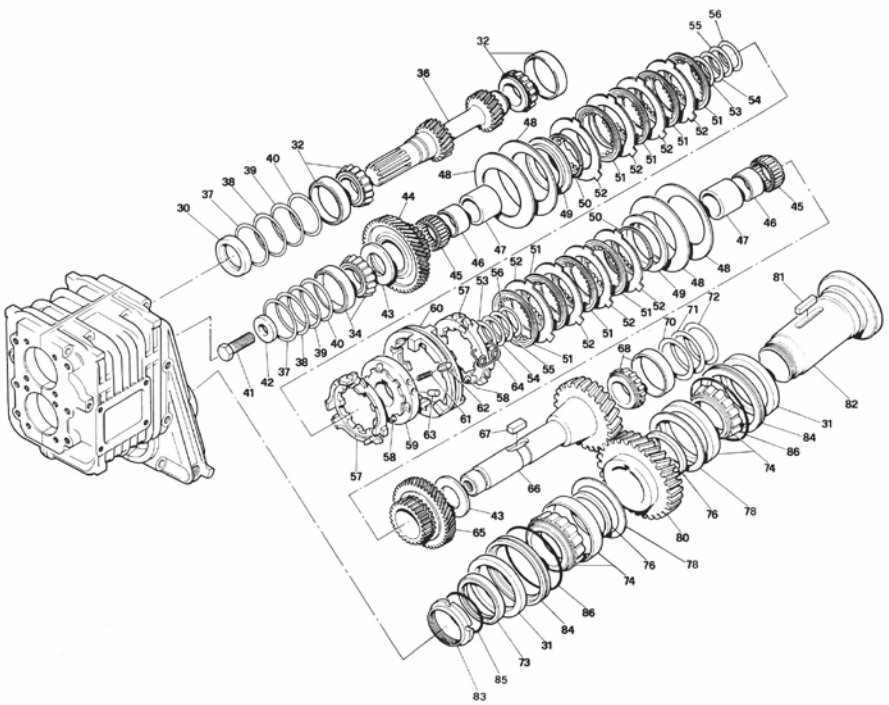

GearBox ZF-15 MIV

	D_50Z2_2		Sheet 2/2		
FIG.	REF.	QTY	DESCR.	FROM	UPTO
58	24610328	6	Ball		
59	24610329	1	Guide Sleeve		
60	24610330	1	Change Selector		
61	24610331	3	Pressure Spring		
62	24610332	3	Stop Pin		
63	24610333	3	Guide Pin		
64	24610334	3	Torsion Spring		
65	24610335	1	Gear Z5=43		
66	24610336	1	Intermediate Shaft Z6=29		
67	24610337	2	Cotter		
68	24610338	1	Tapered Roller Bearing		
70	24610339	2	Shim 0.1 mm		
71	24610340	1	Shim 0.3 mm		
72	24610341	1	Shim 0.5 mm		
73	24610202	1	Ring		
74	24610203	2	Tapered Roller Bearing		
76	24610204	2	Spacer Ring		
78A	24610205	2	Shim 1.1 mm		
78B	24610206	2	Shim 1.2 mm		
78C	24610207	2	Shim 1.3 mm		
78D	24610208	2	Shim 1.4 mm		
78E	24610209	2	Shim 1.5 mm		
78F	24610210	2	Shim 1.6 mm		
78G	24610211	2	Shim 1.7 mm		
78H	24610212	2	Shim 1.8 mm		
78I	24610213	2	Shim 1.9 mm		
78J	24610214	2	Shim 2.0 mm		
78K	24610215	2	Shim 2.1 mm		
78L	24610216	2	Shim 2.2 mm		
78M	24610217	2	Shim 2.3 mm		
78N	24610218	2	Shim 2.4 mm		
80	24610219	1	Gear Z=33		
81	24610220	1	Key		
82	24610221	1	Output Shaft		
83	24610222	1	Ring Nut		
84	24610223	2	Ring		
85	24610224	1	O-Ring		
####	24610225	2	O-Ring		

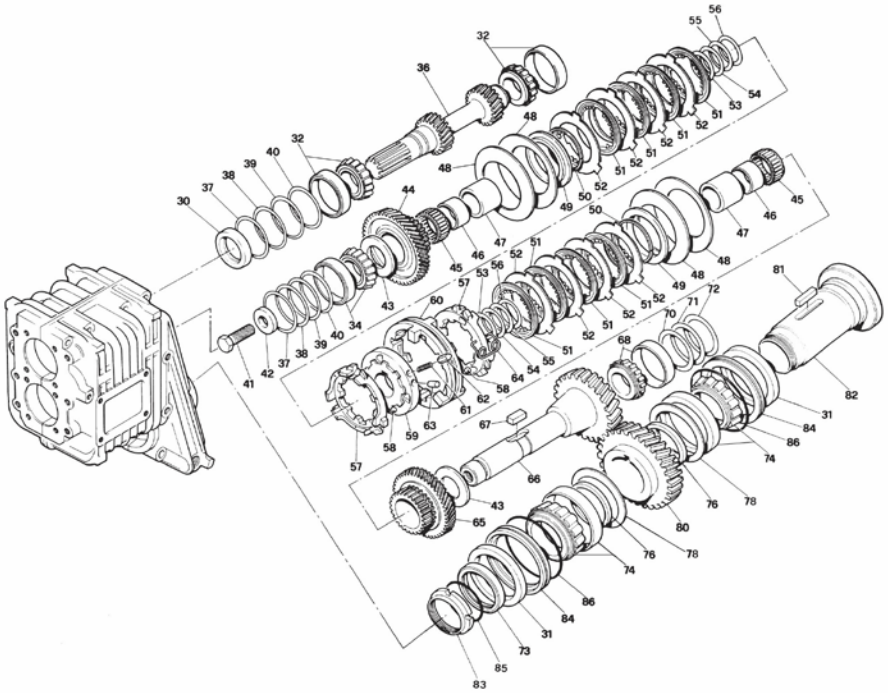

	17310012		Motor Bracket, Width 255		
FIG.	REF.	QTY	DESCR.	FROM	UPTO
1	17310006	2	Rear Bracket, Width 255		
2	17310004	1	Right Frontal Bracket, Width 255		
3	17310005	1	Left Frontal Bracket, Width 255		

Kit Gearbox

13410100			Kit S-Drive VOLVO 120SB/120SC/120SE		
FIG.	**REF.**	**QTY**	**DESCR.**	**FROM**	**UPTO**
1	13410041	1	Spacer		
2	53033006	12	Washer GROWER DIN 127-6		
3	52103161	6	Bolt DIN 912 M6-40 8.8		
4	13810042	1	Flexible Coupling Type F D. 175 VULKAN		
5	52103156	6	Bolt DIN 912 M6-16 8.8		
6	13410022	1	Adaptor Flange M-34		
7	53033012	2	Washer GROWER DIN 127-12		
9	53038012	3	Washer DIN 6798-A 12		
11	53033010	6	Washer GROWER DIN 127-10		
12	52101311	6	Bolt DIN 931 M10-40 8.8		
13	52202358	3	Bolt DIN 933 M12-1,25-25 8.8		
14	52102358	2	Bolt DIN 933 M12-25 8.8		
15	13814072	2	NIPPLE EYE		
16	57000361	2	Washer 10-14-1,5	01/06/2013	
17	13814070	1	Electric Fuel Feed Pump 12V		
18	51030006	2	Washer DIN 125-6		
19	52102154	2	Bolt DIN 933 M6-10 8.8		
20	51086015	1	One Ear Clamp With Interior Ring		
21	13814012	1	Pipe	25/09/2007	
NS	58088284	1	Pastic Cable Zip Tie [NS]	05/06/2014	
NS	60900126	1	TERMINAL [NS]		

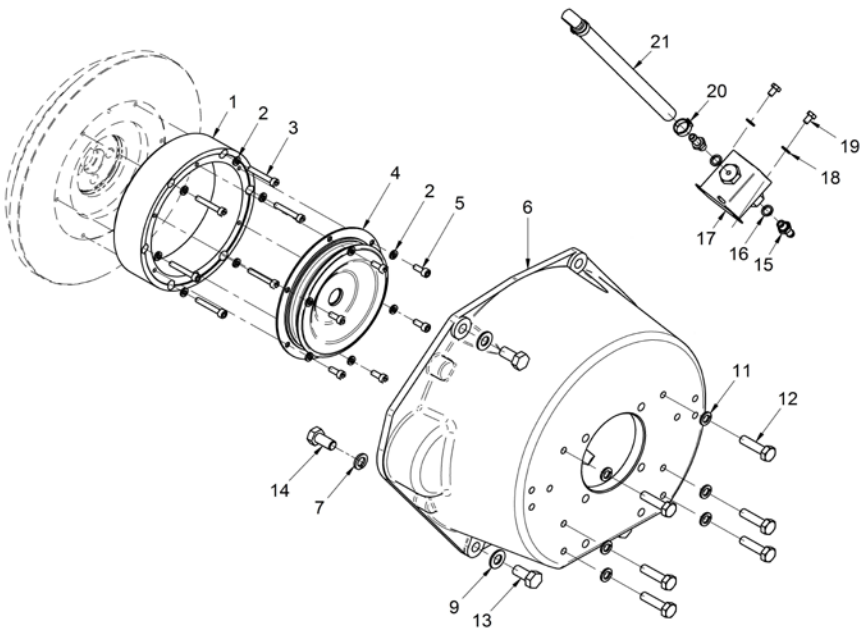

[NS] Not shown

Kit Gearbox

	17210107		Kit S-Drive VOLVO 110S		
FIG.	REF.	QTY	DESCR.	FROM	UPTO
1	13410018.2	1	----------		
2	13810013	1	Coupling,Drive		
3	53033006	8	Washer GROWER DIN 127-6		
4	52102160	6	Bolt DIN 933 M6-35 8.8		
5	51086015	1	One Ear Clamp With Interior Ring		
6	53033012	3	Washer GROWER DIN 127-12		
7	52202359	1	Bolt DIN 933 M12-1,25-30 8.8		
8	52202361	1	Bolt DIN 933 M12-1,25-40 8.8		
9	13810016	1	Spacer,VOLVO Stern Drive ADAP.110S		
10	53033010	12	Washer GROWER DIN 127-10		
11	52103309	6	Bolt DIN 912 M10-30 8.8		
12	52101311	6	Bolt DIN 931 M10-40 8.8		
13	52202358	3	Bolt DIN 933 M12-1,25-25 8.8		
14	53038012	4	Washer DIN 6798-A 12		
15	52102358	2	Bolt DIN 933 M12-25 8.8		
16	13814070	1	Electric Fuel Feed Pump 12V		
17	13814012	1	Pipe	25/09/2007	
18	13814072	2	NIPPLE EYE		
19	57000361	2	Washer 10-14-1,5	01/06/2013	
20	52102154	2	Bolt DIN 933 M6-10 8.8		
21	51030006	2	Washer DIN 125-6		
NS	60900126	1	TERMINAL [NS]		

[NS] Not shown

Kit Gearbox

17310100.1			Kit Z-Drive VOLVO 270/280/290 Z=10		
FIG.	**REF.**	**QTY**	**DESCR.**	**FROM**	**UPTO**
1	17322027.1MEC	1	----------		
2	17210071	1	Flexible Coupling Type B SAE 6"1/2		
3	53038008	6	Washer DIN 6798-A 8		
4	52102257	6	Bolt DIN 933 M8-20 8.8		
5	13410018	1	SAE 7,adaptor flange		
6	53033012	3	Washer GROWER DIN 127-12		
7	52202360	1	Bolt DIN 933 M12-1,25-35 8.8		
8	52202361	1	Bolt DIN 933 M12-1,25-40 8.8		
9	17210100.1R	1	Kit Z-Drive Volvo 270/280/290 Z=10		
10	53038010	6	Washer DIN 6798-A 10		
11	52102309	6	Bolt DIN 933 M10-30 8.8		
12	52202359	3	Bolt DIN 933 M12-1,25-30 8.8		
13	53038012	4	Washer DIN 6798-A 12		
14	52102358	2	Bolt DIN 933 M12-25 8.8		
15	13814072	2	NIPPLE EYE		
16	57000361	2	Washer 10-14-1,5		
17	13814070	1	Electric Fuel Feed Pump 12V		
18	51030006	2	Washer DIN 125-6		
19	53033006	2	Washer GROWER DIN 127-6		
22	60900126	1	TERMINAL		
NS	13814012	1	Pipe [NS]		
NS	52102155	2	Bolt DIN 933 M6-12 8.8 [NS]		
NS	58088283	2	Pastic Cable Zip Tie [NS]		

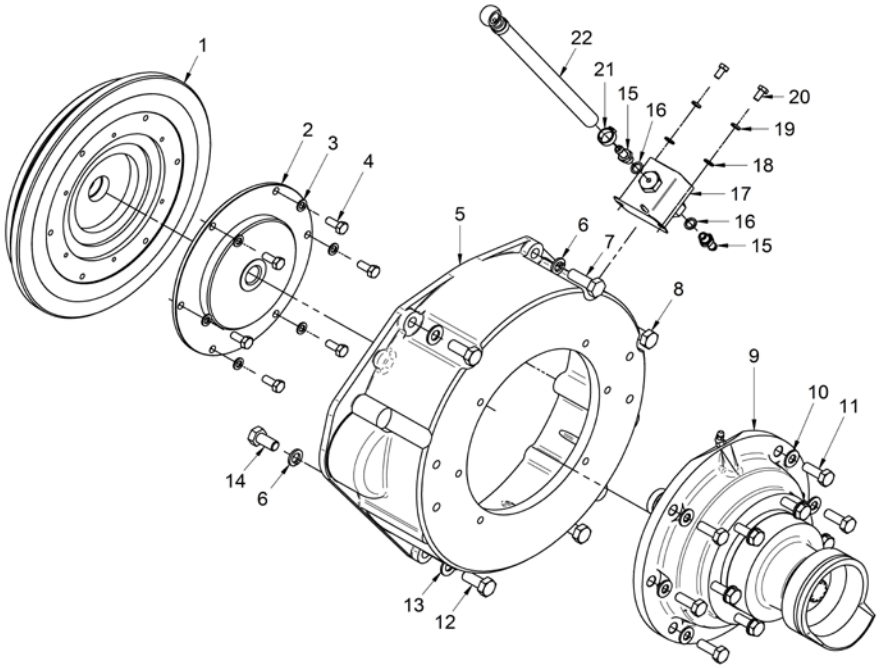

[NS] Not shown

Kit Gearbox

17310100.4			Kit Z-Drive VOLVO 270/280/290 Z=10		
FIG.	**REF.**	**QTY**	**DESCR.**	**FROM**	**UPTO**
1	17322027.4.1	1	Flywheel		
2	17210071	1	Flexible Coupling Type B SAE 6"1/2		
3	53038008	6	Washer DIN 6798-A 8		
4	52102257	6	Bolt DIN 933 M8-20 8.8		
5	13410018	1	SAE 7,adaptor flange		
6	17210100.1R	1	Kit Z-Drive Volvo 270/280/290 Z=10		
7	53038010	6	Washer DIN 6798-A 10		
8	52102309	6	Bolt DIN 933 M10-30 8.8		
9	52202359	3	Bolt DIN 933 M12-1,25-30 8.8		
10	53038012	3	Washer DIN 6798-A 12		
11	53033012	2	Washer GROWER DIN 127-12		
12	52102358	2	Bolt DIN 933 M12-25 8.8		
13	13814072	2	NIPPLE EYE		
14	57000361	2	Washer 10-14-1,5		
15	13814070	1	Electric Fuel Feed Pump 12V		
16	51030006	2	Washer DIN 125-6		
17	53033006	2	Washer GROWER DIN 127-6		
18	52102155	2	Bolt DIN 933 M6-12 8.8		
19	13814012	1	Pipe		
20	51086015	1	One Ear Clamp With Interior Ring		
NS	58088283	2	Pastic Cable Zip Tie [NS]		
NS	60900126	1	TERMINAL [NS]		

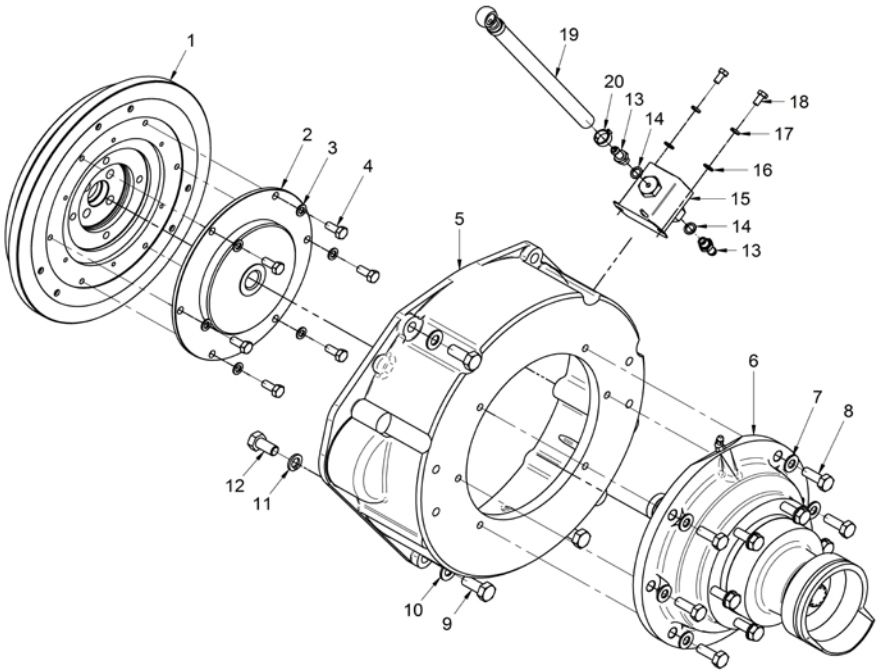

[NS] Not shown

Kit Gearbox

17310105.4			Kit GearBox VOLVO MS-2 & MS-2B		
FIG.	REF.	QTY	DESCR.	FROM	UPTO
1	17322027.4.2	1	Flywheel		
2	13810042	1	Flexible Coupling Type F D. 175 VULKAN		
3	53033006	8	Washer GROWER DIN 127-6		
4	52102156	6	Bolt DIN 933 M6-16 8.8		
5	13410016	1	VOLVO S-120,adaptor flange		
6	17010003	1	Bracket		
7	53033012	6	Washer GROWER DIN 127-12		
8	52102359	4	Bolt DIN 933 M12-30 8.8		
9	53038010	6	Washer DIN 6798-A 10		
10	52102309	6	Bolt DIN 933 M10-30 8.8		
11	17010004	1	Bracket		
12	52202359	3	Bolt DIN 933 M12-1,25-30 8.8		
13	53038012	3	Washer DIN 6798-A 12		
14	52102358	2	Bolt DIN 933 M12-25 8.8		
15	13814070	1	Electric Fuel Feed Pump 12V		
16	13814072	2	NIPPLE EYE		
17	57000361	2	Washer 10-14-1,5		
18	51030006	2	Washer DIN 125-6		
19	52102155	2	Bolt DIN 933 M6-12 8.8		
20	51086015	1	One Ear Clamp With Interior Ring		
21	13814012	1	Pipe		
NS	58088282	2	Pastic Cable Zip Tie [NS]		
NS	60900126	1	TERMINAL [NS]		

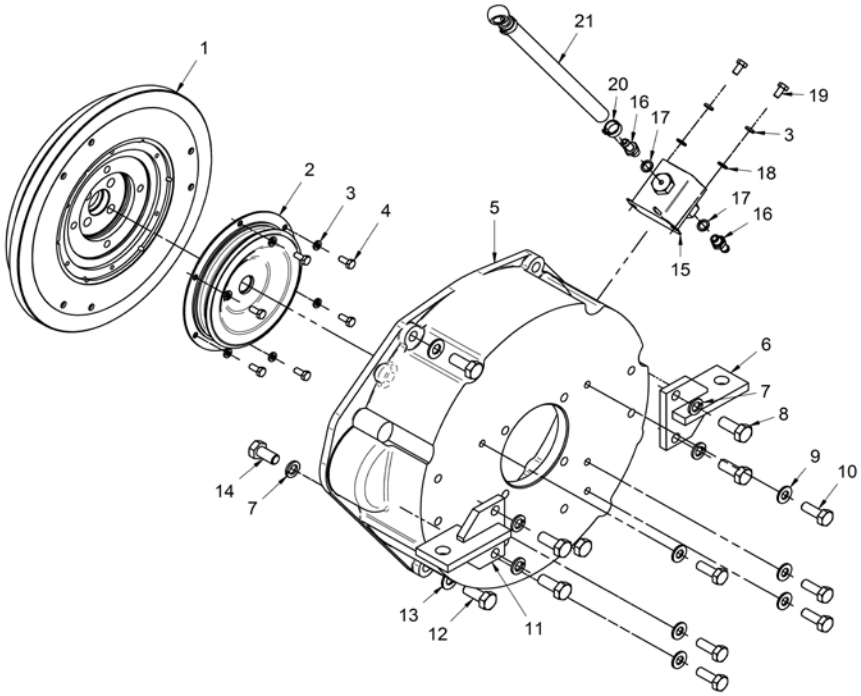

[NS] Not shown

Kit Gearbox

	17310106		Kit S-Drive VOLVO 130S		
FIG.	**REF.**	**QTY**	**DESCR.**	**FROM**	**UPTO**
1	17210018	1	Suplement,Flywheel		
2	52103161	6	Bolt DIN 912 M6-40 8.8		
3	17310070	1	Flexible Coupling Type A D. 185		
4	53033006	6	Washer GROWER DIN 127-6		
5	52102156	6	Bolt DIN 933 M6-16 8.8		
6	13410022	1	Adaptor Flange M-34		
7	53033010	6	Washer GROWER DIN 127-10		
8	52101311	6	Bolt DIN 931 M10-40 8.8		
9	52202358	3	Bolt DIN 933 M12-1,25-25 8.8		
10	53038012	3	Washer DIN 6798-A 12		
11	53033012	2	Washer GROWER DIN 127-12		
12	52102358	2	Bolt DIN 933 M12-25 8.8		
13	13814070	1	Electric Fuel Feed Pump 12V		
14	13814012	1	Pipe		
15	51086015	1	One Ear Clamp With Interior Ring		
16	13814072	2	NIPPLE EYE		
17	57000361	2	Washer 10-14-1,5	01/06/2013	
18	52102154	2	Bolt DIN 933 M6-10 8.8		
19	51030006	2	Washer DIN 125-6		
NS	58088284	1	Pastic Cable Zip Tie [NS]		
NS	60900126	1	TERMINAL [NS]		

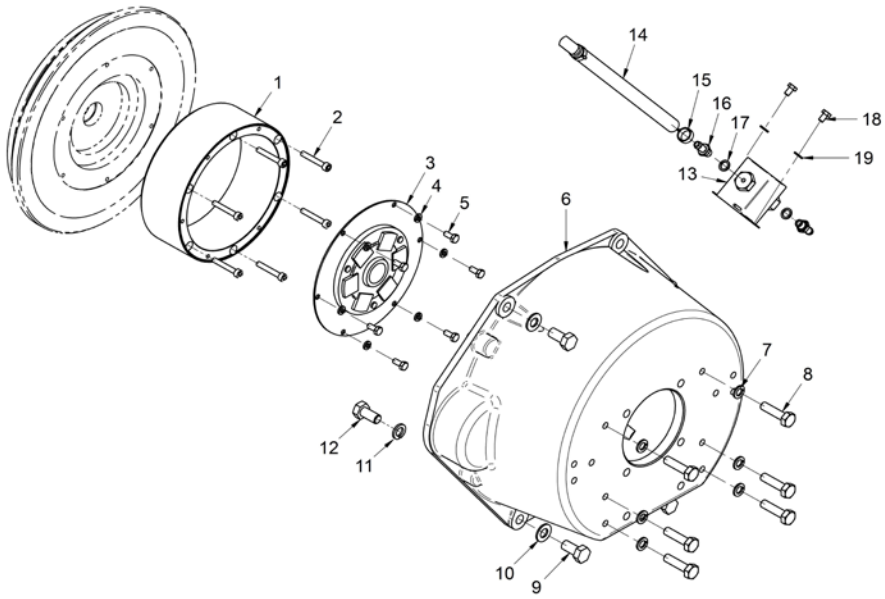

[NS] Not shown

Kit Gearbox

17310110.4			Kit Z-Drive VOLVO 280/290 Z=26		
FIG.	**REF.**	**QTY**	**DESCR.**	**FROM**	**UPTO**
1	17322027.4.1	1	Flywheel		
2	17210071	1	Flexible Coupling Type B SAE 6"1/2		
3	53038008	6	Washer DIN 6798-A 8		
4	52102257	6	Bolt DIN 933 M8-20 8.8		
5	13410018	1	SAE 7,adaptor flange		
6	17210110.1R	1	Kit Z-Drive Volvo 280/290 Z=26		
7	53038010	6	Washer DIN 6798-A 10		
8	52102309	6	Bolt DIN 933 M10-30 8.8		
9	52202359	3	Bolt DIN 933 M12-1,25-30 8.8		
10	53038012	3	Washer DIN 6798-A 12		
11	53033012	2	Washer GROWER DIN 127-12		
12	52102358	2	Bolt DIN 933 M12-25 8.8		
13	13814072	2	NIPPLE EYE		
14	57000361	2	Washer 10-14-1,5		
15	13814070	1	Electric Fuel Feed Pump 12V		
16	51030006	2	Washer DIN 125-6		
17	53033006	2	Washer GROWER DIN 127-6		
18	52102155	2	Bolt DIN 933 M6-12 8.8		
19	51086015	1	One Ear Clamp With Interior Ring		
20	13814012	1	Pipe		
NS	58088283	2	Pastic Cable Zip Tie [NS]		
NS	60900126	1	TERMINAL [NS]		

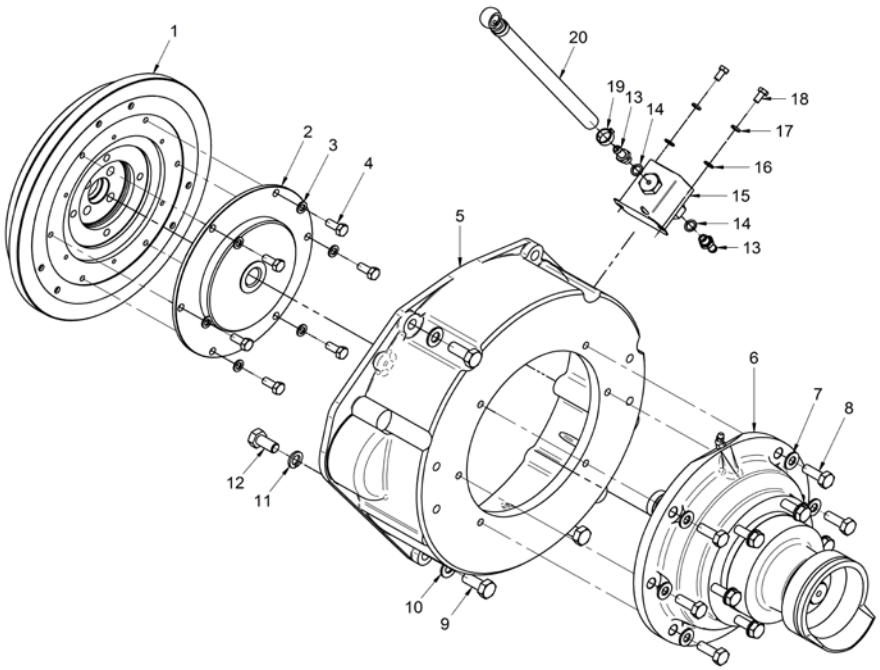

[NS] Not shown

Kit Gearbox

	17310125		Kit S-Drive BUKH DV36		
FIG.	**REF.**	**QTY**	**DESCR.**	**FROM**	**UPTO**
1	17310025	1	Shaft		
2	53033006	10	Washer GROWER DIN 127-6		
3	52102157	6	Bolt DIN 933 M6-20 8.8		
4	17310027	1	KEY		
5	13910027	1	Washer		
6	53033010	1	Washer GROWER DIN 127-10		
7	52102309	1	Bolt DIN 933 M10-30 8.8		
8	13410018	1	SAE 7,adaptor flange		
9	15217010	1	Bracket,wirings		
10	53033012	6	Washer GROWER DIN 127-12		
11	52202361	3	Bolt DIN 933 M12-1,25-40 8.8		
12	17010003	1	Bracket		
13	52102359	4	Bolt DIN 933 M12-30 8.8		
14	17310026	1	BUKH S-Drive DV-36, DV-38 Adaptor Flange		
15	53038010	13	Washer DIN 6798-A 10		
16	52102308	6	Bolt DIN 933 M10-25 8.8		
17	53033008	8	Washer GROWER DIN 127-8		
18	52103257	8	Bolt DIN 912 M8-20 8.8		
19	17010004	1	Bracket		
20	52102358	2	Bolt DIN 933 M12-25 8.8		
21	52202359	3	Bolt DIN 933 M12-1,25-30 8.8		
22	53038012	5	Washer DIN 6798-A 12		
23	13814070	1	Electric Fuel Feed Pump 12V		
24	13814012	1	Pipe	25/09/2007	
25	51086015	1	One Ear Clamp With Interior Ring		
26	13814072	2	NIPPLE EYE		
27	57000361	2	Washer 10-14-1,5	01/06/2013	
28	52102154	2	Bolt DIN 933 M6-10 8.8		
29	51030006	2	Washer DIN 125-6		
30	53038008	1	Washer DIN 6798-A 8		
31	52120008	1	Nut DIN 934 M8 8.8		
NS	58088283	2	Pastic Cable Zip Tie [NS]	27/02/2014	
NS	60900126	1	TERMINAL [NS]		

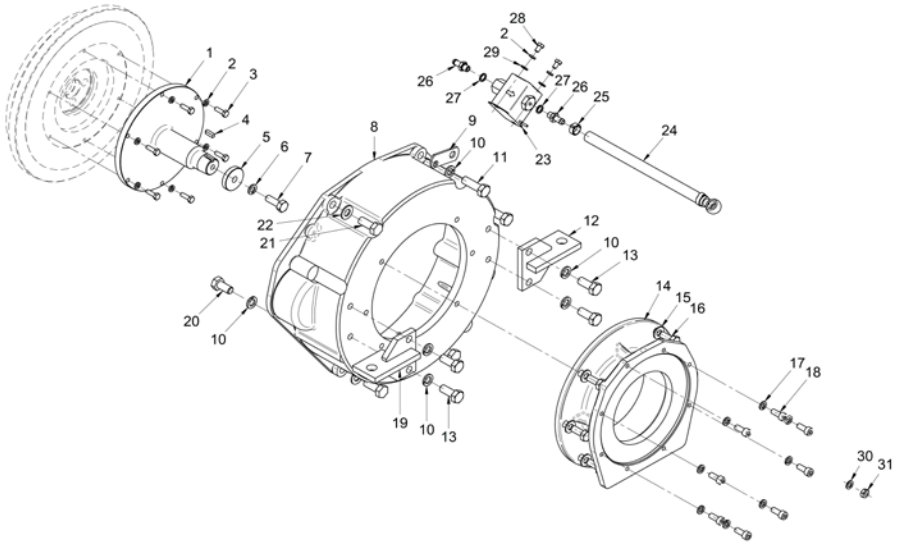

[NS] Not shown

Kit Gearbox

	17310210.4		Kit GearBox TM-93		
FIG.	**REF.**	**QTY**	**DESCR.**	**FROM**	**UPTO**
1	17322027.4.1	1	Flywheel		
2	17210071	1	Flexible Coupling Type B SAE 6"1/2		
3	53038008	6	Washer DIN 6798-A 8		
4	52102257	6	Bolt DIN 933 M8-20 8.8		
5	52120010	6	Nut DIN 934 M10 8.8		
6	53033010	8	Washer GROWER DIN 127-10		
7	51030010	6	Washer DIN 125-10		
8	13410018	1	SAE 7,adaptor flange		
9	24870021	1	BW Housing TM-93/170/485/545		
10	ALLPA.93	1	Coupling,cable	23/05/2017	
10	14719115	1	Coupling,cable		23/05/2017
11	51030006	6	Washer DIN 125-6		
12	51051107	1	Pin DIN-94 1,6-16		
13	52102258	2	Bolt DIN 933 M8-25 8.8	12/03/2015	
14	53033008	6	Washer GROWER DIN 127-8		
15	52202307	1	Bolt DIN 933 M10-1,25-20 8.8		
16	56000061	1	Washer 10-16-1,5		
17	24810913	1	Clamp,CABLE		
18	51030005	2	Washer DIN 125-5		
19	18619020	1	Bracket,Gear box control		
20	52102359	4	Bolt DIN 933 M12-30 8.8		
21	53033012	6	Washer GROWER DIN 127-12		
22	51030012	4	Washer DIN 125-12		
23	17310001	2	Bracket Rear		
24	52202359	3	Bolt DIN 933 M12-1,25-30 8.8		
25	53038012	3	Washer DIN 6798-A 12		
26	52102358	2	Bolt DIN 933 M12-25 8.8		
27	13814070	1	Electric Fuel Feed Pump 12V		
28	57000361	2	Washer 10-14-1,5		
29	13814072	2	NIPPLE EYE		
30	13814012	1	Pipe		
31	51086015	1	One Ear Clamp With Interior Ring		
32	53033006	2	Washer GROWER DIN 127-6		
33	52102154	2	Bolt DIN 933 M6-10 8.8		
34	17611017	3	Rubber Elbow		

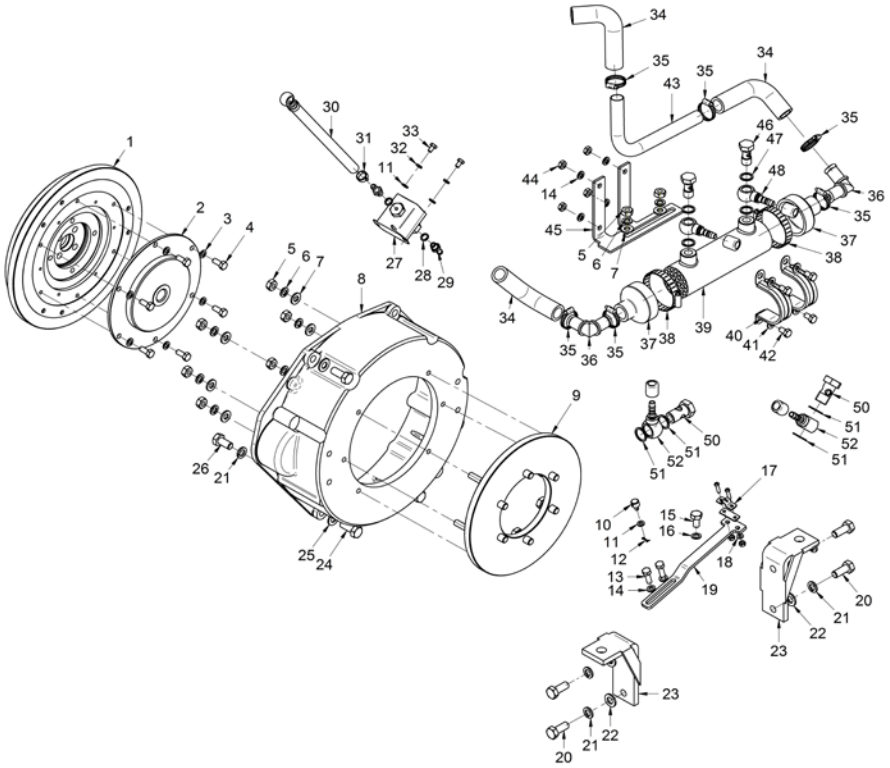

[NS] Not shown

Kit Gearbox

	17310210.4		Kit GearBox TM-93		
FIG.	**REF.**	**QTY**	**DESCR.**	**FROM**	**UPTO**
35	54081020	6	Clamp DIN 3017 20-32/9 W4		
36	19421058.1	2	Elbow		
37	15212007	2	Water Cooler Cover		
38	54082050	2	Clamp DIN 3017 50-70/12 W4		
39	14712051	1	Cooler,oil		
40	59072604	2	Clamp	29/03/2014	
41	51030008	6	Washer DIN 125-8		
42	52102256	4	Bolt DIN 933 M8-15 8.8		
43	17011028	1	Pipe		
44	52120008	6	Nut DIN 934 M8 8.8		
45	13912041	1	Bracket,TM Oil Cooler		
46	14712015	2	Bolt,Coupling pipe oil		
47	57000375	4	Washer 17-22-1,5		
48	17112024	2	Pipe, rev.oil Cooler		
NS	13211035	1	Exhaust Manifold Outlet Bend [NS]		
NS	13811002	1	Water Cooler Cover [NS]		
NS	58088283	2	Pastic Cable Zip Tie [NS]		
NS	60900126	1	TERMINAL [NS]		

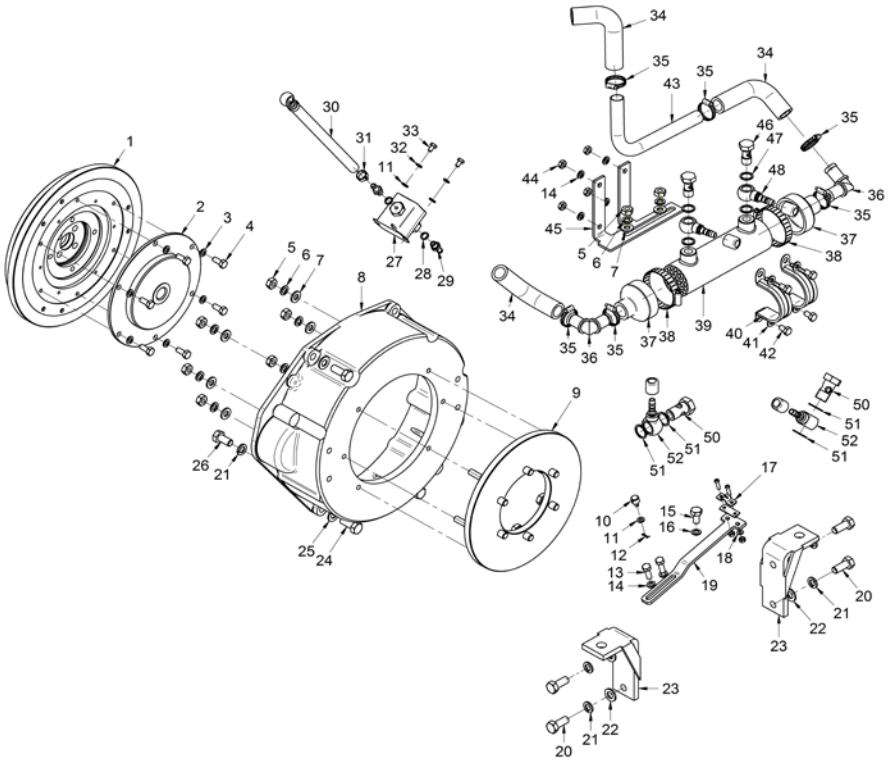

Kit Gearbox

	17310211.4		Kit GearBox TM-345/A		
FIG.	**REF.**	**QTY**	**DESCR.**	**FROM**	**UPTO**
1	17322027.4.1	1	Flywheel		
2	17210071	1	Flexible Coupling Type B SAE 6"1/2		
3	53038008	6	Washer DIN 6798-A 8		
4	52102257	10	Bolt DIN 933 M8-20 8.8		
5	13410018	1	SAE 7,adaptor flange		
6	17010003	1	Bracket		
7	53033012	6	Washer GROWER DIN 127-12		
8	52102359	4	Bolt DIN 933 M12-30 8.8		
9	53038010	5	Washer DIN 6798-A 10		
10	52102308	5	Bolt DIN 933 M10-25 8.8		
11	24810913	1	Clamp,CABLE		
12	51030005	2	Washer DIN 125-5		
13	18619020	1	Bracket,Gear box control		
14	51030008	6	Washer DIN 125-8		
15	53033008	8	Washer GROWER DIN 127-8		
16	52102256	2	Bolt DIN 933 M8-15 8.8		
17	51051107	1	Pin DIN-94 1,6-16		
18	ALLPA.93	1	Coupling,cable	23/05/2017	
18	14719115	1	Coupling,cable		23/05/2017
19	17010004	1	Bracket		
20	52202359	3	Bolt DIN 933 M12-1,25-30 8.8		
21	53038012	3	Washer DIN 6798-A 12		
22	52102358	2	Bolt DIN 933 M12-25 8.8		
23	13814070	1	Electric Fuel Feed Pump 12V		
24	13814012	1	Pipe		
25	51086015	1	One Ear Clamp With Interior Ring		
26	51030006	6	Washer DIN 125-6		
28	52102154	2	Bolt DIN 933 M6-10 8.8		
29	57000361	2	Washer 10-14-1,5		
30	13814072	2	NIPPLE EYE		
31	17611017	3	Rubber Elbow		
32	54081020	8	Clamp DIN 3017 20-32/9 W4		
33	19421058.1	2	Elbow		
34	15212007	2	Water Cooler Cover		
35	54082050	2	Clamp DIN 3017 50-70/12 W4		

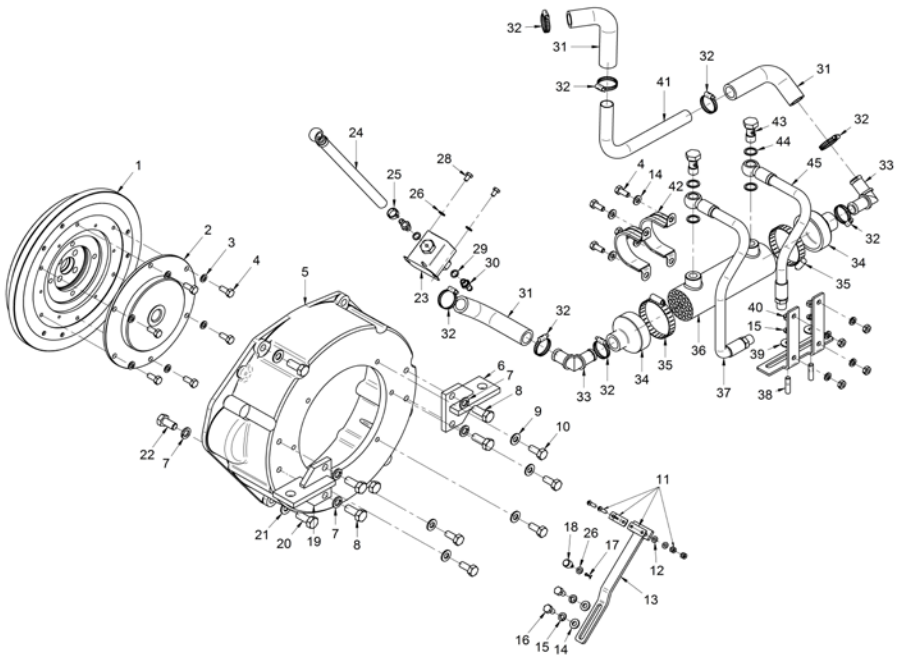

[NS] Not shown

Kit Gearbox

17310211.4			Kit GearBox TM-345/A		
FIG.	REF.	QTY	DESCR.	FROM	UPTO
36	14712051	1	Cooler,oil		
37	17012024	2	Pipe		
38	12120018	2	Stud		
39	51031008	2	Washer DIN 9021 8		
40	52120008	6	Nut DIN 934 M8 8.8		
41	17011028	1	Pipe		
42	59072604	2	Clamp	29/03/2014	
43	14712015	2	Bolt,Coupling pipe oil		
44	57000375	4	Washer 17-22-1,5		
46	18012041	1	Bracket,TM93/170 oil cooler		
NS	13211027	1	Water Inlet Bend [NS]		
NS	13811002	1	Water Cooler Cover [NS]		
NS	58088283	2	Pastic Cable Zip Tie [NS]		
NS	60900126	1	TERMINAL [NS]		

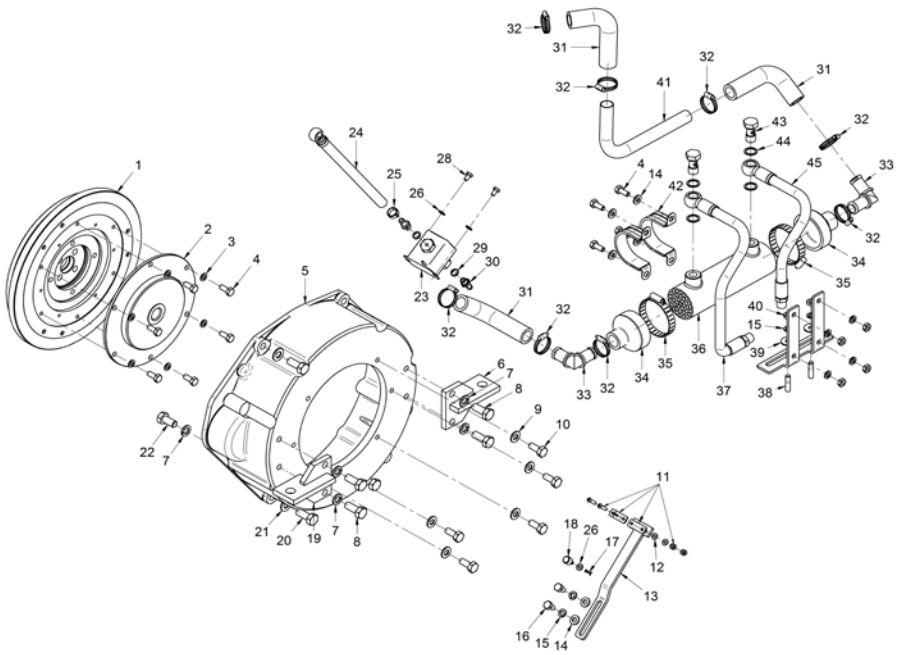

Kit Gearbox

17310212.4			Kit GearBox TM-345/A (Without Cooler)		
FIG.	REF.	QTY	DESCR.	FROM	UPTO
1	17322027.4.1	1	Flywheel		
2	17210071	1	Flexible Coupling Type B SAE 6"1/2		
3	53038008	6	Washer DIN 6798-A 8		
4	52102257	6	Bolt DIN 933 M8-20 8.8		
5	13410018	1	SAE 7,adaptor flange		
6	17010003	1	Bracket		
7	53038010	6	Washer DIN 6798-A 10		
8	52102308	6	Bolt DIN 933 M10-25 8.8		
9	52102359	4	Bolt DIN 933 M12-30 8.8		
10	53033012	6	Washer GROWER DIN 127-12		
11	17010004	1	Bracket		
12	52202359	3	Bolt DIN 933 M12-1,25-30 8.8		
13	53038012	3	Washer DIN 6798-A 12		
14	52102358	2	Bolt DIN 933 M12-25 8.8		
15	13814070	1	Electric Fuel Feed Pump 12V		
16	13814012	1	Pipe		
17	51086015	1	One Ear Clamp With Interior Ring		
18	52102155	2	Bolt DIN 933 M6-12 8.8		
19	53033006	2	Washer GROWER DIN 127-6		
20	51030006	2	Washer DIN 125-6		
21	57000361	2	Washer 10-14-1,5		
22	13814072	2	NIPPLE EYE		
NS	58088283	2	Pastic Cable Zip Tie [NS]		
NS	60900126	1	TERMINAL [NS]		

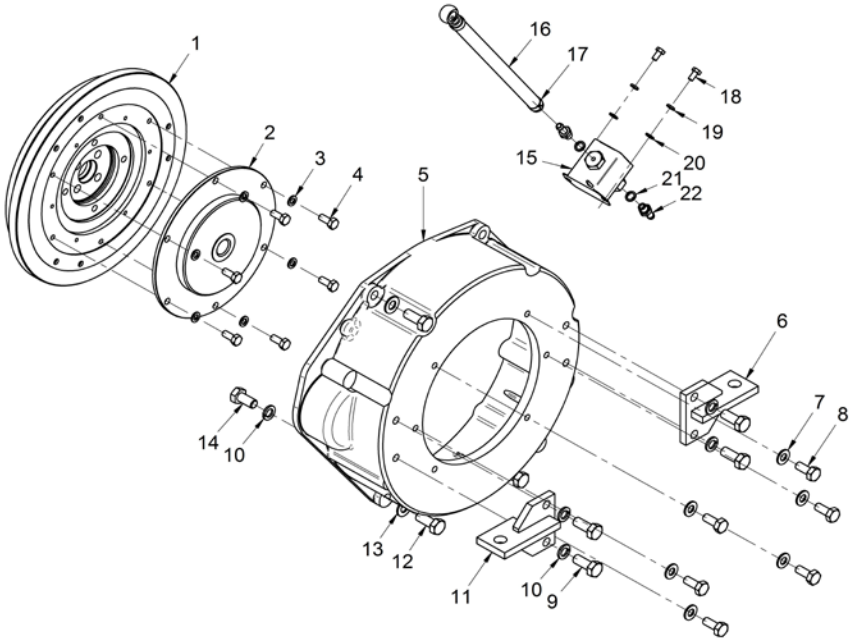

[NS] Not shown

Kit Gearbox

	17310215		Kit JET CASTOLDI Num.3		
FIG.	REF.	QTY	DESCR.	FROM	UPTO
1	13810041	1	Damper,universal joint coup.		
2	53033006	6	Washer GROWER DIN 127-6		
3	52102157	6	Bolt DIN 933 M6-20 8.8		
4	13410018	1	SAE 7,adaptor flange		
5	53033012	7	Washer GROWER DIN 127-12		
6	52202361	3	Bolt DIN 933 M12-1,25-40 8.8		
7	17010003	1	Bracket		
8	52102359	4	Bolt DIN 933 M12-30 8.8		
9	52103311	6	Bolt DIN 912 M10-40 8.8		
10	53038010	6	Washer DIN 6798-A 10		
11	17010004	1	Bracket		
12	52202359	3	Bolt DIN 933 M12-1,25-30 8.8		
13	53038012	5	Washer DIN 6798-A 12		
14	52102358	2	Bolt DIN 933 M12-25 8.8		
15	13814070	1	Electric Fuel Feed Pump 12V		
16	13814072	2	NIPPLE EYE		
17	57000361	2	Washer 10-14-1,5	01/06/2013	
18	52102154	2	Bolt DIN 933 M6-10 8.8		
19	51030006	2	Washer DIN 125-6		
21	13814012	1	Pipe	25/09/2007	
NS	58088283	2	Pastic Cable Zip Tie [NS]	27/02/2014	
NS	60900126	1	TERMINAL [NS]		

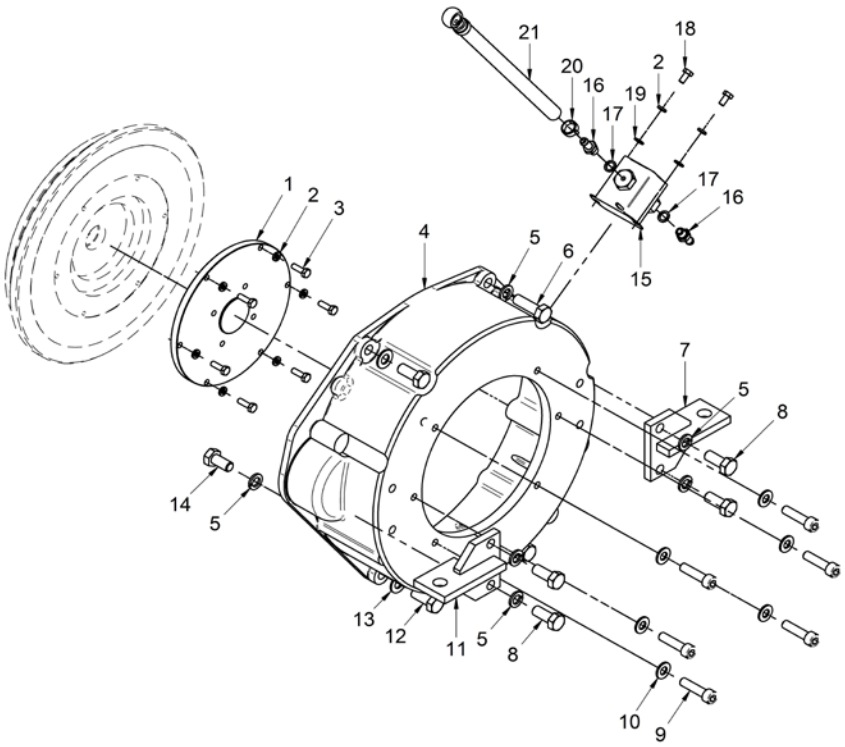

[NS] Not shown

Kit Gearbox

	17310216		Kit JET CASTOLDI Num.5 SAE 5		
FIG.	**REF.**	**QTY**	**DESCR.**	**FROM**	**UPTO**
1	17310009	1	Suplement,Flywheel		
2	53033006	8	Washer GROWER DIN 127-6		
3	52102158	6	Bolt DIN 933 M6-25 8.8		
4	53033010	14	Washer GROWER DIN 127-10		
5	52102308	6	Bolt DIN 933 M10-25 8.8		
6	13410019	1	SAE 5,adaptor flange		
7	53033012	2	Washer GROWER DIN 127-12		
8	51030012	1	Washer DIN 125-12		
9	17214022	1	Bracket, Pipe		
10	15217010	1	Bracket,wirings		
11	52202361	3	Bolt DIN 933 M12-1,25-40 8.8		
12	52103309	8	Bolt DIN 912 M10-30 8.8		
13	52202359	3	Bolt DIN 933 M12-1,25-30 8.8		
14	53038012	5	Washer DIN 6798-A 12		
15	52102358	2	Bolt DIN 933 M12-25 8.8		
16	13814070	1	Electric Fuel Feed Pump 12V		
17	13814072	2	NIPPLE EYE		
18	57000361	2	Washer 10-14-1,5	01/06/2013	
19	52102154	2	Bolt DIN 933 M6-10 8.8		
20	51030006	2	Washer DIN 125-6		
22	13814012	1	Pipe	25/09/2007	
NS	58088283	2	Pastic Cable Zip Tie [NS]	27/02/2014	
NS	60900126	1	TERMINAL [NS]		

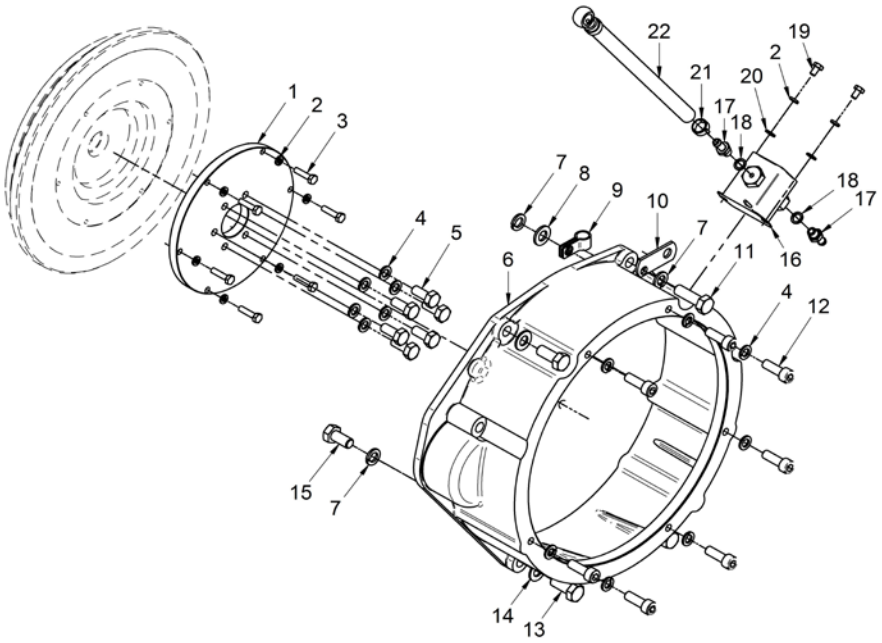

[NS] Not shown

Kit Gearbox

17310217			Kit GearBox PRM-150 Without Oil Cooler		
FIG.	REF.	QTY	DESCR.	FROM	UPTO
1	17210077	1	Flexible Coupling T. E D.185 PRM150	07/09/2015	
1	17310070	1	Flexible Coupling Type A D. 185		07/09/2015
2	53033006	6	Washer GROWER DIN 127-6		
3	52102155	6	Bolt DIN 933 M6-12 8.8		07/09/2015
3	52102156	6	Bolt DIN 933 M6-16 8.8	07/09/2015	
4	52101259	6	Bolt DIN 931 M8-30 8.8		
5	53038008	6	Washer DIN 6798-A 8		
6	17210009	1	Bell Housing,GearBox		
7	53033012	2	Washer GROWER DIN 127-12		
8	52202361	3	Bolt DIN 933 M12-1,25-40 8.8		
9	17210011	2	Rear Bracket MINI-33/44 TMC60		07/09/2015
9	17210030	2	Rear Bracket, PRM-150	07/09/2015	
10	53033010	6	Washer GROWER DIN 127-10		
11	52102309	6	Bolt DIN 933 M10-30 8.8		
12	53038012	5	Washer DIN 6798-A 12		
13	52120012	2	Nut DIN 934 M12 8.8		
14	52101363	2	Bolt DIN 931 M12-50 8.8		
15	13814070	1	Electric Fuel Feed Pump 12V		
16	13814012	1	Pipe	25/09/2007	
17	51086015	1	One Ear Clamp With Interior Ring		
18	13814072	2	NIPPLE EYE		
19	57000361	2	Washer 10-14-1,5	01/06/2013	
20	52102154	2	Bolt DIN 933 M6-10 8.8		
21	51030006	3	Washer DIN 125-6		
NS	58088283	2	Pastic Cable Zip Tie [NS]	27/02/2014	
NS	60900126	1	TERMINAL [NS]		

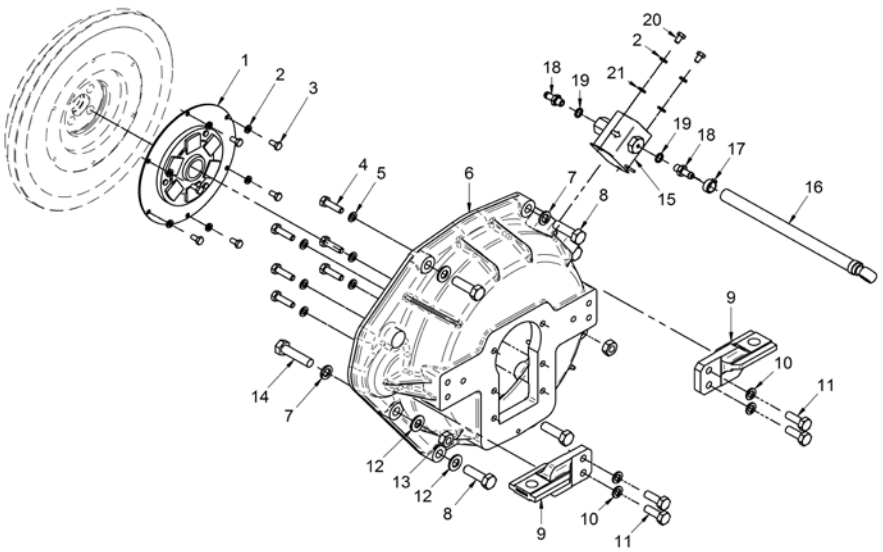

[NS] Not shown

Kit Gearbox

17310220.4			Kit GearBox BW (Without Oil Cooler)		
FIG.	**REF.**	**QTY**	**DESCR.**	**FROM**	**UPTO**
1	17322027.4.1	1	Flywheel		
2	17210071	1	Flexible Coupling Type B SAE 6"1/2		
3	53038008	6	Washer DIN 6798-A 8		
4	52102257	6	Bolt DIN 933 M8-20 8.8		
5	13410018	1	SAE 7,adaptor flange		
6	17010004	1	Bracket		
7	52102359	4	Bolt DIN 933 M12-30 8.8		
8	53033012	6	Washer GROWER DIN 127-12		
9	17010003	1	Bracket		
10	52202359	3	Bolt DIN 933 M12-1,25-30 8.8		
11	53038012	3	Washer DIN 6798-A 12		
12	52102358	2	Bolt DIN 933 M12-25 8.8		
13	13814070	1	Electric Fuel Feed Pump 12V		
14	13814072	2	NIPPLE EYE		
15	57000361	2	Washer 10-14-1,5		
16	53033006	2	Washer GROWER DIN 127-6		
17	51030006	2	Washer DIN 125-6		
18	52102154	2	Bolt DIN 933 M6-10 8.8		
19	51086015	1	One Ear Clamp With Interior Ring		
20	13814012	1	Pipe		
NS	58088283	2	Pastic Cable Zip Tie [NS]		
NS	60900126	1	TERMINAL [NS]		

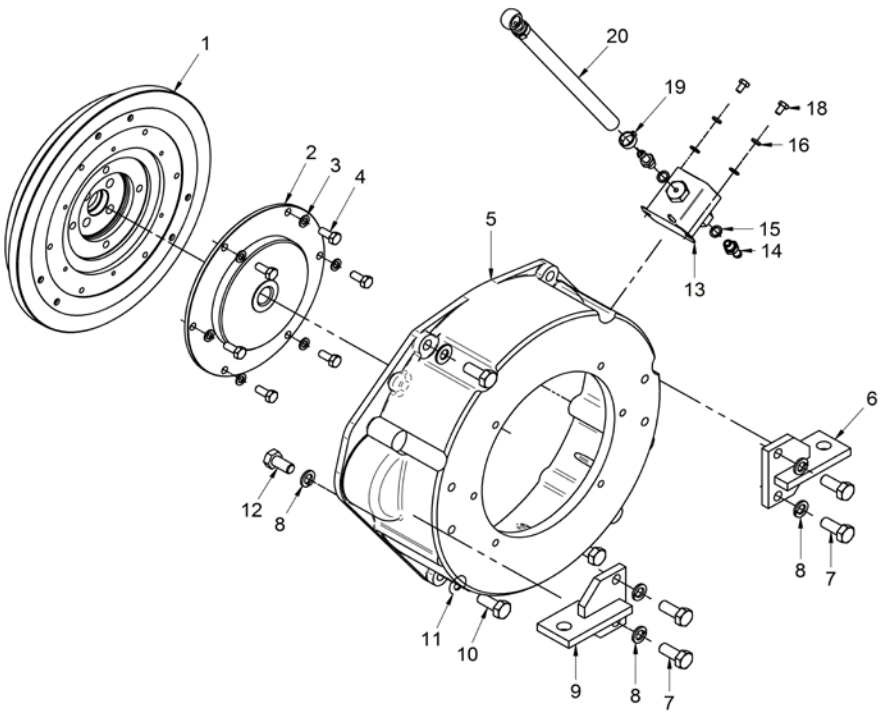

[NS] Not shown

Kit Gearbox

17310221.4			Kit GearBox BORG WARNER With Oil Cooler		
FIG.	**REF.**	**QTY**	**DESCR.**	**FROM**	**UPTO**
1	13410018	1	SAE 7,adaptor flange		
2	53038012	3	Washer DIN 6798-A 12		
3	52202359	3	Bolt DIN 933 M12-1,25-30 8.8		
4	53033012	6	Washer GROWER DIN 127-12		
5	52102358	2	Bolt DIN 933 M12-25 8.8		
6	13814070	1	Electric Fuel Feed Pump 12V		
7	51030006	2	Washer DIN 125-6		
8	52102154	2	Bolt DIN 933 M6-10 8.8		
9	51086015	1	One Ear Clamp With Interior Ring		
10	17322027.4.1	1	Flywheel		
11	17010003	1	Bracket		
12	17010004	1	Bracket		
13	52102359	4	Bolt DIN 933 M12-30 8.8		
14	17210071	1	Flexible Coupling Type B SAE 6"1/2		
15	53038008	6	Washer DIN 6798-A 8		
16	52102257	6	Bolt DIN 933 M8-20 8.8		
17	16111015	1	Pipe 20-28-55		
18	17611017	2	Rubber Elbow		
19	51030010	6	Washer DIN 125-10		
20	53033010	6	Washer GROWER DIN 127-10		
21	52101318	6	Bolt DIN 931 M10-75 8.8		
22	13814012	1	Pipe	25/09/2007	
23	57000361	2	Washer 10-14-1,5	01/06/2013	
24	13814072	2	NIPPLE EYE		
25	52302309	2	Bolt DIN 933 W7/16-30 8.8		
26	51083060	2	Clamp "P" 59-63		
27	15212007	2	Water Cooler Cover		
28	14712051	1	Cooler,oil		
29	54081020	8	Clamp DIN 3017 20-32/9 W4		
30	54082050	2	Clamp DIN 3017 50-70/12 W4		
31	17112019	1	Bracket,Cooler Oil		
32	57000375	6	Washer 17-22-1,5		
33	14712032	1	Coupling,ball pipe oil		
34	14712035	3	Collar, Union		
35	14712031	4	Retainer		

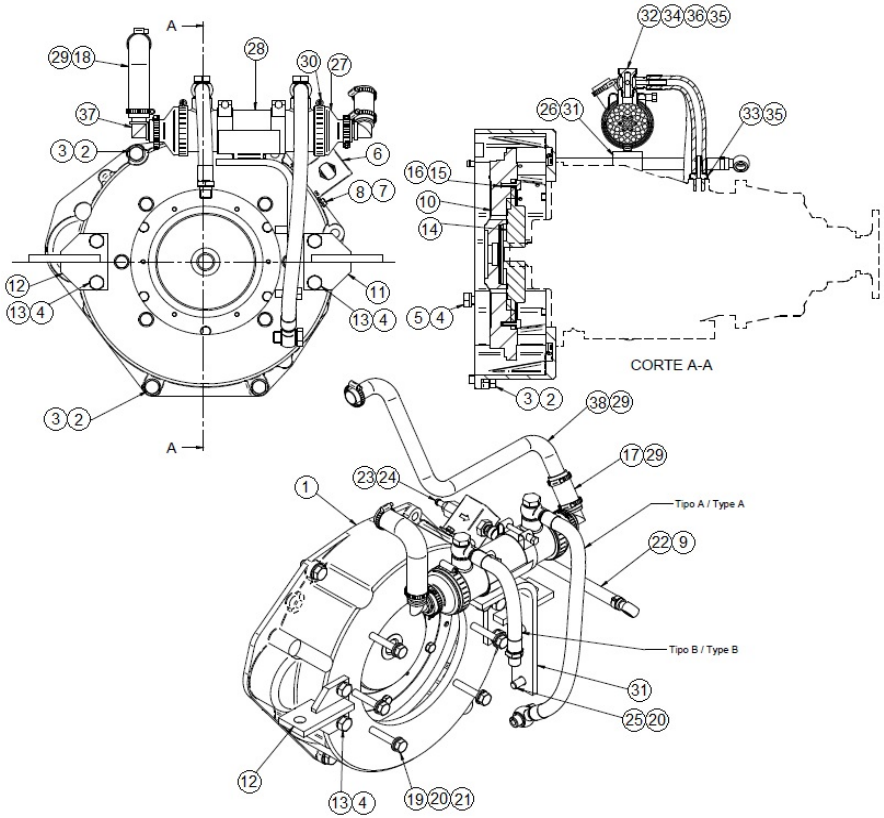

[NS] Not shown
[VAR] Variable according to repair

Kit Gearbox

17310221.4			Kit GearBox BORG WARNER With Oil Cooler		
FIG.	**REF.**	**QTY**	**DESCR.**	**FROM**	**UPTO**
36	14712015	3	Bolt,Coupling pipe oil		
37	19421058.1	2	Elbow		
38	17011029	1	Pipe		
NS	M84501019	0	LOW Pressure Hose D. 10-19 [NS] [VAR]	23/10/2008	
NS	14912043	1	Coupling,screw pipe Gear box [NS]		
NS	53033011	2	Washer GROWER DIN 127-11 [NS]		
NS	58088283	2	Pastic Cable Zip Tie [NS]	27/02/2014	
NS	60900126	1	TERMINAL [NS]		

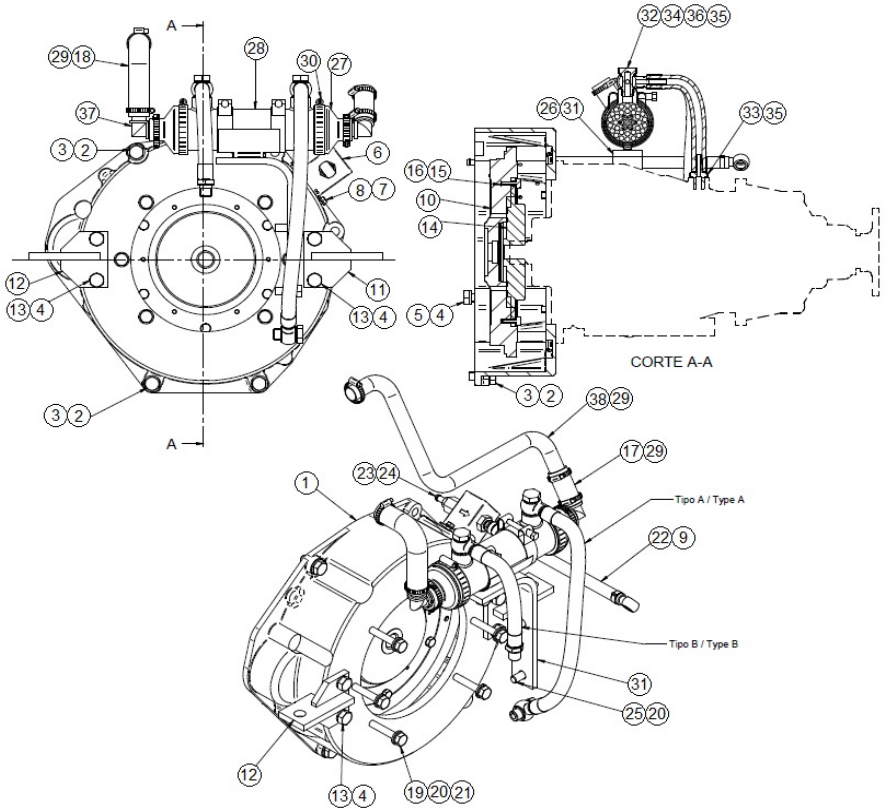

Kit Gearbox

	17310225.4		Kit GearBox PRM-160 SAE 5		
FIG.	**REF.**	**QTY**	**DESCR.**	**FROM**	**UPTO**
1	17322027.4.1	1	Flywheel		
2	17010072	1	Flexible Coupling T. E SAE 6"1/2 PRM160		
3	53033008	6	Washer GROWER DIN 127-8		
4	52102256	6	Bolt DIN 933 M8-15 8.8		
5	13410019	1	SAE 5,adaptor flange		
6	53033010	7	Washer GROWER DIN 127-10		
7	52102309	7	Bolt DIN 933 M10-30 8.8		
8	53038012	3	Washer DIN 6798-A 12		
9	52202359	7	Bolt DIN 933 M12-1,25-30 8.8		
10	53033012	6	Washer GROWER DIN 127-12		
11	52102358	2	Bolt DIN 933 M12-25 8.8		
12	13814070	1	Electric Fuel Feed Pump 12V		
13	13814072	2	NIPPLE EYE		
14	57000361	2	Washer 10-14-1,5		
15	51030006	2	Washer DIN 125-6		
16	53033006	2	Washer GROWER DIN 127-6		
17	52102154	2	Bolt DIN 933 M6-10 8.8		
18	51086015	1	One Ear Clamp With Interior Ring		
19	13814012	1	Pipe		
20	17210003	1	Bracket, Engine Auxiliar		
21	17210028	1	Bracket, Front	08/10/2014	
NS	58088282	2	Pastic Cable Zip Tie [NS]		
NS	60900126	1	TERMINAL [NS]		

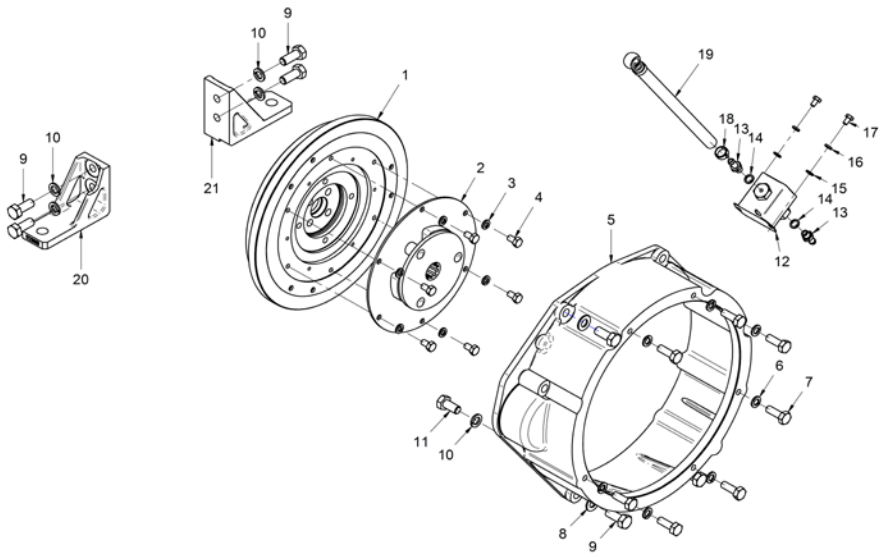

[NS] Not shown

Kit Gearbox

17310230			Kit GearBox HURTH-150A,ZF 15M IV		
FIG.	**REF.**	**QTY**	**DESCR.**	**FROM**	**UPTO**
1	17310070	1	Flexible Coupling Type A D. 185		
2	53033006	8	Washer GROWER DIN 127-6		
3	52102155	6	Bolt DIN 933 M6-12 8.8		
4	52101310	6	Bolt DIN 931 M10-35 8.8		
5	53038010	6	Washer DIN 6798-A 10		
6	17210012	1	Bell Housing,REV.HURTH 150V		
7	53033012	3	Washer GROWER DIN 127-12		
8	52202361	3	Bolt DIN 933 M12-1,25-40 8.8		
9	17210026	2	Rear Bracket	23/09/2014	
10	53033010	6	Washer GROWER DIN 127-10		
11	52102309	6	Bolt DIN 933 M10-30 8.8		
12	51030008	2	Washer DIN 125-8		
13	53033008	2	Washer GROWER DIN 127-8		
14	52120008	2	Nut DIN 934 M8 8.8		
15	51051107	1	Pin DIN-94 1,6-16		
16	51030006	6	Washer DIN 125-6		
17	ALLPA.93	1	Coupling,cable	23/05/2017	
17	14719115	1	Coupling,cable		23/05/2017
18	24610901	1	Bracket, GearBox Control		
19	24810913	1	Clamp,CABLE		
20	51030005	2	Washer DIN 125-5		
21	53038012	5	Washer DIN 6798-A 12		
22	52120012	2	Nut DIN 934 M12 8.8		
23	52101363	2	Bolt DIN 931 M12-50 8.8		
24	13814070	1	Electric Fuel Feed Pump 12V		
25	13814012	1	Pipe	25/09/2007	
26	51086015	1	One Ear Clamp With Interior Ring		
27	13814072	2	NIPPLE EYE		
28	57000361	2	Washer 10-14-1,5	01/06/2013	
29	52102154	2	Bolt DIN 933 M6-10 8.8		
NS	58088283	2	Pastic Cable Zip Tie [NS]	27/02/2014	
NS	60900126	1	TERMINAL [NS]		

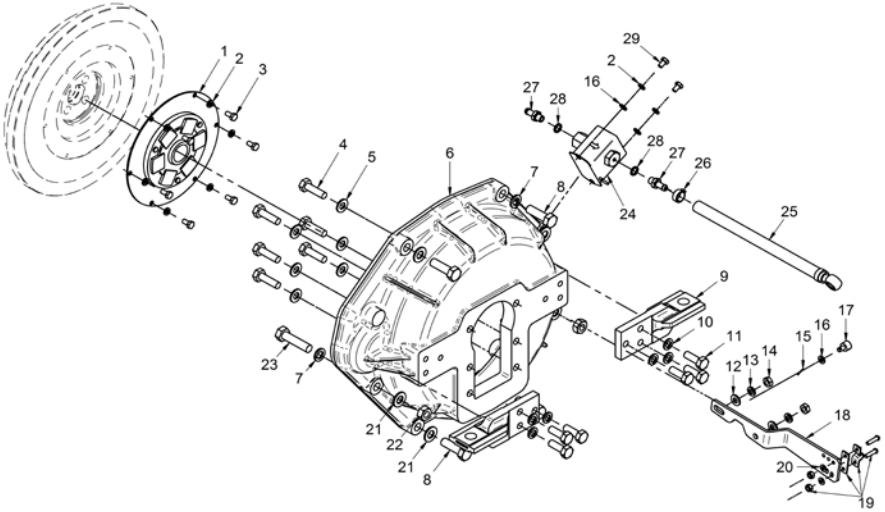

[NS] Not shown

Kit Gearbox

17310240			Kit GearBox TMC-60/60A W/ Cable support		
FIG.	REF.	QTY	DESCR.	FROM	UPTO
1	17310070	1	Flexible Coupling Type A D. 185		
2	53033006	6	Washer GROWER DIN 127-6		
3	52102155	6	Bolt DIN 933 M6-12 8.8		
4	52101259	6	Bolt DIN 931 M8-30 8.8		
5	53038008	6	Washer DIN 6798-A 8		
6	17210009	1	Bell Housing,GearBox		
7	53033012	2	Washer GROWER DIN 127-12		
8	52202361	3	Bolt DIN 933 M12-1,25-40 8.8		
9	17210026	2	Rear Bracket	23/09/2014	
10	53033010	6	Washer GROWER DIN 127-10		
11	52102309	6	Bolt DIN 933 M10-30 8.8		
12	24880901	1	Bracket, GearBox Control		
13	51030005	2	Washer DIN 125-5		
14	24810913	1	Clamp,CABLE		
15	51030008	2	Washer DIN 125-8		
16	53033008	2	Washer GROWER DIN 127-8	19/11/2013	
17	52102257	2	Bolt DIN 933 M8-20 8.8	10/07/2010	
18	ALLPA.93	1	Coupling,cable	23/05/2017	21/11/2017
18	14719115	1	Coupling,cable		
19	51030006	5	Washer DIN 125-6		
20	51051107	1	Pin DIN-94 1,6-16		
21	53038012	5	Washer DIN 6798-A 12		
22	52120012	2	Nut DIN 934 M12 8.8		
23	52101363	2	Bolt DIN 931 M12-50 8.8		
24	13814070	1	Electric Fuel Feed Pump 12V		
25	13814012	1	Pipe	25/09/2007	
26	51086015	1	One Ear Clamp With Interior Ring		
27	57000361	2	Washer 10-14-1,5	01/06/2013	
28	13814072	2	NIPPLE EYE		
29	52102154	2	Bolt DIN 933 M6-10 8.8		
NS	58088283	2	Pastic Cable Zip Tie [NS]	27/02/2014	
NS	60900126	1	TERMINAL [NS]		

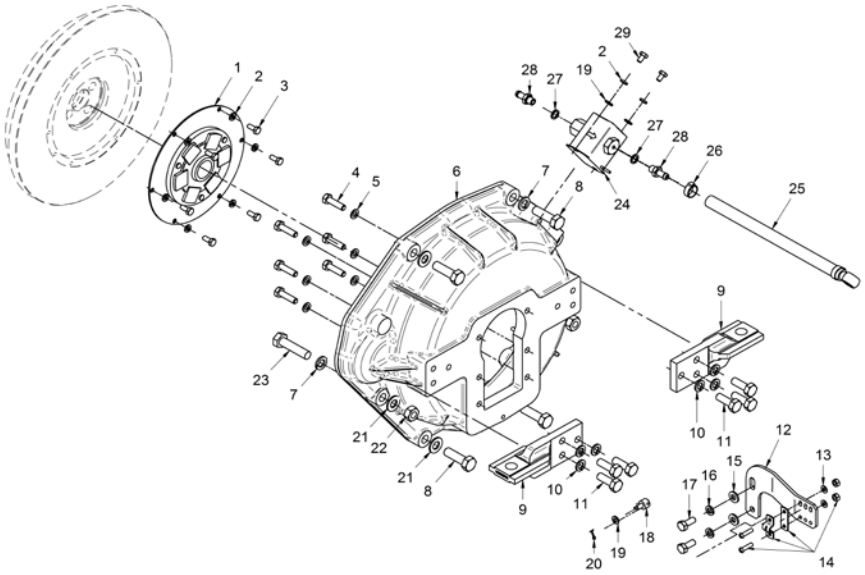

[NS] Not shown

Kit Gearbox

	17310243		Kit GearBox TTMC35		
FIG.	REF.	QTY	DESCR.	FROM	UPTO
1	17310070	1	Flexible Coupling Type A D. 185		
2	53033006	8	Washer GROWER DIN 127-6		
3	52102155	6	Bolt DIN 933 M6-12 8.8		
4	52101259	6	Bolt DIN 931 M8-30 8.8		
5	53038008	6	Washer DIN 6798-A 8		
6	17210009	1	Bell Housing,GearBox		
7	53033012	2	Washer GROWER DIN 127-12		
8	52202361	3	Bolt DIN 933 M12-1,25-40 8.8		
9	17210026	2	Rear Bracket	23/09/2014	
10	53033010	6	Washer GROWER DIN 127-10		
11	52102309	6	Bolt DIN 933 M10-30 8.8		
12	53038012	5	Washer DIN 6798-A 12		
13	52101363	2	Bolt DIN 931 M12-50 8.8		
14	52120012	2	Nut DIN 934 M12 8.8		
15	13814070	1	Electric Fuel Feed Pump 12V		
16	13814072	2	NIPPLE EYE		
17	57000361	2	Washer 10-14-1,5	01/06/2013	
18	52102154	2	Bolt DIN 933 M6-10 8.8		
19	51030006	2	Washer DIN 125-6		
20	54081008	1	Clamp DIN 3017 8-16 W4		
21	13814012	1	Pipe	25/09/2007	
NS	58088283	2	Pastic Cable Zip Tie [NS]	27/02/2014	
NS	60900126	1	TERMINAL [NS]		

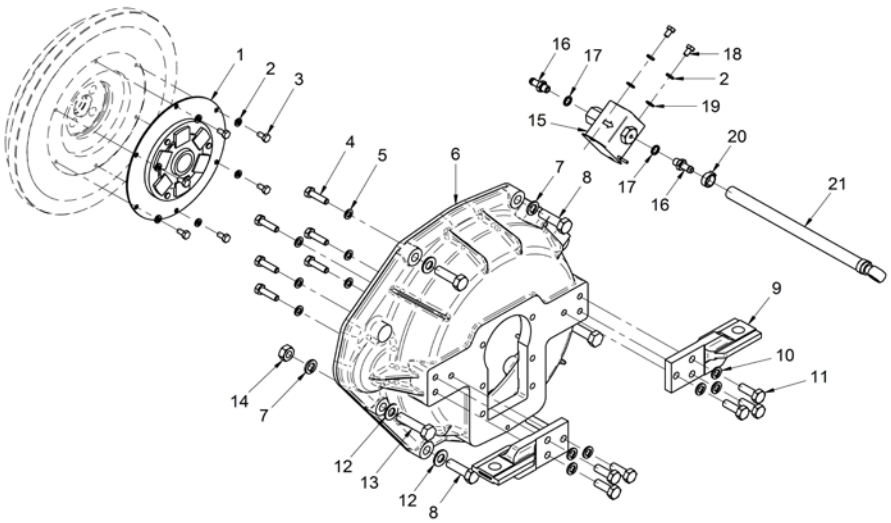

[NS] Not shown

Kit Gearbox

	17310244.4		Kit GearBox TMC-260		
FIG.	REF.	QTY	DESCR.	FROM	UPTO
1	17322027.4.1	1	Flywheel		
2	17210071	1	Flexible Coupling Type B SAE 6"1/2		
3	53038008	12	Washer DIN 6798-A 8		
4	52102257	8	Bolt DIN 933 M8-20 8.8		
5	13410018	1	SAE 7,adaptor flange		
6	17010003	1	Bracket		
7	53033012	6	Washer GROWER DIN 127-12		
8	52102359	4	Bolt DIN 933 M12-30 8.8		
9	22510012	1	Adaptor Flange "BW"		18/04/2017
10	53038010	6	Washer DIN 6798-A 10		
11	52102307	6	Bolt DIN 933 M10-20 8.8		
12	24880901	1	Bracket, GearBox Control		
13	51030005	2	Washer DIN 125-5		
14	24810913	1	Clamp,CABLE		
15	51030008	2	Washer DIN 125-8		
16	53033008	2	Washer GROWER DIN 127-8		
17	ALLPA.93	1	Coupling,cable	23/05/2017	
17	14719115	1	Coupling,cable		23/05/2017
18	51030006	6	Washer DIN 125-6		
19	51051107	1	Pin DIN-94 1,6-16		
20	52102258	6	Bolt DIN 933 M8-25 8.8		
21	17010004	1	Bracket		
22	52202359	3	Bolt DIN 933 M12-1,25-30 8.8		
23	53038012	3	Washer DIN 6798-A 12		
24	52102358	2	Bolt DIN 933 M12-25 8.8		
25	13814070	1	Electric Fuel Feed Pump 12V		
26	13814072	2	NIPPLE EYE		
27	57000361	2	Washer 10-14-1,5		
28	53033006	2	Washer GROWER DIN 127-6		
29	52102154	2	Bolt DIN 933 M6-10 8.8		
30	51086015	1	One Ear Clamp With Interior Ring		
31	13814012	1	Pipe		
NS	24890026	2	Cover [NS]	19/04/2017	
NS	58088283	2	Pastic Cable Zip Tie [NS]		
NS	60900126	1	TERMINAL [NS]		

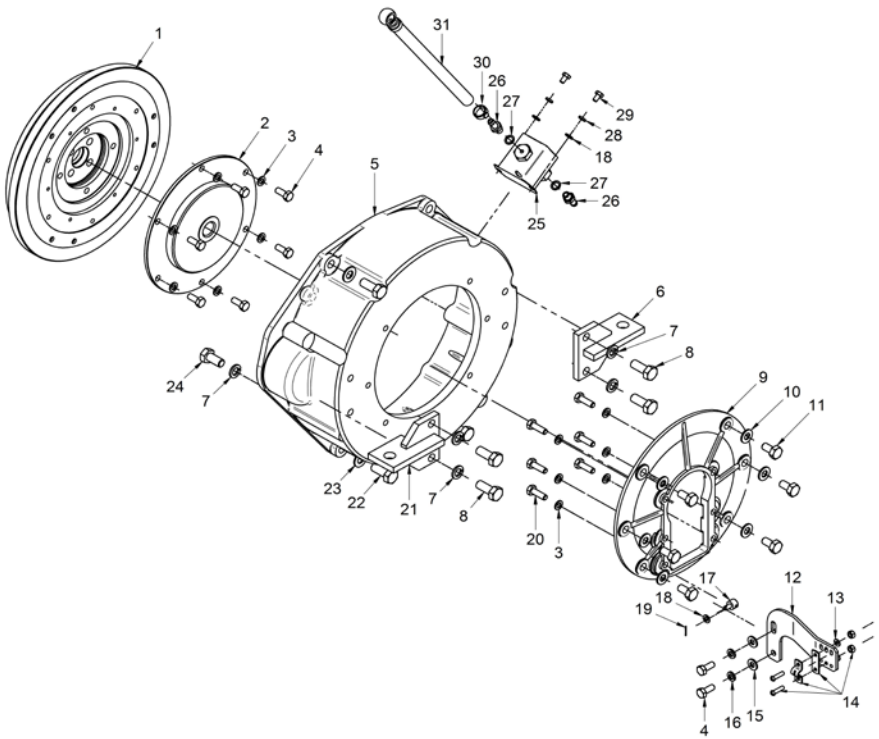

[NS] Not shown

Kit Gearbox

17332100A			Kit GearBox TMC-60/ZF/PRM		
FIG.	REF.	QTY	DESCR.	FROM	UPTO
1	17310070	1	Flexible Coupling Type A D. 185		
2	53033006	6	Washer GROWER DIN 127-6		
3	52102156	6	Bolt DIN 933 M6-16 8.8		
4	52101260	6	Bolt DIN 931 M8-35 8.8		
5	53038008	6	Washer DIN 6798-A 8		
6	17210009	1	Bell Housing,GearBox		
7	53033012	2	Washer GROWER DIN 127-12		
9	17210026	2	Rear Bracket	23/09/2014	
10	53033010	6	Washer GROWER DIN 127-10		
11	52102309	6	Bolt DIN 933 M10-30 8.8		
16	51030006	3	Washer DIN 125-6		
18	52202360	3	Bolt DIN 933 M12-1,25-35 8.8		
19	53038012	5	Washer DIN 6798-A 12		
20	52120012	2	Nut DIN 934 M12 8.8		
21	52101363	2	Bolt DIN 931 M12-50 8.8		
22	13814070	1	Electric Fuel Feed Pump 12V		
23	13814072	2	NIPPLE EYE		
24	57000361	2	Washer 10-14-1,5	01/06/2013	
25	52102154	2	Bolt DIN 933 M6-10 8.8		
26	51086015	1	One Ear Clamp With Interior Ring		
27	13814012	1	Pipe	25/09/2007	
NS	58088283	2	Pastic Cable Zip Tie [NS]	27/02/2014	
NS	58088284	1	Pastic Cable Zip Tie [NS]	05/06/2014	
NS	60900126	1	TERMINAL [NS]		

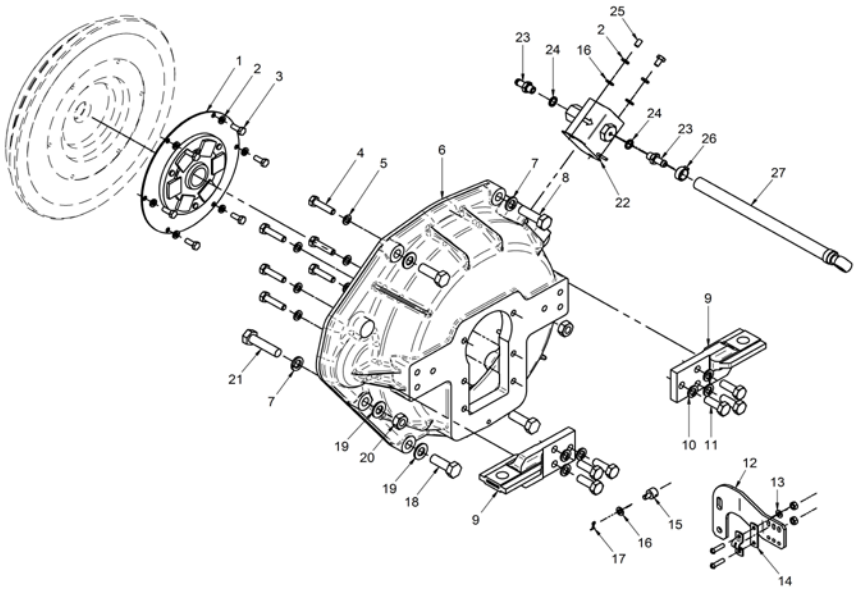

[NS] Not shown

Kit Gearbox

	17332100T		Kit S-Drive TECHNO.SP60		
FIG.	**REF.**	**QTY**	**DESCR.**	**FROM**	**UPTO**
1	17210044	1	Suplement,Flywheel		
2	17310070	1	Flexible Coupling Type A D. 185		
3	53033006	8	Washer GROWER DIN 127-6		
4	52101162	6	Bolt DIN 931 M6-45 8.8		
5	52102309	8	Bolt DIN 933 M10-30 8.8		
6	53038010	11	Washer DIN 6798-A 10		
7	17210013	1	Bell Housing		
8	53038012	4	Washer DIN 6798-A 12		
10	51030006	6	Washer DIN 125-6		
11	51051107	1	Pin DIN-94 1,6-16		
12	ALLPA.93	1	Coupling,cable	23/05/2017	
12	14719115	1	Coupling,cable		23/05/2017
13	24810913	1	Clamp,CABLE		
14	51030005	2	Washer DIN 125-5		
15	52101313	2	Bolt DIN 931 M10-50 8.8		
16	53038008	11	Washer DIN 6798-A 8		
17	52101263	8	Bolt DIN 931 M8-50 8.8		
18	40019030	3	Stud		
19	52120008	3	Nut DIN 934 M8 8.8		
20	17211036	1	Raccord		
21	13211035	1	Exhaust Manifold Outlet Bend		
22	54081020	2	Clamp DIN 3017 20-32/9 W4		
23	52202358	3	Bolt DIN 933 M12-1,25-25 8.8		
24	53033012	3	Washer GROWER DIN 127-12		
25	52102358	2	Bolt DIN 933 M12-25 8.8		
26	13814070	1	Electric Fuel Feed Pump 12V		
27	13814012	1	Pipe	25/09/2007	
28	51086015	1	One Ear Clamp With Interior Ring		
29	13814072	2	NIPPLE EYE		
30	57000361	2	Washer 10-14-1,5	01/06/2013	
31	52102154	2	Bolt DIN 933 M6-10 8.8		
32	17210005.1	2	Front Bracket		
NS	M87501927	1	Water Intake Hose (HQ) D. 19-27 [NS]		
NS	58088282	2	Pastic Cable Zip Tie [NS]	17/01/2014	
NS	60121005	1	Water Trainer 1/2" [NS]		

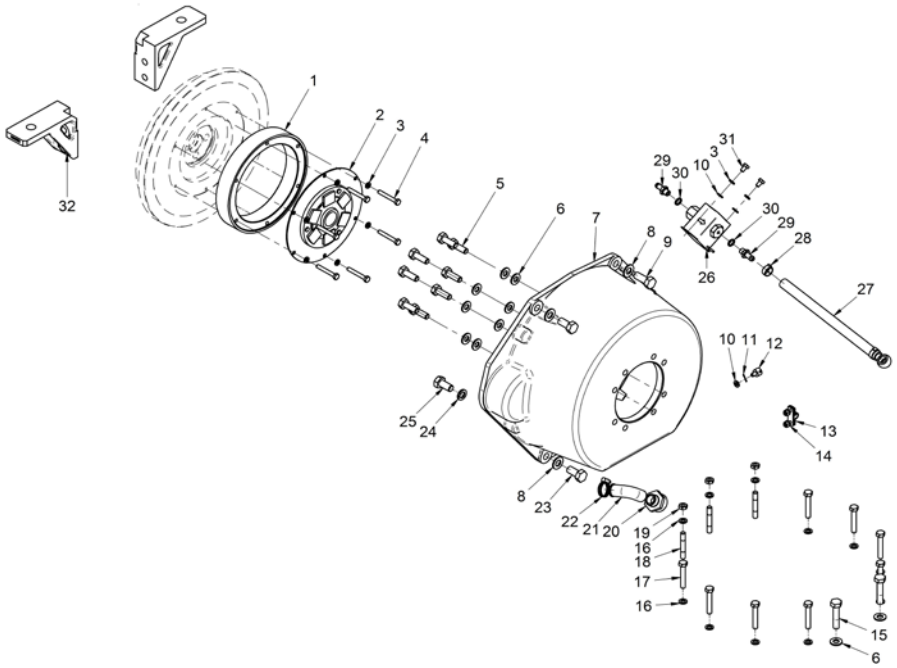

[NS] Not shown

Kit Gearbox

	17332100T		Kit S-Drive TECHNO.SP60		
FIG.	**REF.**	**QTY**	**DESCR.**	**FROM**	**UPTO**
NS	60900126	1	TERMINAL [NS]		

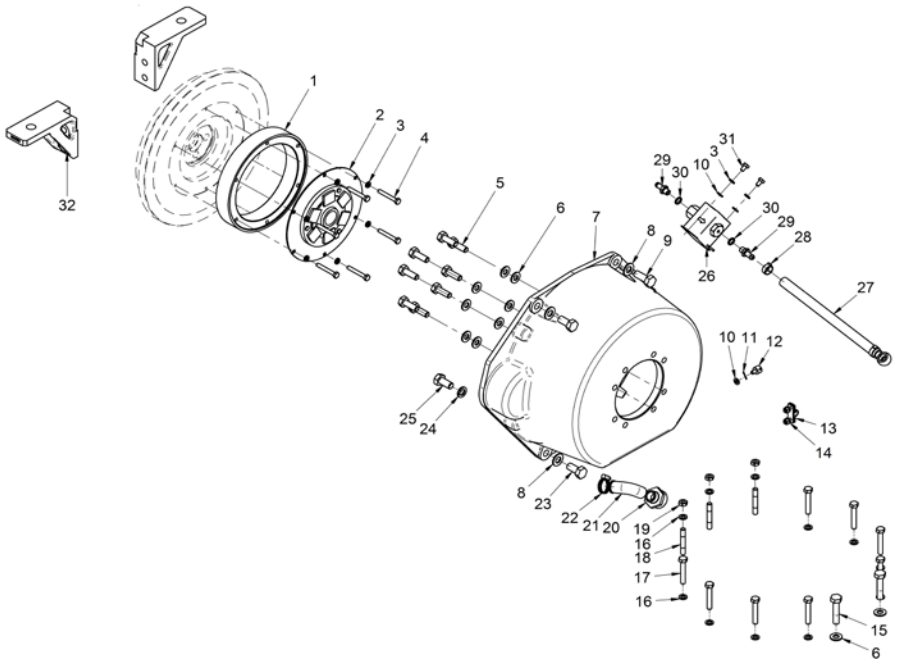

Kit Gearbox

	17332101		Kit GearBox TMC-260		
FIG.	REF.	QTY	DESCR.	FROM	UPTO
1	17322027.4.1	1	Flywheel		
2	17210071	1	Flexible Coupling Type B SAE 6"1/2		
3	53038008	12	Washer DIN 6798-A 8		
4	52102257	8	Bolt DIN 933 M8-20 8.8		
5	13410018	1	SAE 7,adaptor flange		
6	17010003	1	Bracket		
7	53033012	6	Washer GROWER DIN 127-12		
8	52102359	4	Bolt DIN 933 M12-30 8.8		
9	22510012	1	Adaptor Flange "BW"		
10	53038010	6	Washer DIN 6798-A 10		
11	52102307	6	Bolt DIN 933 M10-20 8.8		
12	52102358	2	Bolt DIN 933 M12-25 8.8		
13	17010004	1	Bracket		
14	52202359	3	Bolt DIN 933 M12-1,25-30 8.8		
15	53038012	3	Washer DIN 6798-A 12		
16	52102258	6	Bolt DIN 933 M8-25 8.8		
17	13814070	1	Electric Fuel Feed Pump 12V		
18	13814072	2	NIPPLE EYE		
19	57000361	2	Washer 10-14-1,5	01/06/2013	
20	51030006	2	Washer DIN 125-6		
21	52102154	2	Bolt DIN 933 M6-10 8.8		
22	51086015	1	One Ear Clamp With Interior Ring		
23	13814012	1	Pipe	25/09/2007	
NS	58088283	2	Pastic Cable Zip Tie [NS]	27/02/2014	
NS	60900126	1	TERMINAL [NS]		

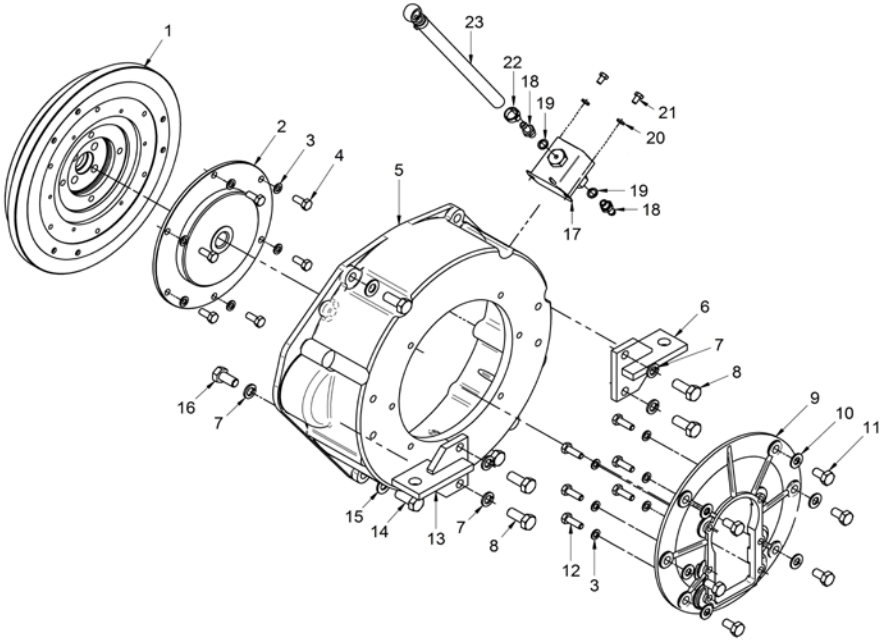

[NS] Not shown

Electrical System

17214060			Kit SOLAS 12V With Capsizing Sensor		
FIG.	REF.	QTY	DESCR.	FROM	UPTO
1	17217001.2	1	Bracket Relay		
2	60900091	1	MICRO Relay 12V 12-20		
3	51030005	1	Washer DIN 125-5		
4	52102104	1	Bolt DIN 933 M5-10 8.8		
5	17221007	1	Breather, Pipe		
6	17221008	1	Breather, Pipe		
NS	52102160	1	Bolt DIN 933 M6-35 8.8 [NS]		
NS	52115303	1	Bolt DIN 551 M10-8 8.8 [NS]		
NS	60900152	1	Wire [NS]		
NS	60972200R.1V	1	MINI-33/44/55 SOLAS Electrical Wiring [NS]		13/04/2016
NS	60972202	1	Wiring Electrical SOLAS MINI33/44/55 SVT [NS]	13/04/2016	
NS	60972203V	1	SOLAS Spill Detector Electrical Wiring [NS]		

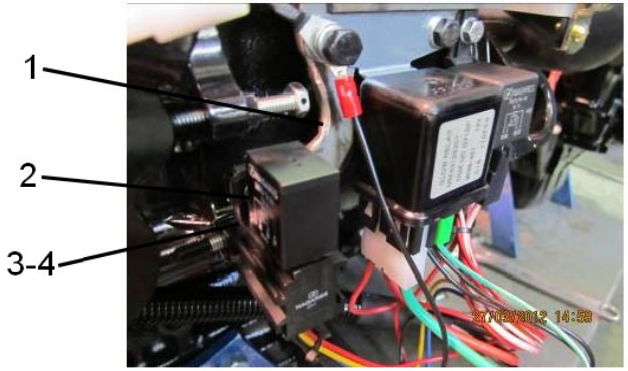

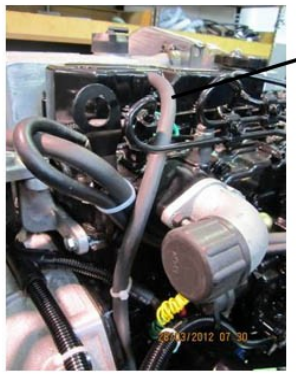

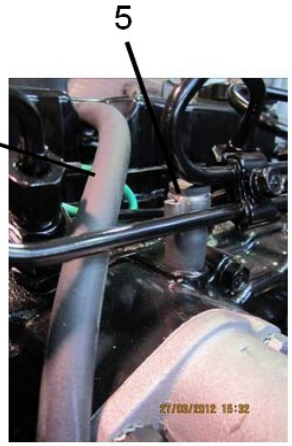

[NS] Not shown

	17214060B		Kit Isolated SOLAS		
FIG.	REF.	QTY	DESCR.	FROM	UPTO
1	19017104	1	Relay 12 V. Bipolar		19/06/2017
1	19017113	1	Relay 12 V, Earth Isolated	20/06/2017	
2	17317003	1	Support, Relay	20/06/2017	
2	60572701	1	Support, Relay		19/06/2017
3	52102154	2	Bolt DIN 933 M6-10 8.8		
4	51030006	4	Washer DIN 125-6		
5	52202359	2	Bolt DIN 933 M12-1,25-30 8.8		
7	13019001	2	Clamp		
8	60900972	1	High Coolant, 2 Poles		
9	60900999	2	Connection M14X1,5 5/8" EXA.22 L=22		
10	56000073	2	Copper Washer 16-23-1,5		
11	60900982	1	Temperature SENDER		
12	52120008	1	Nut DIN 934 M8 8.8		
13	17417014	2	Washer		
14	52120006	1	Nut DIN 934 M6 8.8		
15	17417010	2	Bakelite Bushing		
16	51030012	2	Washer DIN 125-12		
17	53033006	1	Washer GROWER DIN 127-6		
18	17217011	2	Bracket Bakelite Bushing		
19	15119015	1	CABLE Holder Ball		
20	17117016B.2	1	Alt. 14V/95A		
21	56000069	1	Washer 14-20-1,5		
22	14419023	1	Ball JOINT		
23	51030008	1	Washer DIN 125-8		
24	17227007.4B	1	Plate		
25	17217018	1	Spacer 10,5x25x25		
26	53033008	1	Washer GROWER DIN 127-8		
27	TR.10.8	1	Ring Terminal 10 Sec.		
28	TFM.6.3.T.5.I	1	Straight Receptacle 6.3 Faston		
29	17217012	2	Tensor Bakelite Bushing		
30	52101325	1	Bolt DIN 931 M10-120 8.8		
31	51031008	2	Washer DIN 9021 8		
32	60900978	1	Switch, Oil Press		
33	51030010	1	Washer DIN 125-10		
34	17417025	1	Spacer 13.5x10.2x11	09/09/2015	

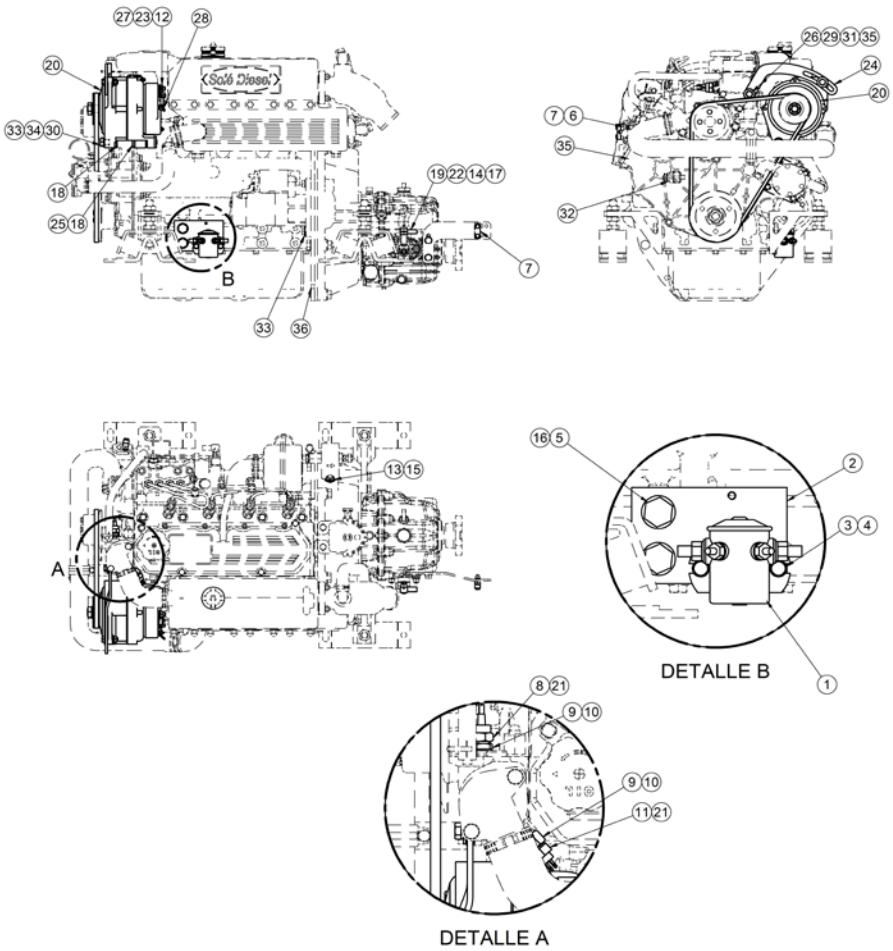

[NS] Not shown

17214060B			Kit Isolated SOLAS		
FIG.	REF.	QTY	DESCR.	FROM	UPTO
35	52101267	1	Bolt DIN 931 M8-70 8.8		
NS	60900151	1	Wire [NS]		
NS	60900154	1	Wire [NS]		
NS	60900155	1	Wire [NS]		
NS	60972048	1	MASS BLACK TO Wiring START [NS]		
NS	60972202R.2V	1	MINI33/44/55 E.Wiring E.Isolated SOLAS [NS]		13/04/2016
NS	60972203	1	Wir. Elect. SOLAS Isol. MINI33/44/55 SVT [NS]	13/04/2016	

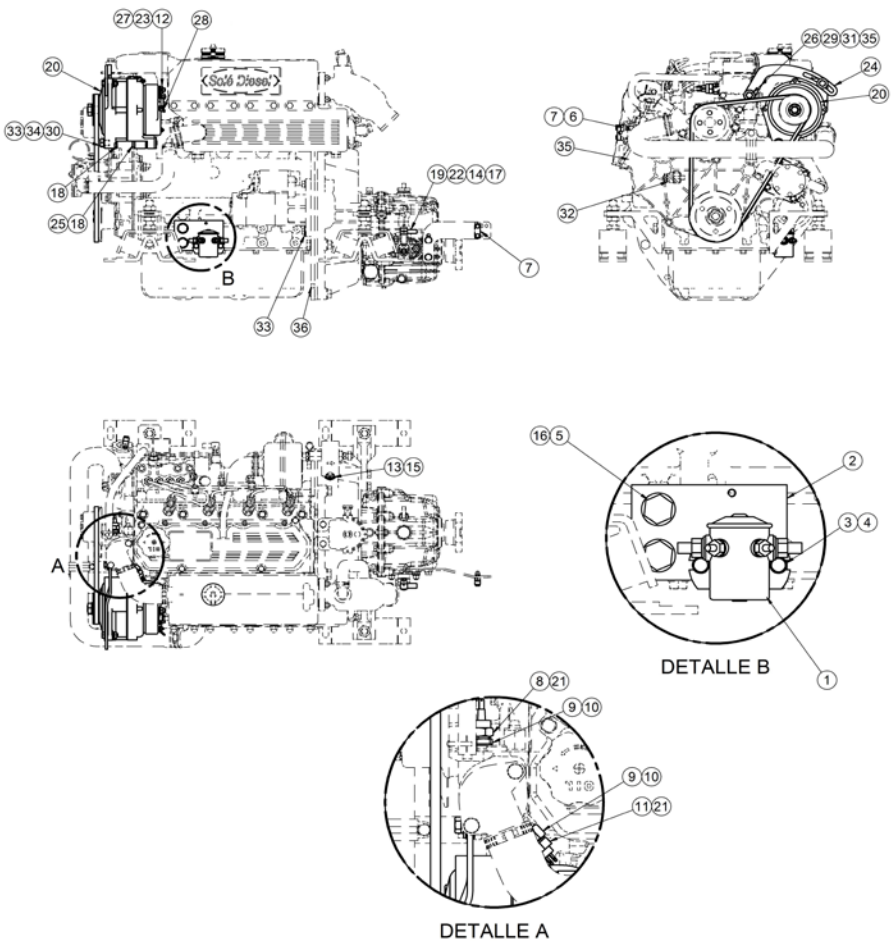

	17217102		Kit 2nd Alternator 28V/55A		
FIG.	REF.	QTY	DESCR.	FROM	UPTO
1	13110202	1	Pulley 2A (S)		
2	17210004	2	Bracket,Front		
2	17210004.1	2	Bracket, Front	18/11/2014	
3	17217102.3	1	Bracket, Alternator		
4	17217102.5	1	Plate		
5	17217102.6	1	Belt Type AX 21		
6	17417020	1	Pulley Alternator		
7	17417027	1	Alt. 28V/55A Mahle	16/03/2016	
8	18017021	1	PAN,alternator L.H.		
9	51030008	2	Washer DIN 125-8		
10	51030010	1	Washer DIN 125-10		
11	51030012	5	Washer DIN 125-12		
12	52101376	1	Bolt DIN 931 M12-130 8.8		
13	52102257	2	Bolt DIN 933 M8-20 8.8		
14	52102309	1	Bolt DIN 933 M10-30 8.8		
15	52120010	1	Nut DIN 934 M10 8.8		
16	52120012	1	Nut DIN 934 M12 8.8		
17	52202361	4	Bolt DIN 933 M12-1,25-40 8.8		
18	53033008	2	Washer GROWER DIN 127-8		
19	53033010	1	Washer GROWER DIN 127-10		
20	53033012	1	Washer GROWER DIN 127-12		

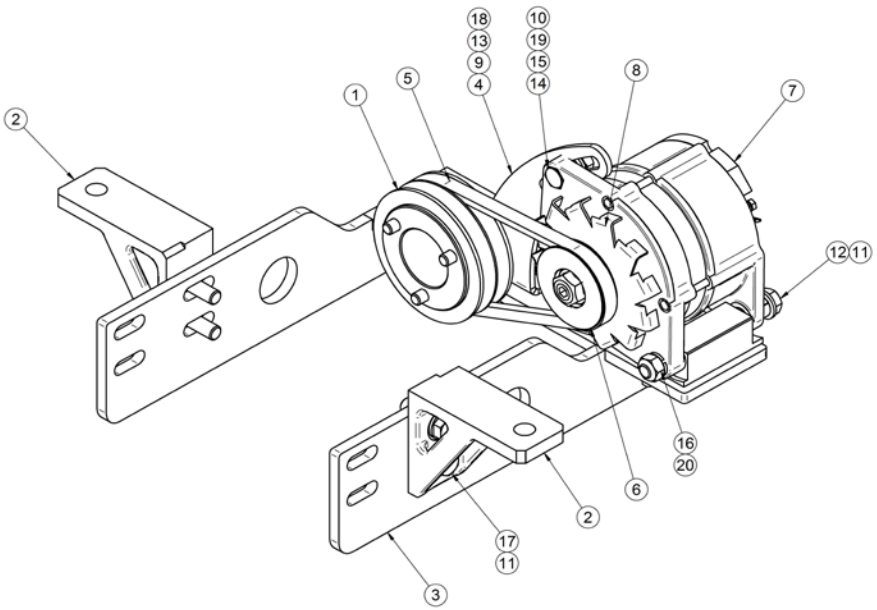

	17217103		Kit 2nd Alternator 14V/90A		
FIG.	REF.	QTY	DESCR.	FROM	UPTO
1	13110202	1	Pulley 2A (S)		
2	17210004.1	2	Bracket, Front	18/11/2014	
3	17217019	1	Alternator 14V/90A		
4	17217102.6	1	Belt Type AX 21		
5	17217103.1	1	Plate		
6	17217103.3	1	Bracket, Alternator		
7	17417020	1	Pulley Alternator		
8	51030008	3	Washer DIN 125-8		
9	51030010	2	Washer DIN 125-10		
10	51030012	8	Washer DIN 125-12		
11	51031008	1	Washer DIN 9021 8		
12	52101326	1	Bolt DIN 931 M10-130 8.8		
13	52102256	2	Bolt DIN 933 M8-15 8.8		
14	52102259	1	Bolt DIN 933 M8-30 8.8		
15	52120008	1	Nut DIN 934 M8 8.8		
16	52120010	1	Nut DIN 934 M10 8.8		
17	52202358	4	Bolt DIN 933 M12-1,25-25 8.8		
18	52202361	4	Bolt DIN 933 M12-1,25-40 8.8		
19	53033008	3	Washer GROWER DIN 127-8		
20	53033010	1	Washer GROWER DIN 127-10		
NS	13817016	1	Spacer 17X28X4 [NS]		
NS	53033016C	1	Washer [NS]		

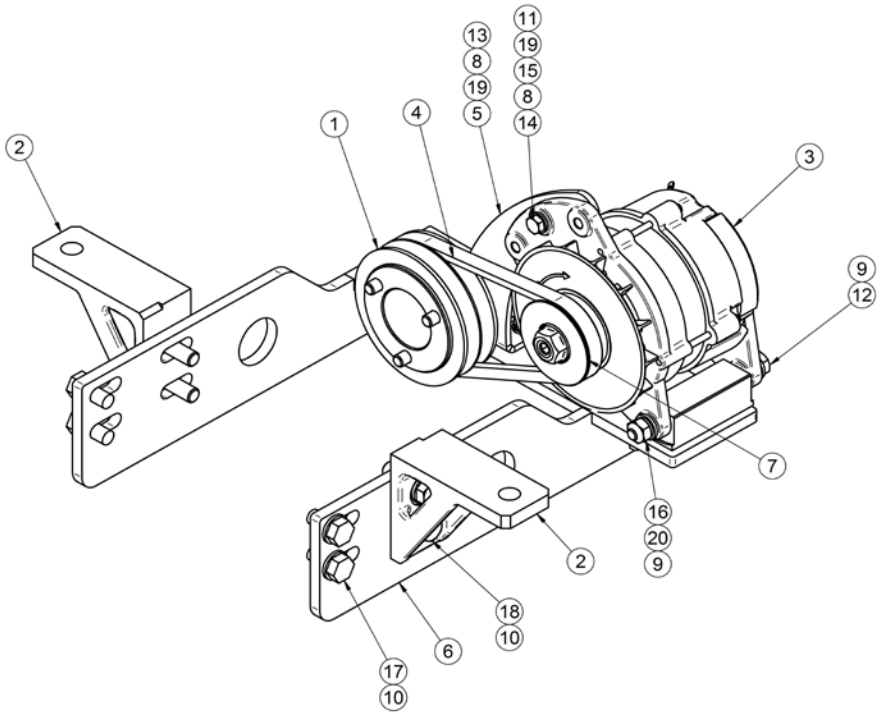

[NS] Not shown

17217200			Kit Wire Earth Isolated Alternator 14V/9		
FIG.	REF.	QTY	DESCR.	FROM	UPTO
1	19017104	1	Relay 12 V. Bipolar		19/06/2017
1	19017113	1	Relay 12 V, Earth Isolated	20/06/2017	
2	17317003	1	Support, Relay	20/06/2017	
2	60572701	1	Support, Relay		19/06/2017
3	52102154	2	Bolt DIN 933 M6-10 8.8		
4	51030006	2	Washer DIN 125-6		
5	52202359	2	Bolt DIN 933 M12-1,25-30 8.8		
6	60900987	1	Sender, Oil Press.		
7	13019001	2	Clamp		
8	60900972	1	High Coolant, 2 Poles		
9	60900999	2	Connection M14X1,5 5/8" EXA.22 L=22		
10	56000073	2	Copper Washer 16-23-1,5		
11	60900982	1	Temperature SENDER		
13	17417014	2	Washer		
15	17417010	2	Bakelite Bushing		
16	51030012	2	Washer DIN 125-12		
18	17217011	2	Bracket Bakelite Bushing		
19	15119015	1	CABLE Holder Ball		
20	17117016B.2	1	Alt. 14V/95A		
21	56000069	1	Washer 14-20-1,5		
22	14419023	1	Ball JOINT		
24	17227007.4B	1	Plate		
28	TFM.6.3.T.5.I	2	Straight Receptacle 6.3 Faston		
29	17217012	2	Tensor Bakelite Bushing		
31	51031008	1	Washer DIN 9021 8		
32	60900978	1	Switch, Oil Press		
35	17217018	1	Spacer 10,5x25x25		
36	17117052	1	Oil Pressure Sensor Adaptor	29/09/2015	
NS	TFH.1M.6.3.08	2	Straight Receptacle 1 Sec. Faston [NS]	15/01/2018	
NS	51030010	1	Washer DIN 125-10 [NS]		
NS	53033006	1	Washer GROWER DIN 127-6 [NS]		
NS	60900063	2	Insulator Cap Faston 6.3 [NS]	15/01/2018	
NS	60900126	1	TERMINAL [NS]		
NS	60900152	1	Wire [NS]		
NS	60900155	1	Wire [NS]		

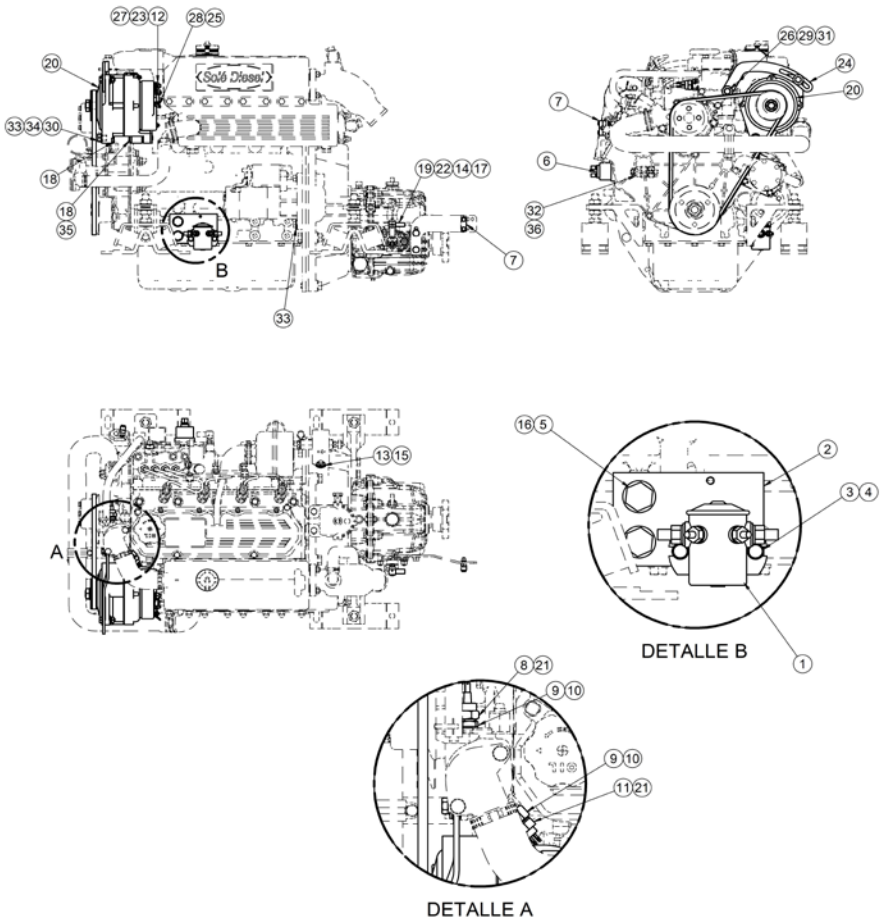

[NS] Not shown

17217200			Kit Wire Earth Isolated Alternator 14V/9		
FIG.	REF.	QTY	DESCR.	FROM	UPTO
NS	60900158	2	Terminal Tubular Sleeve (1.5) [NS]	15/01/2018	
NS	60972048	1	MASS BLACK TO Wiring START [NS]		
NS	60972201	1	Wir. Elect. Isolated MINI-33/44/55 SVT [NS]	13/04/2016	
NS	60972202R.2	1	MINI-33/44/55 E. Wiring EARTH ISOLATED [NS]		13/04/2016

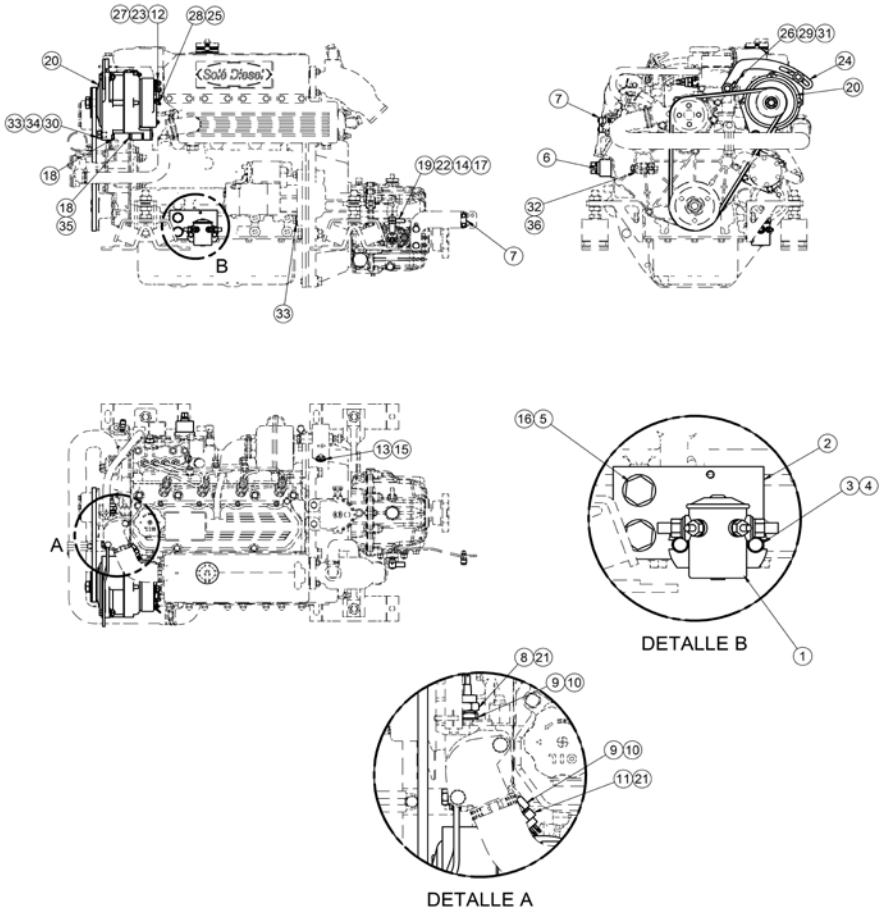

17317209			Kit 24V Engine Elec. System & SVT 30 V.3		
FIG.	REF.	QTY	DESCR.	FROM	UPTO
	TFH.1M.6.3.08	1	Straight Receptacle 1 Sec. Faston		
	TR.4.6	2	Ring Terminal 4 Sec.		
	TR.6.6	1	Ring Terminal 6 Sec.		
	13814072	2	NIPPLE EYE		
	13817012.7	1	Pulley		
	13824025.2	1	Stop SOLENOID 24V-ETS		
	17117002	1	Spacer 8,5X20X5		
	17117052	1	Oil Pressure Sensor Adaptor		
	17217014	1	Plate		
	17227017.2	4	Glow Plug 24V		
	17327001.2	1	Starter Assy 24V		
	17417005	1	Relay 24V 24-100		
	17417005.1	1	Relay 24V 24-22A		
	17417024	1	Alternator 28V/55A		
	19014070	1	Pump 24V.		
	51030006	1	Washer DIN 125-6		
	51030008	2	Washer DIN 125-8		
	51030010	2	Washer DIN 125-10		
	52101268	1	Bolt DIN 931 M8-75 8.8		
	52105156	1	Bolt DIN 7991 M6-15 10.9		17/07/2017
	52120010	1	Nut DIN 934 M10 8.8		
	53033008	1	Washer GROWER DIN 127-8		
	53033010	1	Washer GROWER DIN 127-10		
	57000361	1	Washer 10-14-1,5		
	60900063	1	Insulator Cap Faston 6.3		
	60900985	1	Pressure Sensor		
	60972134	1	SVT 30 MINI-33/44/55 24V Panel		

IMAGEN DISPONIBLE PRÓXIMAMENTE
IMAGE AVAILABLE COMING SOON

17317210			Kit 24V Engine Electrical System v3		
FIG.	REF.	QTY	DESCR.	FROM	UPTO
	TR.4.6	2	Ring Terminal 4 Sec.		
	TR.6.6	1	Ring Terminal 6 Sec.		
	13814072	2	NIPPLE EYE		
	13817012.7	1	Pulley		
	13824025.2	1	Stop SOLENOID 24V-ETS		
	17117002	1	Spacer 8,5X20X5		
	17217014	1	Plate		
	17227017.2	4	Glow Plug 24V		
	17327001.2	1	Starter Assy 24V		
	17417005	1	Relay 24V 24-100		
	17417005.1	1	Relay 24V 24-22A		
	17417024	1	Alternator 28V/55A		
	19014070	1	Pump 24V.		
	51030006	1	Washer DIN 125-6		
	51030008	2	Washer DIN 125-8		
	51030010	2	Washer DIN 125-10		
	52101268	1	Bolt DIN 931 M8-75 8.8		
	52105156	1	Bolt DIN 7991 M6-15 10.9		17/07/2017
	52120010	1	Nut DIN 934 M10 8.8		
	53033008	1	Washer GROWER DIN 127-8		
	53033010	1	Washer GROWER DIN 127-10		
	57000361	1	Washer 10-14-1,5		
	60973130	1	SVT 20 MINI-33/44/55 24V Panel		

IMAGEN DISPONIBLE PRÓXIMAMENTE
IMAGE AVAILABLE COMING SOON

24813510			Kit Water Leak Sensor & Alarm SP60 12V		
FIG.	REF.	QTY	DESCR.	FROM	UPTO
1	60938203	1	SPROP60 Water SYStem Alarm SYSTEM		
2	24813504	1	Water Alarm Sensor		

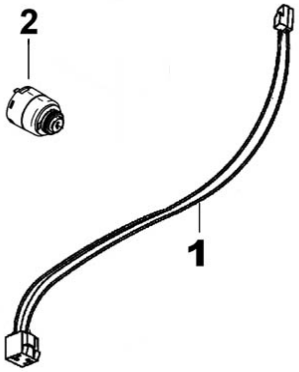

	13410019C		SAE 5,Adaptor Flange		
FIG.	REF.	QTY	DESCR.	FROM	UPTO
1	13410019	1	SAE 5,adaptor flange		
2	53038012	3	Washer DIN 6798-A 12		
3	53033012	2	Washer GROWER DIN 127-12		
4	52102358	2	Bolt DIN 933 M12-25 8.8		
5	52202359	3	Bolt DIN 933 M12-1,25-30 8.8		

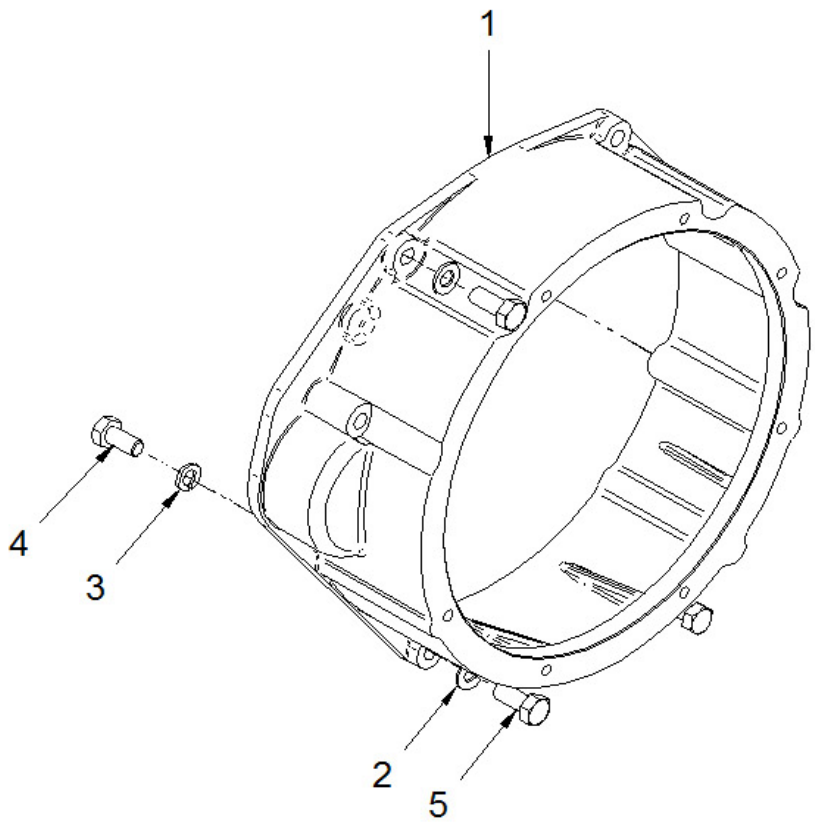

Other Kits

	13812010		Pressure Gauge Kit 10 BAR		
FIG.	REF.	QTY	DESCR.	FROM	UPTO
1	13812013.1	1	Pressure Tap		
2	13812011	1	Flexible Hose F-M G1/4-M16x2		
3	13812012	1	Pressure Gauge 0-10 bar		
4	13812014	1	Protective Rubber		

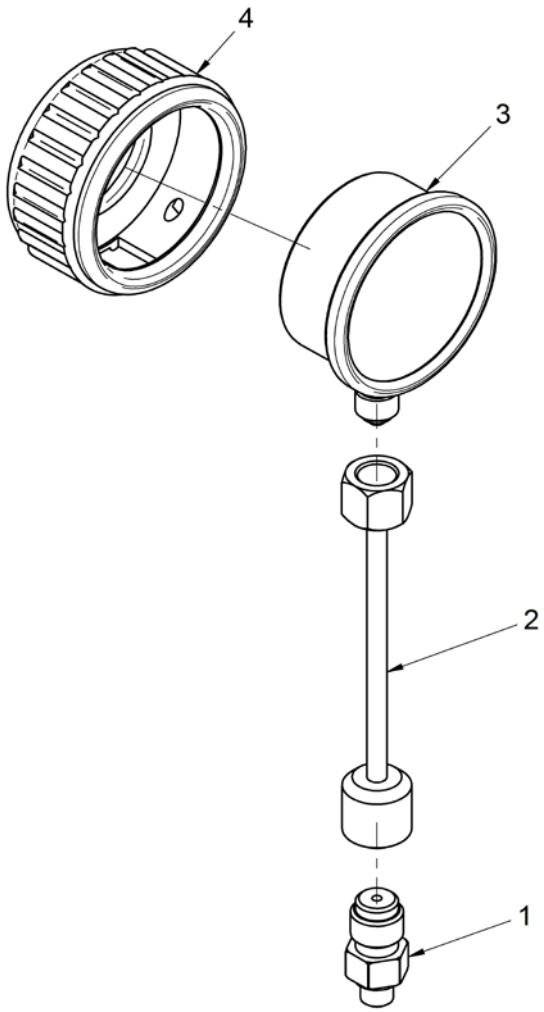

Other Kits

	17012093		Kit Trolling Valve for TM-93/A		
FIG.	REF.	QTY	DESCR.	FROM	UPTO
1	24810050	1	Trolling Valve TM-93		
2	24810913	1	Clamp,CABLE		
3	51030005	2	Washer DIN 125-5		
4	57000375	6	Washer 17-22-1,5		
5	14712015	3	Bolt,Coupling pipe oil		
6	14719115	2	Coupling,cable		
7	51030006	4	Washer DIN 125-6		
8	51051107	2	Pin DIN-94 1,6-16		
NS	17112024	2	Pipe, rev.oil Cooler [NS]		

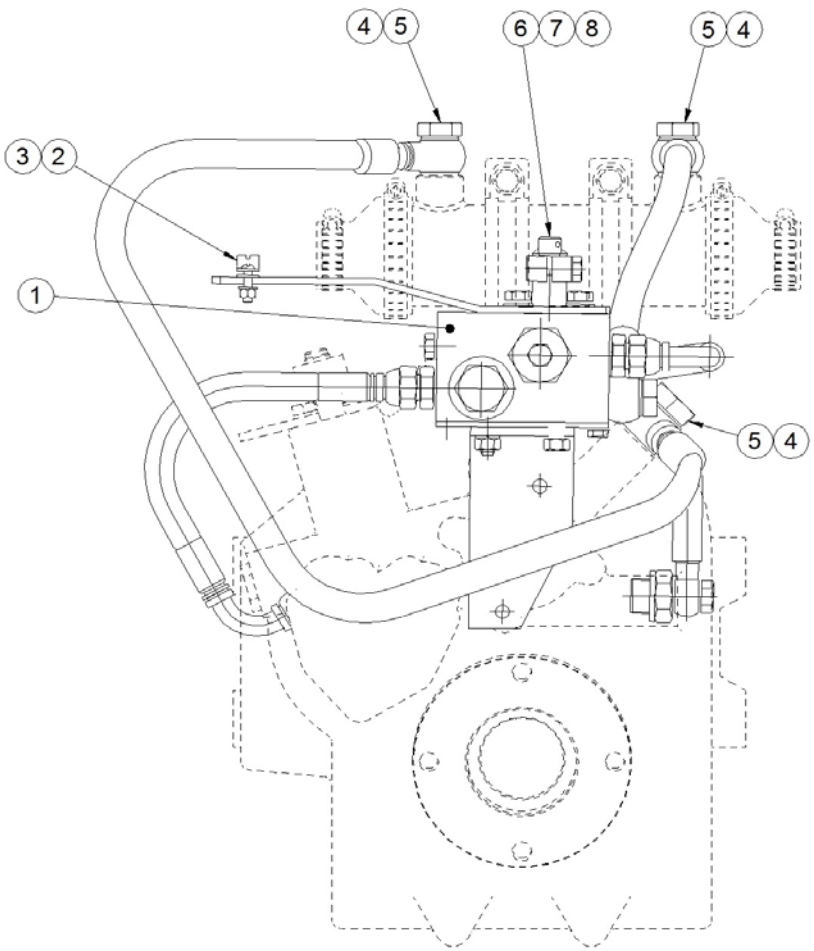

[NS] Not shown

Other Kits

	17012345		Kit Trolling Valve for TM-345/A		
FIG.	REF.	QTY	DESCR.	FROM	UPTO
1	24850050	1	Trolling Valve TM-345A		
2	17012024	1	Pipe		
3	17512017	1	Pipe, rev.oil Cooler		
4	14712015	2	Bolt,Coupling pipe oil		
5	57000375	4	Washer 17-22-1,5		
6	24810913	1	Clamp,CABLE		
7	14719115	2	Coupling,cable		
8	51051107	2	Pin DIN-94 1,6-16		
9	51030006	1	Washer DIN 125-6		
10	51030005	2	Washer DIN 125-5		

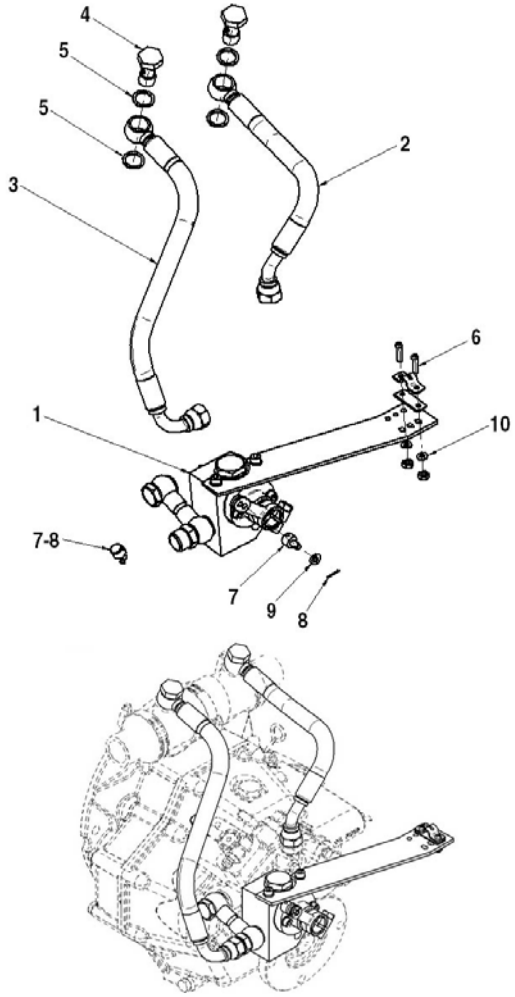

	17210031		Motor Bracket Width 195		
FIG.	REF.	QTY	DESCR.	FROM	UPTO
1	17210001.7	2	Bracket, Front (Width 195)		
2	17210010.2	2	Bracket, Rear (Width 195)		

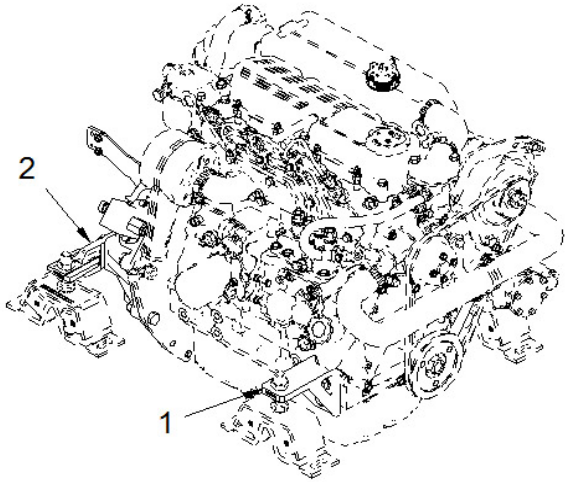

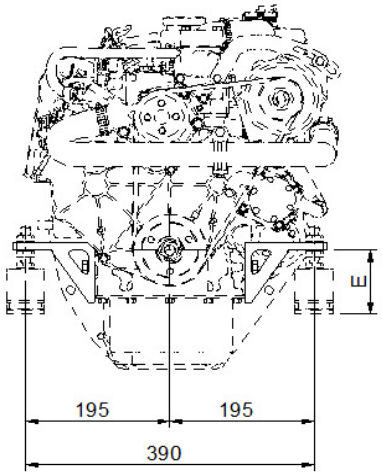

Other Kits

	17210032		Motor Bracket Width 205		
FIG.	**REF.**	**QTY**	**DESCR.**	**FROM**	**UPTO**
1	17210028.3	2	Bracket, Front (Width 205)	19/05/2016	
2	17210026.1	2	Bracket, Rear (Width 205)	19/05/2016	

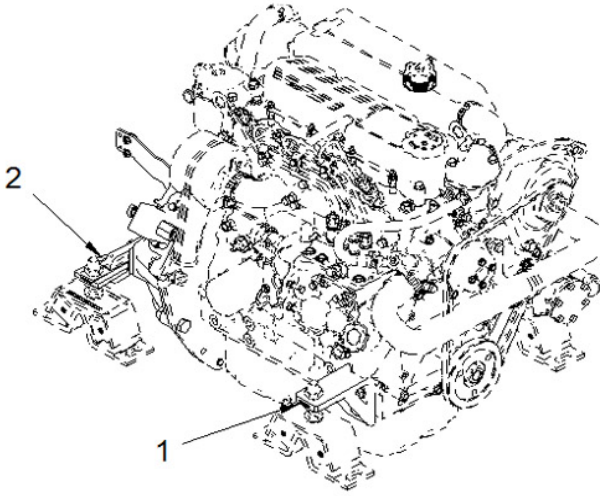

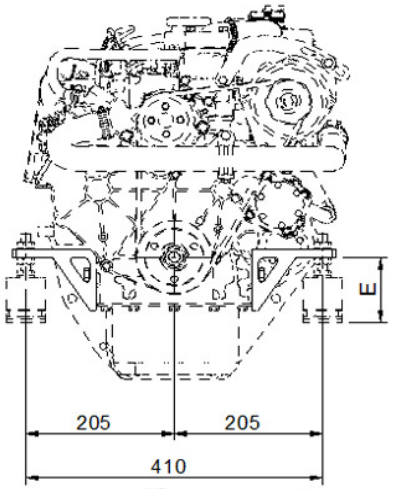

Other Kits

	17210033		Motor Bracket Width 220		
FIG.	**REF.**	**QTY**	**DESCR.**	**FROM**	**UPTO**
1	17210001.9	2	Bracket, Front (Width 220)		
2	17210010.4	2	Bracket, Rear (Width 220)		

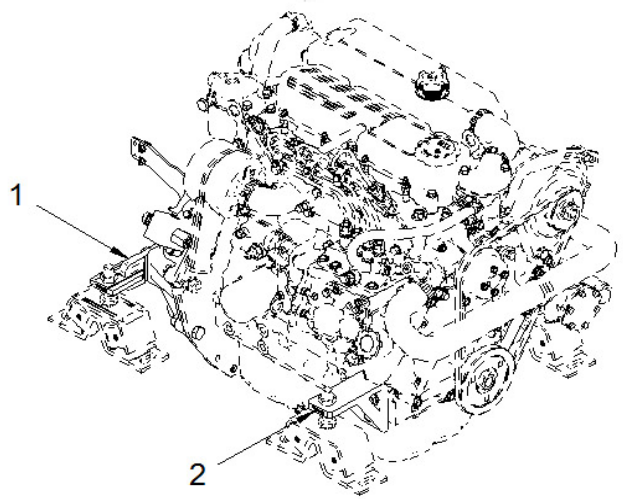

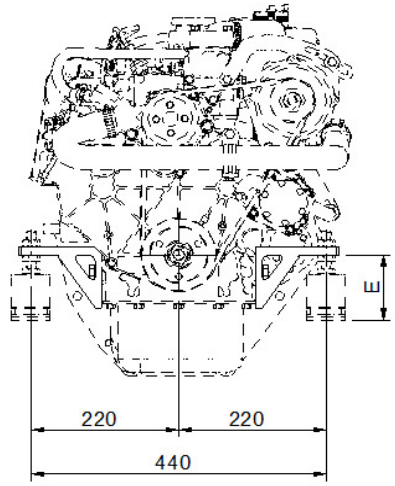

Other Kits

	17210127		Kit Pump LEDUC XP25		
FIG.	REF.	QTY	DESCR.	FROM	UPTO
1	17322027.1MEC	1	----------		
2	17210027	1	Suplement,Flywheel SAE 6,5		
3	52103159	6	Bolt DIN 912 M6-30 8.8		
3	53038008	6	Washer DIN 6798-A 8		
4	17210075	1	Flexible Coupling CENTAFLEX		
5	52101264	6	Bolt DIN 931 M8-55 8.8		
6	13410018	1	SAE 7,adaptor flange		
7	53038012	5	Washer DIN 6798-A 12		
8	53033012	7	Washer GROWER DIN 127-12		
9	52202359	5	Bolt DIN 933 M12-1,25-30 8.8		
10	17010003	1	Bracket		
11	51030010	10	Washer DIN 125-10		
12	53033010	10	Washer GROWER DIN 127-10		
13	52102310	4	Bolt DIN 933 M10-35 8.8		
14	17210023	1	Flange, LEDUC SAE 7 Pump		
15	52102308	6	Bolt DIN 933 M10-25 8.8		
16	51030012	4	Washer DIN 125-12		
18	17010004	1	Bracket		

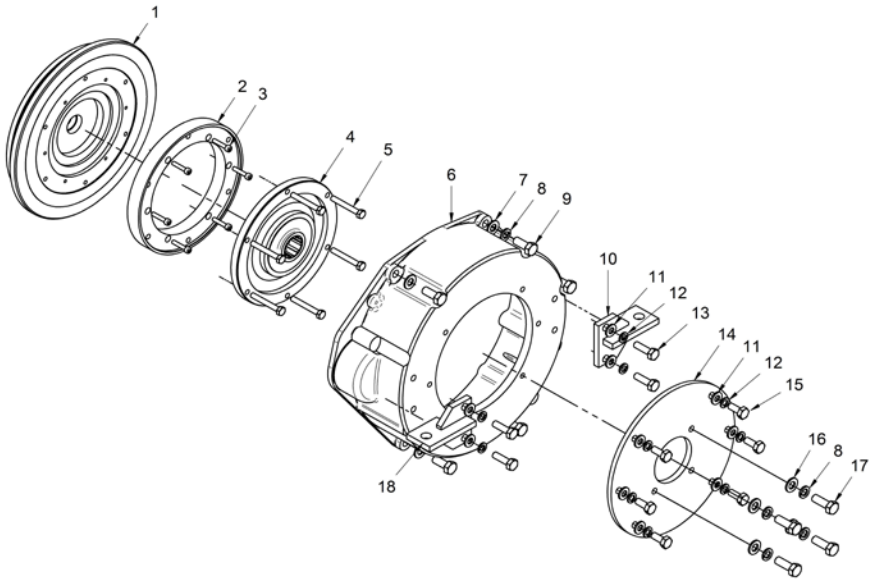

Other Kits

	17210127.4		Kit Bobtail SAE-7		
FIG.	REF.	QTY	DESCR.	FROM	UPTO
1	13410018	1	SAE 7,adaptor flange		
2	17210028	2	Bracket, Front	08/10/2014	
3	17210003	1	Bracket, Engine Auxiliar		02/07/2017
4	13814070	1	Electric Fuel Feed Pump 12V		
5	13814012	1	Pipe		
6	53033006	2	Washer GROWER DIN 127-6		
7	52102154	2	Bolt DIN 933 M6-10 8.8		
8	51086015	1	One Ear Clamp With Interior Ring		
9	57000361	2	Washer 10-14-1,5		
10	13814072	2	NIPPLE EYE		
12	52202359	7	Bolt DIN 933 M12-1,25-30 8.8		
14	53033012	6	Washer GROWER DIN 127-12		
NS	52202361	3	Bolt DIN 933 M12-1,25-40 8.8 [NS]		
NS	53038012	6	Washer DIN 6798-A 12 [NS]		
NS	60900126	1	TERMINAL [NS]		

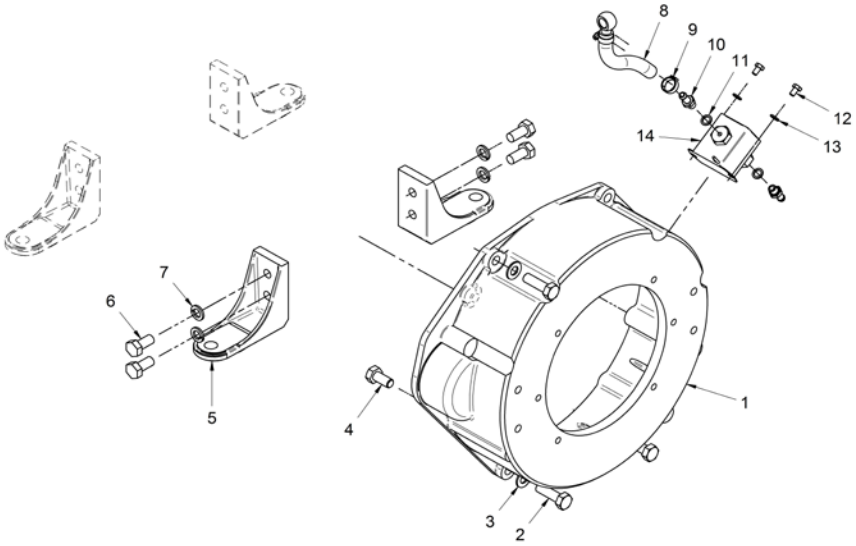

[NS] Not shown

	17211150		Boiler Kit (S)		
FIG.	REF.	QTY	DESCR.	FROM	UPTO
1	17124053	2	Joint		

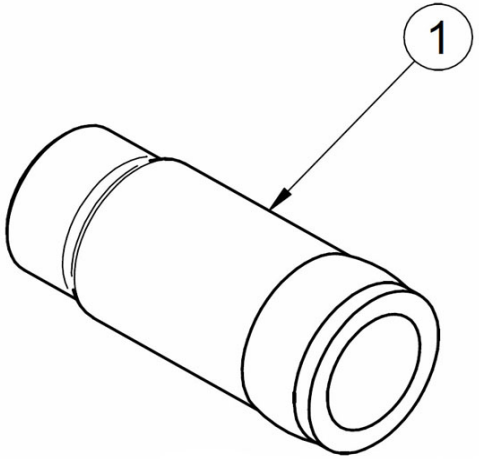

Other Kits

	17610212		Kit Cooler Assy TMC-60		
FIG.	REF.	QTY	DESCR.	FROM	UPTO
1	24880107	1	Kit Oil Cooler TMC-60 D.25		
2	54081016	2	Clamp DIN 3017 16-27/9 W4		
3	52102156	1	Bolt DIN 933 M6-16 8.8		
4	51030006	1	Washer DIN 125-6		
5	59071304	1	Clamp RSGU 1 30/15 W1		
6	13817011	1	Bracket		
7	51031006	1	Washer DIN 9021 6		
8	52120006	1	Nut DIN 934 M6 8.8		
9	17111012	2	Coupling		
10	60371055	2	Hose Connection 1" x 20		
NS	M87501927	1	Water Intake Hose (HQ) D. 19-27 [NS]		
NS	58088280	1	Pastic Cable Zip Tie [NS]		

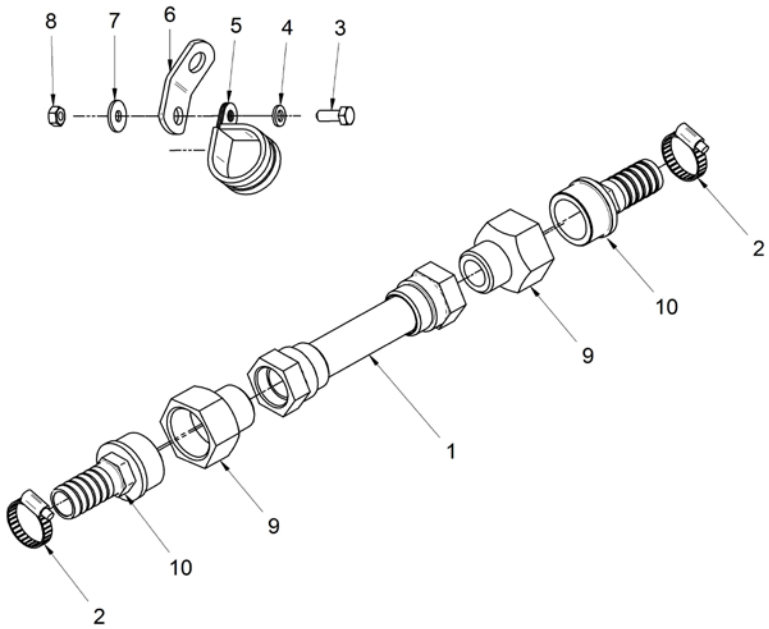

[NS] Not shown

Exhaust System

	13413015		Exhaust Flange (S)		
FIG.	**REF.**	**QTY**	**DESCR.**	**FROM**	**UPTO**
1	13413015.1	1	Exhaust Flange		

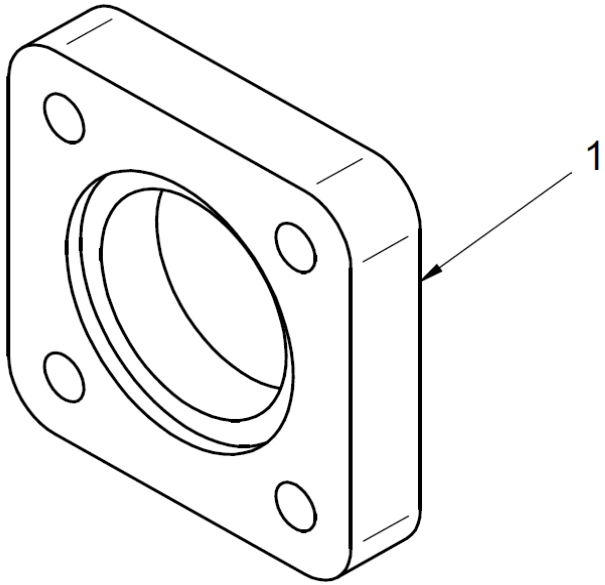

Exhaust System

17213115			Kit Dry Exhaust With Flexible Pipe (S)		
FIG.	**REF.**	**QTY**	**DESCR.**	**FROM**	**UPTO**
1	17213115C	1	Kit Dry Exhaust With Flexible Pipe		

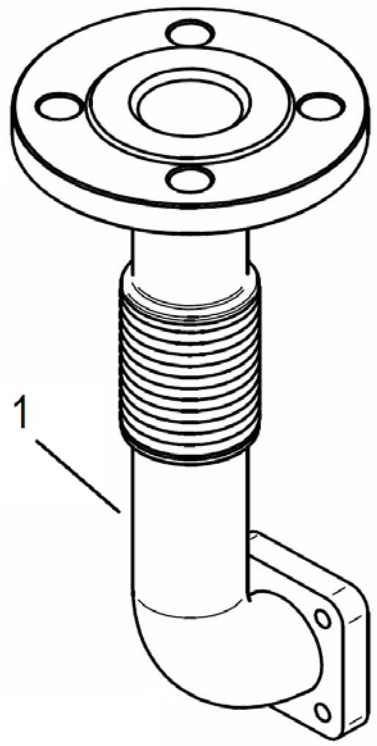

Exhaust System

17213118			Kit Dry Exh. Flexible Pipe & Silencer(S)		
FIG.	REF.	QTY	DESCR.	FROM	UPTO
1	17213115	1	Kit Dry Exhaust With Flexible Pipe (S)		
2	17113022	1	Gasket 88-50X2		
3	17213018	1	Exhaust Muffler		
4	52101463	4	Bolt DIN 931 M16-50 8.8		
5	51030016	4	Washer DIN 125-16		
6	53033016C	4	Washer	10/12/2009	
7	52120016	4	Nut DIN 934 M16 8.8		
8	17213019	1	RAINCover		

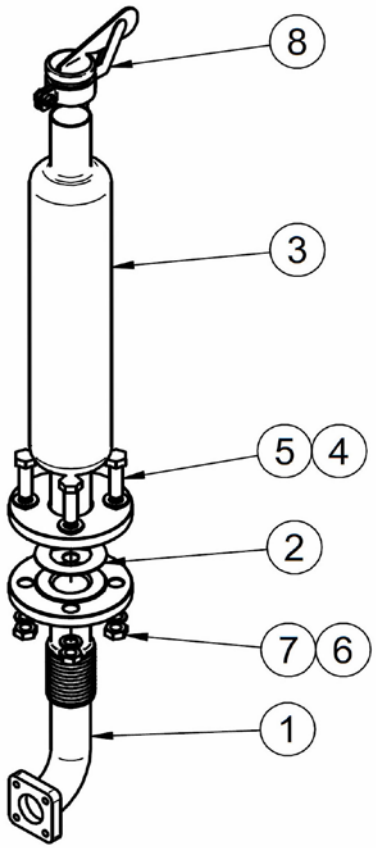

Power Take-off Pulley

	13110101		Pulley 2B (S)		
FIG.	**REF.**	**QTY**	**DESCR.**	**FROM**	**UPTO**
1	13110101.1	1	Pulley 2B		
2	53033010	3	Washer GROWER DIN 127-10		
3	52201315	3	Bolt DIN 931 M10-1,25-60 8.8		

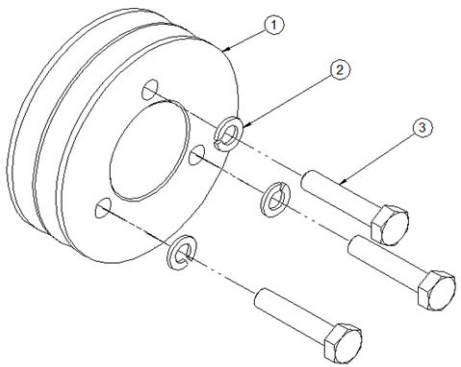

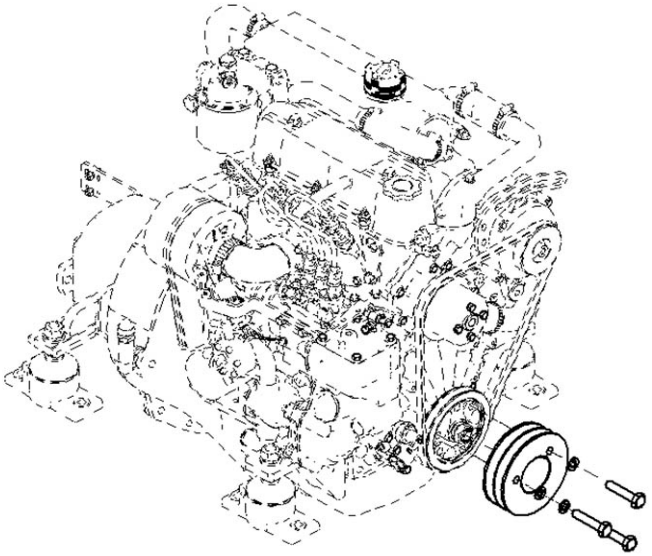

Power Take-off Pulley

	13110202		Pulley 2A (S)		
FIG.	**REF.**	**QTY**	**DESCR.**	**FROM**	**UPTO**
1	13110202.1	1	Pulley 2A	15/06/2016	
2	53033010	3	Washer GROWER DIN 127-10	15/06/2016	
3	52201313	3	Bolt DIN 931 M10-1,25-50 8.8	15/06/2016	

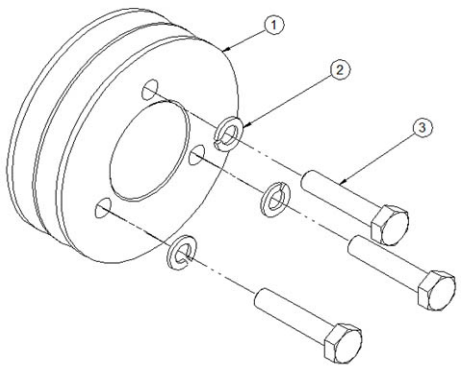

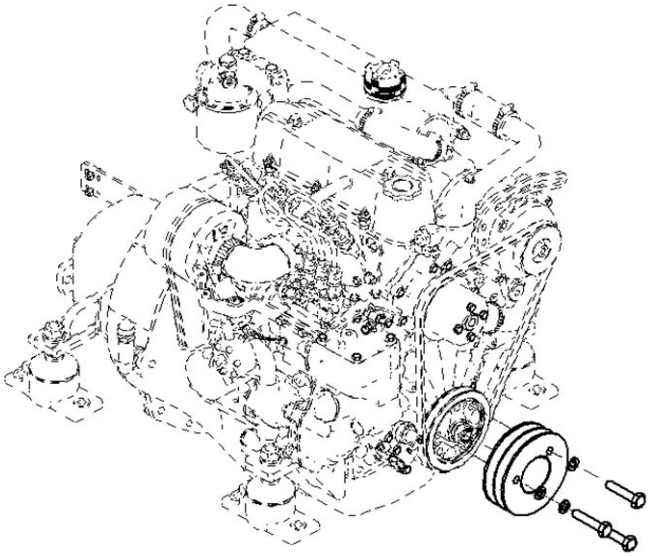

Power Take-off Pulley

17210126			Kit Power Take-off Shaft D40 & Pulley 3A		
FIG.	REF.	QTY	DESCR.	FROM	UPTO
1	17210203	1	Pulley 3A		
2	17210049	1	PTO Shaft, D40		
3	53033010	4	Washer GROWER DIN 127-10		
4	52203315	3	Bolt DIN 912 M10-1,25-60 12.9		
5	52102309	1	Bolt DIN 933 M10-30 8.8		
6	60500064	1	Butt Washer		
7	40040086	1	Flange Ø 40 Shaft Key		

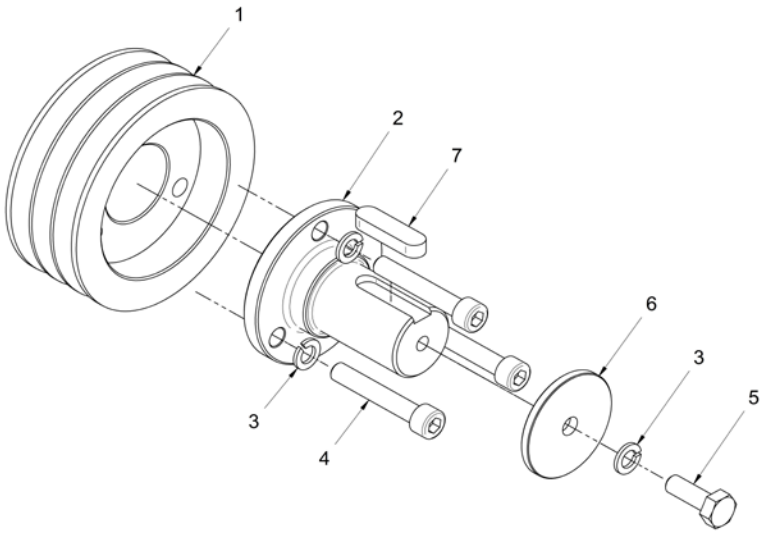

Power Take-off Pulley

17210128			Kit Power Take-Off Shaft D40		
FIG.	**REF.**	**QTY**	**DESCR.**	**FROM**	**UPTO**
1	17210049	1	PTO Shaft, D40		
2	53033010	4	Washer GROWER DIN 127-10		
3	52203308	3	Bolt DIN 912 M10-1,25-25 12.9		
4	52102309	1	Bolt DIN 933 M10-30 8.8		
5	60500064	1	Butt Washer		
6	40040086	1	Flange Ø 40 Shaft Key		

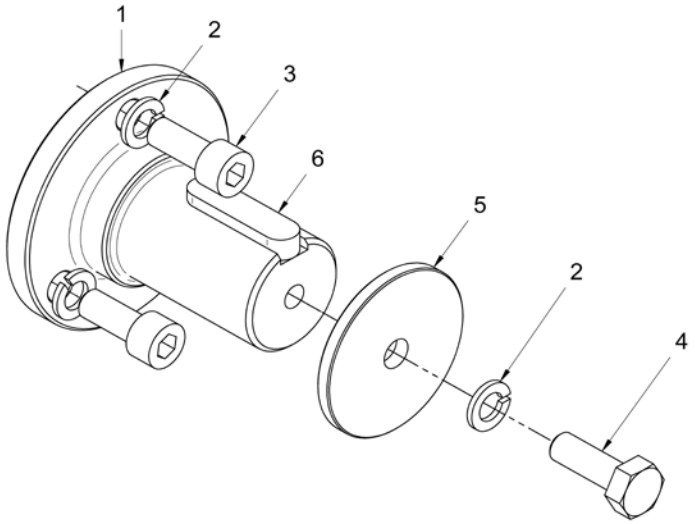

Power Take-off Pulley

	17210129		Kit Pulley 3A (S)		
FIG.	**REF.**	**QTY**	**DESCR.**	**FROM**	**UPTO**
1	17210203	1	Pulley 3A		
2	53033010	3	Washer GROWER DIN 127-10		
3	52203313	3	Bolt DIN 912 M10-1,25-50 12.9		

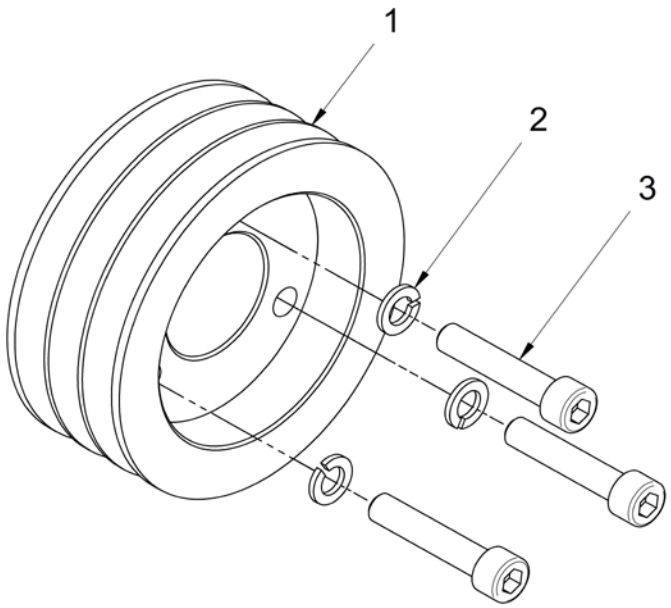

Kit Keel Cooling

17211200.1			Kit Keel Cooling & Dry Exhaust (S)		
FIG.	REF.	QTY	DESCR.	FROM	UPTO
1	13120046	1	Cover Oil Pump SH		
2	13120047	1	Gasket Water Pump		
3	13911002	2	Cover		
4	13811007	2	O-Ring D. 57X2,5		
5	15113042	1	Cover Exhaust Flange		
6	15113043	1	Exhaust Elbow Gasket		
7	52101263	1	Bolt DIN 931 M8-50 8.8		
8	51030008	1	Washer DIN 125-8		

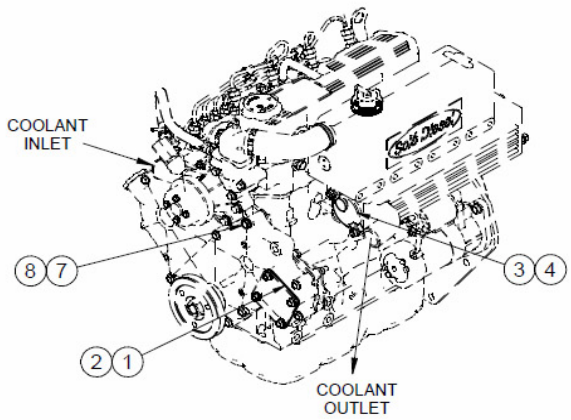

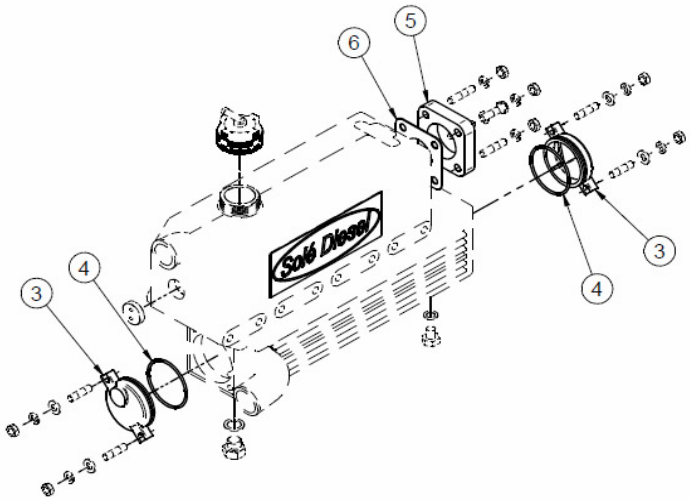

Kit Keel Cooling

	17211210		Kit Refroid. Quille et Esc. Sec TM-345		
FIG.	REF.	QTY	DESCR.	FROM	UPTO
1	17222027.1	1	Flywheel		
2	53038008	6	Washer DIN 6798-A 8		
3	52102257	11	Bolt DIN 933 M8-20 8.8		
4	17210071	1	Flexible Coupling Type B SAE 6"1/2		
5	13410018	1	SAE 7,adaptor flange		
6	53033012	6	Washer GROWER DIN 127-12		
7	52102358	2	Bolt DIN 933 M12-25 8.8		
8	52202360	1	Bolt DIN 933 M12-1,25-35 8.8		
9	18012041	1	Bracket,TM93/170 oil cooler		
12	12120018	2	Stud		
13	53033008	9	Washer GROWER DIN 127-8		
14	52120008	7	Nut DIN 934 M8 8.8		
15	24810913	1	Clamp,CABLE		
16	51030005	2	Washer DIN 125-5		
17	18619020	1	Bracket,Gear box control	02/10/2004	
18	19011011	1	Pipe,water inlet		
19	13611038	1	Pipe 30-40-75		
20	54082025	6	Clamp DIN 3017 25-40/12 W4		
20	54082032	4	Clamp DIN 3017 32-50/12 W4		
21	15212022	1	Elbow	15/02/2017	
21	15312009	2	Elbow		14/02/2017
22	14712051	1	Cooler,oil		
23	14712015	2	Bolt,Coupling pipe oil		
24	57000375	4	Washer 17-22-1,5		
25	52102154	2	Bolt DIN 933 M6-10 8.8		
26	53033006	2	Washer GROWER DIN 127-6		
27	51030006	7	Washer DIN 125-6		
28	52102156	1	Bolt DIN 933 M6-16 8.8		
29	52120006	1	Nut DIN 934 M6 8.8		
30	17211016	1	Bracket,Pipe		
30	18011016	1	Bracket,pipe		
31	17610008	1	HANGER,Engine		
32	18011020	1	Pipe		
32	52202361	1	Bolt DIN 933 M12-1,25-40 8.8		
33	17010003	1	Bracket		

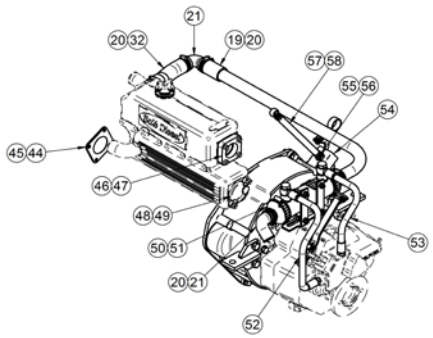

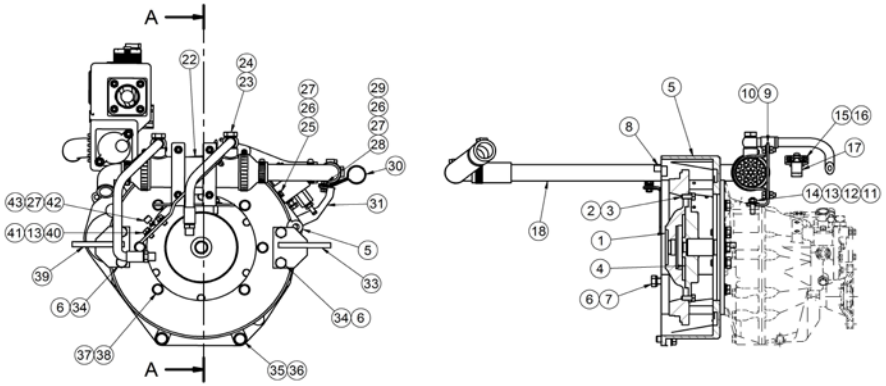

[NS] Not shown

Kit Keel Cooling

17211210			Kit Refroid. Quille et Esc. Sec TM-345		
FIG.	REF.	QTY	DESCR.	FROM	UPTO
34	52102359	4	Bolt DIN 933 M12-30 8.8		
35	52202359	3	Bolt DIN 933 M12-1,25-30 8.8		
36	53038012	3	Washer DIN 6798-A 12		
37	53038010	5	Washer DIN 6798-A 10		
39	17010004	1	Bracket		
41	51030008	4	Washer DIN 125-8		
42	ALLPA.93	1	Coupling,cable	23/05/2017	
42	14719115	1	Coupling,cable		23/05/2017
43	51051107	1	Pin DIN-94 1,6-16		
44	13120046	1	Cover Oil Pump SH		
45	13120047	1	Gasket Water Pump		
46	15113043	1	Exhaust Elbow Gasket		
47	15113042	1	Cover Exhaust Flange		
48	13811007	2	O-Ring D. 57X2,5		
49	13911002	2	Cover		
50	54082050	2	Clamp DIN 3017 50-70/12 W4		
51	15312007	2	Water Cooler Cover		
52	17012024	1	Pipe		
53	18512024	1	Pipe		
54	13814070	1	Electric Fuel Feed Pump 12V		
55	57000361	2	Washer 10-14-1,5	01/06/2013	
56	13814072	2	NIPPLE EYE		
58	13814012	1	Pipe	25/09/2007	
NS	58088282	2	Pastic Cable Zip Tie [NS]	17/01/2014	
NS	59072604	2	Clamp [NS]	29/03/2014	
NS	60900126	1	TERMINAL [NS]		

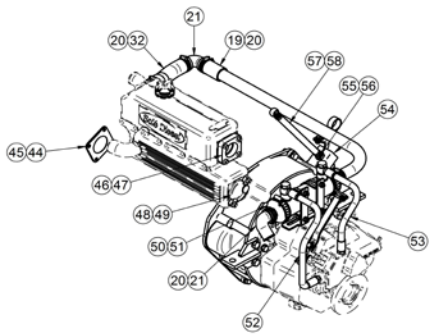

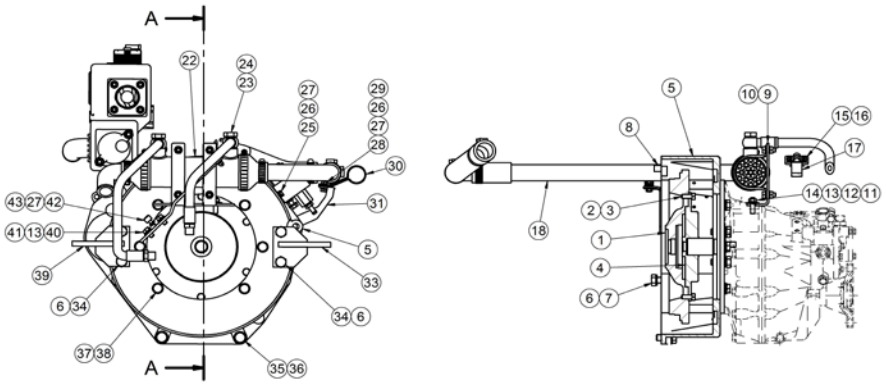

Kit Keel Cooling

	17311210		Kit Refroid. Quille et Esc. Sec		
FIG.	REF.	QTY	DESCR.	FROM	UPTO
1	17322027.1MEC	1	----------		
2	53038008	6	Washer DIN 6798-A 8		
3	52102257	11	Bolt DIN 933 M8-20 8.8		
4	17210071	1	Flexible Coupling Type B SAE 6"1/2		
5	13410018	1	SAE 7,adaptor flange		
6	53033012	6	Washer GROWER DIN 127-12		
7	52102358	2	Bolt DIN 933 M12-25 8.8		
8	52202360	1	Bolt DIN 933 M12-1,25-35 8.8		
9	18012041	1	Bracket,TM93/170 oil cooler		
10	59072604	2	Clamp	29/03/2014	
12	12120018	2	Stud		
13	53033008	12	Washer GROWER DIN 127-8		
14	52120008	7	Nut DIN 934 M8 8.8		
15	24810913	1	Clamp,CABLE		
16	51030005	2	Washer DIN 125-5		
17	18619020	1	Bracket,Gear box control	02/10/2004	
18	19011011	1	Pipe,water inlet		
19	18211018	1	Rubber		
20	54082032	4	Clamp DIN 3017 32-50/12 W4		
21	15212022	2	Elbow	15/02/2017	
22	14712051	1	Cooler,oil		
23	14712015	2	Bolt,Coupling pipe oil		
24	57000375	4	Washer 17-22-1,5		
25	52102154	2	Bolt DIN 933 M6-10 8.8		
26	53033006	2	Washer GROWER DIN 127-6		
27	51030006	4	Washer DIN 125-6		
28	52102156	1	Bolt DIN 933 M6-16 8.8		
29	52120006	1	Nut DIN 934 M6 8.8		
30	17211016	1	Bracket,Pipe		
31	17210008	1	HANGER, Engine		
32	52202361	1	Bolt DIN 933 M12-1,25-40 8.8		
33	17010003	1	Bracket		
34	52102359	4	Bolt DIN 933 M12-30 8.8		
35	52202359	3	Bolt DIN 933 M12-1,25-30 8.8		
36	53038012	3	Washer DIN 6798-A 12		

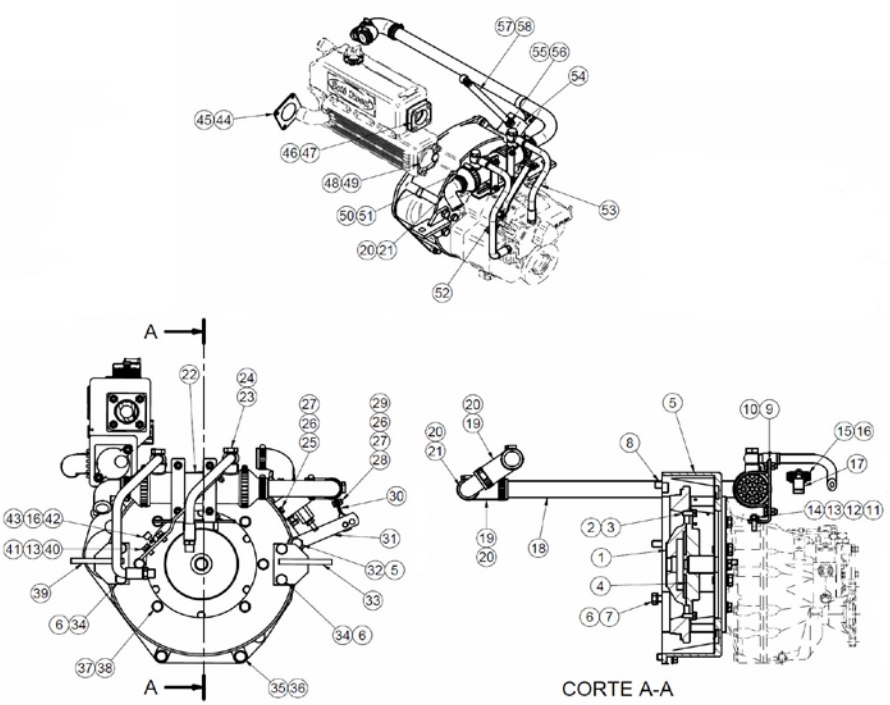

[NS] Not shown

Kit Keel Cooling

	17311210		Kit Refroid. Quille et Esc. Sec		
FIG.	REF.	QTY	DESCR.	FROM	UPTO
37	53038010	5	Washer DIN 6798-A 10		
38	52102307	5	Bolt DIN 933 M10-20 8.8		
39	17010004	1	Bracket		
41	51030008	8	Washer DIN 125-8		
42	14719115	1	Coupling,cable		
43	51051107	1	Pin DIN-94 1,6-16		
44	13120046	1	Cover Oil Pump SH		
45	13120047	1	Gasket Water Pump		
46	15113043	1	Exhaust Elbow Gasket		
47	15113042	1	Cover Exhaust Flange		
48	13811007	2	O-Ring D. 57X2,5		
49	13911002	2	Cover		
50	54082050	2	Clamp DIN 3017 50-70/12 W4		
51	15312007	2	Water Cooler Cover		
53	18512024	1	Pipe		
54	13814070	1	Electric Fuel Feed Pump 12V		
55	57000361	2	Washer 10-14-1,5	01/06/2013	
56	13814072	2	NIPPLE EYE		
57	54081008	1	Clamp DIN 3017 8-16 W4		
58	13814012	1	Pipe	25/09/2007	
NS	52101262	4	Bolt DIN 931 M8-45 8.8 [NS]		
NS	54120008	8	Nut DIN 934 M8 [NS]		
NS	58088282	2	Pastic Cable Zip Tie [NS]	17/01/2014	
NS	60900126	1	TERMINAL [NS]		

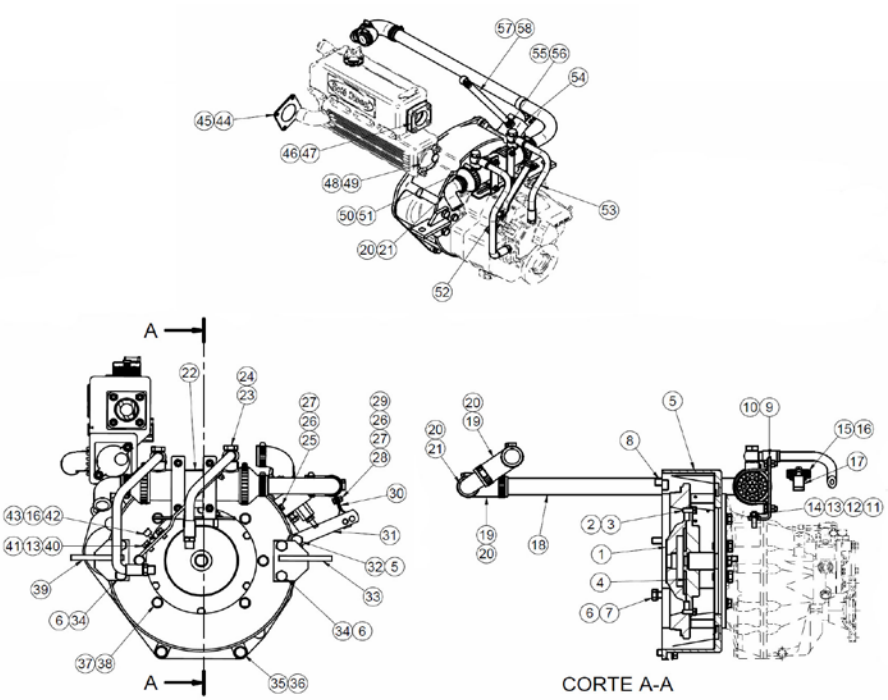

Kit Keel Cooling

17311210.4			Kit GearBox TM-345 With Keel Cooling		
FIG.	REF.	QTY	DESCR.	FROM	UPTO
1	17322027.4.1	1	Flywheel		
2	53038008	6	Washer DIN 6798-A 8		
3	52102257	11	Bolt DIN 933 M8-20 8.8		
4	17210071	1	Flexible Coupling Type B SAE 6"1/2		
5	13410018	1	SAE 7,adaptor flange		
6	53033012	6	Washer GROWER DIN 127-12		
7	52102358	2	Bolt DIN 933 M12-25 8.8		
9	18012041	1	Bracket,TM93/170 oil cooler		
12	12120018	2	Stud		
13	53033008	9	Washer GROWER DIN 127-8		
14	52120008	7	Nut DIN 934 M8 8.8		
15	24810913	1	Clamp,CABLE		
16	51030005	2	Washer DIN 125-5		
17	18619020	1	Bracket,Gear box control	02/10/2004	
18	19011011	1	Pipe,water inlet		
19	13611038	1	Pipe 30-40-75		
20	54082025	6	Clamp DIN 3017 25-40/12 W4		
20	54082032	4	Clamp DIN 3017 32-50/12 W4		
21	15212022	1	Elbow	15/02/2017	
21	15312009	2	Elbow		14/02/2017
22	14712051	1	Cooler,oil		
23	14712015	2	Bolt,Coupling pipe oil		
24	57000375	4	Washer 17-22-1,5		
25	52102154	2	Bolt DIN 933 M6-10 8.8		
26	53033006	2	Washer GROWER DIN 127-6		
27	51030006	7	Washer DIN 125-6		
28	52102156	1	Bolt DIN 933 M6-16 8.8		
29	52120006	1	Nut DIN 934 M6 8.8		
30	18011016	1	Bracket,pipe		
31	17610008	1	HANGER,Engine		
32	18011020	1	Pipe		
32	52202361	1	Bolt DIN 933 M12-1,25-40 8.8		
33	17010003	1	Bracket		
34	52102359	4	Bolt DIN 933 M12-30 8.8		
35	52202359	3	Bolt DIN 933 M12-1,25-30 8.8		

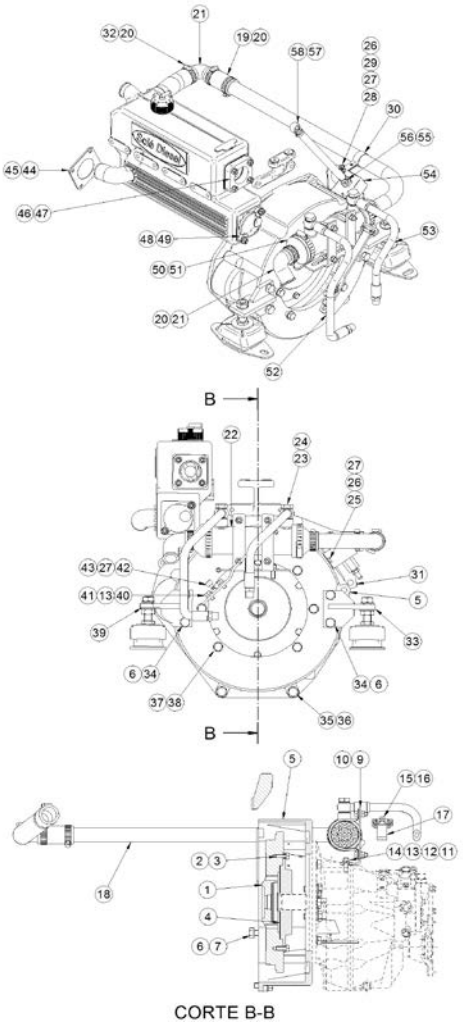

[NS] Not shown

Kit Keel Cooling

17311210.4			Kit GearBox TM-345 With Keel Cooling		
FIG.	REF.	QTY	DESCR.	FROM	UPTO
36	53038012	3	Washer DIN 6798-A 12		
37	53038010	5	Washer DIN 6798-A 10		
39	17010004	1	Bracket		
41	51030008	4	Washer DIN 125-8		
42	ALLPA.93	1	Coupling,cable	23/05/2017	
42	14719115	1	Coupling,cable		23/05/2017
43	51051107	1	Pin DIN-94 1,6-16		
44	13120046	1	Cover Oil Pump SH		
45	13120047	1	Gasket Water Pump		
46	15113043	1	Exhaust Elbow Gasket		
47	15113042	1	Cover Exhaust Flange		
48	13811007	2	O-Ring D. 57X2,5		
49	13911002	2	Cover		
50	54082050	2	Clamp DIN 3017 50-70/12 W4		
51	15312007	2	Water Cooler Cover		
52	17012024	1	Pipe		
53	18512024	1	Pipe		
54	13814070	1	Electric Fuel Feed Pump 12V		
55	57000361	2	Washer 10-14-1,5	01/06/2013	
56	13814072	2	NIPPLE EYE		
58	13814012	1	Pipe	25/09/2007	
NS	58088282	2	Pastic Cable Zip Tie [NS]	17/01/2014	
NS	59072604	2	Clamp [NS]	29/03/2014	
NS	60900126	1	TERMINAL [NS]		

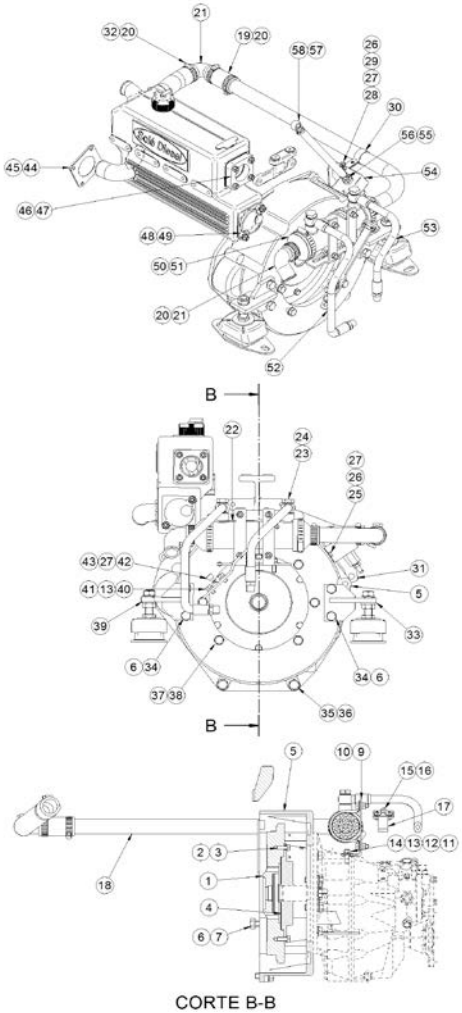

Kit Instrument Panel SVT

17217217			Suplement Panel SVT 30 MINI-33/44/55		
FIG.	REF.	QTY	DESCR.	FROM	UPTO
1	60900985	1	Pressure Sensor		
2	17117052	1	Oil Pressure Sensor Adaptor		
3	60972132	1	SVT 30 MINI-33/44/55 Panel		
NS	TFH.1M.6.3.08	1	Straight Receptacle 1 Sec. Faston [NS]		
NS	60900063	1	Insulator Cap Faston 6.3 [NS]		

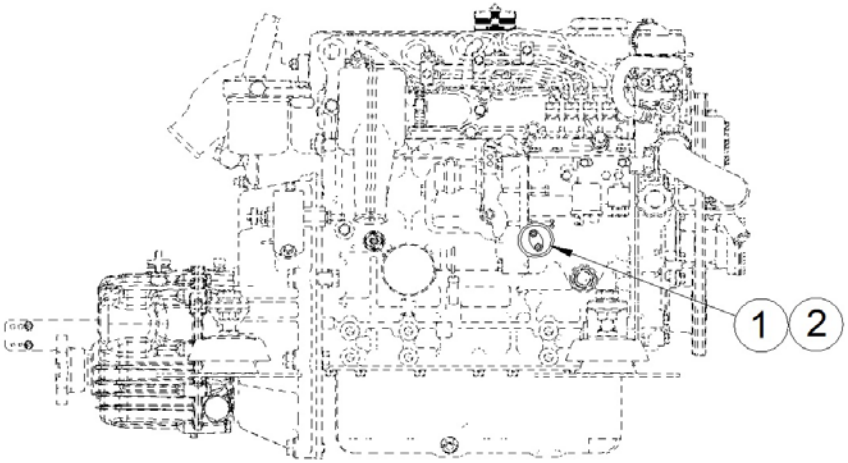

[NS] Not shown

Kit Instrument Panel SVT

60910022			SVT 20 Panel 12V + Exh. Temp. Alarm Kit		
FIG.	**REF.**	**QTY**	**DESCR.**	**FROM**	**UPTO**
1	60900280	1	Exhaust Temperature Alarm Kit		
2	60910001	1	SVT 20 Panel 12V		

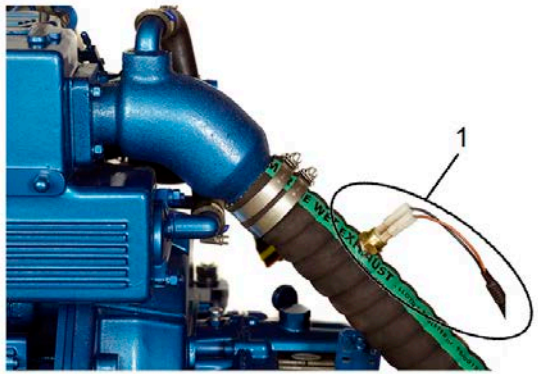

Kit Instrument Panel SVT

60910023			SVT 20 24V Panel + Exh. Temp. Alarm Kit		
FIG.	REF.	QTY	DESCR.	FROM	UPTO
1	60900280	1	Exhaust Temperature Alarm Kit		
2	60910002	1	SVT 20 24V Panel		

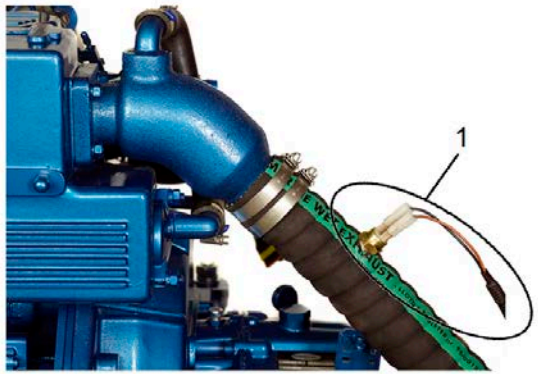

Kit Instrument Panel SVT

60910024			SVT 30 Panel 12V + Exh. Temp. Alarm Kit		
FIG.	**REF.**	**QTY**	**DESCR.**	**FROM**	**UPTO**
1	60900280	1	Exhaust Temperature Alarm Kit		
2	60910004	1	SVT 30 Panel 12V		

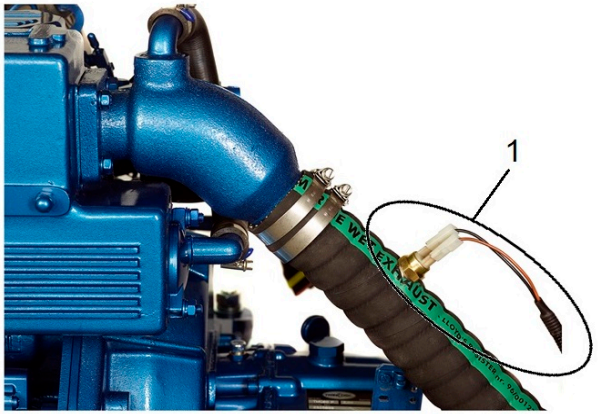

Kit Instrument Panel SVT

60910025			SVT 30 24V Panel + Exh. Temp. Alarm Kit		
FIG.	**REF.**	**QTY**	**DESCR.**	**FROM**	**UPTO**
1	60900280	1	Exhaust Temperature Alarm Kit		
2	60910005	1	SVT 30 24V Panel		

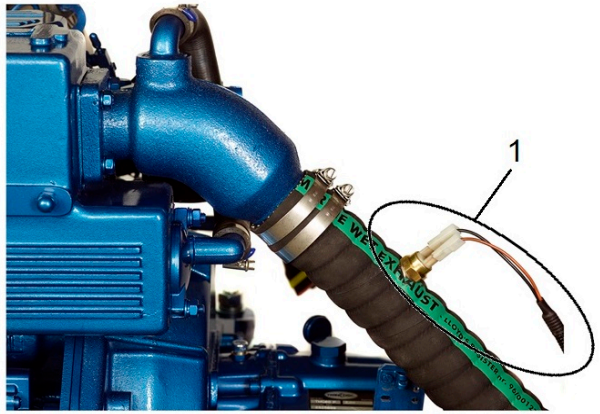

Kit Instrument Panel SVT

60972136			Kit 2nd Panel SVT 30/40 MINI-33/44/55		
FIG.	REF.	QTY	DESCR.	FROM	UPTO
1	60900985	1	Pressure Sensor		
2	17117052	1	Oil Pressure Sensor Adaptor		
3	60972135	1	SVT 40 MINI-33/44/55 Panel		
4	60972132	1	SVT 30 MINI-33/44/55 Panel		
5	60900210.2	1	T Double Panel DERIVATION		
NS	TFH.1M.6.3.08	1	Straight Receptacle 1 Sec. Faston [NS]		
NS	60900063	1	Insulator Cap Faston 6.3 [NS]		

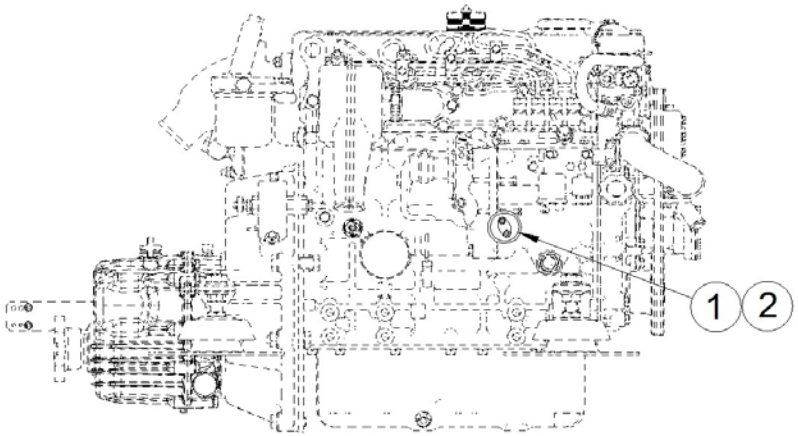

[NS] Not shown

Kit Instrument Panel SVT

60972137			Kit 2nd Panel SVT 40 MINI-33/44/55 12V		
FIG.	REF.	QTY	DESCR.	FROM	UPTO
1	60972130	1	SVT 20 MINI-33/44/55 Panel		
2	60972135	1	SVT 40 MINI-33/44/55 Panel		
3	60900210.2	1	T Double Panel DERIVATION		

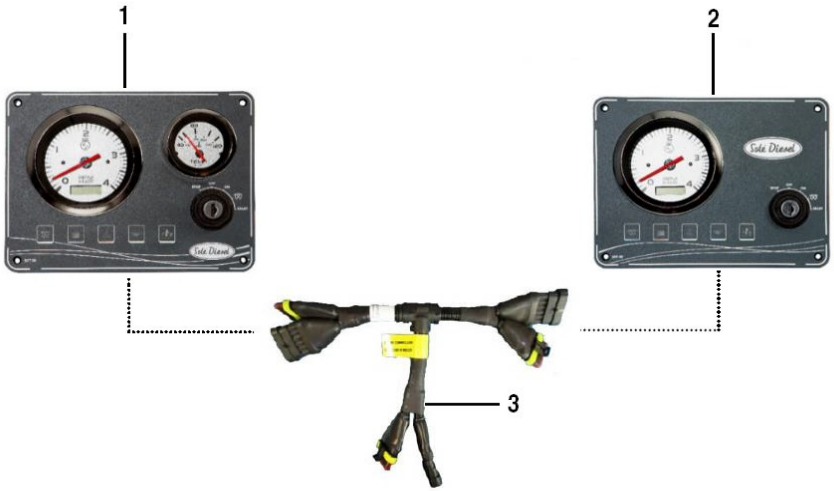

Kit Instrument Panel SVT

60972138			Kit 2nd Panel SVT 40 MINI-33/44/55 24V		
FIG.	REF.	QTY	DESCR.	FROM	UPTO
1	60973130	1	SVT 20 MINI-33/44/55 24V Panel		
2	60973131	1	SVT 40 MINI-33/44/55 24V Panel		
3	60900210.2	1	T Double Panel DERIVATION		

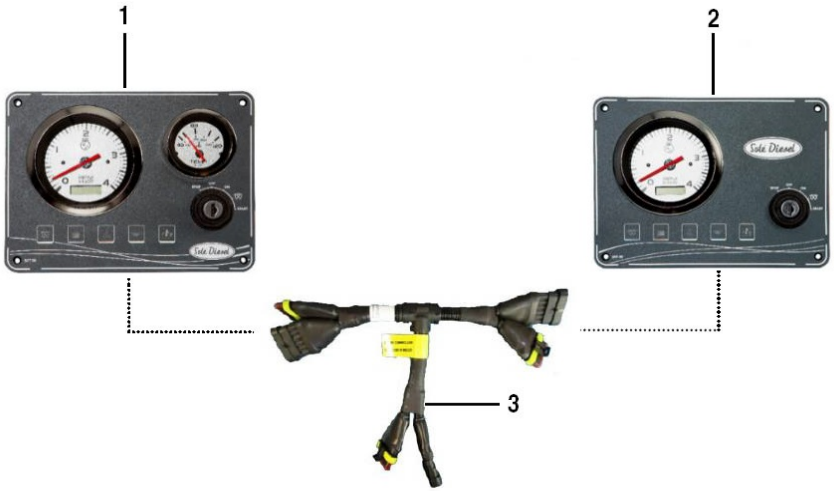

Kits NMEA 2000 - one engine

61472100			Kit SDC 2000 MINI-33/44/55 12V		
FIG.	**REF.**	**QTY**	**DESCR.**	**FROM**	**UPTO**
1	61400200	1	Kit SDC 2000 24V Standard		
2	60900091	2	MICRO Relay 12V 12-20		

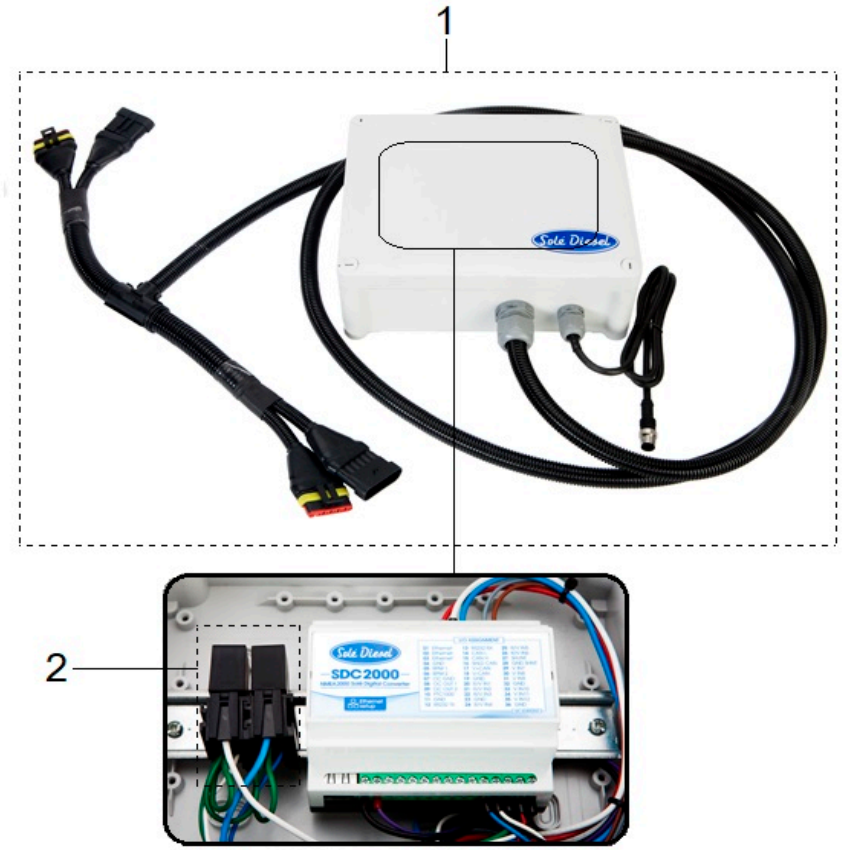

Kits NMEA 2000 - one engine
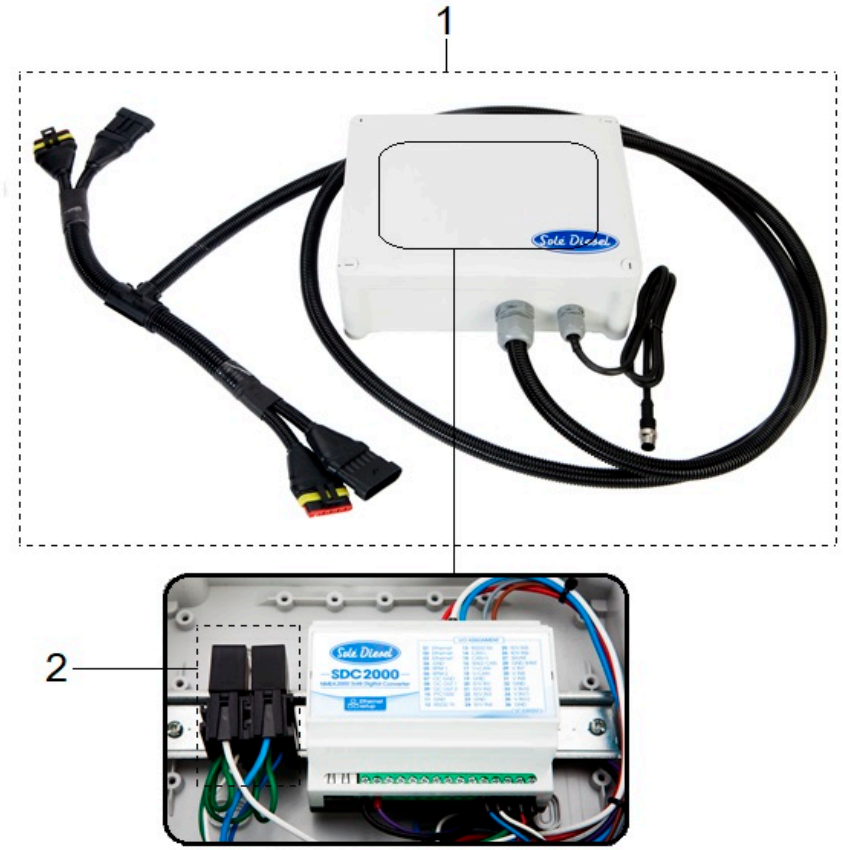
61472200			Kit SDC 2000 MINI-33/44/55 24V		
FIG.	**REF.**	**QTY**	**DESCR.**	**FROM**	**UPTO**
1	61400200	1	Kit SDC 2000 24V Standard		
2	60900092	2	MICRO Relay 24V 24-10