Solé Diesel

Engine Mini-74

VERSION 2018-2

SPARE PARTS MANUAL

PARTS LIST CATALOGUE

NORMS TO PLACE AN ORDER:

For fast and more efficient service, please specify the following information on spare parts orders that must be preferably done by FAX or e-mail as specified below:

1- Engine model: As shown in identification plate

2- Engine serial number: As shown in identification plate and stamped on crankcase

3- Item description + part number + quantity required

Spare parts requests must be adressed to:

recambios@solediesel.com

Telf.: +34 93 775 44 05

Fax: +34 93 775 30 13

The components shown in the catalog have:

- Figure: Number by which they are represented in scheme
- Description: Trade name of the component
- Quantity: Total number of parts used in the assembly of the part represented (may differ from the total minimum quantities)

Hoses, indicates the total length in meters

The diagrams shown in this catalog of spare parts, have only the purpose to identify the piece in question, its representation is not meaningful and may differ from the actual piece.

In case of doubt, contact Solé Diesel, or your authorized dealer.
The parts i / or references in this catalog are subject to change without notice.

SOLÉ, S.A.

C-243b, Km, 2 - P.O. BOX 15

08760 Martorell (Barcelona) Spain

Download the latest version of this manual HERE

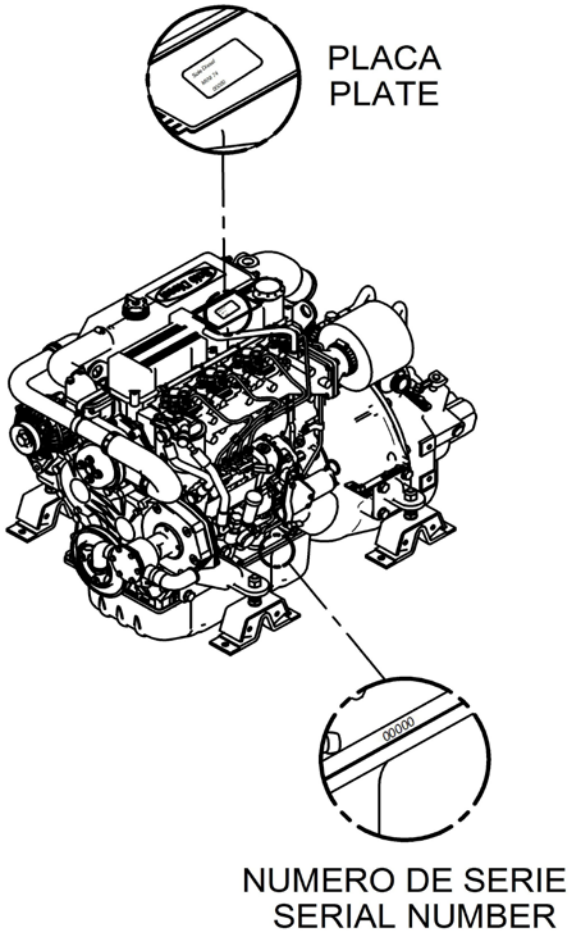

Contents

Engine Body
Cylinder Head
Rocker Cover & Breather
Valve Drive
Timing Parts
Gear Case
Cranckcase
Flywheel Housing
Piston & Connectiong Rod
Crankshaft & Flywheel
Oil Sysem
Oil Pan
Engine Brackets
Bracket, Engine Control

Inlet & Exhaust
Inlet

Cooling System
Water Pump
Cooler Pipes
Water Cooler Assy SM-82/94
Water Cooler Assy MINI-74
Body, Water Cooler And Cap
Wet Exhaust
1" Water Pump, Set

Fuel System
Fuel Pipe
Injection Nozzle
Fuel Injection Pump
Governor Parts
Governor Parts
Fuel Filter
Feed Pump

12V Electrical System
Kit Alternator 14V/110A
Kit Alternator 14V/95A ISKRA
Starter
12V Electrical Wiring
SVT 30 MINI-74/SM-105 Panel

24V Electrical System
Kit Alternator 28V/55A
Starter
24V Electrical Wiring

Maintenance Kit
Gasket Kit
Pipe Rubber Set,Water Line
Gasket Kit
Repair Kit Water Pump 1"

TM-345 Gearbox
Sheet 1/4
Sheet 2/4
Sheet 3/4
Sheet 4/4
Maintenance Kit

TM-345A Gearbox
Sheet 1/4
Sheet 2/4
Sheet 3/4
Sheet 4/4
Maintenance Kit

Gearbox TM-880A
Sheet 1.1/4
Sheet 1.2/4
Sheet 1.3/4
Input Shaft 2/4
Intermediate Shaft 3/4
Output Shaft 4/4
Maintenance Kit

Gearbox TM-170
Sheet 1.1/4
Sheet 1.2/4
Sheet 1.3/4
Input Shaft 2/4
Intermediate Shaft 3/4
Output Shaft 4/4
Maintenance Kit

Gearbox TM-170A
Sheet 1.1/4
Sheet 1.2/4
Sheet 1.3/4
Input Shaft 2/4
Intermediate Shaft 3/4
Output Shaft 4/4
Maintenance Kit

Gearbox TM-93
Sheet 1.1/4
Sheet 1.2/4
Sheet 1.3/4
Intermediate Shaft 2/4
Input Shaft 3/4
Output Shaft 4/4
Maintenance Kit

Gearbox TM-93A
Sheet 1.1/4
Sheet 1.2/4
Sheet 1.3/4
Intermediate Shaft 2/4
Input Shaft 3/4
Output Shaft 4/4
Maintenance Kit

Gearbox TMC-260
Sheet 1/3
Sheet 2/3
Cooling System 3/3
Maintenance Kit

GearBox ZF-63 IV
Sheet 1/2
Sheet 2/2
Mechanical Selector Valve
Electric Selector Valve 12V/24V
Electric Selector Valve 12V/24V (TV)

Kit Gearbox
Kit Z-Drive VOLVO 280/290 Z=26
Kit Z-Drive Volvo 280/290 Z=10
Kit GearBox TM-93
Kit GearBox TM-345/A

Kit GearBox TM-170/A/880A
Kit GearBox BORG WARNER With Oil Cooler
Kit GearBox BW (Without Oil Cooler)
Kit GearBox ZF-63IV
PRM-160 SAE7 Coupling Housing Kit
Kit GearBox TMC-260
Kit SAE 7
Kit DONG-I DMT-25AL Gearbox

Electrical System

Kit 2nd Alternator 28V/55A
Kit 2nd Alternator 14V/95A
Kit 2nd Alternator 28V/140A
Kit Wire Earth Isolated 12V
Kit 24V Engine Electrical System

Other Kits

Pressure Gauge Kit 10 BAR
Kit Trolling Valve for TM-93/A
Kit Trolling Valve for TM-345/A
Boiler Kit (S)
Kit Hose Extension, Sea Water
Kit 2nd Fuel Filter (S)
Kit Injection Pipes 2nd Wall (S)
Kit Trolling Valve for TM-170/A

Exhaust System

Kit Dry Exh. Flexible Pipe & Silencer(S)
Exhaust Flange (S)
Kit Dry Exhaust With Flexible Pipe (S)

Power Take-off Pulley

Pulley 2B (S)
Pulley 2A (S)
Pulley 4A D138 (S)
Pulley 4B (S)
Kit Power Take-off D40 (S)
Kit Pulley & Power Take-off 2A
Kit Pulley & Power Take-off 2B
Pulley 4B (S)
Pulley 4A D195 (S)

Kit Keel Cooling

Kit Keel Cooling & Dry Exh.- TM GearBox

Kit Instrument Panel SVT

SVT 30 Panel 12V + Exh. Temp. Alarm Kit
SVT 30 24V Panel + Exh. Temp. Alarm Kit
Kit 2nd Panel SVT 40 MINI-74/SM-105 12V
Kit 2nd Panel SVT 40 MINI-74/105 24V

Kits NMEA 2000 - one engine

Kit SDC 2000 MINI-74/105 12V
Kit SDC 2000 MINI-74/105 24V

Engine Body

D_MI74_1_1			Cylinder Head		
FIG.	REF.	QTY	DESCR.	FROM	UPTO
1	17421001	1	Head Assy,Cylinder		
2	(*)	2	Not available [NP]		
2A	17220006	8	Cap, SealING		
2B	13121003	7	Cap Sealing [NP]		
2C	17121002	8	Guide,Valve [NP]		
2D	17421061	4	Seat,Valve,IN		
2E	17421062	4	Seat,Valve,Exhaust		
2G	17421015	4	JET,COMBUSTION		
3	17427080	1	SWITCH,THERMO		
4	17121013	1	Gasket		
5	17421005	17	Bolt,cylinder head		
6	17421004	1	Gasket,Cylinder Head		
7	17420014	1	EYE,LIFTING,Front		
8	17421018	1	EYE,LIFTING,Head REA		
9	17421011	1	Gasket		
10	13820043	2	Bolt,W/Washer		
11	17121012	4	Bolt, w/washer		
NS	17121016	1	Plug, drain [NS]		17/10/2017

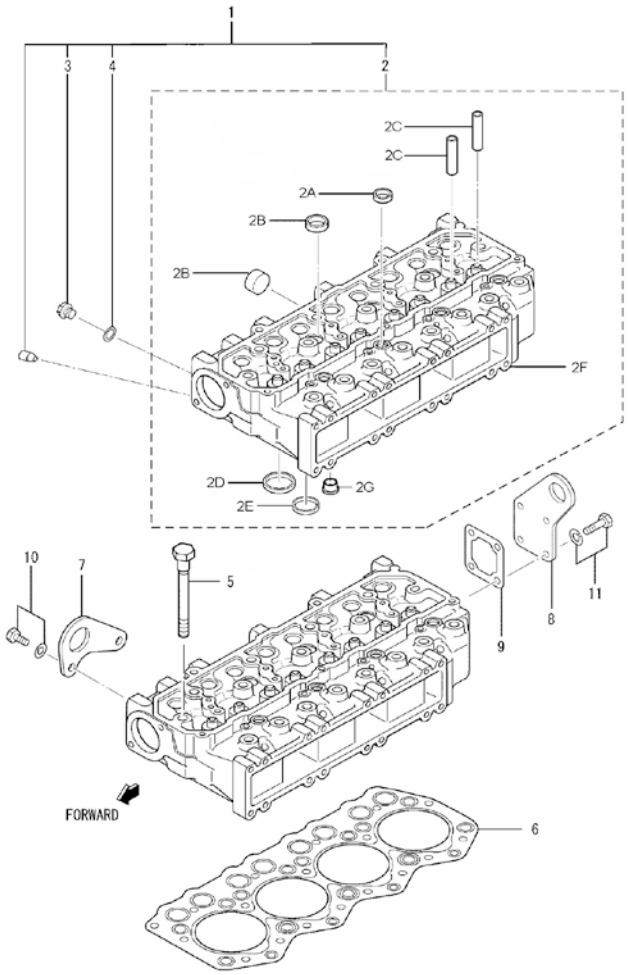

[NP] Not provided
[NS] Not shown

Engine Body

D_MI74_1_2			Rocker Cover & Breather		
FIG.	REF.	QTY	DESCR.	FROM	UPTO
1	17421009	1	Cover Assy,Rocker		
2	13221003	1	Cap Oil FILLER		
3	52101261	5	Bolt DIN 931 M8-40 8.8		
4	17421010	1	Rocker Cover Gasket		
5	17421006G.1	1	Hose,BREATHER [NP]		

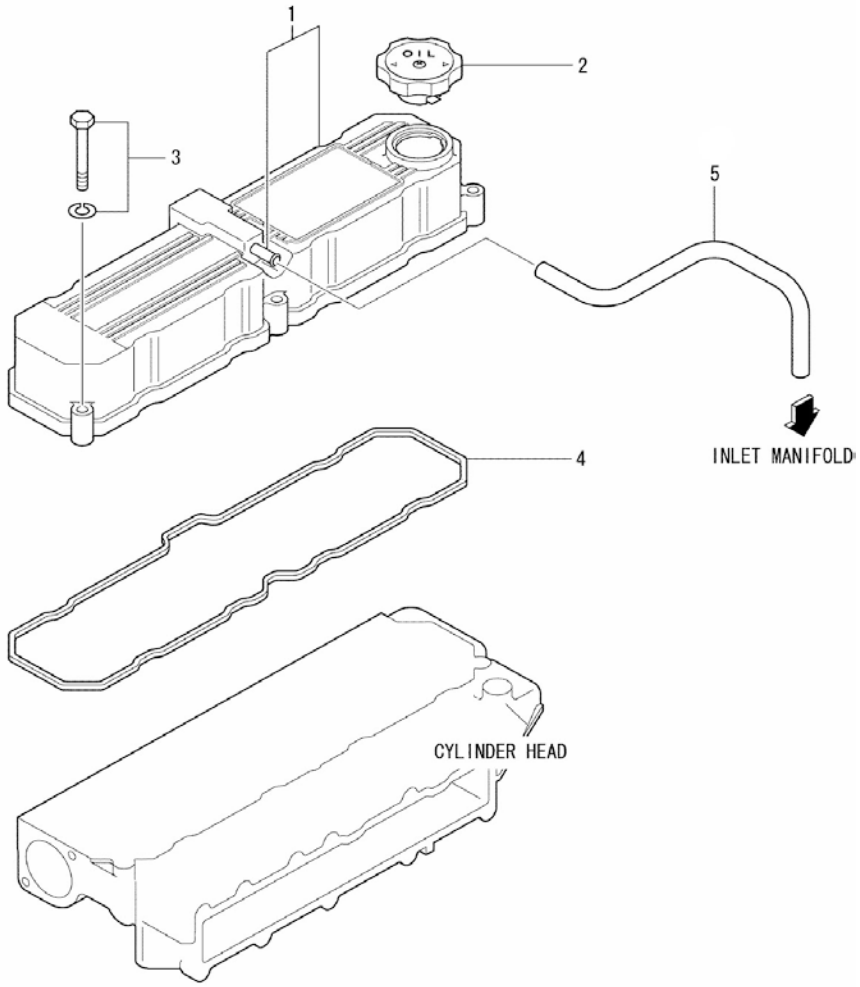

[NP] Not provided

Engine Body

D_MI74_1_3			Valve Drive		
FIG.	REF.	QTY	DESCR.	FROM	UPTO
1	17422055	4	Intake Valve		
2	17422056	4	Exhaust Valve		
3	13322028	8	Spring,valve outler		
4	17422058	8	Retainer,Upper		
5	17122059	16	COTTER,Valve		
6	13322024	8	Cap		
7	17422054	8	Seal,Valve Stem		
8	(*)	1	Not available [NP]		
8A	17122050	2	Ring, snap		
8B	17422046	1	Shaft Assy,Rocker		
8BA	13322023	2	Cap, SealING		
8C	17422048	4	Bracket,Rocker Shaft		
8D	17422053	4	Bolt,Rocker Bracket		
8E	17422142.1	8	Rocker Assy		
8EA	17122060	8	Nut		
8EB	17122044	8	Screw Adjusting		
8F	17422047G.1	3	Spring,Rocker		
8G	17122051	4	Bolt, w/washer		

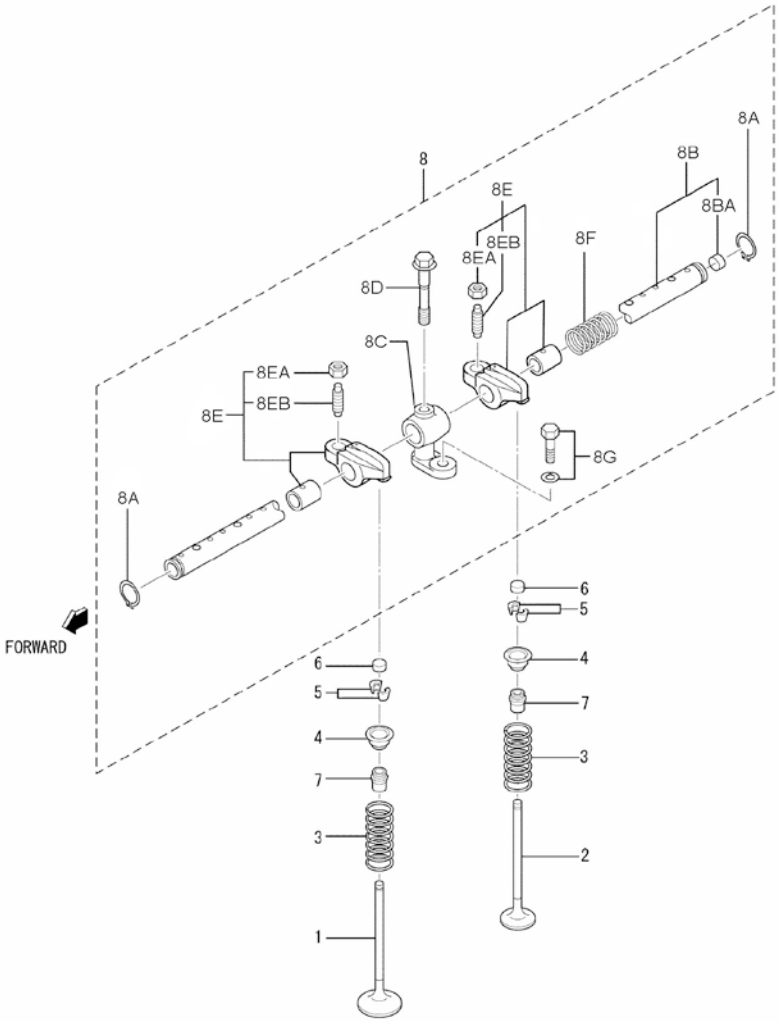

[NP] Not provided

Engine Body

D_MI74_1_4			Timing Parts		
FIG.	REF.	QTY	DESCR.	FROM	UPTO
1	17422035	1	CamShaft		
2	13322034	1	KEY WOODRUFF		
3	17422075	1	Plate,THRUST		
4	13820043	2	Bolt,W/Washer		
5	17122061	8	Tappet		
6	17122041	8	ROD, push		
7	17422037	1	Gear,CamShaft Z=46		
8	17422040	1	Gear,INJ.Pump Z=46		
9	17422038	1	Gear,IDLER Assy Z=49		
10	17122032	1	Plate, thrust		
11	13322079	1	Bolt		
12	17422066	1	Gear,Oil Pump Z=31		
13	53104255	2	Bolt DIN 7984 M8-12 10.9		

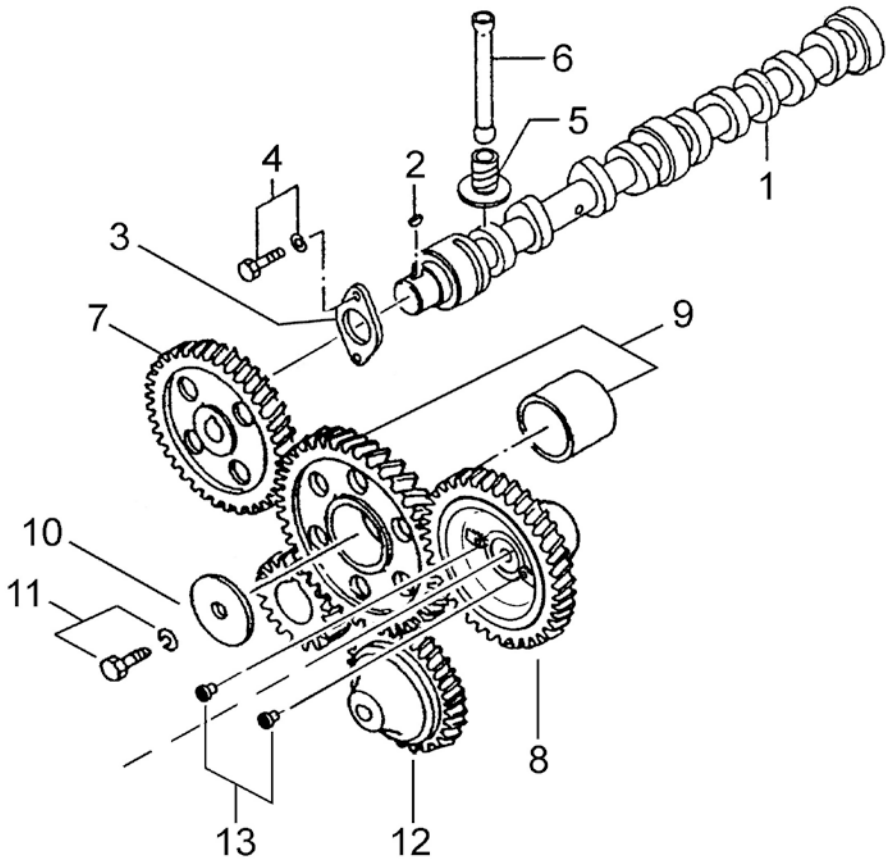

Engine Body

D_MI74_1_5			Gear Case		
FIG.	REF.	QTY	DESCR.	FROM	UPTO
1	17420024	1	Plate, Front		
2	17420035	1	Case Gear		
3	17420018	1	Gasket,Front Plate		
4	13820043	5	Bolt,W/Washer		
5	17420040	1	Gasket,Gear		
6	17120047	13	Bolt, w/washer		
7	17420039.1	1	Seal Assy,Oil		
8	17411026	1	Coupling Drive		
9	17422071	1	Nut,INJ.Pump		
10	15310072	1	CrossHead		
11	17420047	1	O-Ring D. 140X2		
12	17410010	1	Block Water Pump		
13	13310013	1	Gasket,water pump		
14	51030008	5	Washer DIN 125-8		
15	53033008	5	Washer GROWER DIN 127-8		
16	52101268	5	Bolt DIN 931 M8-75 8.8		
17	51030006	4	Washer DIN 125-6		
18	52103156	4	Bolt DIN 912 M6-16 8.8		

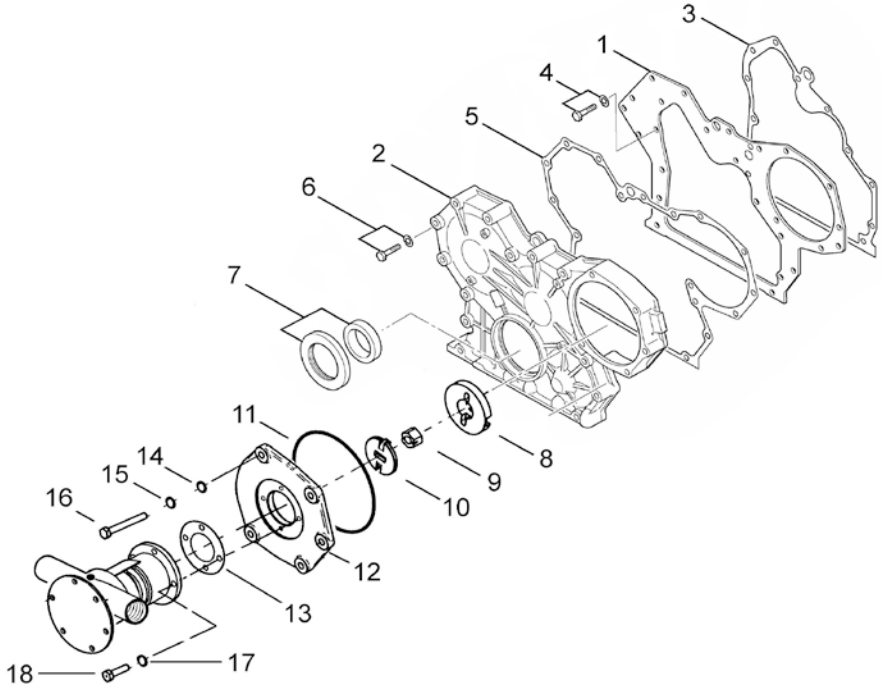

Engine Body

	D_MI74_1_6		Cranckcase		
FIG.	REF.	QTY	DESCR.	FROM	UPTO
1	17420001.1	1	CRANKCase Assy		
2	(*)	10	Not available [NP]		
2A	13320006	10	Cap, Sealing		
2D	17420009	10	Bolt Bearing Cap		
3	13320007	4	Cap, SealING		
4	17420027G.1	1	Plug,TAPPERED (Generator)		
6	17420013	1	Plug,Cam		
7	17420036	2	Pin,Dowel		
8	13320025	2	Pin		
9	17120019	2	Pin, dowel		
10	17420012	6	Pin,Spring		
11	17420112	2	Seal,Valve		
12	17420011	1	Bushing		
13	17420034	1	Shaft,IDLER		
14	17120022	1	Plug, tapered		
15	17820011	7	Plug, Tapered [NP]	12/07/2017	
15	13120011	7	Plug, Tapered [NP]		12/07/2017
16	17120021	1	Plug TAPER [NP]		
17	17420003	1	METAL,MAIN Set STD		
18	17420004	1	METAL,MAIN Set -0,25		
19	17420005	1	METAL,MAIN Set -0,50		
20	17420006	1	METAL,MAIN Set -0,75		
21	17420109	3	Plate,THRUST.C/S STD		
22	17420110	3	Plate,THRUST.C/S +0,15		
23	17420111	3	Plate,THRUST.C/S +0,30		

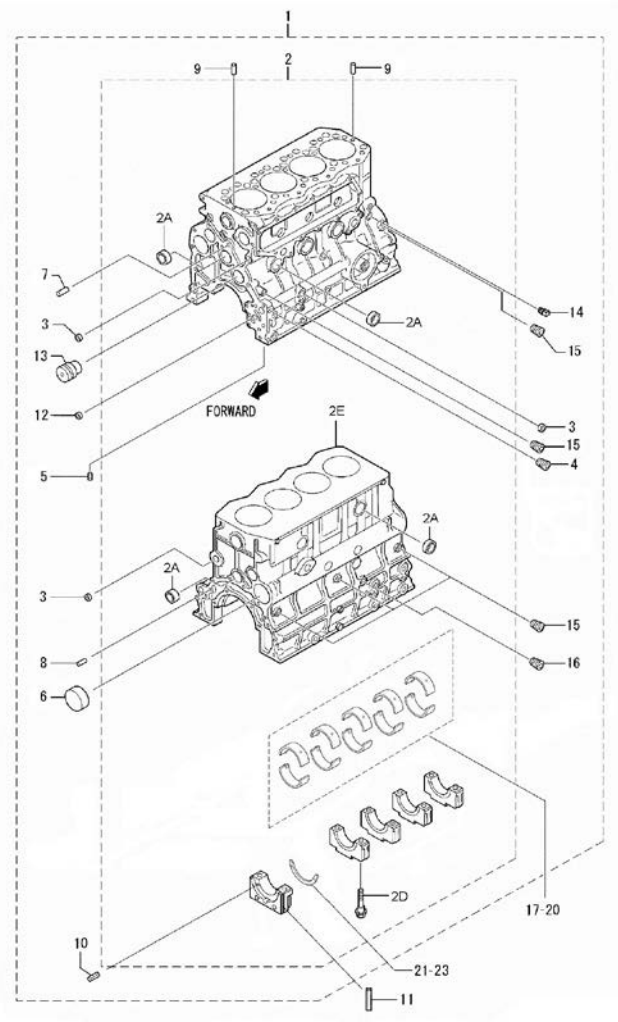

[NP] Not provided

Engine Body

D_MI74_1_7			Flywheel Housing		
FIG.	REF.	QTY	DESCR.	FROM	UPTO
1	17420002	1	FLYWEEL Housing		
2	17420025	1	Gasket,REAR		
3	17120062	10	Bolt,w/washer		
4	13327004	2	Bolt DIN 933 M10-1,25-30 8.8 [NP]		
5	13320063	1	Seal Oil		
6	17420067G	2	Stud (Generator)		
7	13127002	2	Nut		
8	53033010	2	Washer GROWER DIN 127-10		
9	17121016	1	Plug, drain		
10	17121013	1	Gasket		
11	13224045	1	Plug		
12	13120032	1	Washer 18-23-1,5 [NP]		

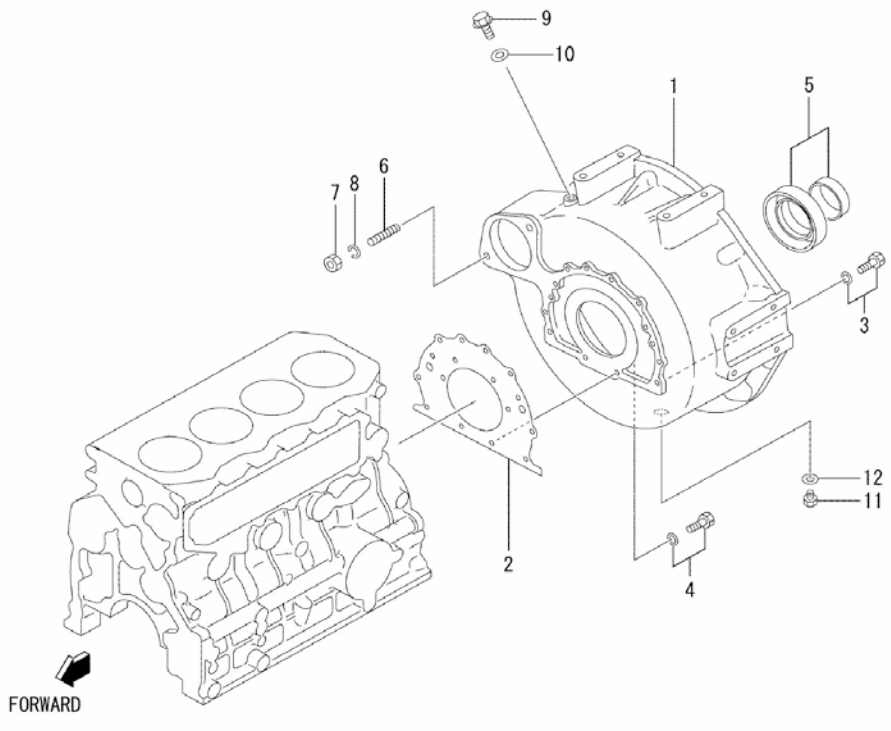

[NP] Not provided

Engine Body

D_MI74_1_8			Piston & Connectiong Rod		
FIG.	REF.	QTY	DESCR.	FROM	UPTO
1	17422001	4	Piston STD.		
2	17422002	4	Piston O.S 0,25		
3	17422003	4	Piston O.S 0,50		
4	17422006	4	Ring Set,Piston STD.		
5	17422007	4	Ring,Piston O.S 0,25		
6	17422008	4	Ring,Piston O.S 0,50		
7	17422009	4	Pin,Piston		
8	17422010	8	Ring,SNAP		
9	17422012	4	ROD,CONNECTING		
9A	17122011	8	Nut [NP]		
9B	17122013	8	Bolt,connecting rod		
9C	17422033	4	Bushing,Con-Rod		
10	17422014	8	Half Bearing, con-rod Std. [NP]		
11	17422015	8	Bearing Set,Con-Rod,U.S 0,25		
12	17122016	8	Half Bearing, con-rod O.S +0.50		
13	17122017	8	Half Bearing, con-rod O.S +0.75		

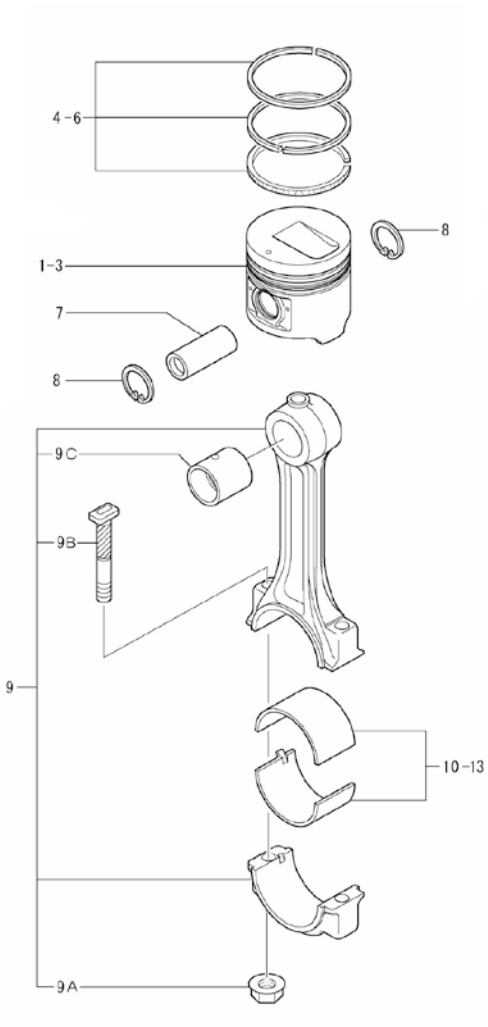

[NP] Not provided

Engine Body

D_MI74_1_9			Crankshaft & Flywheel		
FIG.	REF.	QTY	DESCR.	FROM	UPTO
1	17422018	1	CrankShaft Assy		
2	13322059	2	Pin		
3	13322034	2	KEY WOODRUFF		
4	(*)	1	Not available [NP]		
5	17422026	1	Nut,CrankShaft		
6	17422019	1	Gear,CrankShaft		
7	17422024	1	Pulley CrankShaft		
8	17422027	1	Flywheel Assy		
8A	17422029	1	Gear,Ring Z=122		
9	13322065	4	Bolt		
10	53033012	4	Washer GROWER DIN 127-12		

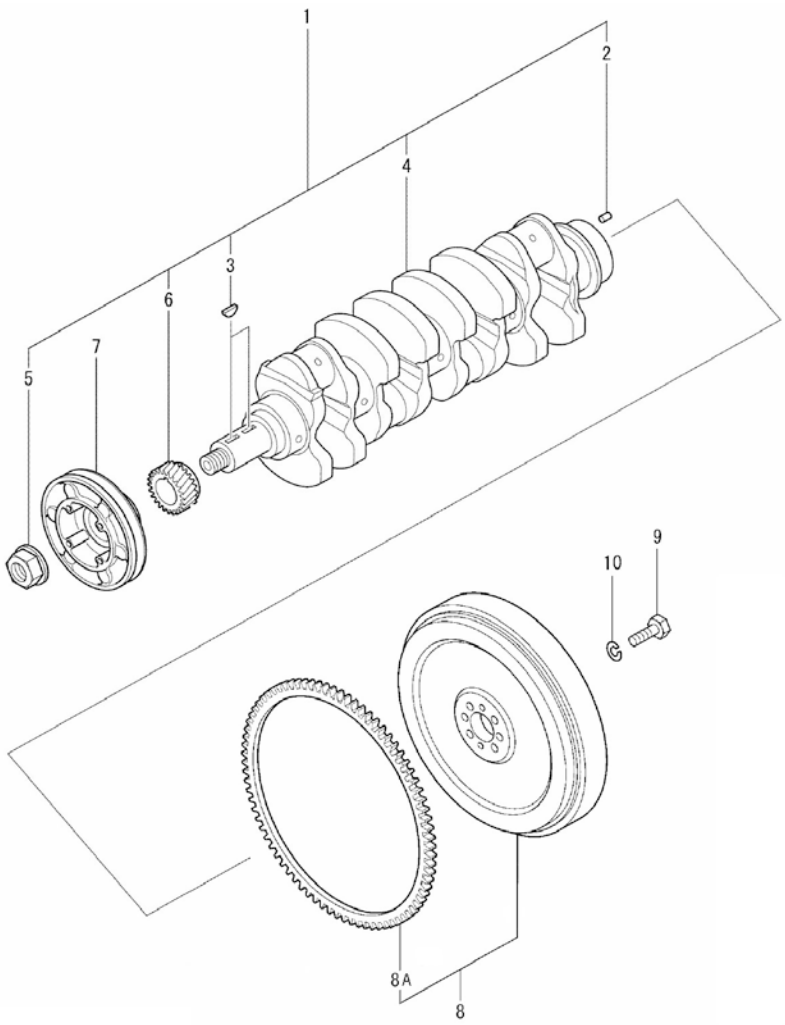

[NP] Not provided

Engine Body

D_MI74_1_10			Oil Sysem		
FIG.	REF.	QTY	DESCR.	FROM	UPTO
1	17424040	1	Pump Assy,Oil		
2	17424055.1	1	O-Ring D. 60X2 [NP]		
3	17121012	4	Bolt, w/washer		
4	13122045	1	Nut		
5	53033010	1	Washer GROWER DIN 127-10		
6	17424052	1	STrainer,Oil		
7	17424060	1	O-Ring D. 22X2,4		
8	13820043	16	Bolt,W/Washer		
9	17124071	1	Valve, Assy		
10	17424063	1	Gasket		
11	17424065G	1	Cover,CRANKCase Side		
12	17424062.1	1	Gasket,Side Cover		
13	17424051	1	Oil Filter Element		
14	17424054	1	Union,Oil Filter		
15	17127027	1	SWITCH, oil pressure		
16	17117052	1	Oil Pressure Sensor Adaptor	29/09/2015	
17	60900985	1	Pressure Sensor		

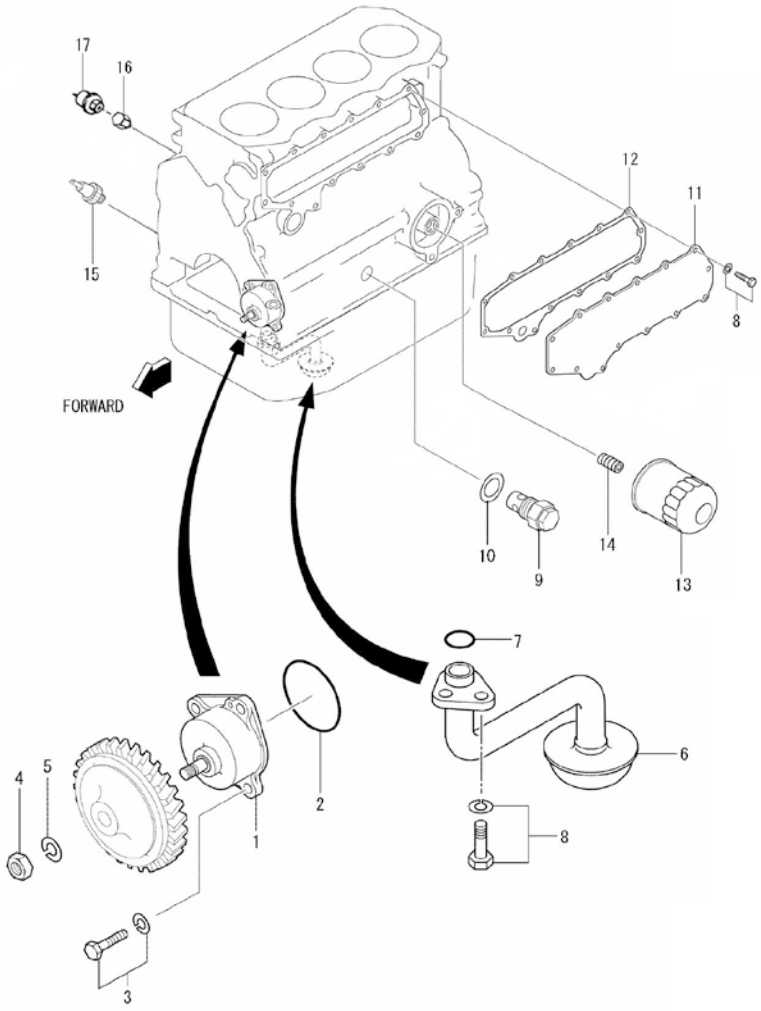

[NP] Not provided

Engine Body

D_MI74_1_11 Oil Pan

FIG.	REF.	QTY	DESCR.	FROM	UPTO
1	17420030	1	Oil PAN Assy		
2	13820043	24	Bolt,W/Washer		
3	12814051	1	Screw,eye		
4	56000219	2	Washer 14-20-3		
5	18014021	1	Extraction Hose		
6	13322078	1	Bolt		
7	18014022	1	Bracket,pipe		
8	56000069	1	Washer 14-20-1,5		
9	16514020	1	Plug		
10	14714001	1	Pump,oil Suction		
11	17420029	1	Gauge Oil LEVEL		

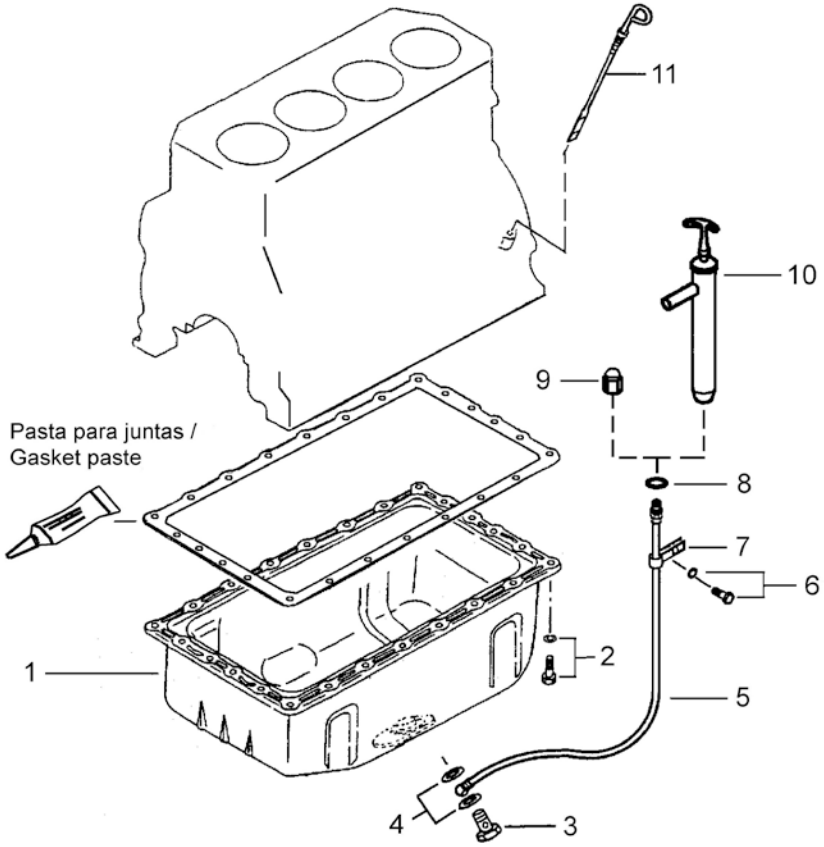

D_MI74_1_12			Engine Brackets		
FIG.	REF.	QTY	DESCR.	FROM	UPTO
1	17410002	2	REAR Bracket		
2	17410001	2	Front Bracket		
3	61682000	4	Anti Vibration Mount Type E 75SHA		
4	53033012	16	Washer GROWER DIN 127-12		
5	52102359	16	Bolt DIN 933 M12-30 8.8		

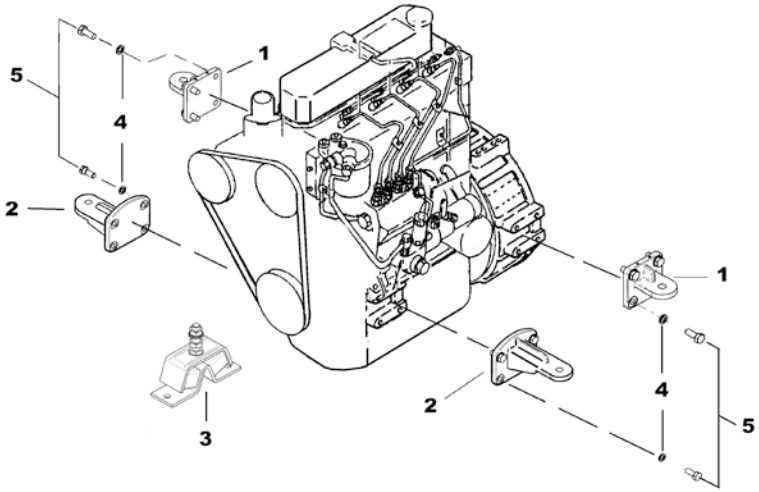

D_MI74_1_13			Bracket, Engine Control		
FIG.	REF.	QTY	DESCR.	FROM	UPTO
1	17419001	1	Bracket,Engine Control		
2	14719013	1	Clamp,cable		
3	55307104	2	Bolt DIN 86 W3/16-10		
4	52102156	2	Bolt DIN 933 M6-16 8.8		
5	53033006	2	Washer GROWER DIN 127-6		

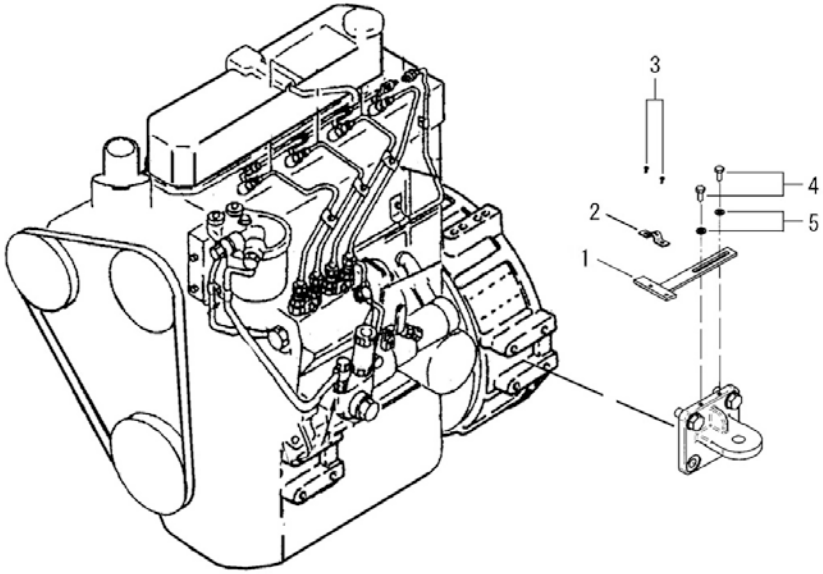

Inlet & Exhaust

D_MI74_2_1			Inlet		
FIG.	REF.	QTY	DESCR.	FROM	UPTO
1	17421030	1	MANIFOld Assy,Inlet		
2	17421032	1	Gasket IN.MANIFOld		
3A	52101261	14	Bolt DIN 931 M8-40 8.8		
3B	53033008	14	Washer GROWER DIN 127-8		
4	17421014G	2	Bolt (Generator)		
5	13321016	2	Washer GROWER DIN 127-8 [NP]		
6	17421042	1	Gasket		
7	17421029	1	Pipe,Air Inlet		
8	17421012	3	Bolt		
9	17410032	1	Ring		
10	17410030	1	Air Filter Complete		
11	17410031	1	Element,Air Filter		

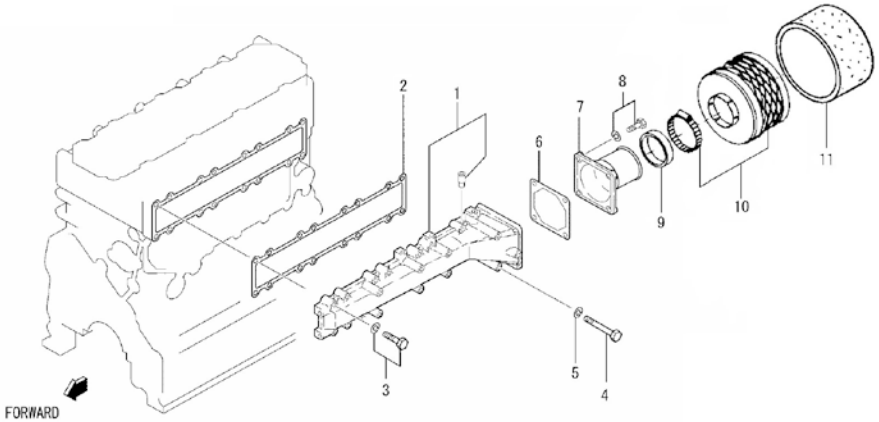

[NP] Not provided

Cooling System

D_MI74_3_1			Water Pump		
FIG.	REF.	QTY	DESCR.	FROM	UPTO
1	17421020	1	Fresh Water Pump (tube Ø10)		
1A	17421060	2	Bolt,Flange		
1B	17421026G	1	Bolt,Flange		
1C	17421043	1	Cover,Water Pump		
1D	17421022	1	Gasket,Pump Cover		
1E	17421046	1	Plug TAPER 3/8 [NP]		
2	17421041	1	Gasket,Side Cover		
3	17121039	5	Bolt DIN 931 M8-45 8.8 [NP]		
4	17121021	1	Pulley,Water Pump		
5	17121056	4	Bolt DIN 933 M8-15 8.8		
6	17421037	1	Case Assy,Thermostat		
7	13321014	1	Gasket [NP]		
8A	52101268	1	Bolt DIN 931 M8-75 8.8		
8B	53033008	1	Washer GROWER DIN 127-8		
9	17121039	1	Bolt DIN 931 M8-45 8.8 [NP]		
10	17421025	1	Hose,BY-PASS		
11	17121036	2	Clamp, hose		
12	60900980	1	Temperature Sensor		
13	17121016	1	Plug, drain		
14	17121013	1	Gasket		
15	17111021	1	Gasket		
16	17121027	1	Thermostat		
17	17111020	1	FITTING,water outlet		
18	52101263	1	Bolt DIN 931 M8-50 8.8		
19	17421060	1	Bolt,Flange		
20	53038008	2	Washer DIN 6798-A 8		
NS	17427080	1	SWITCH,THERMO [NS]	17/10/2017	

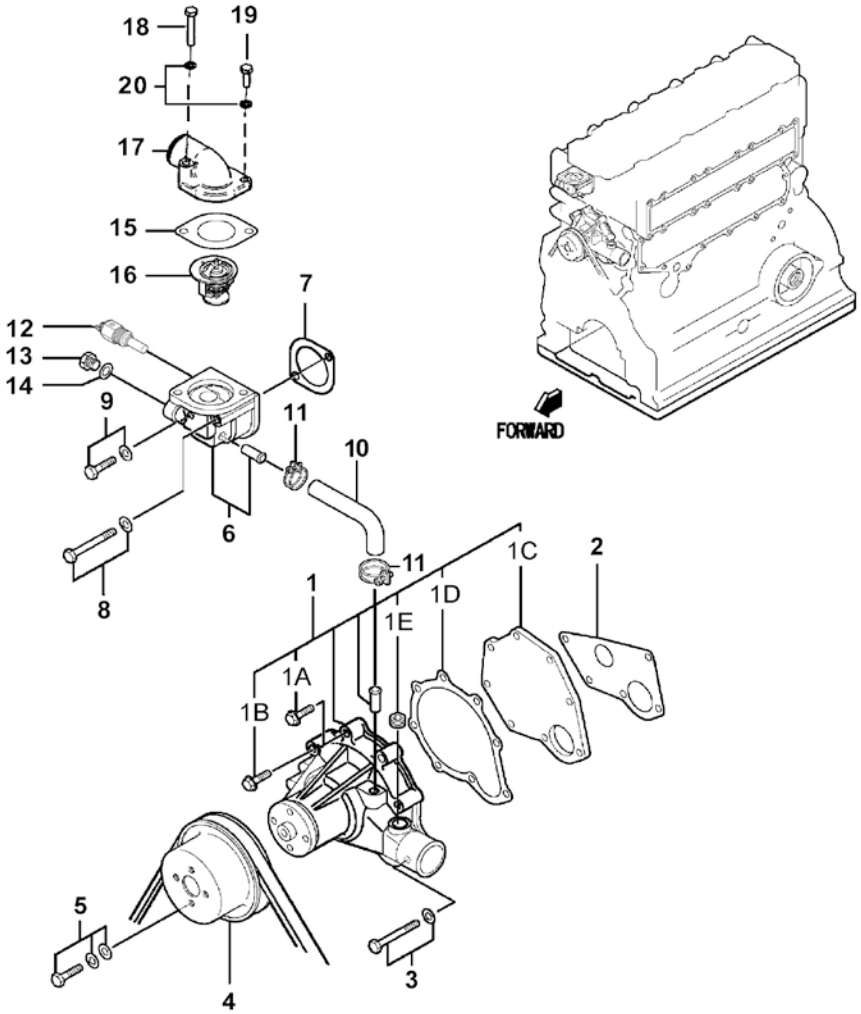

[NP] Not provided
[NS] Not shown

Cooling System

D_MI74_3_2			Cooler Pipes		
FIG.	REF.	QTY	DESCR.	FROM	UPTO
1	17811000	1	Water Cooler Assy SM-82/94 [NP]	30/01/2018	
1	17411000	1	Water Cooler Assy MINI-74 [NP]		29/01/2018
2	36511000	1	1" Water Pump, Set		
3	14711021	3	Hose Nº 1		
4	14711022	1	Hose Nº 2		
5	54082032	6	Clamp DIN 3017 32-50/12 W4		
6	15211026	1	Elbow,rubber		
7	17011022	1	Pipe,from cooler to engine		
8	17411013	1	Elbow,Engine Water Exhaust		
9	16711016	1	Rubber Elbow		
10	17111020	1	FITTING,water outlet		
11	13211036	1	Pipe 30-40-100		
12	17411011	1	Pipe		
13	14711029	1	Pipe		
14	17411034	1	Hose		
15	17511014	1	Bracket		
16	52120006	1	Nut DIN 934 M6 8.8		
17	53033006	1	Washer GROWER DIN 127-6		
18	52102259	1	Bolt DIN 933 M8-30 8.8		
19	53033008	1	Washer GROWER DIN 127-8		
20	59071383	1	Clamp TYP.1 38/15 W1		
21	52102157	1	Bolt DIN 933 M6-20 8.8		
22	51030006	1	Washer DIN 125-6		
23	17421035	1	Gasket,Exhaust MANIFOld		
24	13311006	4	Stud,cover	30/01/2018	
24	17411015	8	Stud		29/01/2018
25	56000057	8	Washer 8-13-1,5		29/01/2018
25	52102258	4	Bolt DIN 933 M8-25 8.8	30/01/2018	
26	55122008	8	Nut DIN 1587 M8		29/01/2018
26	53038008	4	Washer DIN 6798-A 8	30/01/2018	
27	54082025	4	Clamp DIN 3017 25-40/12 W4		
28	51125008	4	Nut Exhaust	30/01/2018	

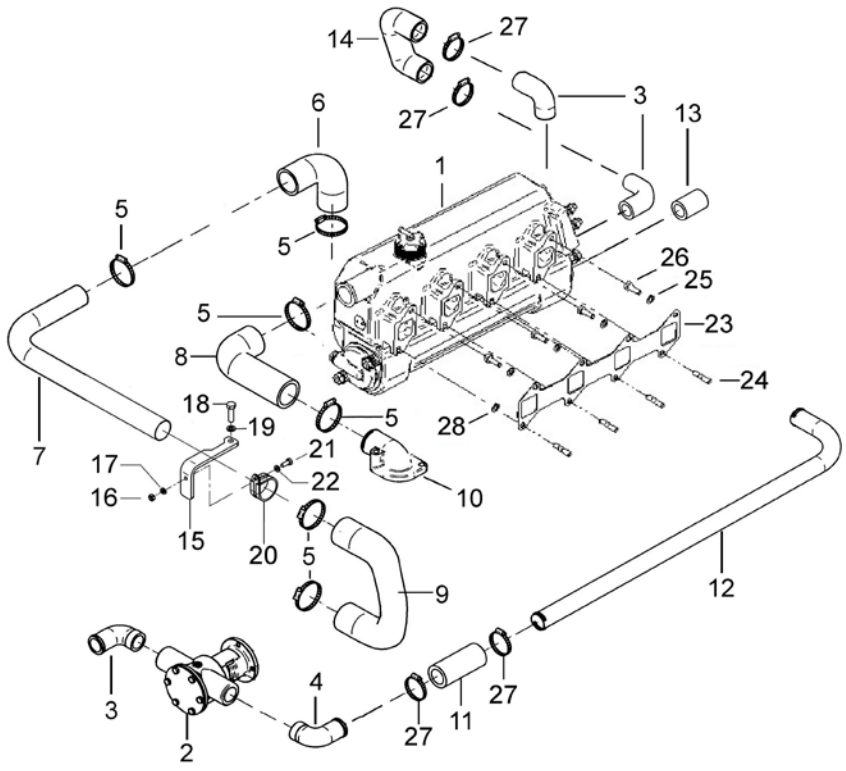

[NP] Not provided

Cooling System

17811000			Water Cooler Assy SM-82/94		
FIG.	REF.	QTY	DESCR.	FROM	UPTO
1	17811001	1	Body, Warter Cooler [NP]		
2	18011004	1	Tubular Bundle		
3	18011008	2	O-Ring D. 72X3		
4	17411003	1	Water Cooler Cover		
5	16511007	8	Stud		
6	51030010	4	Washer DIN 125-10		
7	53033010	8	Washer GROWER DIN 127-10		
8	52120010	4	Nut DIN 934 M10 8.8		
9	56000061	1	Washer 10-16-1,5	07/03/2017	
10	54102306	1	Bolt DIN 933 M10-16 INOX.		
11	56000073	2	Copper Washer 16-23-1,5		
12	12111076	1	Plug		
13	18011002	1	Water Cooler Cover		
14	18011031	1	Engine Anode		
15	18011009	1	Anode Plug		
16	12113092	1	Plug		
17	13811010	1	Cap		
18	17111011	1	Elbow 1 1/8"		
19	55120110	4	Nut DIN 934 M10		

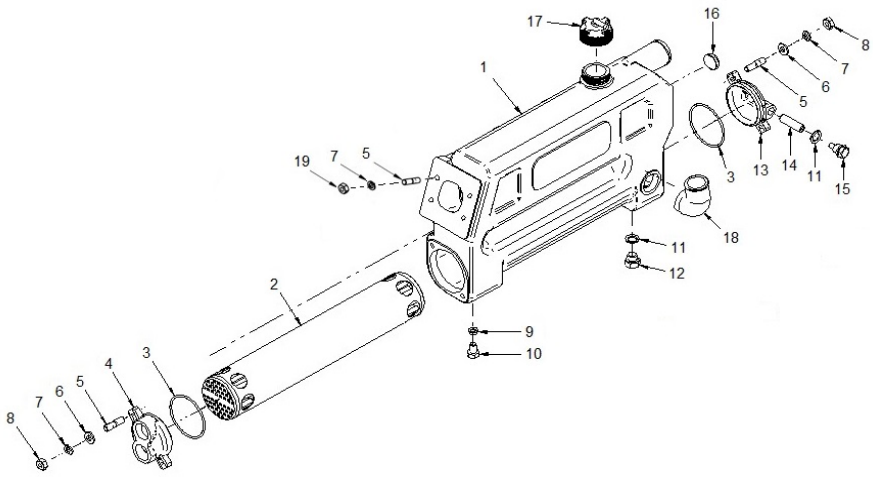

[NP] Not provided

Cooling System

17411000			Water Cooler Assy MINI-74		
FIG.	REF.	QTY	DESCR.	FROM	UPTO
1	17411001	1	Body, Water Cooler [NP]		
2	18011004	1	Tubular Bundle		
3	18011008	2	O-Ring D. 72X3		
4	17411003	1	Water Cooler Cover		
5	16511007	4	Stud		
6	51030010	4	Washer DIN 125-10		
7	53033010	4	Washer GROWER DIN 127-10		
8	52120010	4	Nut DIN 934 M10 8.8		
9	56000205	1	Washer 10-16-3		
10	54102306	1	Bolt DIN 933 M10-16 INOX.		
11	56000073	2	Copper Washer 16-23-1,5		
12	12111076	1	Plug		
13	18011002	1	Water Cooler Cover		
14	18011031	1	Engine Anode		
15	18011009	1	Anode Plug		
16	12113092	1	Plug		
17	13811010	1	Cap		
18	17111011	1	Elbow 1 1/8"		
19	19613016	4	Turbo Stud M8-M10	31/05/2017	

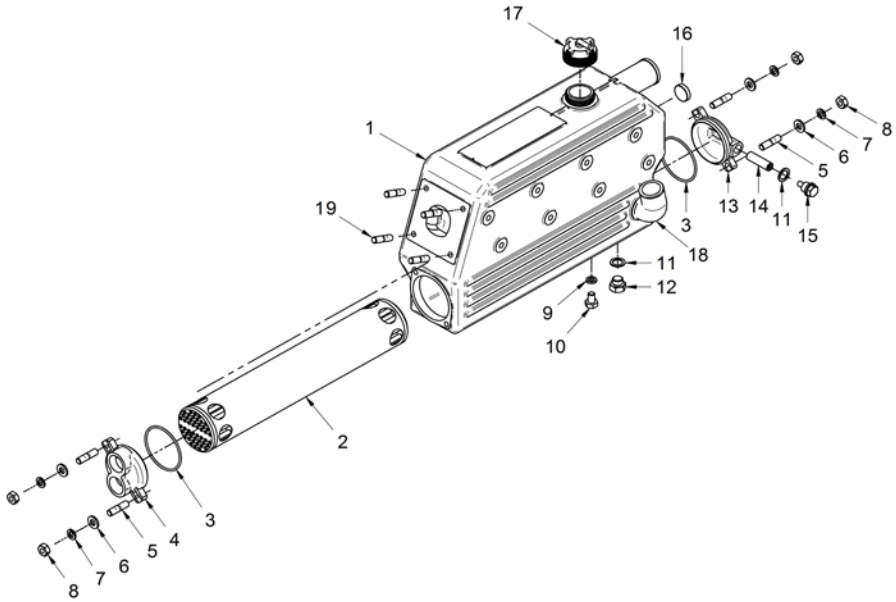

[NP] Not provided

Cooling System

17411001C			Body, Water Cooler And Cap		
FIG.	REF.	QTY	DESCR.	FROM	UPTO
1	17411001	1	Body, Water Cooler [NP]		
2	13811010	1	Cap		
3	12113092	1	Plug		
4	56000073	1	Copper Washer 16-23-1,5		
5	12111076	1	Plug		
6	17111060	1	Plate "SOLE Diesel" [NP]		
7	17111062	2	Bolt		
8	17111011	1	Elbow 1 1/8"		

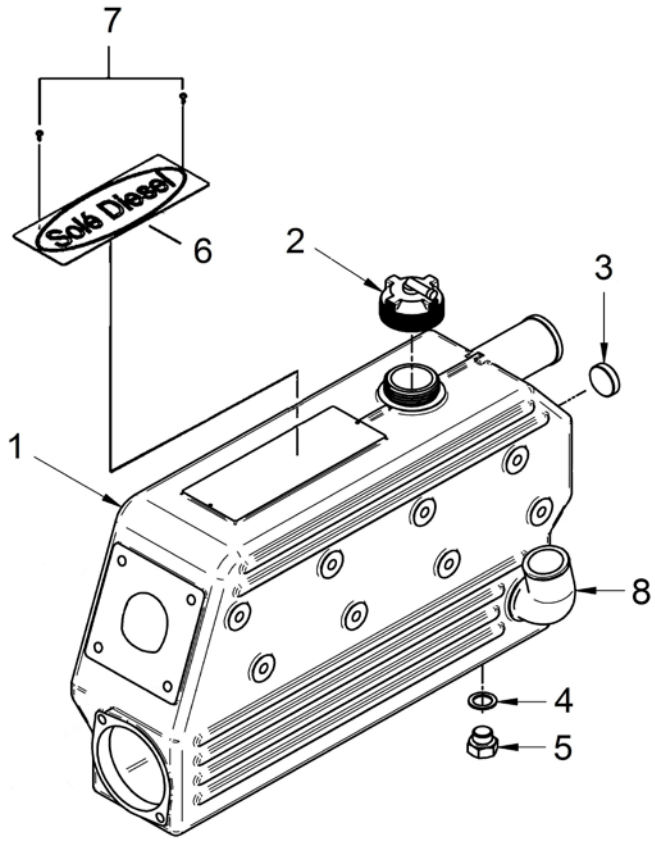

[NP] Not provided

Cooling System

D_MI74_3_3			Wet Exhaust		
FIG.	REF.	QTY	DESCR.	FROM	UPTO
1	16613015	1	Elbow, wet exhaust		
2	16513002	1	Exhaust Elbow Gasket		
3	14711021	1	Hose Nº 1		
4	19613016	4	Turbo Stud M8-M10	31/05/2017	
4	16511007	4	Stud		30/05/2017
5	53033008	4	Washer GROWER DIN 127-8	31/05/2017	
5	53033010	4	Washer GROWER DIN 127-10		30/05/2017
6	55120110	4	Nut DIN 934 M10		30/05/2017
6	54120008	4	Nut DIN 934 M8	31/05/2017	

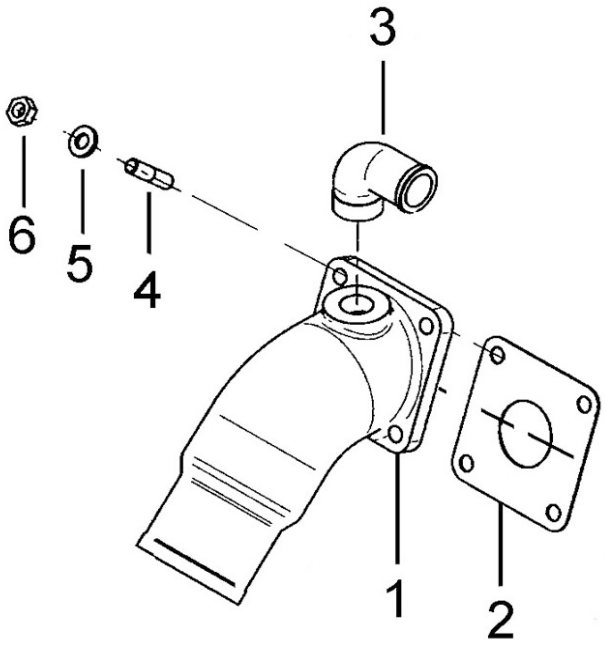

Cooling System

36511000			1" Water Pump, Set		
FIG.	REF.	QTY	DESCR.	FROM	UPTO
1	34711002	1	Cover Pump		
2	34711003	1	Gasket Cover		
3	34711041	1	Impeller Plug		
4	34711008	1	1" Impeller		
5	34711005	1	Cam		
5	37811005	1	Cam 6,5 mm	23/05/2017	25/09/2017
6	34711026	1	Plate,Friction		
7	54040016	1	CIRClip E-16		
8	36511018	1	Washer,seal		
9	36511019	1	Seal		
10	33311013	1	O-Ring D. 15X2		
11	36511001	1	Body,water pump		
12	36511017	1	Pin,Dowel	18/05/2007	
13	54108154	1	Bolt DIN 84 M6-10		
14	54102154	6	Bolt DIN 933 M6-10 INOX		
15	36511010	1	Shaft,pump		
16	36511015	1	Spacer 17X24X7		
17	33311014	2	Ball Bearing 6203		
18	53040017	1	CIRClip DIN 471 E-17		
19	36511020	1	Seal 16-30-7		
20	53041040	1	CIRClip DIN 472 I-40		

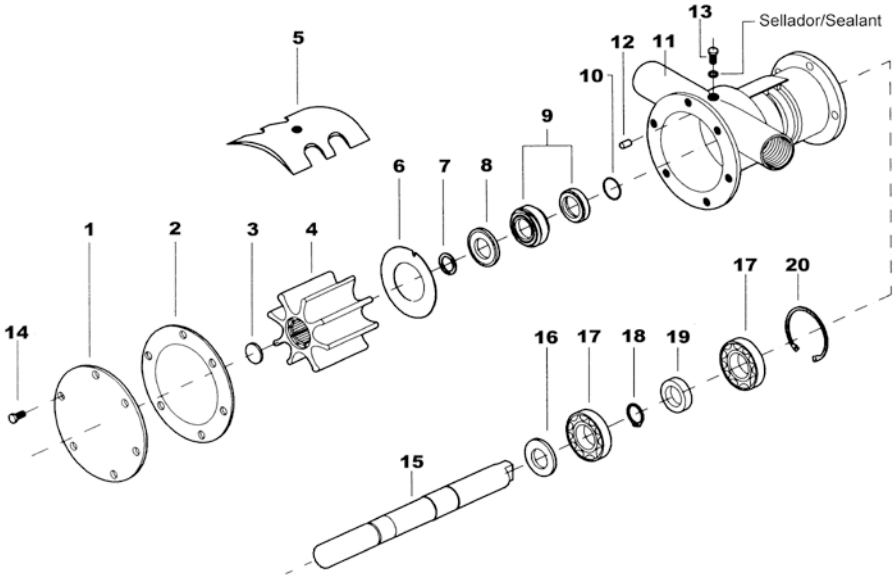

Fuel System

D_MI74_4_1			Fuel Pipe		
FIG.	REF.	QTY	DESCR.	FROM	UPTO
1	17425001	1	Pump Assy,Fuel Injection		
1A	D_MI74_4_3	1	Fuel Injection Pump [NP]		
1B	D_MI74_4_4	1	Governor Parts [NP]		
1C	17425002	1	Cover,Control		
1D	13325274	1	Nut DIN 934 M12 8.8 [NP]		
1E	13325268	1	KEY WOODRUFF		
1F	13325273	1	Washer		
1G	13325100	1	Pump Feed		
1H	17425003	1	Bolt,W/Washer		
1I	17425004	6	Bolt,W/Washer		
2	13824024	4	Nut		
3	17424025G.1	4	Gasket Fuel Return (Genset)		
4	13824013	4	Injector Washer		
5	17424015	1	Pipe Injection N.1		
6	17424016	1	Pipe Injection N.2		
7	17424019	1	Pipe Injection N.3		
8	17424022	1	Pipe Injection N.4		
9	13124018	3	Clamp (A)		
10	13124017	3	Clamp (B)		
11	17524025	3	Bolt,W/Washer		
12	17424004	1	Assy,Fuel Return		
13	17424005	1	Pipe,Fuel		
14	17424025	1	Bolt,W/Washer		
15	17425036	1	Bolt,Flange		
16	13321016	1	Washer GROWER DIN 127-8 [NP]		
17	17120049	1	Nut M8		
18	17424027	1	JOINT,EYE		
19	17425005	1	Flange,INJ.Pump		
20	17420047	1	O-Ring D. 140X2		
21	17425028	1	Gasket		
22	17425029	4	Bolt,W/Washer		
23	17121012	1	Bolt, w/washer		
24	17424032	1	Connector		
25	17424033	1	Pipe,Oil		
26	17424034	1	Bracket,INJ.Pump		

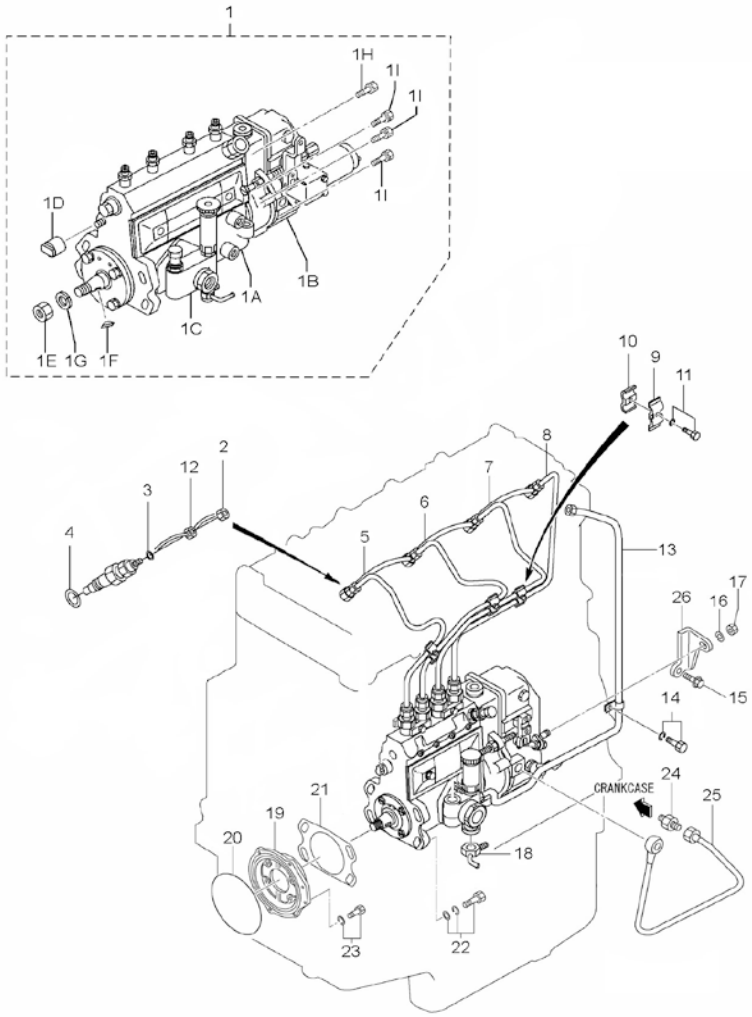

[NP] Not provided

D_MI74_4_2			Injection Nozzle		
FIG.	REF.	QTY	DESCR.	FROM	UPTO
1	17126001	4	Nozzle, Assy		
2	17126003	4	Holder		
2A	17126002	4	Body, Assy		
2B	13826003	4	Pin Pressure		
2C	17126004	4	Spring, pressure		
2D	17226006	4	Nut, Nozzle RETAINING		
2E	13826007	4	PIECE DISTANCE		
2F	17126022	0	Washer 0.950 [VAR]		
2F	13826017	0	Washer 1,60 [VAR]		
2F	13826016	0	Washer 1,55 [VAR]		
2F	17126024	0	Washer 1.000 [VAR]		
2F	17126045	0	Washer 1.525 [VAR]		
2F	17126023	0	Washer 0.975 [VAR]		
2F	17126027	0	Washer 1.075 [VAR]		
2F	17126058	0	Washer 1.850 [VAR]		
2F	17126025	0	Washer 1.025 [VAR]		
2F	17126062	0	Washer 1.950 [VAR]		
2F	17126033	0	Washer 1.225 [VAR]		
2F	17126056	0	Washer 1.800 [VAR]		
2F	13826015	0	Washer 1,50 [VAR]		
2F	13826010	0	Washer 1,25 [VAR]		
2F	17126030	0	Washer 1.150 [VAR]		
2F	13826014	0	Washer 1,45 [VAR]		
2F	17126053	0	Washer 1.725 [VAR]		
2F	17126057	0	Washer 1.825 [VAR]		
2F	13826011	0	Washer 1,30 [VAR]		
2F	17126049	0	Washer 1.625 [VAR]		
2F	17126047	0	Washer 1.575 [VAR]		
2F	13826013	0	Washer 1,40 [VAR]		
2F	17126051	0	Washer 1.675 [VAR]		
2F	17126054	0	Washer 1.750 [VAR]		
2F	17126055	0	Washer 1.775 [VAR]		
2F	17126061	0	Washer 1.925 [VAR]		
2F	17126037	0	Washer 1.325 [VAR]		
2F	17126020	0	Washer 0.900 [VAR]		

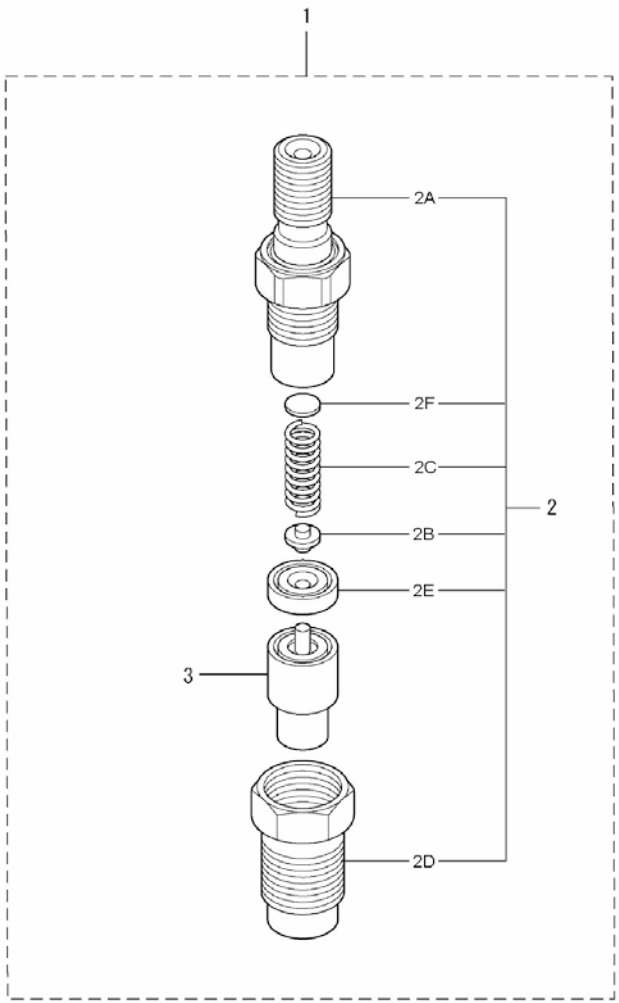

[VAR] Variable according to repair

D_MI74_4_2			Injection Nozzle		
FIG.	REF.	QTY	DESCR.	FROM	UPTO
2F	17126039	0	Washer 1.375 [VAR]		
2F	13826012	0	Washer 1,35 [VAR]		
2F	13826019	0	Washer 1,65 [VAR]		
2F	17126029	0	Washer 1.125 [VAR]		
2F	17126028	0	Washer 1.100 [VAR]		
2F	17126031	0	Washer 1.175 [VAR]		
2F	17126043	0	Washer 1.475 [VAR]		
2F	17126021	0	Washer 0.925 [VAR]		
2F	17126060	0	Washer 1.900 [VAR]		
2F	17126035	0	Washer 1.275 [VAR]		
2F	13826020	0	Washer 1,70 [VAR]		
2F	17126059	0	Washer 1.875 [VAR]		
2F	17126041	0	Washer 1.425 [VAR]		
2F	17126032	0	Washer 1.200 [VAR]		
2F	17126026	0	Washer 1.050 [VAR]		
3	13326130	4	TIP Assy Nozzle		

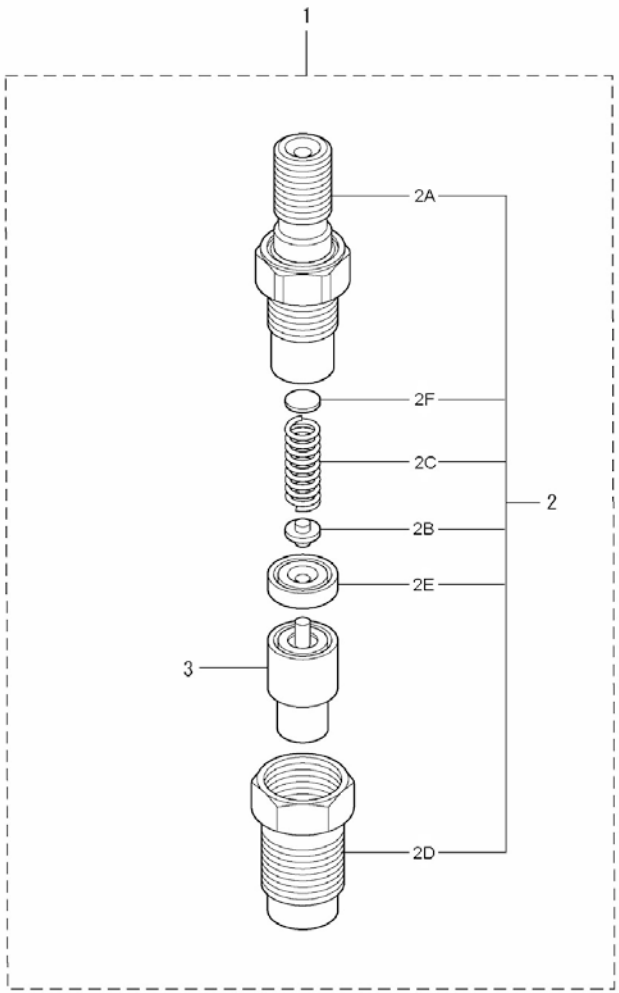

D_MI74_4_3			Fuel Injection Pump		
FIG.	REF.	QTY	DESCR.	FROM	UPTO
1	(*)	1	Not available [NP]		
2	17425005.1	1	Flange,INJ.Pump		
3	13325239	3	Stud		
4	17425046	4	Support SOUPAPE		
5	17425014	4	Spring,Valve		
6	17425012	4	Gasket,Valve		
7	17425008	4	Valve,DELIVERY		
8	17425009	4	Element,Pump		
9	13325241	4	PinION Control		
10	13325240	4	Screw		
11	17425015	4	SLEEVE,Control		
12	17425011	4	SHEET,Upper Spring		
13	13325244	4	Spring Plunger		
14	17425013	4	SHEET,LOWER Spring		
15	13325261	4	Tappet Assy		
16	17425022	4	Plug,Screw		
17	17425023	1	CamShaft		
18	13325226	2	Ring		
19A	13325219	0	Plate 0,1 [VAR]		
19B	13325220	0	Plate 0,12 [VAR]		
19C	13325221	0	Plate 0,14 [VAR]		
19D	13325222	0	Plate 0,16 [VAR]		
19E	13325223	0	Plate 0,18 [VAR]		
19F	13325225	0	Plate 0,5 [VAR]		
19G	13325224	0	Plate 0,3 [VAR]		
19H	17425030	0	Shim Adjusting T=1.00 [VAR]		
19I	17425031	0	Shim Adjusting T=1,50 [VAR]		
19J	17425032	0	Shim Adjusting T=2.00 [VAR]		
19K	17425033	0	Shim Adjusting T=0.03 [VAR]		
20	13325271	1	Cover		
21	17425025	1	Gasket,Bearing Cover		
22	17425006	1	RACK,Control		
23	17425027	1	Screw,RACK Guide		
24	13325202	2	Washer		
25	17425035	2	Plate		

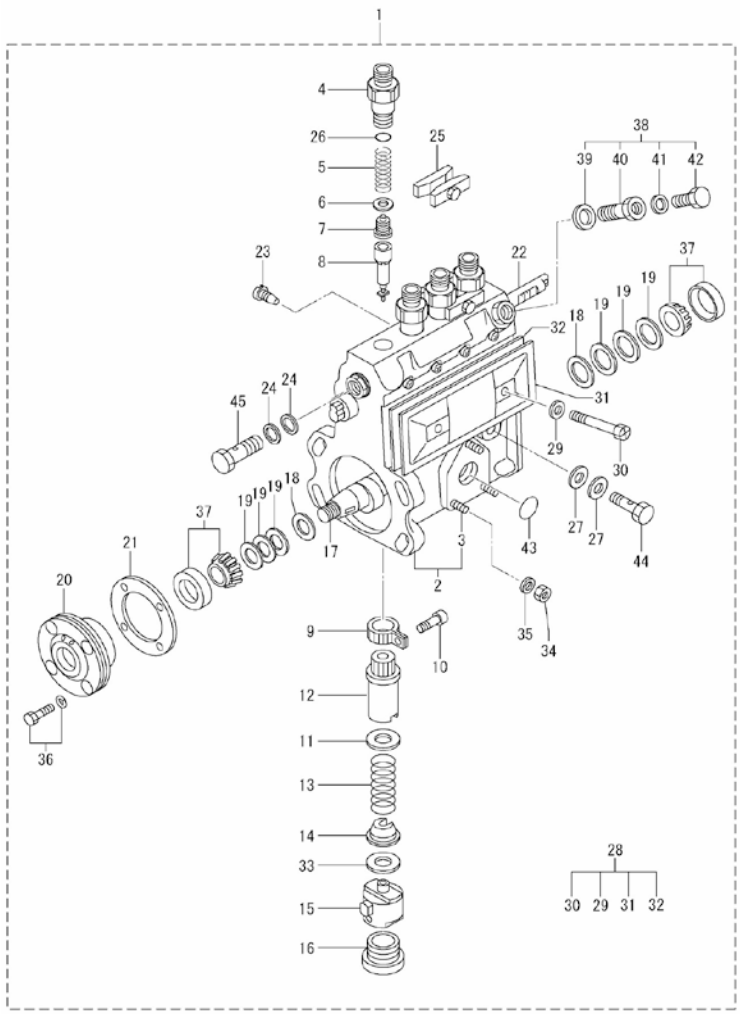

[NP] Not provided

[VAR] Variable according to repair

D_MI74_4_3			Fuel Injection Pump		
FIG.	REF.	QTY	DESCR.	FROM	UPTO
26	17425010	4	O-Ring		
27	13825031.3	2	Washer,DRAIN Union		
28	17425040	1	Cover,Pump		
29	13325215	2	Washer		
30	17425041	2	Screw,HEXAGON		
31	17425042	1	Cover,Plate		
32	17425043	1	Gasket,Cover Plate		
33A	13125014	0	Shim T=0,60 [VAR]		
33B	13325253	0	Shim T=0.70 [VAR]		
33C	13325254	0	Shim T=0.80 [VAR]		
33D	13325255	0	Shim T=0.90 [VAR]		
33E	13325256	0	Shim T=1.00 [VAR]		
33F	13325257	0	Shim T=1.10 [VAR]		
33G	13325258	0	Shim T=1.20 [VAR]		
33H	13325259	0	Shim T=1.30 [VAR]		
33I	13325260	0	Shim T=1.40 [VAR]		
33J	13325246	0	Shim T=0.10 [VAR]		
33K	13125015	0	Shim T=0,2 [VAR]		
33L	13325249	0	Shim T=0.30 [VAR]		
33M	13125017	0	Shim T=0,4 [VAR]		
33N	13125018	0	Shim T=0,5 [VAR]		
33O	13325247	0	Shim T=0.15 [VAR]		
33P	17425034	0	Shim T=0.13 [VAR]		
34	17425019	3	Nut		
35	17425007	3	Washer,Spring		
36	13325272	4	Screw		
37	13325217	2	Conical Roller Bearing 30203		
38	13325212	1	BREATHER Air		
39	13325213	1	Washer NIPPLE		
40	13325214	1	NIPPLE		
41	13325215	1	Washer		
42	13325216	1	Screw		
43	13325234	1	O-Ring		
44	13325231	1	Screw, Racord		
45	13325201	1	Screw,HOLLOW [NP]		

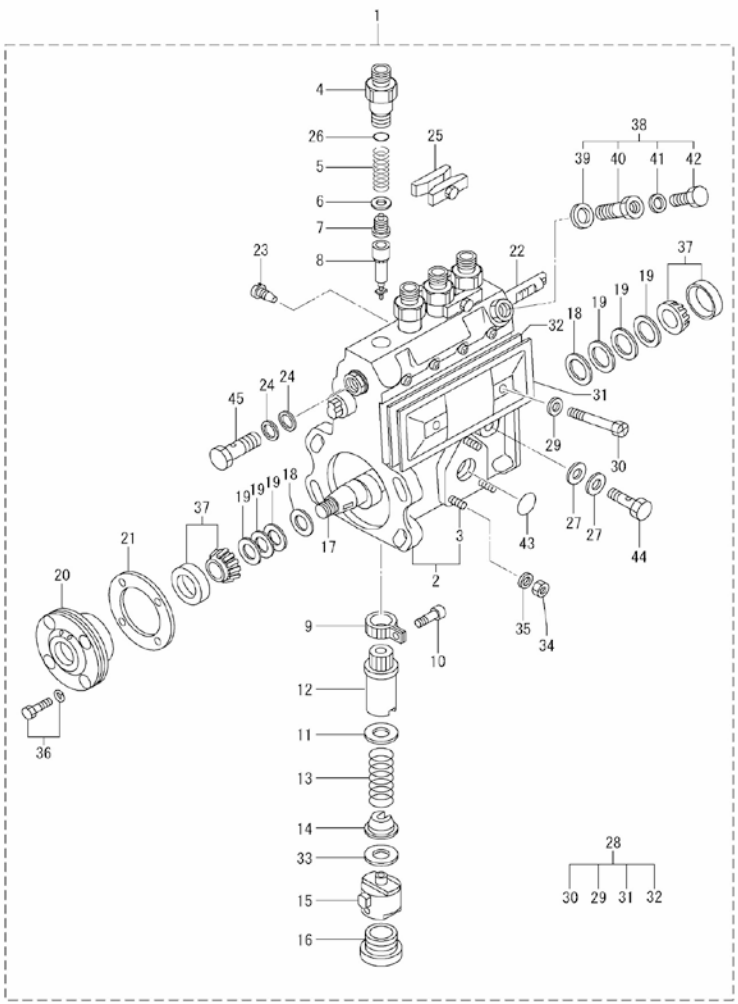

D_MI74_4_4			Governor Parts		
FIG.	REF.	QTY	DESCR.	FROM	UPTO
1	(*)	1	Not available [NP]		
2	17425201	1	Housing,GOverNOR		
3	17425203	1	Plate		
4	17425208	1	Cover,GOverNOR		
5	17425209	1	Pin		
6	17425210	1	Screw,Adjusting		
7	17425217	1	Nut		
8	17425212	1	Screw,Adjusting		
9	17425213	1	Bushing		
10	17425218	1	Lever,TENSION		
11	17425245	1	Lever,TENSION		
12	17425222	1	Shaft,Lever		
13	17425223	2	Plug,Screw		
14	17425246	1	Pin,SPLIT		
15	17425211	2	Nut,W/Hole		
16	17425230	1	CapSULE		
17	17425232	1	Nut,Adapter LOCK		
18	17425247	1	SHACKLE		
19	17425239	1	Bearing,Ball		
20	17425205	1	KEY,WOODRUFF		
21	17425235	1	FLYWEIGHT Assy		
22	13325273	1	Washer		
23	17425237	1	Nut,ROUND		
24	17425238	1	SLEEVE,GOverNOR		
25A	17425240	0	Washer,Plate T=0.2 [VAR]		
25B	17425241	0	Washer,Plate T=0.3 [VAR]		
25C	17425242	0	Washer,Plate T=0.4 [VAR]		
25D	17425243	0	Washer,Plate T=0.1 [VAR]		
25E	17425244	0	Washer,Plate T=1.0 [VAR]		
26	17425250	1	Lever,SWIVELLING		
27	17425227	2	Bushing,Lever		
28	17425226	2	O-Ring		
29	17425251	2	Washer,SNAP		
30	17425220	1	Spring,Control		
31	17425248	1	Spring,START		

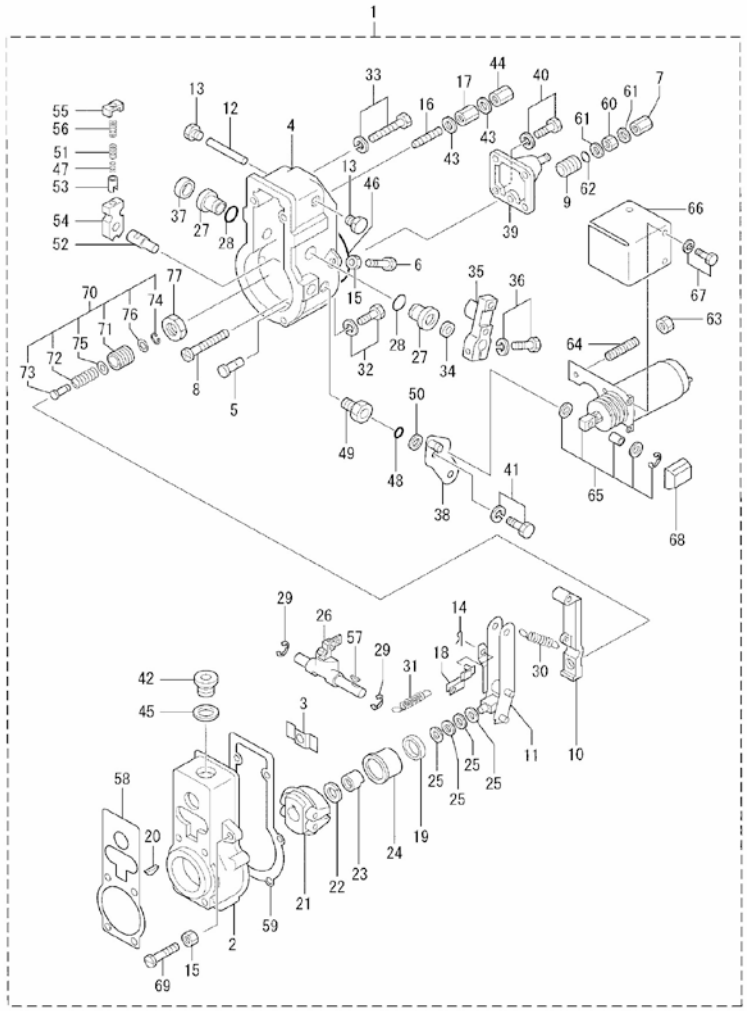

[NP] Not provided

[VAR] Variable according to repair

D_MI74_4_4			Governor Parts		
FIG.	REF.	QTY	DESCR.	FROM	UPTO
32	17425255	4	Bolt,W/Washer		
33	17425300	2	Bolt,W/Washer		
34	17425229	1	Seal,Oil		
35	17425224	1	Lever,Adjusting		
36	17425225	1	Bolt,W/Washer		
37	17425228	1	Cap,Lever		
38	17425259	1	Lever,Stop		
39	17425296	1	Plate,Cover		
40	17425297	1	Bolt,W/Washer		
41	17425260	1	Bolt,W/Washer		
42	17425206	1	Plug,Screw		
43	13325213	2	Washer NIPPLE		
44	17425233	1	Nut,Cap		
45	17425207	1	Washer,COPPER Plate		
46	17425295	1	Packing,Rubber Plate		
47	17425276	1	Spring		
48	17425257	1	O-Ring		
49	17425256G	1	Bushing,Bearing (Generator)		
50	17425270	1	Washer		
51	17425275	1	Spring		
52	17425279	1	Shaft,GOverNOR		
53	17425277	1	SHEET,spring		
54	17425278	1	Lever,Support		
55	17425273	1	Plate,Cap		
56	17425274	1	Spring		
57	17425252	1	KEY,WOODRUFF		
58	17425204	1	Gasket		
59	17425202	1	Gasket		
60	17425215	1	Nut,HEXAGON		
61	17225025	2	Washer, Pipe Union		
62	17425214	1	O-Ring		
63	17425268	3	Nut,HEXAGON		
64	17425269	3	Bolt,Stud		
66	17425280	1	Plate		
67	17425281	3	Bolt,W/Washer		
68	17425265	1	Cover		
69	17425210	1	Screw,Adjusting		

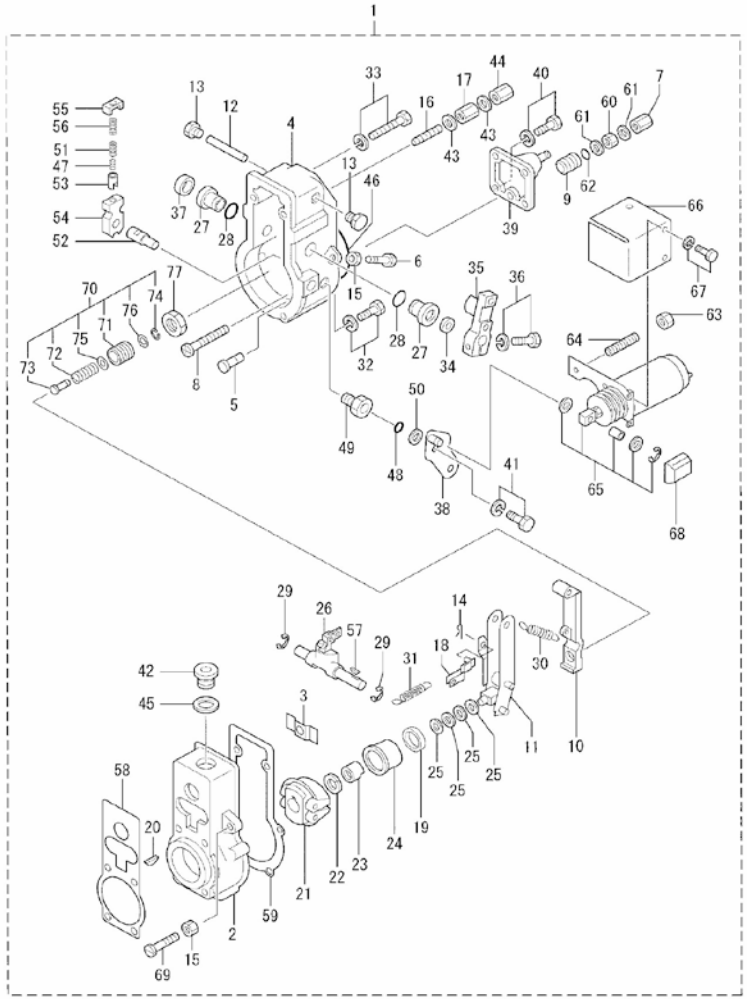

D_MI74_4_4.2			Governor Parts		
FIG.	REF.	QTY	DESCR.	FROM	UPTO
70	17425283.1	1	Adapter [NP]		
71	17425267	1	Screw,Adapter [NP]		
72	17425284	1	SPRINT,GOverNOR [NP]		
73	17425283	1	Adapter		
74	17025033	1	Washer		
75A	17425285	0	Washer T=0.10 [VAR]		
75B	17425286	0	Washer T=0.25 [VAR]		
75C	17425287	0	Washer T=0.50 [VAR]		
75D	17425288	0	Washer T=0.20 [VAR]		
76	17425289	1	Washer [NP]		
77	17425292	1	Nut		

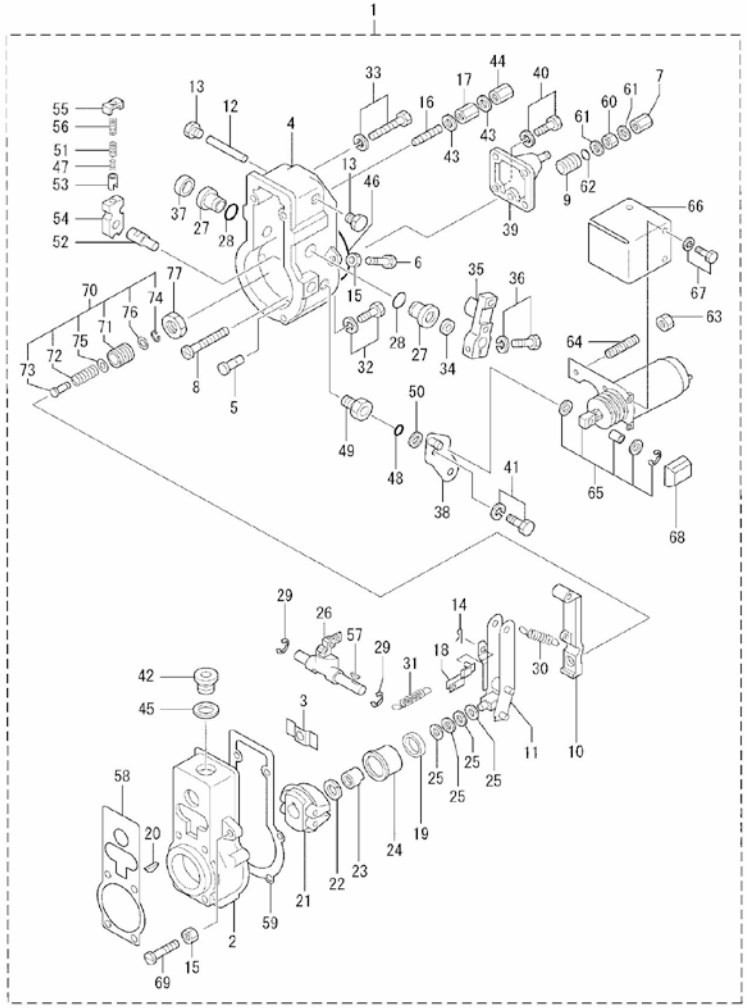

[NP] Not provided

[VAR] Variable according to repair

Fuel System

D_MI74_4_5			Fuel Filter		
FIG.	REF.	QTY	DESCR.	FROM	UPTO
1	17424020	1	Fuel Filter Assy		
2	17424001	1	Bracket,Fuel Filter		
3	17414022	1	Gas-Oil Filter Element		
4	17424003	2	Bolt,EYE		
5	17424008	4	Washer,SealING		
6	13324072	1	Plug		
7	13324011	1	Washer		
8	17424002	1	Bracket,Fuel Filter		
9	17121012	2	Bolt, w/washer		
10	17120062	2	Bolt,w/washer		
11	17424007	1	Hose,Fuel		
12	13324068	1	Hose		
13	17424026	1	Clamp,Pipe		

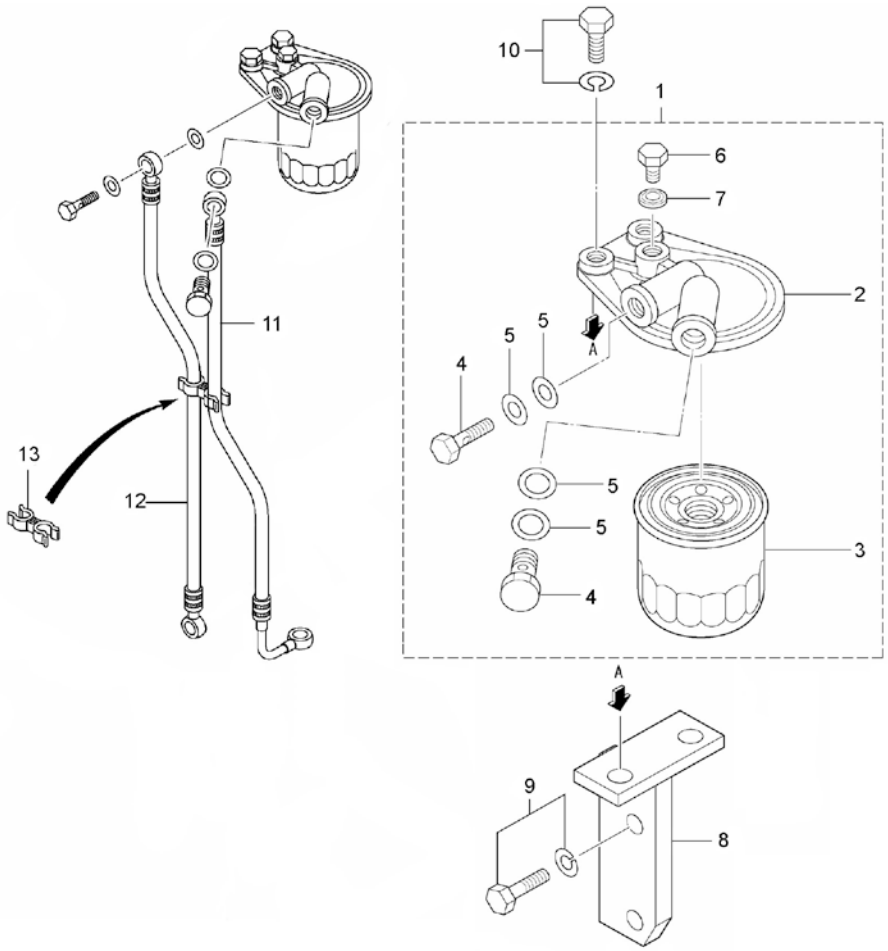

D_MI74_4_6			Feed Pump		
FIG.	REF.	QTY	DESCR.	FROM	UPTO
1	13325100	1	Pump Feed		
2	13325107	1	Housing Feed Pump		
3	13325120	1	ROD,PUSH		
4	13325106	2	Valve		
5	13325105	2	Spring		
6	13325104	2	Washer		
7	13325103	1	Support		
8	17425102	1	Pump S/Assy,PRIMING		
9	13325112	1	Screw, Racord		
10	17425106	4	Washer,Pipe Union		
11	13325115	1	Tappet		
12	13325118	1	Roller		
13	13325117	1	Pin,Roller		
14	13325116	2	Block		
15	13325119	2	Ring		
16	13325110	1	Spring		
17	13325109	1	Washer		
18	13325108	1	Plug		
19	13325113	1	Filter		
20	13325111	1	Piston		
21	17425105	1	Srew,Hollow		
NS	17425121	1	Seal,Oil [NS]		

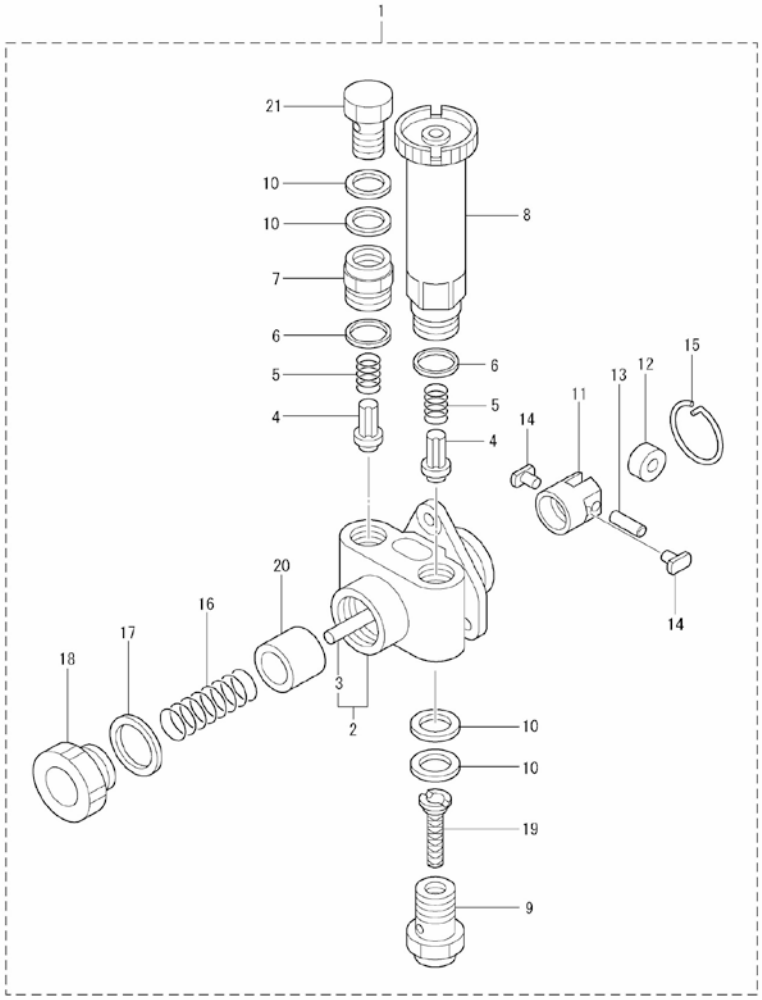

[NS] Not shown

D_MI74_5_1			Kit Alternator 14V/110A		
FIG.	REF.	QTY	DESCR.	FROM	UPTO
1	17417019P	1	Kit Alternator 14V/95A ISKRA [NP]		
2	17427007	1	Plate,Adjusting		
3	17427002.2	1	Bracket,Alternator		
4	17121012	2	Bolt, w/washer		
5A	52202309	2	Bolt DIN 933 M10-1,25-30 8.8		
5B	53038010	2	Washer DIN 6798-A 10		
6	51031008	1	Washer DIN 9021 8		
7	13827012	1	Bolt		
8	60574028	1	V-Belt		

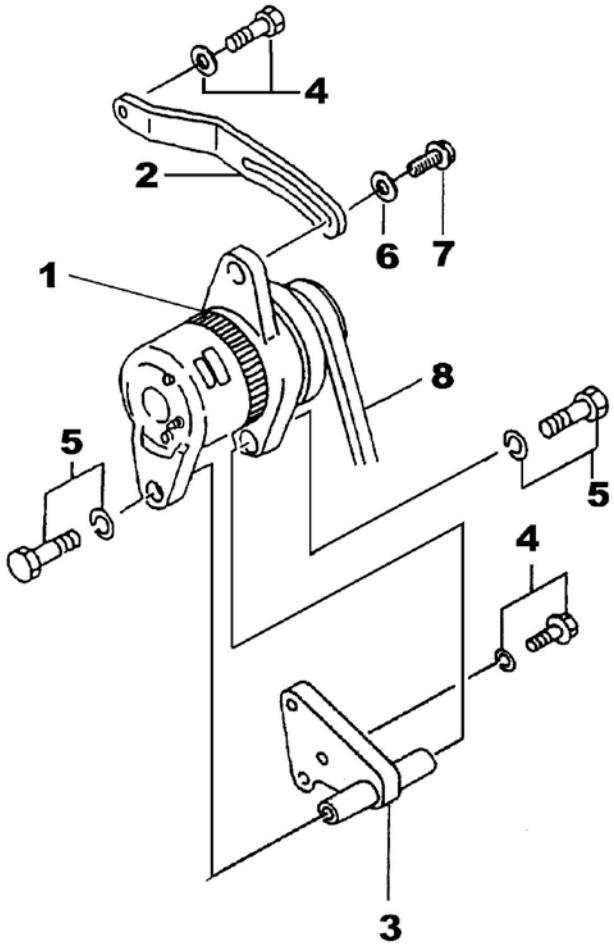

[NP] Not provided

12V Electrical System

17417053			Kit Alternator 14V/95A ISKRA		
FIG.	**REF.**	**QTY**	**DESCR.**	**FROM**	**UPTO**
1	17427002.4	1	Bracket, Alternator 14V/95A		
2	17417026	1	Alt. 14V/95A		
3	52102259	1	Bolt DIN 933 M8-30 8.8		
4	51031008	1	Washer DIN 9021 8		
5	53033008	1	Washer GROWER DIN 127-8		
6	52120008	2	Nut DIN 934 M8 8.8		
7	17417025	1	Spacer 13.5x10.2x11	09/09/2015	
8	53038010	1	Washer DIN 6798-A 10		
10	52101325	1	Bolt DIN 931 M10-120 8.8		
11	17117016.7	1	Pulley		
12	13817017	1	Spacer 17X28X5,5		
13	51030005	2	Washer DIN 125-5		
15	52120005	1	Nut DIN 934 M5 8.8		
16	TR.10.8	1	Ring Terminal 10 Sec.		
17	51030008	1	Washer DIN 125-8		

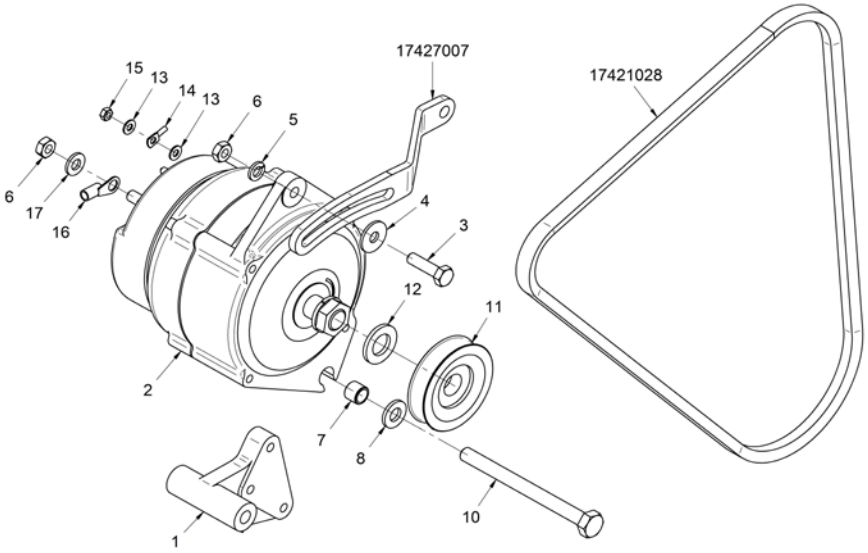

	D_MI74_5_3		Starter		
FIG.	**REF.**	**QTY**	**DESCR.**	**FROM**	**UPTO**
1	17427001G	1	Starter Assy 12 V		

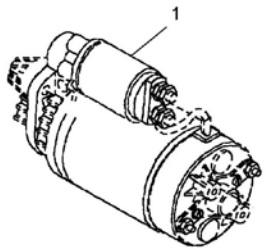

12V Electrical System

D_MI74_5_5			12V Electrical Wiring		
FIG.	REF.	QTY	DESCR.	FROM	UPTO
1	60974125.2	1	Panel TE3 MINI-74/SM-105		
2	60900931	4	SOCKET,WEDGE BASE		
3	60900929	4	Bulb 12V		
4	60900925R	1	VOLTMETER 12 V		
5	60974910	1	Tachometer MINI-74		
6	60900920R	1	Oil Pressure Gauge 12 V		
7	54108003	1	Bolt DIN 84 M3-8 INOX.		
8	60900119	1	Fuse 0.5A		
9	60900301.2	1	V3 C.I. 12V Prop. Engine Board.Varnished [NP]	23/06/2015	
10	60900915R	1	Water Gauge 12 V		
11	60990006	1	Gasket Panel		
12	60900037	1	Key-Locking		
13	60900038	1	Cover,KEY		
14	60990005	1	Panel N.3		
15	60900121	1	FuseHolder, panel		
16	60900118	1	Fuse 10 A.		
17	60900036	1	Key,Starter Switch		
18	60974200R.2	1	Inst. Elect. MINI-74 ISKRA		
19	60985210	1	Engine Wiring Ext. 4 M.		
20	17427018	1	Plate Glow Plug		
21	17127017	4	Plug, glow		
22	17425264	1	Stop SOLENOID		
23	17417001	1	Support, Relay		
24	13817005	1	Relay 6V		
25	52102104	1	Bolt DIN 933 M5-10 8.8		
26	51030005	1	Washer DIN 125-5		
27	52102156	2	Bolt DIN 933 M6-16 8.8		
28	51030006	2	Washer DIN 125-6		
29	13827005	1	Glow Relay		

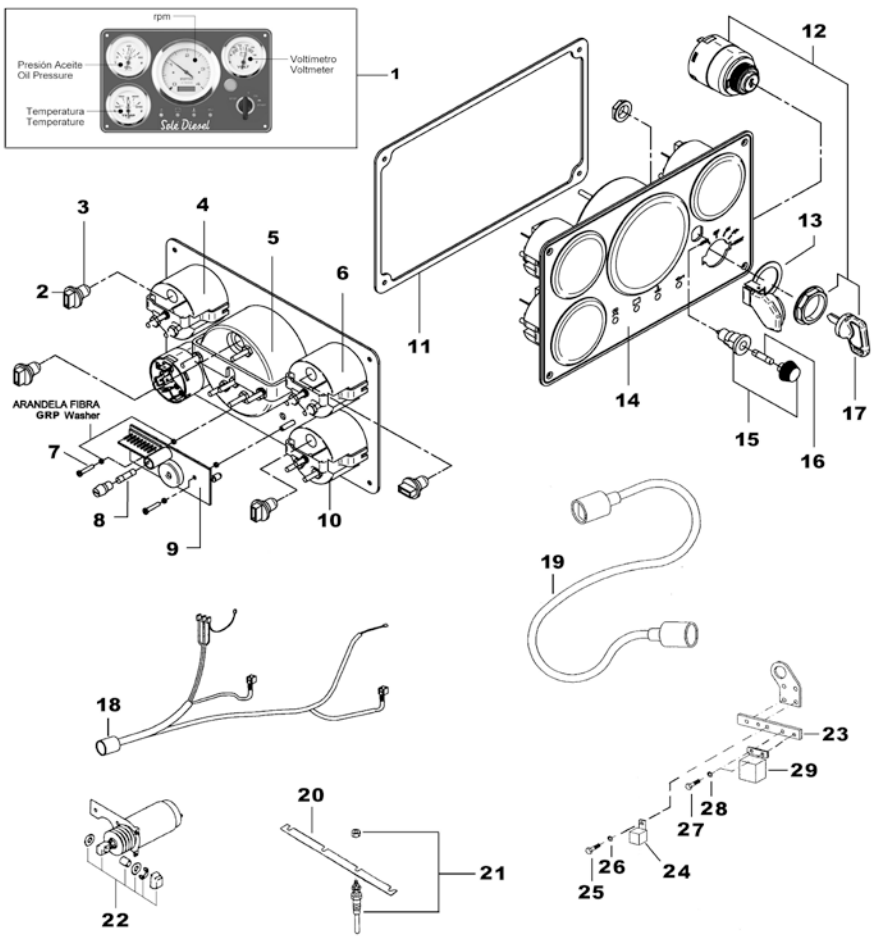

[NP] Not provided

12V Electrical System

D_60974130			SVT 30 MINI-74/SM-105 Panel		
FIG.	REF.	QTY	DESCR.	FROM	UPTO
1	54108003	2	Bolt DIN 84 M3-8 INOX.		
2	60900037	1	Key-Locking		
3	60900037.2	1	Connector		
4	60900910.2	5	Nut 8-32 W/CapTIVE STAR Washer		
5	60900931	4	SOCKET,WEDGE BASE		
6	60900929	4	Bulb 12V		
7	60990005.1	1	Panel N.3		
8	60990006.1	1	Gasket Panel		
9	60900096	1	Cover Plate for Motor Propeller		
10	60900301.2	1	V3 C.I. 12V Prop. Engine Board.Varnished [NP]		
11	60900910.1	1	MTG Bracket 3" LG GA AMEGA		
12	60900915.2	3	MTG Bracket		
13	60900941	1	VOLTMETER 12V		
14	60974911	1	Tachometer MINI-74/105 SVT		
15	60900937	1	Water Gauge 12 V		
16	60900939	1	Oil Pressure Gauge 12V		
NS	60910014	1	System Back Panel SVT/MVT 30 12V [NS]	07/12/2016	
NS	60900091	1	MICRO Relay 12V 12-20 [NS]		

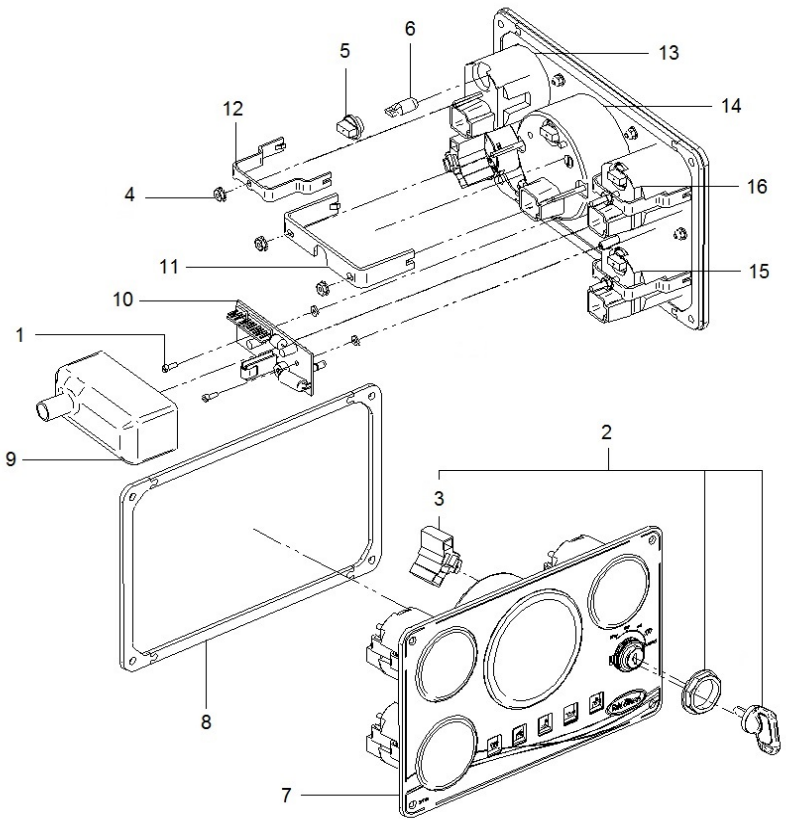

[NP] Not provided
[NS] Not shown

D_MI74_6_1			Kit Alternator 28V/55A		
FIG.	REF.	QTY	DESCR.	FROM	UPTO
1	17417024	1	Alternator 28V/55A		
2	17427007	1	Plate,Adjusting		
3	17427002.2	1	Bracket,Alternator		
4	17121012	2	Bolt, w/washer		
5A	52202309	2	Bolt DIN 933 M10-1,25-30 8.8		
5B	53038010	2	Washer DIN 6798-A 10		
6	51031008	1	Washer DIN 9021 8		
7	13827012	1	Bolt		
8	17521028	1	Belt Type AX 45 1175		
9	17417022	1	Pulley		
NS	17117022	1	Pulley Alternator, Type A [NS]	18/07/2017	

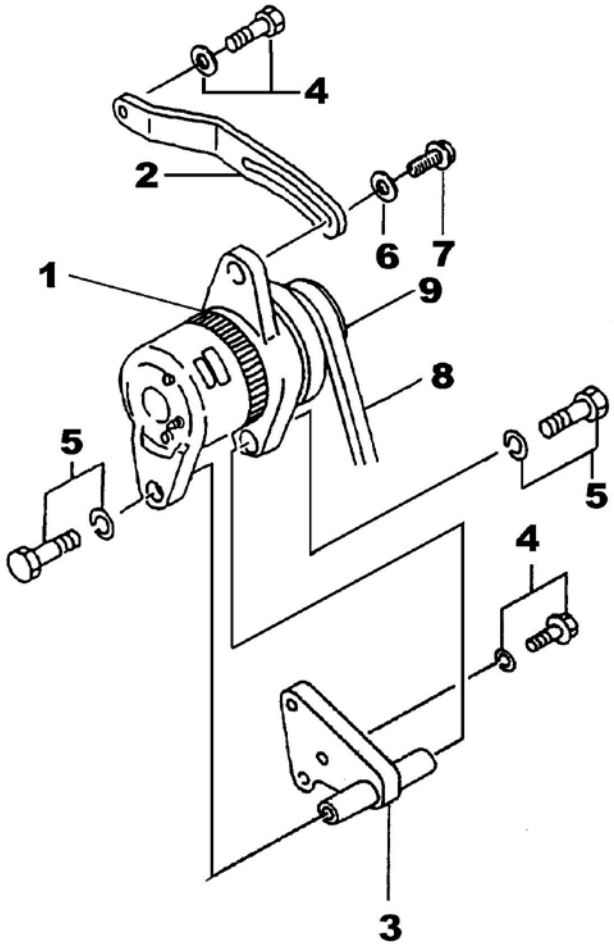

[NS] Not shown

	D_MI74_6_3		Starter		
FIG.	**REF.**	**QTY**	**DESCR.**	**FROM**	**UPTO**
1	17527001.2	1	Starter Assy 24V		

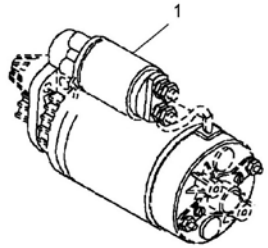

24V Electrical System

D_MI74_6_5			24V Electrical Wiring		
FIG.	REF.	QTY	DESCR.	FROM	UPTO
1	60975125.2	1	Panel TE3 MINI-74/SM-105 24V		
2	60900931	4	SOCKET,WEDGE BASE		
3	60900930	4	Bulb GE400 WEDGE BASE 24V		
4	60900926R	1	VOLTMETER 24 V		
5	60975911	1	TACHOMETER SM-105 24V.		
6	60900921R	1	Oil Pressure Gauge 24 V		
7	54108003	1	Bolt DIN 84 M3-8 INOX.		
8	60900119	1	Fuse 0.5A		
9	60900302.1	1	Integrated Circuit Plate 24V		
10	60900916R	1	Water Gauge 24 V		
11	60990006	1	Gasket Panel		
12	60900037	1	Key-Locking		
13	60900038	1	Cover,KEY		
14	60990005	1	Panel N.3		
15	60900121	1	FuseHolder, panel		
16	60900118	1	Fuse 10 A.		
17	60900036	1	Key,Starter Switch		
18	60900933	2	VOLTAGE REDUCER 7W		
19	60900932	1	VOLTAGE REDUCER 5W 100 ohm TE		
20	17427018	1	Plate Glow Plug		
21	17527017.2	4	Glow Plug 24V		
22	17525264.2	1	Stop Solenoid 24V		
23	17417001	1	Support, Relay		
24	17417005.1	1	Relay 24V 24-22A		
25	52102104	1	Bolt DIN 933 M5-10 8.8		
26	51030005	1	Washer DIN 125-5		
27	52102156	2	Bolt DIN 933 M6-16 8.8		16/11/2016
27	52102154	2	Bolt DIN 933 M6-10 8.8	17/11/2016	
28	51030006	1	Washer DIN 125-6		
29	17417005	1	Relay 24V 24-100		
30	60974200R.2	1	Inst. Elect. MINI-74 ISKRA		
31	60985210	1	Engine Wiring Ext. 4 M.		

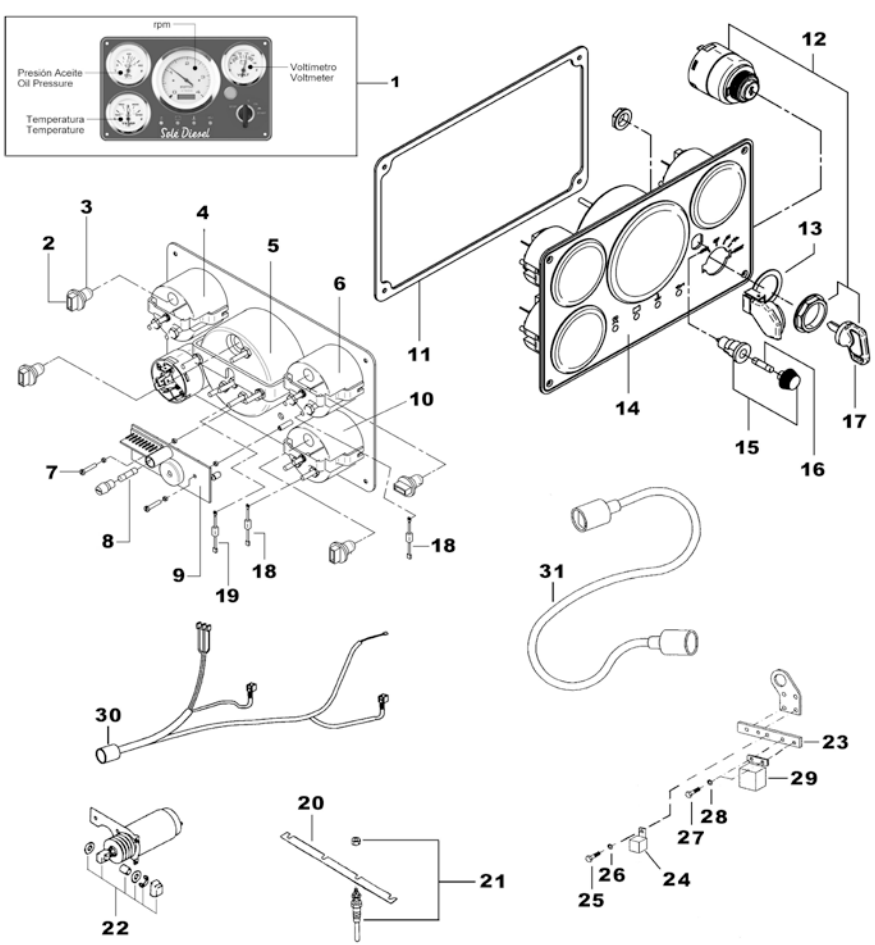

Maintenance Kit

D_17420101			Gasket Kit		
FIG.	REF.	QTY	DESCR.	FROM	UPTO
0	17420101	1	Gasket Kit		
1	56000073	1	Copper Washer 16-23-1,5		
2	17111021	1	Gasket		
3	17421016G.1	1	Gasket(Generator)		
4	18011008	2	O-Ring D. 72X3		
5	16513002	1	Exhaust Elbow Gasket		
6	17421035	1	Gasket,Exhaust MANIFOld		
7	17121013	2	Gasket		
8	17421010	1	Rocker Cover Gasket		
9	17421011	1	Gasket		
10	17421032	1	Gasket IN.MANIFOld		
11	17421042	1	Gasket		
12	17822112	1	Gasket, Side Cover		
13	17421004	1	Gasket,Cylinder Head		
14	(*)	1	Not available [NP]		
15	17420112	2	Seal,Valve		
16	17424063	1	Gasket		
17	56000069	2	Washer 14-20-1,5		
18	17424062.1	1	Gasket,Side Cover		
19	17424008	8	Washer,SealING		
20	17421041	1	Gasket,Side Cover		
21	17421022	1	Gasket,Pump Cover		
22	34711003	1	Gasket Cover		
23	33311013	1	O-Ring D. 15X2		
24	13310013	1	Gasket,water pump		
25	17420047	2	O-Ring D. 140X2		
26	17420040	1	Gasket,Gear		
27	17420018	1	Gasket,Front Plate		
28	17424060	1	O-Ring D. 22X2,4		
29	17425028	1	Gasket		
30	13324011	1	Washer		
31	13824013	4	Injector Washer		
32	17424025G.1	4	Gasket Fuel Return (Genset)		
33	17422054	8	Seal,Valve Stem		
34	13320063	1	Seal Oil		

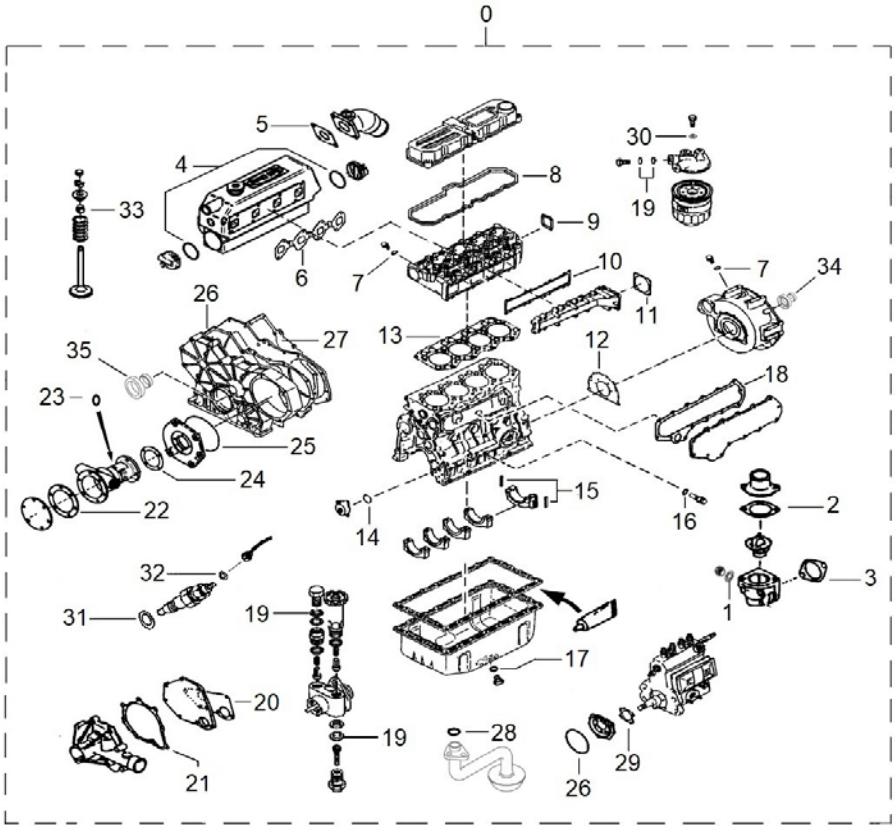

[NP] Not provided

Maintenance Kit

D_17420101			Gasket Kit		
FIG.	**REF.**	**QTY**	**DESCR.**	**FROM**	**UPTO**
35	17420039.1	1	Seal Assy,Oil		

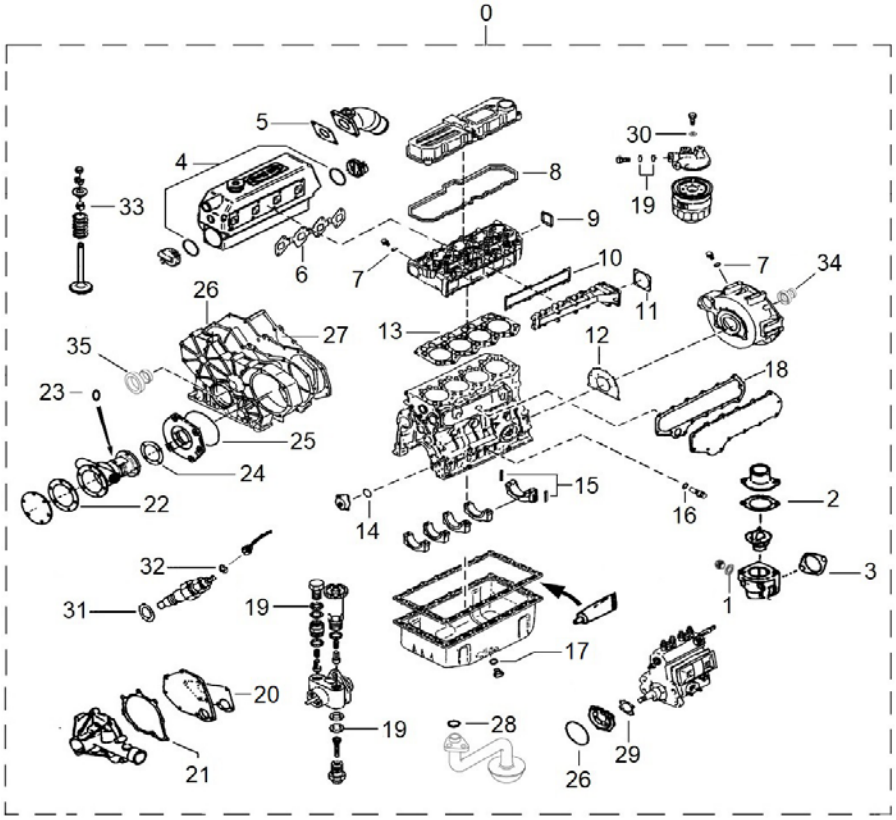

Maintenance Kit

17411100			Pipe Rubber Set,Water Line		
FIG.	REF.	QTY	DESCR.	FROM	UPTO
1	17411013	1	Elbow,Engine Water Exhaust		
2	16711016	1	Rubber Elbow	03/10/2014	
3	13211036	1	Pipe 30-40-100		
4	15211026	1	Elbow,rubber		
5	17411034	1	Hose		
NS	17411014	1	Pipe [NS]		
NS	16511020	2	Pipe 30-40-175 [NS]		
NS	17421025	1	Hose,BY-PASS [NS]		
NS	17411016	1	Hose SMI-R3 [NS]		
NS	17411018	1	Hose SMI-R3 [NS]		
NS	15312007	2	Water Cooler Cover [NS]		
NS	17410032	1	Ring [NS]		

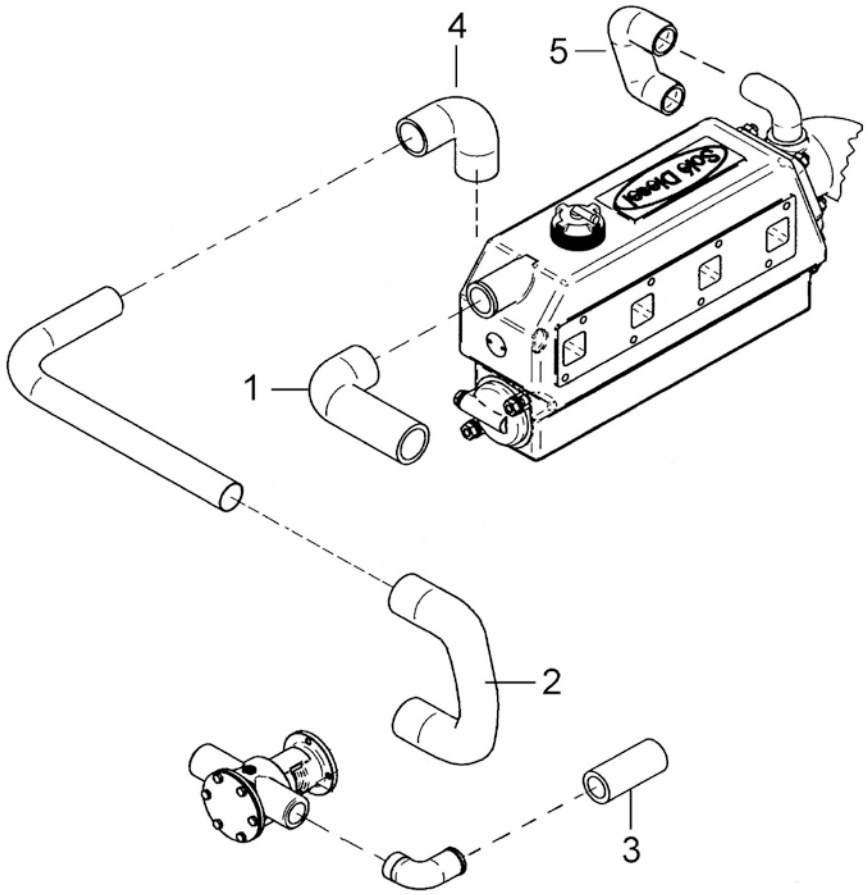

[NS] Not shown

Maintenance Kit

17420101.1			Gasket Kit		
FIG.	REF.	QTY	DESCR.	FROM	UPTO
1	17421004	1	Gasket,Cylinder Head		
2	17421010	1	Rocker Cover Gasket		
3	17421032	1	Gasket IN.MANIFOld		
4	17421035	1	Gasket,Exhaust MANIFOld		
5	17422054	8	Seal,Valve Stem		
6	17111021	1	Gasket		

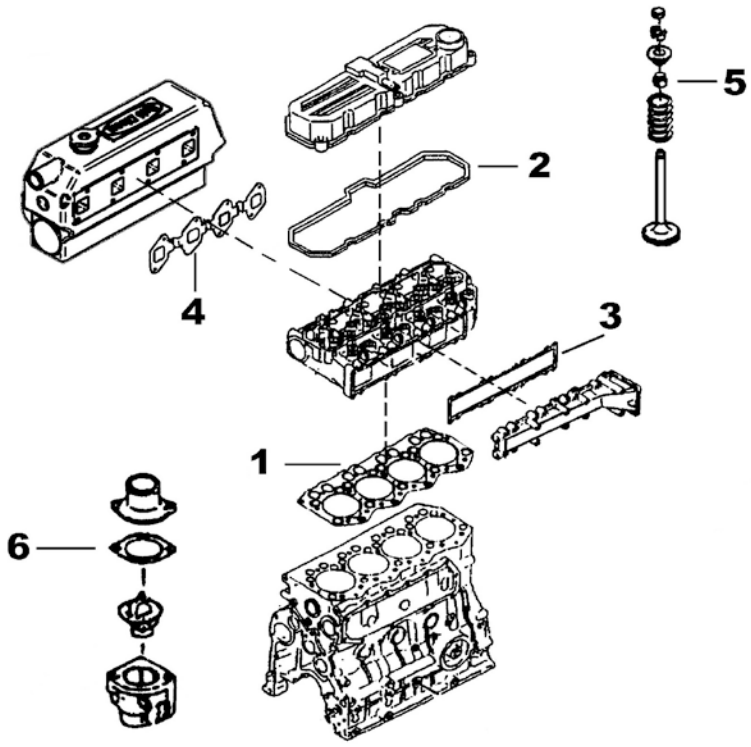

Maintenance Kit

36511000K			Repair Kit Water Pump 1"		
FIG.	REF.	QTY	DESCR.	FROM	UPTO
1	34711008	1	1" Impeller		
2	34711003	1	Gasket Cover		
3	36511020	1	Seal 16-30-7		
4	36511019	1	Seal		
5	33311013	1	O-Ring D. 15X2		
6	13310013	1	Gasket,water pump		

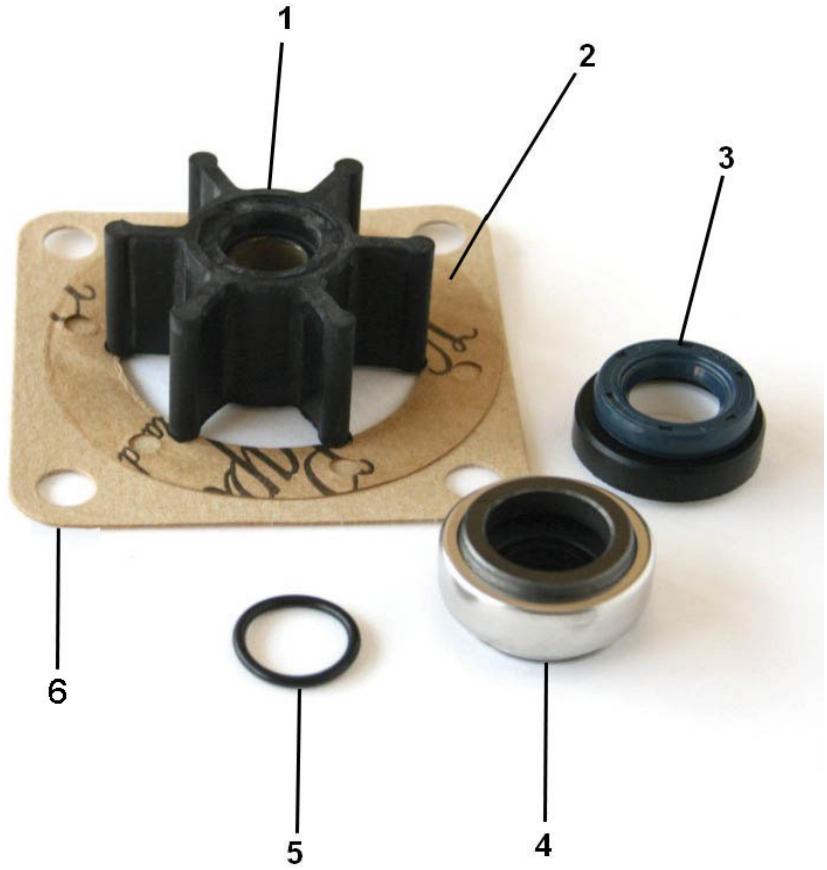

TM-345 Gearbox

D_5023_1			Sheet 1/4		
FIG.	REF.	QTY	DESCR.	FROM	UPTO
1	24850091	1	Screw		
2	24850092	3	Washer		
3	24850090	2	Washer		
4	24820068	3	Plug M8X1		
5	24820086	3	Washer 8-13-1,5 [NP]		
6	24810065	1	Plug		
7	24850008	1	Gauge Oil LEVEL		
26	24850028	11	Screw		
41	24810044	5	Bolt DIN 933 M6-16 8.8 [NP]		
56	24850005	1	Plate, IDENTIFICATION		
59	24810063	1	Plane Washer		
60	24850011	1	Plug,oil drain		
61	24850040	2	Bolt DIN 933 M6-25 8.8 [NP]		
62	24810047	1	Bolt DIN 933 M8-25 8.8 [NP]		
77	24810532	1	SWITCHER		
78	24810533	1	O-Ring D. 14X1,7		
79	24850527	1	Pin		

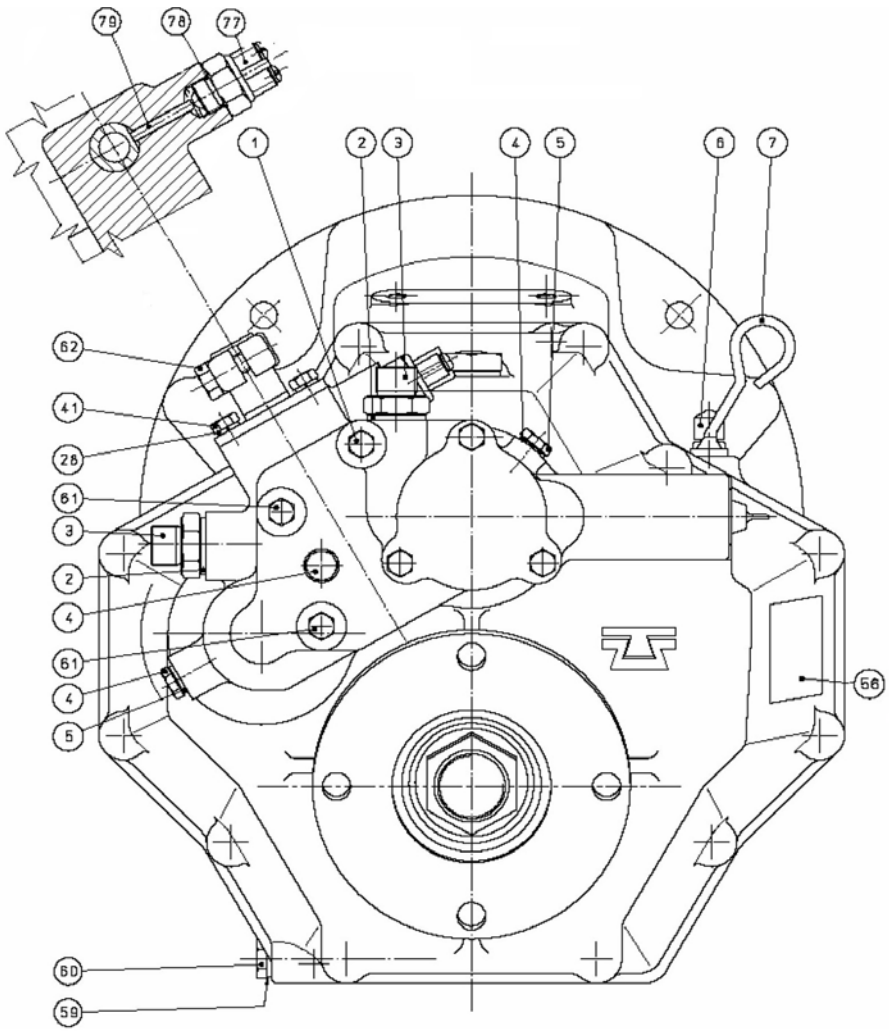

[NP] Not provided

TM-345 Gearbox

	D_5023_2		Sheet 2/4		
FIG.	**REF.**	**QTY**	**DESCR.**	**FROM**	**UPTO**
33	24830113	1	Screw		

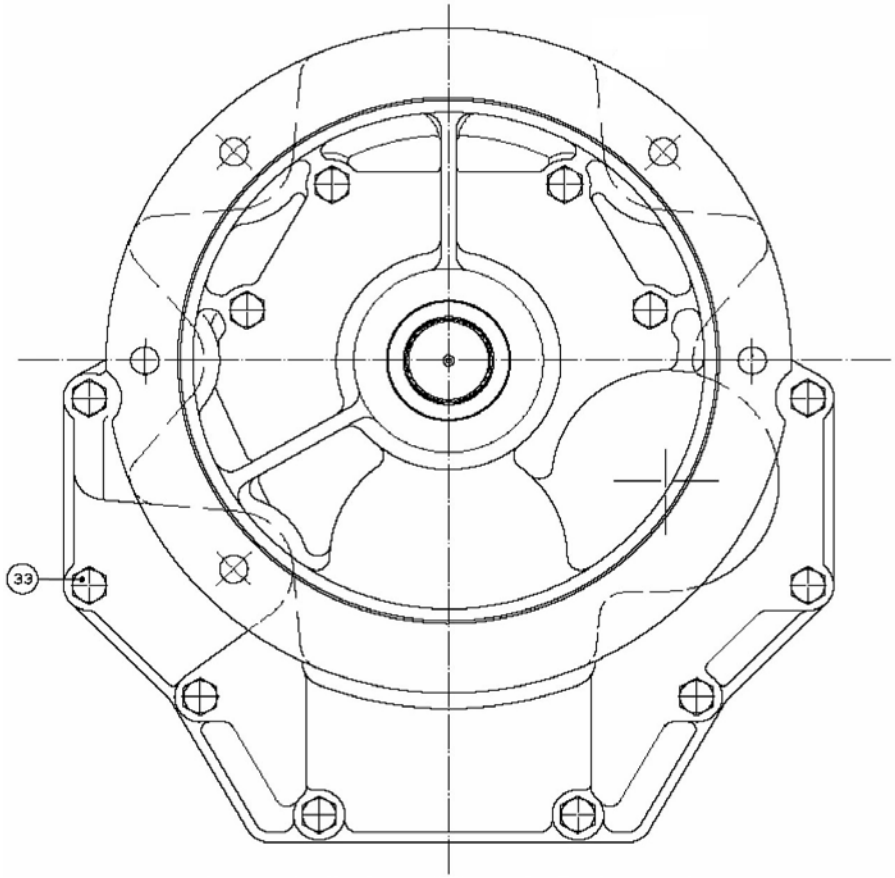

TM-345 Gearbox

	D_5023_3		Sheet 3/4		
FIG.	**REF.**	**QTY**	**DESCR.**	**FROM**	**UPTO**
8	24850323	2	Washer		
9-10	24850403	2	Clutch Plate Kit		
11	24850310	2	Ring		
12	24850307	2	Ring		
13	24850333	2	Spacer		
14	24850312	2	SEGER		
15A	24852203	1	Gear R. 1,54 TM 345		
15B	24853203	1	Gear R. 2 TM 345		
15C	24854203	1	Gear R. 2,47 TM 345		
16	24850012	1	Plug		
17	24850318	4	Ring		
18	24850306	4	Bearing, needle		
19	24850325	2	Washer		
20	24850308	2	Conical Roller Bearing 32305		
21	24850328	4	Washer		
22	24810326	2	Plug		
23	24850016	1	Bushing		
24	24850020	1	PUMB Box		
25	24850015	1	Pump Cover		
27	24850029	3	Screw		
28	24810042	9	Washer GROWER DIN 127-6 [NP]		
29	24850095	1	Gear, Pump Out		
30	24850094	1	Pump Shaft		
31	24850096	1	Gear, Pump INNER		
32	24850097	1	O-Ring D. 50X1,7		
34	24850099	1	Nut		
35	24850224A	1	Flange, Output TM-345A		
36	24840103	1	Grommet		
37	24850212	1	Conical Roller Bearing 30207A		
38	24850001A	1	Front Body TM-345A		
39A	24852210	1	Gear R. 1,54 TM 345		
39B	24853210	1	Gear R. 2 TM 345		
39C	24854210	1	Gear R. 2,47 TM 345		
40	24850013	2	Pin		
42	24850080	1	Plate Pipe		

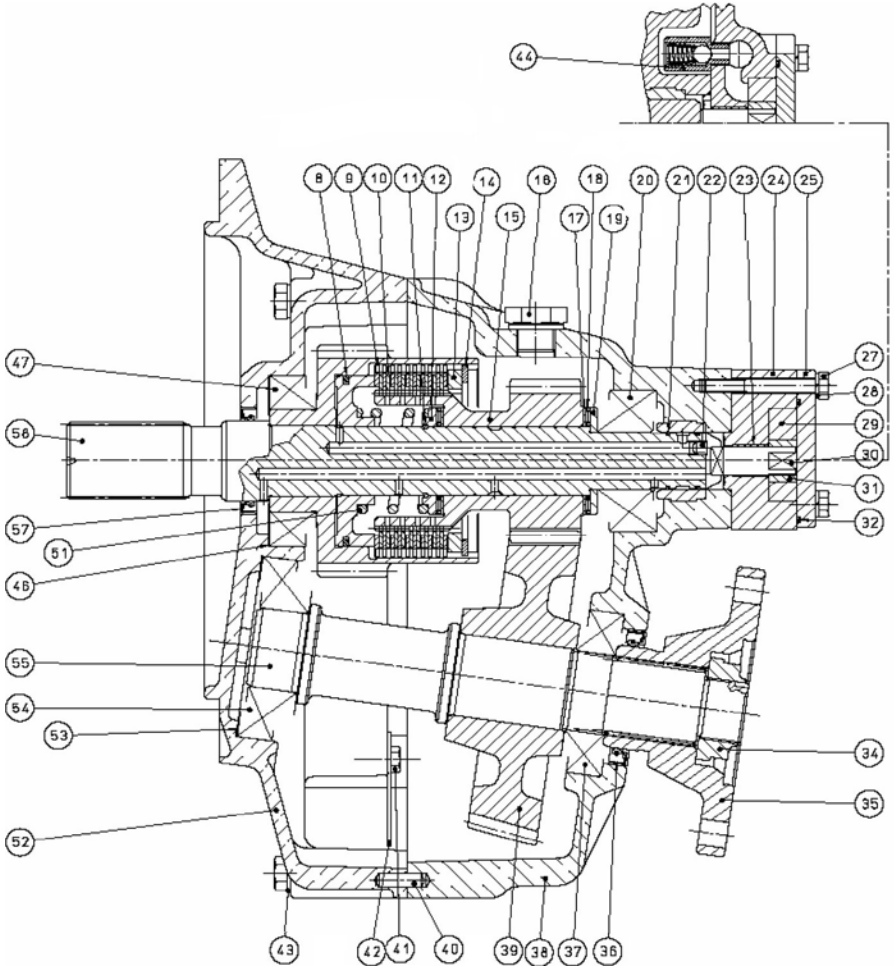

[NP] Not provided

TM-345 Gearbox

	D_5023_3		Sheet 3/4		
FIG.	**REF.**	**QTY**	**DESCR.**	**FROM**	**UPTO**
43	24850093	12	Washer		
44	24850063	1	By pass Valve		
46	24850108	6	Shim Adjusting		
47	24850104	2	Conical Roller Bearing 32009-X		
51	24850122	2	Spring		
52	24850207A	1	Cover TM-345A		
53	24810333	3	Spacer		
54	24850206	1	Conical Roller Bearing 31307A		
55	24850201	1	Output Shaft		
57	24810103S	1	Grommet, Oil SILICON		
58	24850101	1	Input Shaft		

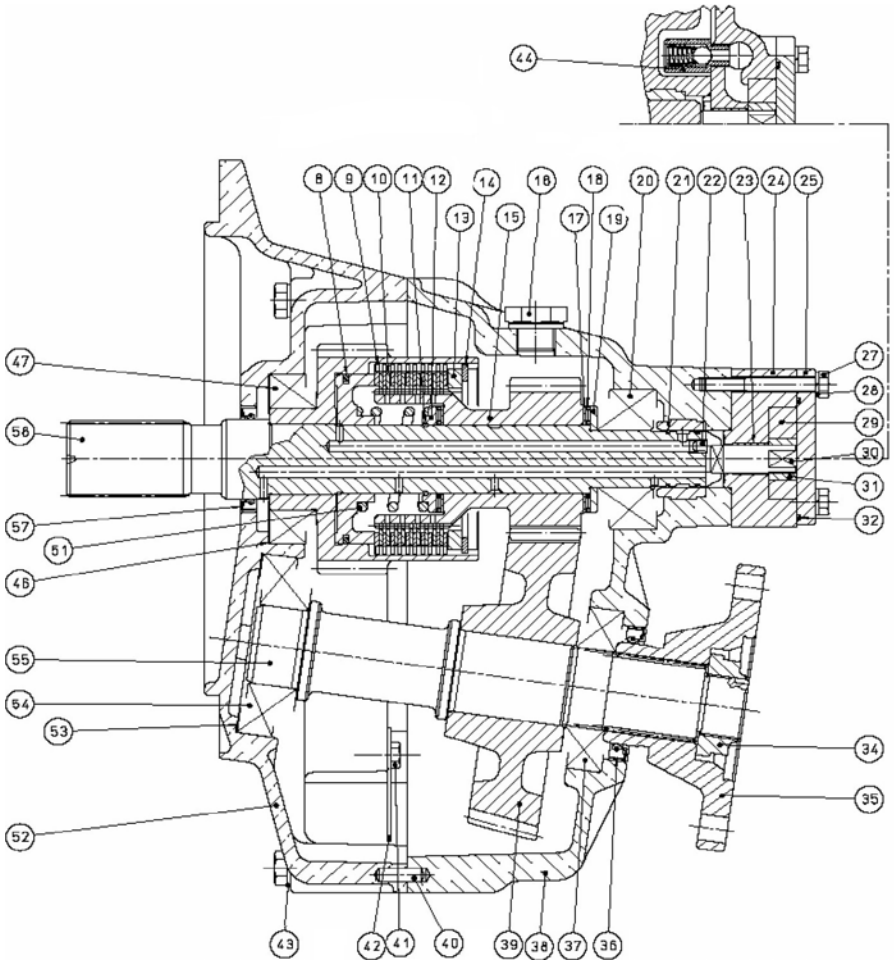

TM-345 Gearbox

	D_5023_4		Sheet 4/4		
FIG.	**REF.**	**QTY**	**DESCR.**	**FROM**	**UPTO**
45A	24852203	1	Gear R. 1,54 TM 345		
45B	24853203	1	Gear R. 2 TM 345		
45C	24854203	1	Gear R. 2,47 TM 345		
48	24850124	2	Piston		
49	24850301	1	INTERMEDIATE Shaft		
50	24850330	1	Bell		
63	24810056	2	O-Ring D. 15,08X2,62 [NP]		
64	24850081	1	Aspiration Tube		
65	24810035	1	Oil Filter		
66	24850085	1	Pin		
67	24850059	1	O-Ring D. 50X5,3		
68	24850076	1	Spacer		
69	24850057	1	Nut		
70	24850030	1	Spring		
71	24810424	1	Lever		
72	24810041	1	Support		
73	24850062	1	Selector Valve		
74	24850052	1	Valve		
75	24850078	1	Spring		
76	24850079	1	Screw		

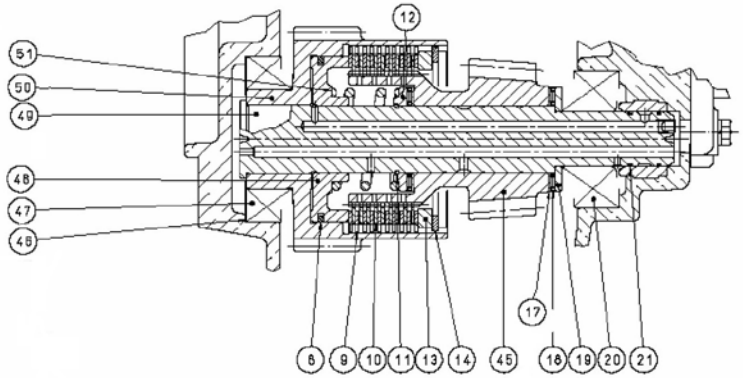

INTERMEDIATE SHAFT ASSEMBLY

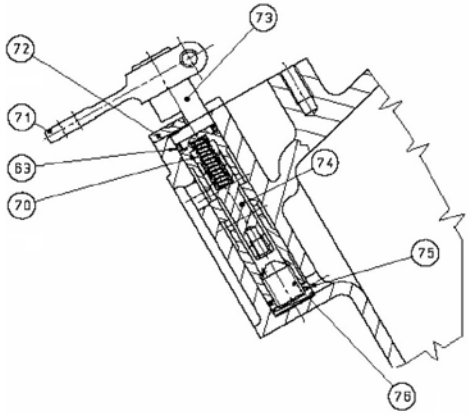

SELECTOR VALVE ASSEMBLY

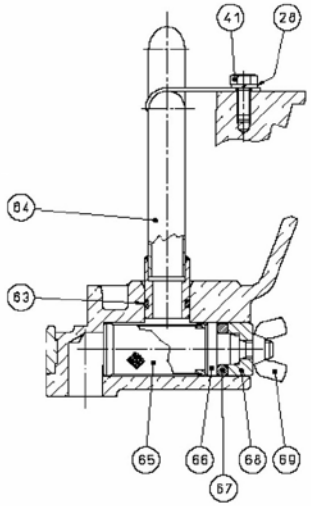

OIL FILTER ASSEMBLY

[NP] Not provided

TM-345 Gearbox

	D_5023_5		Maintenance Kit		
FIG.	**REF.**	**QTY**	**DESCR.**	**FROM**	**UPTO**
1	24850401	1	Kit Gasket		
2	A0105000	1	15W40 Sole Diesel Oil 5L		
3	24850403	2	Clutch Plate Kit		

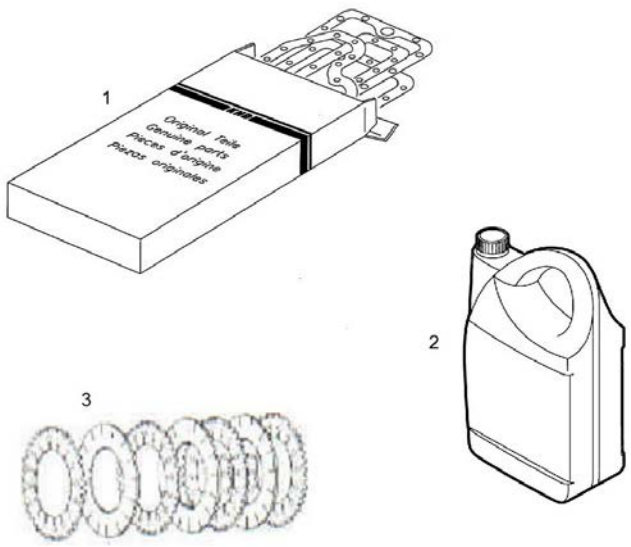

TM-345A Gearbox

D_5024_1			Sheet 1/4		
FIG.	REF.	QTY	DESCR.	FROM	UPTO
1	24850091	1	Screw		
2	24850092	3	Washer		
3	24850090	2	Washer		
4	24820068	3	Plug M8X1		
5	24820086	3	Washer 8-13-1,5 [NP]		
6	24810065	1	Plug		
7	24850008	1	Gauge Oil LEVEL		
26	24850028	11	Screw		
41	24810044	5	Bolt DIN 933 M6-16 8.8 [NP]		
56	24850005	1	Plate, IDENTIFICATION		
59	24810063	1	Plane Washer		
60	24850011	1	Plug,oil drain		
61	24850040	2	Bolt DIN 933 M6-25 8.8 [NP]		
62	24810047	1	Bolt DIN 933 M8-25 8.8 [NP]		
77	24810532	1	SWITCHER		
78	24810533	1	O-Ring D. 14X1,7		
79	24850527	1	Pin		

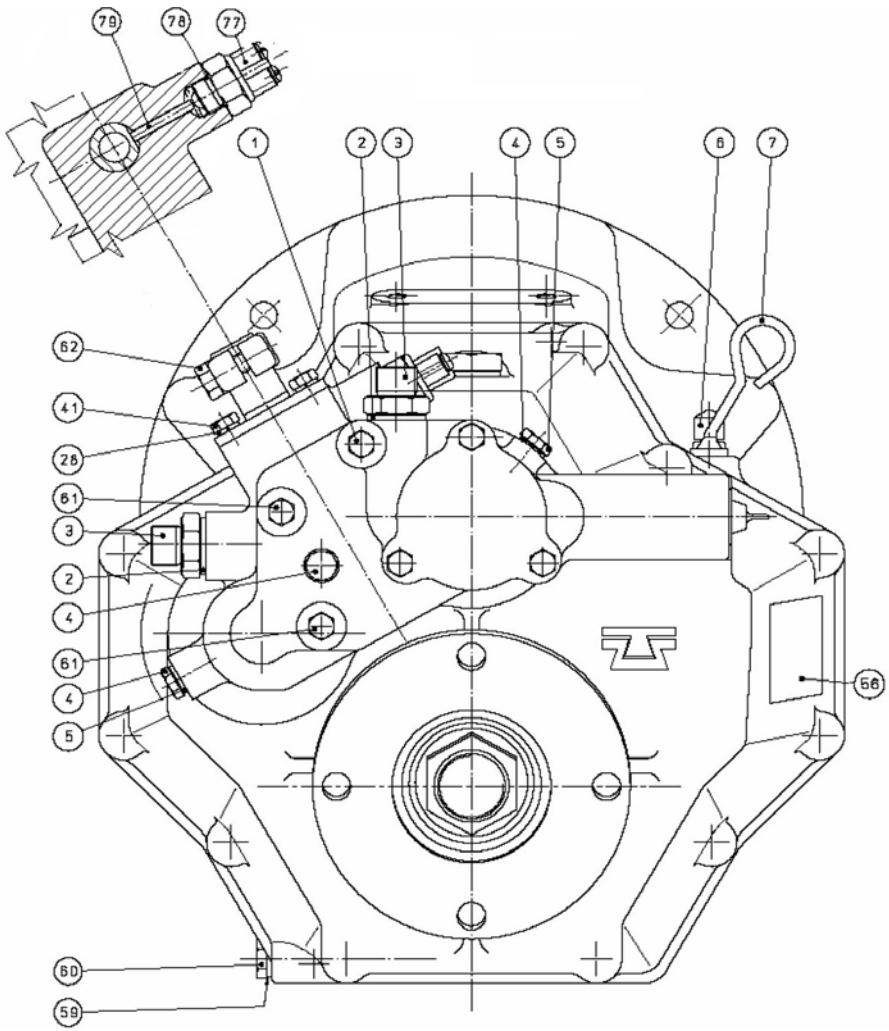

[NP] Not provided

TM-345A Gearbox

	D_5024_2		Sheet 2/4		
FIG.	**REF.**	**QTY**	**DESCR.**	**FROM**	**UPTO**
33	24830113	1	Screw		

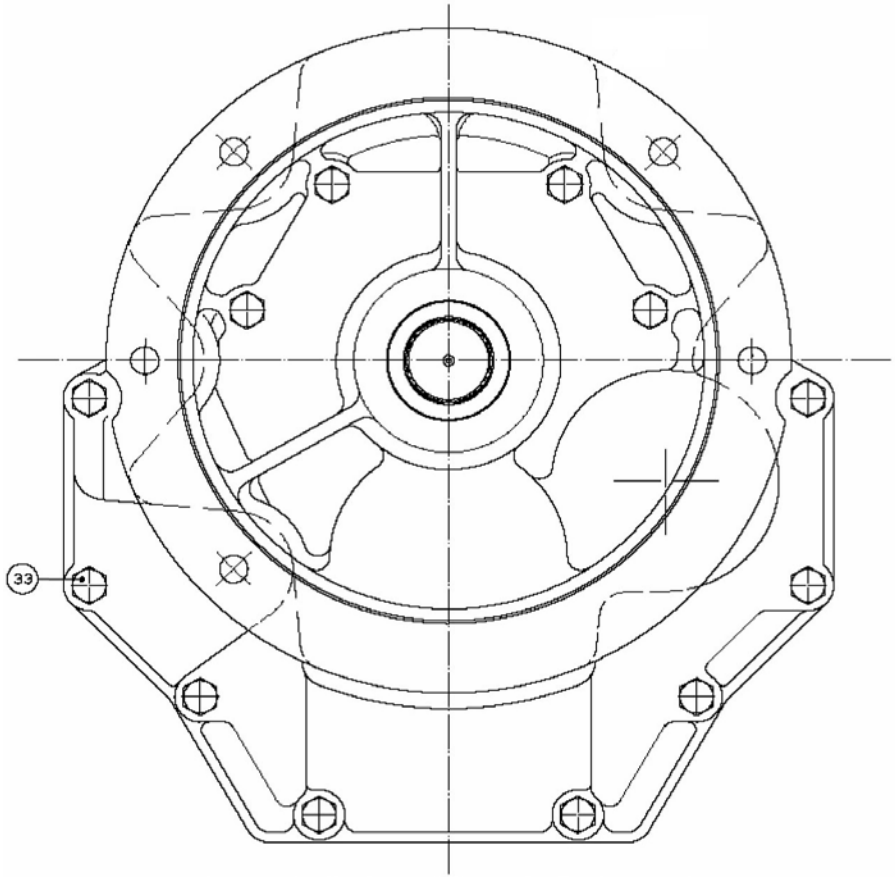

TM-345A Gearbox

	D_5024_3		Sheet 3/4		
FIG.	**REF.**	**QTY**	**DESCR.**	**FROM**	**UPTO**
8	24850323	2	Washer		
11	24850310	2	Ring		
12	24850307	2	Ring		
13	24850333	2	Spacer		
14	24850312	2	SEGER		
15A	24852203A	1	Gear R. 1,54 TM 345A		
15B	24853203A	1	Gear Red. 2 TM 345A		
15C	24854203A	1	Gear R. 2,47 TM 345A		
16	24850012	1	Plug		
17	24850318	4	Ring		
18	24850306	4	Bearing, needle		
19	24850325	2	Washer		
20	24850308	2	Conical Roller Bearing 32305		
21	24850328	4	Washer		
22	24810326	2	Plug		
23	24850016	1	Bushing		
24	24850020	1	PUMB Box		
25	24850015	1	Pump Cover		
27	24850029	3	Screw		
28	24810042	9	Washer GROWER DIN 127-6 [NP]		
29	24850095	1	Gear, Pump Out		
30	24850094	1	Pump Shaft		
31	24850096	1	Gear, Pump INNER		
32	24850097	1	O-Ring D. 50X1,7		
34	24850099	1	Nut		
35	24850224A	1	Flange, Output TM-345A		
36	24840103	1	Grommet		
37	24850212	1	Conical Roller Bearing 30207A		
38	24850001A	1	Front Body TM-345A		
39A	24852210A	1	Gear R. 1,54 TM 345A		
39B	24853210A	1	Gear R. 2 TM 345A		
39C	24854210A	1	Gear R. 2,47 TM 345A		
40	24850013	2	Pin		
42	24850080	1	Plate Pipe		
43	24850093	12	Washer		

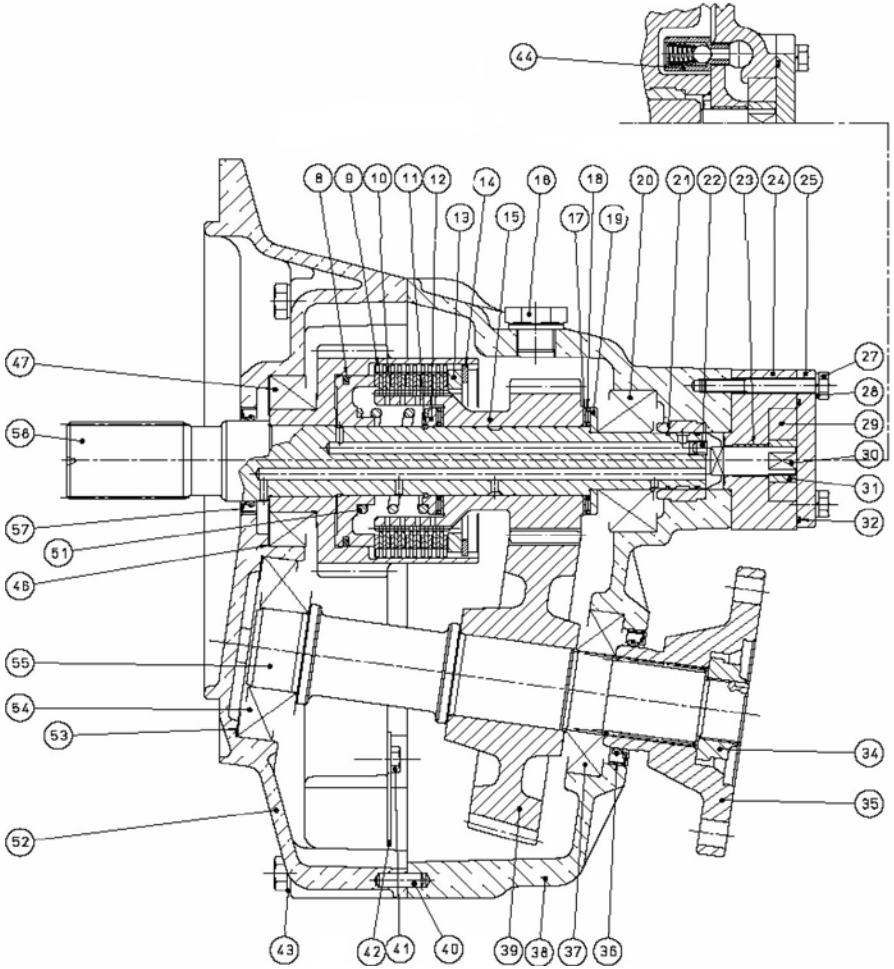

[NP] Not provided

TM-345A Gearbox

	D_5024_3		Sheet 3/4		
FIG.	**REF.**	**QTY**	**DESCR.**	**FROM**	**UPTO**
44	24850063	1	By pass Valve		
46	24850108	6	Shim Adjusting		
47	24850104	2	Conical Roller Bearing 32009-X		
51	24850122	2	Spring		
52	24850207A	1	Cover TM-345A		
53	24810333	3	Spacer		
54	24850206	1	Conical Roller Bearing 31307A		
55	24850201	1	Output Shaft		
57	24810103S	1	Grommet, Oil SILICON		
58	24850101	1	Input Shaft		

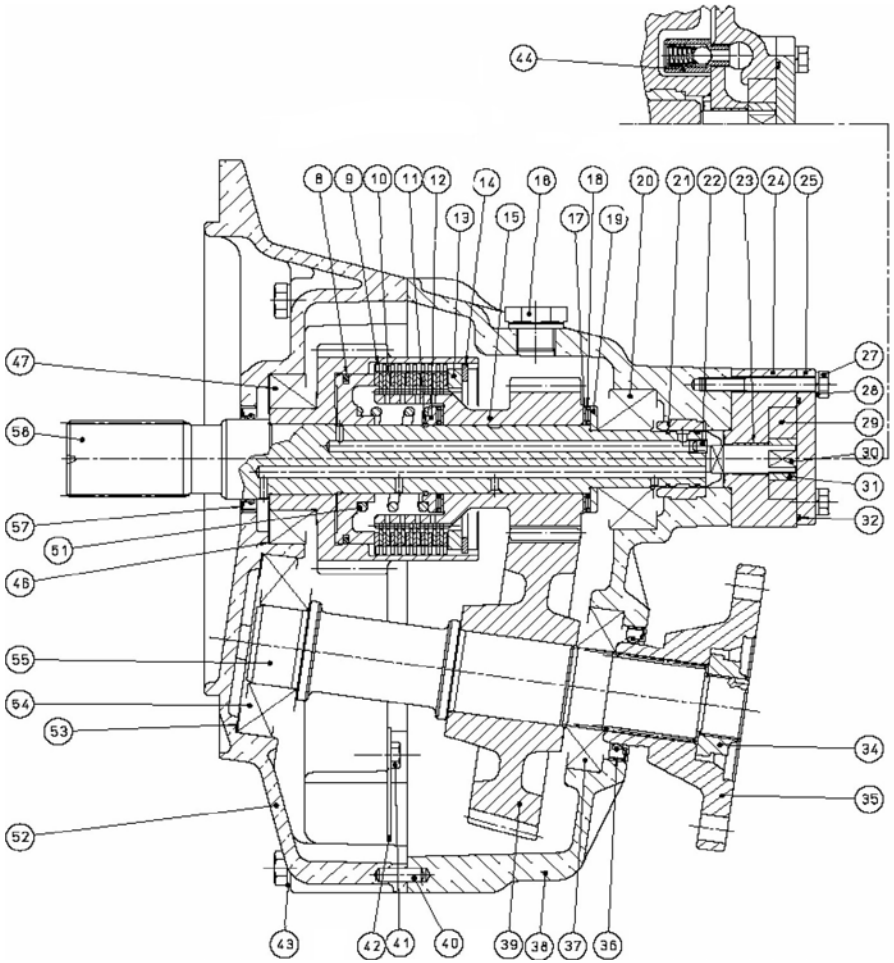

TM-345A Gearbox

	D_5024_4		Sheet 4/4		
FIG.	**REF.**	**QTY**	**DESCR.**	**FROM**	**UPTO**
45A	24852302	1	Gear R. 1,54 TM 345A		
45B	24853302	1	Gear R. 2 TM 345A		
45C	24854302	1	Gear R. 2,47 TM 345A		
48	24850124	2	Piston		
49	24850301	1	INTERMEDIATE Shaft		
50	24850330	1	Bell		
63	24810056	2	O-Ring D. 15,08X2,62 [NP]		
64	24850081	1	Aspiration Tube		
65	24810035	1	Oil Filter		
66	24850085	1	Pin		
67	24850059	1	O-Ring D. 50X5,3		
68	24850076	1	Spacer		
69	24850057	1	Nut		
70	24850030	1	Spring		
71	24810424	1	Lever		
72	24810041	1	Support		
73	24850062	1	Selector Valve		
74	24850052	1	Valve		
75	24850078	1	Spring		
76	24850079	1	Screw		

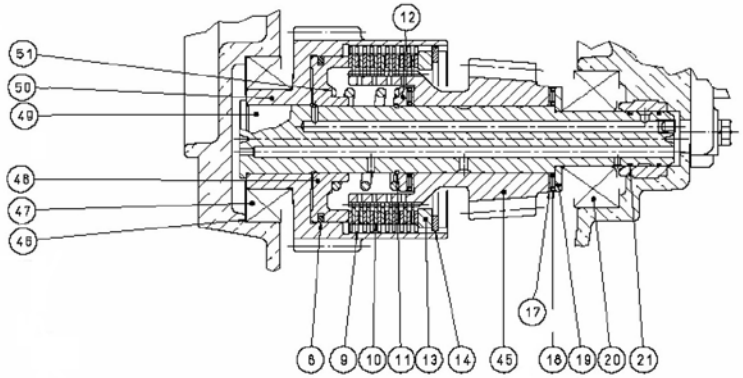

INTERMEDIATE SHAFT ASSEMBLY

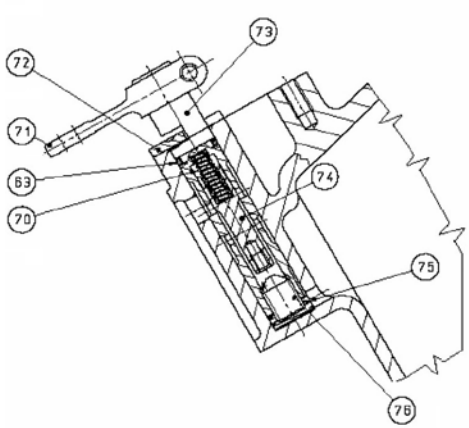

SELECTOR VALVE ASSEMBLY

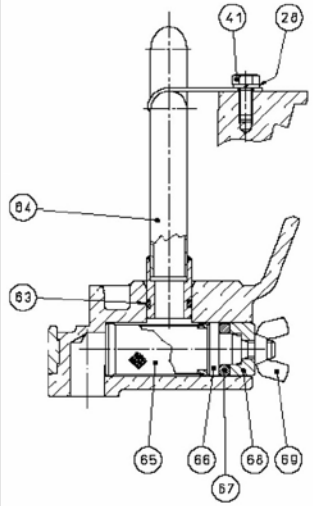

OIL FILTER ASSEMBLY

[NP] Not provided

TM-345A Gearbox

	D_5023_5		Maintenance Kit		
FIG.	**REF.**	**QTY**	**DESCR.**	**FROM**	**UPTO**
1	24850401	1	Kit Gasket		
2	A0105000	1	15W40 Sole Diesel Oil 5L		
3	24850403	2	Clutch Plate Kit		

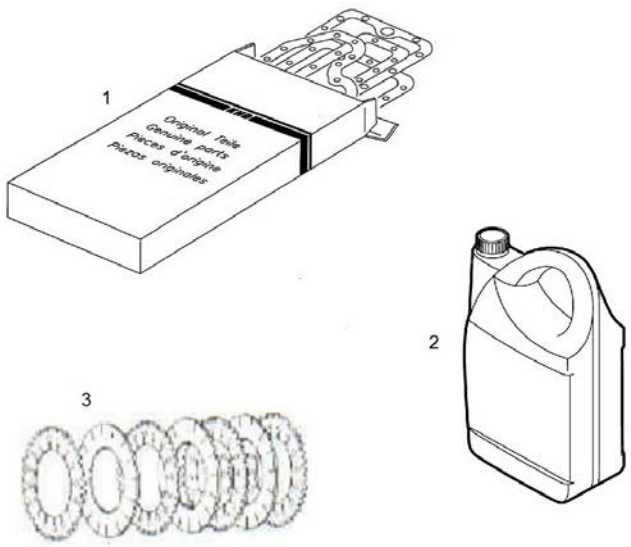

Gearbox TM-880A

D_5026_1.1			Sheet 1.1/4		
FIG.	REF.	QTY	DESCR.	FROM	UPTO
1	24820090	2	Pin		
2	24816080	1	Plate Pipe		
3	24810082	2	Bolt DIN 933 M8-10 8.8 [NP]		
4	24816001	1	Front Body TM 880A		
5	24810047	6	Bolt DIN 933 M8-25 8.8 [NP]		
6	24810014	6	Washer GROWER DIN 127-8 [NP]		
7	24820072	1	Cover Input Shaft		
8	24820103	1	Oil Grommet		
9	24810065	1	Plug		
10	24820005.1	1	NAME Plate		
11	24810071	2	Stud		
12	56000083	1	Washer 21-26-1,5		
13	24810012	1	Nut		
14	24810063	1	Plane Washer		
15	24810068	1	Plug		
16	24810008	1	ROD, Oil LEVEL		
17	24820071	2	Stud		
18	24816002	1	REVERSE Body TM 880A		
19	24810059	1	Plane Washer		
20	24810060	1	Racord		
21	24810062	1	Valve BY PASS [NP]		
22	24820086	1	Washer 8-13-1,5 [NP]		
23	24830105	1	Plug		
24	24820102	1	Cover, REAR		

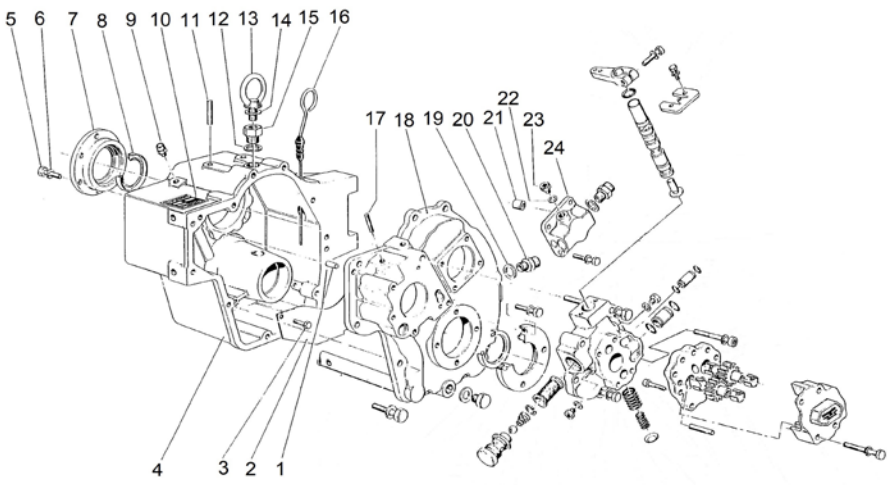

[NP] Not provided

Gearbox TM-880A

D_5026_1.2			Sheet 1.2/4		
FIG.	REF.	QTY	DESCR.	FROM	UPTO
25	24810013	4	Bolt DIN 931 M8-65 8.8 [NP]		
26	24820015.1	1	Oil Pump Body		
27	24820025.1	3	Bolt DIN 912 M6-25 8.8 [NP]		
28	24810025	4	Bushing		
29	24810096	1	Gear, Conduct		
30	24820023.1	2	Pin		
31	24820026	1	Distributor Cap		
32	24810055	1	Expansion Plug		
33	24816054	1	Spring, Valve		
34	24820098	2	Bolt DIN 912 M10-50 8.8 [NP]		
35	24810035	1	Oil Filter		
36	24810032	1	SNAP Ring		
37	24810030	1	Valve Spring		
38	18024143	1	Ball,steel 1/2"		
39	24810027	1	Washer		
40	24810024	1	Plug, Oil Filter DRAIN		
41	24820208	1	Cover Front		
42	24820214	1	Grommet		
43	24810011	1	Plug,oil drain		
44	24810088	1	Washer 14-20-1,5 [NP]		
45	52101314	1	Bolt DIN 931 M10-55 8.8		
46	24816081	1	Aspiration Tube TM 880A		
NS	24820013	2	Bolt DIN 912 M10-30 8.8 [NP] [NS]		
NS	24810026.1	3	Cover [NS]		
NS	24820090	2	Pin [NS]		
NS	52103311	9	Bolt DIN 912 M10-40 8.8 [NS]		

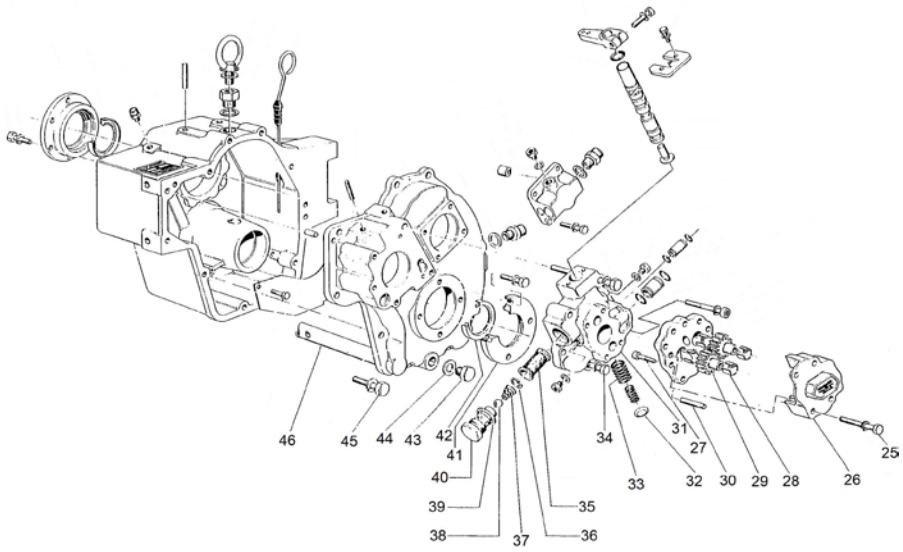

[NP] Not provided
[NS] Not shown

Gearbox TM-880A

D_5026_1.3			Sheet 1.3/4		
FIG.	REF.	QTY	DESCR.	FROM	UPTO
47	24820062	2	Tube, Racord		
48	24820063	2	O-Ring D. 15X1,7		
49	24820013	2	Bolt DIN 912 M10-30 8.8 [NP]		
50	24810026.1	3	Cover		
51	24810095	3	Gear, ConductOR		
52	24810056	1	O-Ring D. 15,08X2,62 [NP]		
54	24810044	2	Bolt DIN 933 M6-16 8.8 [NP]		
55	24810042	2	Washer GROWER DIN 127-6 [NP]		
56	24810041	1	Support		
57	24810051	1	Distributor		
58	24810052	1	Valve		
59	24820075	4	Washer GROWER DIN 127-10 [NP]		
60	24820076	4	Bolt DIN 933 M10-30 8.8 [NP]		
61	24820087	1	Bolt DIN 931 M10-130 8.8 [NP]		
62	24820060	1	Tube, Racord		
63	24820059	2	O-Ring D. 10X1,7		
82	24810424	1	Lever		
NS	56000083	1	Washer 21-26-1,5 [NS]		
NS	24820102	1	Cover, REAR [NS]		
NS	24830105	1	Plug [NS]		
NS	24820103	1	Oil Grommet [NS]		

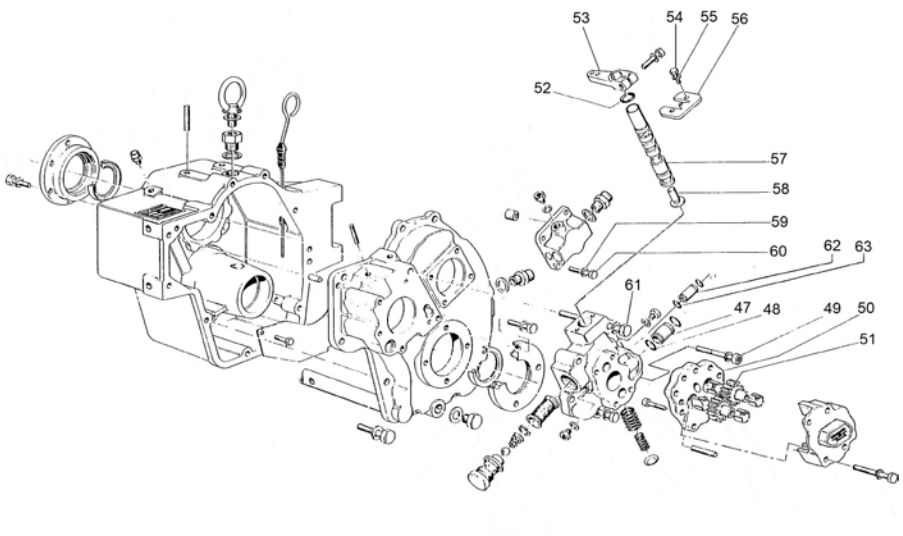

[NP] Not provided
[NS] Not shown

Gearbox TM-880A

D_5026_2			Input Shaft 2/4		
FIG.	REF.	QTY	DESCR.	FROM	UPTO
1	24820134	1	Conical Roller Bearing 32011-JR		
2	24810326	1	Plug		
3	24820130	1	Bell		
4	24820125	1	Washer		
5	24820124	1	Piston		
6	24820115	9	Disk		
7	24820116	8	Disk		
8	24810211	1	KEY		
9	24820126	1	Washer		
10	24820101	1	Input Shaft		
11	24810328	2	Washer		
117	24810333	0	Spacer [VAR]		
12	24810326	1	Plug		
13	24820122	1	Spring		
14	24820123	1	Bearing		
15	24820113	1	Grommet		
16	24820129	1	Ring		
17	24820128	1	SNAP Ring		
18A	24822302	1	Gear R. 1,50 TM 170		
18B	24823302	1	Gear R. 2,04 TM 170		
18C	24824302	1	Gear R. 2.50 TM 170		
19	24820117	1	Bushing		
20	24820118	1	Ring		
21	24820121	1	Roller Bearing AXK-4060		
22	24820105	1	Washer		
23	24820104	1	Conical Roller Bearing 32307		

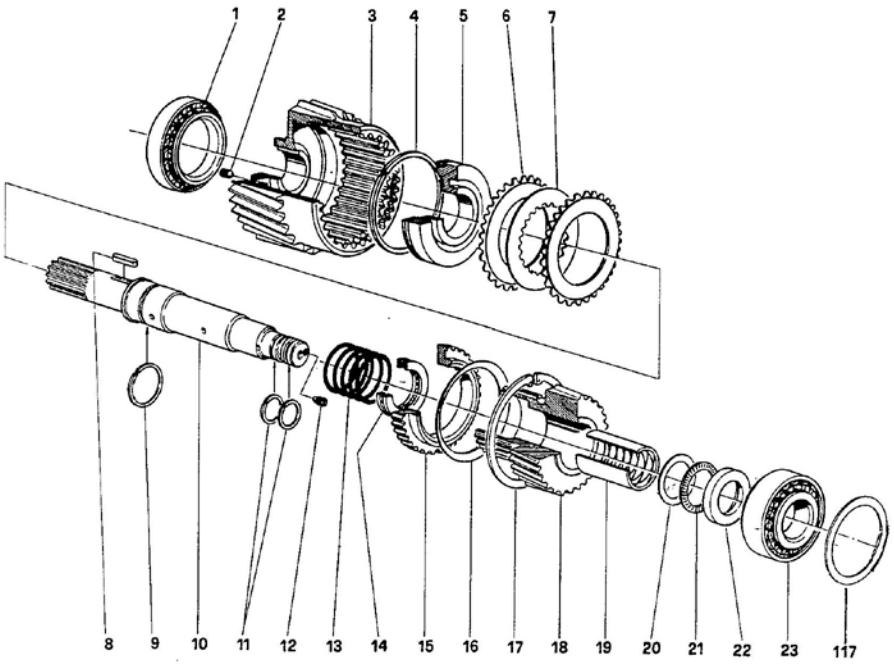

[VAR] Variable according to repair

Gearbox TM-880A

D_5026_3			Intermediate Shaft 3/4		
FIG.	REF.	QTY	DESCR.	FROM	UPTO
117	24810333	0	Spacer [VAR]		
24	24820134	1	Conical Roller Bearing 32011-JR		
25	24810326	1	Plug		
26	24820330	1	Bell		
27	24820125	1	Washer		
28	24820124	1	Piston		
29	24820115	9	Disk		
30	24820116	8	Disk		
31	24810211	1	KEY		
32	24820126	1	Washer		
33	24820301	1	INTERMEDIATE Shaft		
34	24820126	1	Washer		
35	24810326	1	Plug		
36	24820122	1	Spring		
37	24820123	1	Bearing		
38	24820113	1	Grommet		
39	24820129	1	Ring		
40	24820128	1	SNAP Ring		
41A	24822302A	1	Gear R. 1,53 TM 170A		
41B	24823302A	1	Gear R. 2,08 TM 170A		
41C	24824302A	1	Gear R. 2,60 TM 170A		
42	24820117	1	Bushing		
43	24820118	1	Ring		
44	24820121	1	Roller Bearing AXK-4060		
45	24820105	1	Washer		
46	24820104	1	Conical Roller Bearing 32307		

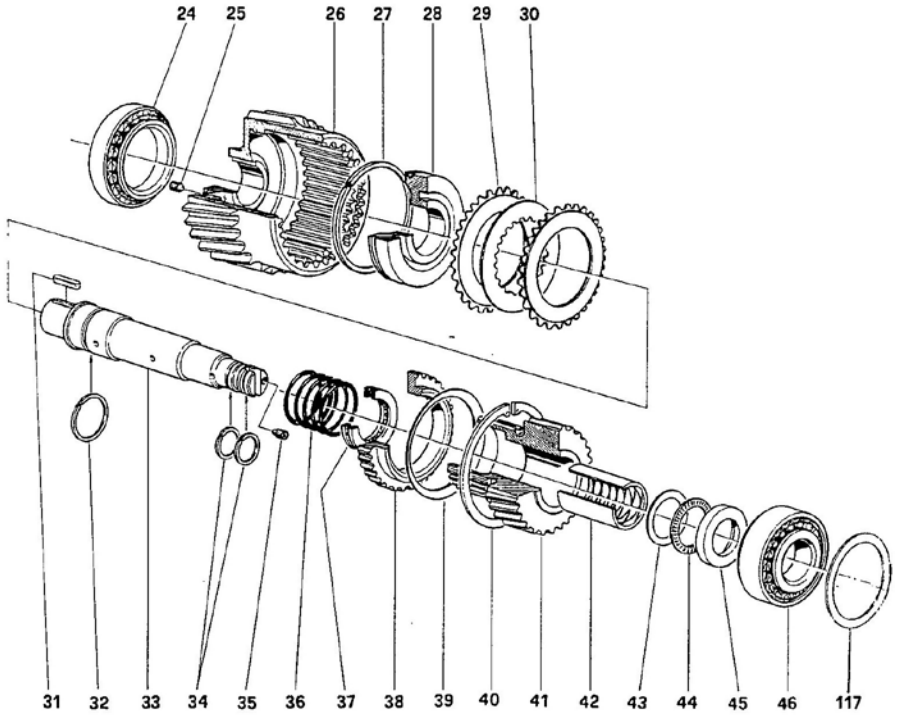

[VAR] Variable according to repair

Gearbox TM-880A

D_5026_4			Output Shaft 4/4		
FIG.	REF.	QTY	DESCR.	FROM	UPTO
140	24820333.1	0	Shim [VAR]		
47	24820206	1	Conical Roller Bearing 33210		
48/51	24823201AC	1	Gear+Output Shaft Kit+Spacer		
48/51	24822201AC	1	Gear+Output Shaft Kit+Spacer		
48/51	24824201AC	1	Gear+Output Shaft Kit+Spacer		
52	24820212	1	Conical Roller Bearing 30210-J2/Q		
53	24820224	1	Flange, Output		
54	24820225	1	O-Ring D. 45X3,5		
55	24820219	1	BUTT Washer		
56	24820220	1	Pin		
57	24820221	1	1 [NP]		
58	24820222.1	1	Screw		

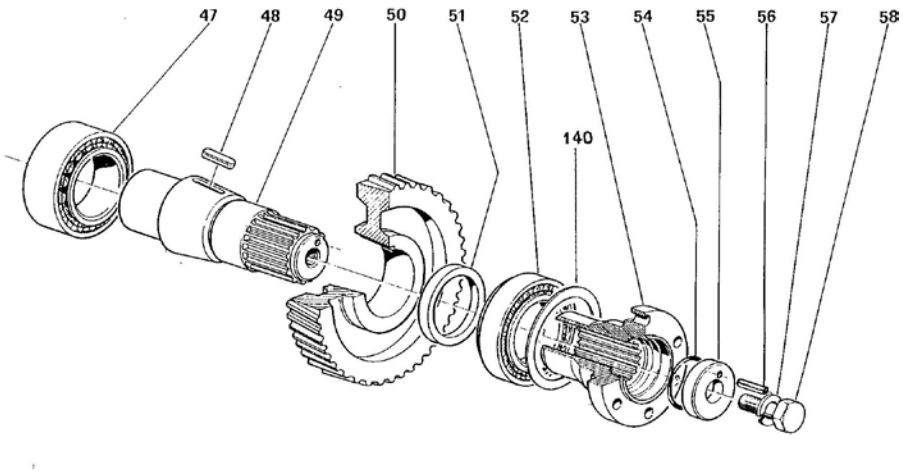

[NP] Not provided

[VAR] Variable according to repair

Gearbox TM-880A

	D_5027_5		Maintenance Kit		
FIG.	**REF.**	**QTY**	**DESCR.**	**FROM**	**UPTO**
1	24820401	1	Kit Gasket		
2	A0105000	1	15W40 Sole Diesel Oil 5L		
3	24820403	2	Clutch Plate Kit		

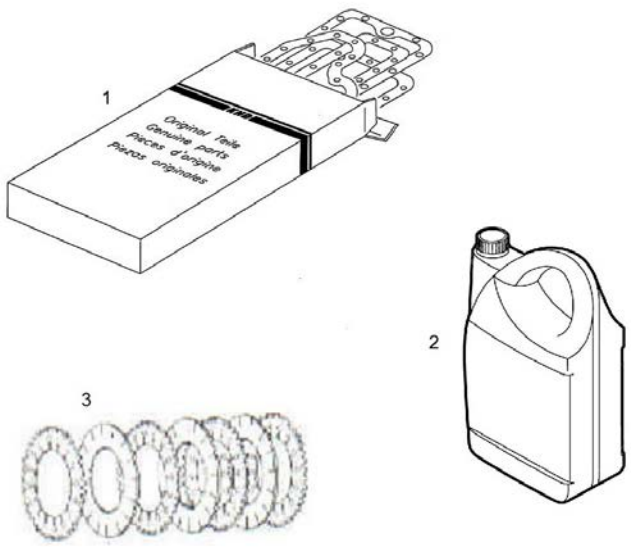

Gearbox TM-170

D_5027_1.1			Sheet 1.1/4		
FIG.	REF.	QTY	DESCR.	FROM	UPTO
1	24820090	2	Pin		
2	24816080	1	Plate Pipe		
3	24810082	2	Bolt DIN 933 M8-10 8.8 [NP]		
4	24820001	1	Front Body TM 170		
5	24810047	6	Bolt DIN 933 M8-25 8.8 [NP]		
6	24810014	6	Washer GROWER DIN 127-8 [NP]		
7	24820072	1	Cover Input Shaft		
8	24820103	1	Oil Grommet		
9	24810065	1	Plug		
10	24820005.1	1	NAME Plate		
11	24810071	2	Stud		
12	56000083	1	Washer 21-26-1,5		
13	24810012	1	Nut		
14	24810063	1	Plane Washer		
15	24810068	1	Plug		
16	24810008	1	ROD, Oil LEVEL		
17	24820071	2	Stud		
18	24820002	1	Reverse Body TM 170		
19	24810059	1	Plane Washer		
20	24810060	1	Racord		
21	24810062	1	Valve BY PASS [NP]		
22	24820086	1	Washer 8-13-1,5 [NP]		
23	24830105	1	Plug		
24	24820102	1	Cover, REAR		

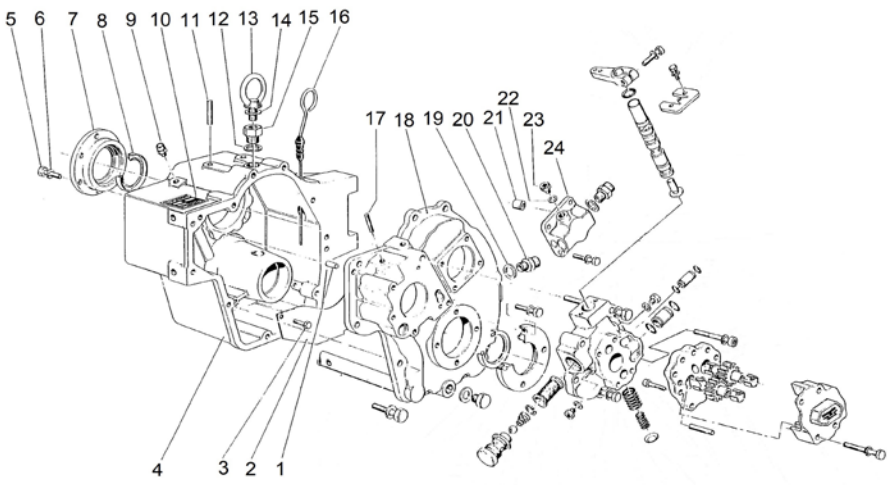

[NP] Not provided

Gearbox TM-170

D_5026_1.2			Sheet 1.2/4		
FIG.	REF.	QTY	DESCR.	FROM	UPTO
25	24810013	4	Bolt DIN 931 M8-65 8.8 [NP]		
26	24820015.1	1	Oil Pump Body		
27	24820025.1	3	Bolt DIN 912 M6-25 8.8 [NP]		
28	24810025	4	Bushing		
29	24810096	1	Gear, Conduct		
30	24820023.1	2	Pin		
31	24820026	1	Distributor Cap		
32	24810055	1	Expansion Plug		
33	24816054	1	Spring, Valve		
34	24820098	2	Bolt DIN 912 M10-50 8.8 [NP]		
35	24810035	1	Oil Filter		
36	24810032	1	SNAP Ring		
37	24810030	1	Valve Spring		
38	18024143	1	Ball,steel 1/2"		
39	24810027	1	Washer		
40	24810024	1	Plug, Oil Filter DRAIN		
41	24820208	1	Cover Front		
42	24820214	1	Grommet		
43	24810011	1	Plug,oil drain		
44	24810088	1	Washer 14-20-1,5 [NP]		
45	52101314	1	Bolt DIN 931 M10-55 8.8		
46	24816081	1	Aspiration Tube TM 880A		
NS	24820013	2	Bolt DIN 912 M10-30 8.8 [NP] [NS]		
NS	24810026.1	3	Cover [NS]		
NS	24820090	2	Pin [NS]		
NS	52103311	9	Bolt DIN 912 M10-40 8.8 [NS]		

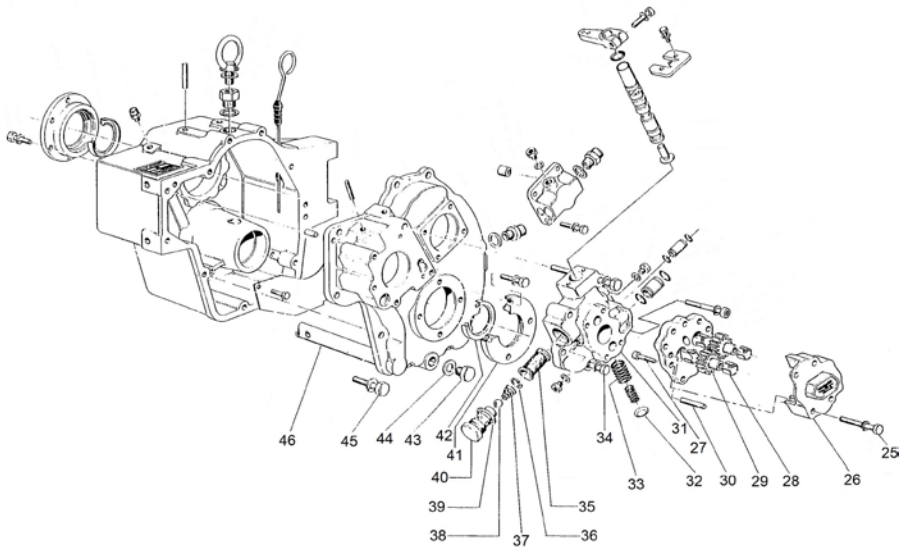

[NP] Not provided
[NS] Not shown

Gearbox TM-170

D_5026_1.3			Sheet 1.3/4		
FIG.	REF.	QTY	DESCR.	FROM	UPTO
47	24820062	2	Tube, Racord		
48	24820063	2	O-Ring D. 15X1,7		
49	24820013	2	Bolt DIN 912 M10-30 8.8 [NP]		
50	24810026.1	3	Cover		
51	24810095	3	Gear, ConductOR		
52	24810056	1	O-Ring D. 15,08X2,62 [NP]		
54	24810044	2	Bolt DIN 933 M6-16 8.8 [NP]		
55	24810042	2	Washer GROWER DIN 127-6 [NP]		
56	24810041	1	Support		
57	24810051	1	Distributor		
58	24810052	1	Valve		
59	24820075	4	Washer GROWER DIN 127-10 [NP]		
60	24820076	4	Bolt DIN 933 M10-30 8.8 [NP]		
61	24820087	1	Bolt DIN 931 M10-130 8.8 [NP]		
62	24820060	1	Tube, Racord		
63	24820059	2	O-Ring D. 10X1,7		
82	24810424	1	Lever		
NS	56000083	1	Washer 21-26-1,5 [NS]		
NS	24820102	1	Cover, REAR [NS]		
NS	24830105	1	Plug [NS]		
NS	24820103	1	Oil Grommet [NS]		

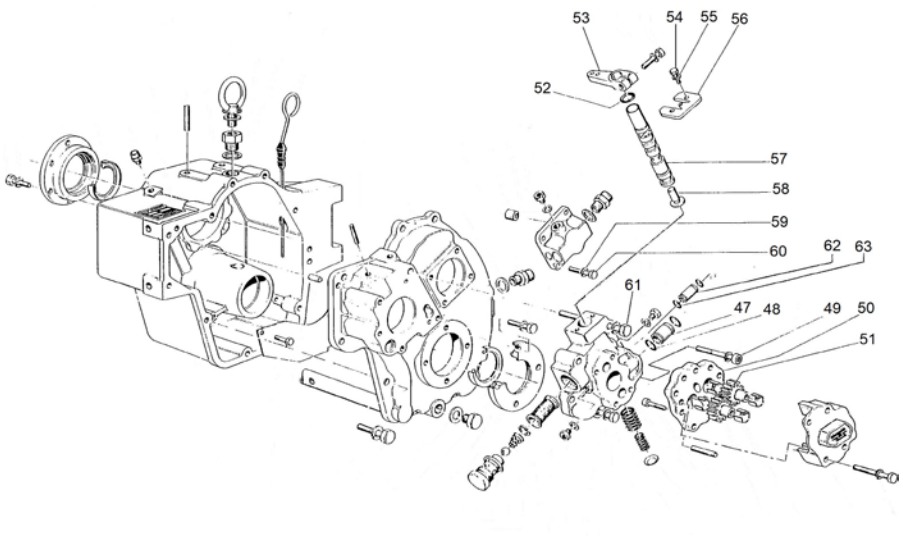

[NP] Not provided
[NS] Not shown

Gearbox TM-170

	D_5027_2		Input Shaft 2/4		
FIG.	REF.	QTY	DESCR.	FROM	UPTO
1	24820134	1	Conical Roller Bearing 32011-JR		
2	24810334	1	Plug		
3	24820130	1	Bell		
4	24820125	1	Washer		
5	24820124	1	Piston		
6	24820115	9	Disk		
7	24820116	8	Disk		
8	24810211	1	KEY		
9	24820126	1	Washer		
10	24820101	1	Input Shaft		
11	24810328	2	Washer		
12	24810326	1	Plug		
13	24820122	1	Spring		
14	24820123	1	Bearing		
141	24810333	0	Spacer [VAR]		
15	24820113	1	Grommet		
16	24820129	1	Ring		
17	24820128	1	SNAP Ring		
18A	24822302	1	Gear R. 1,50 TM 170		
18B	24823302	1	Gear R. 2,04 TM 170		
18C	24824302	1	Gear R. 2.50 TM 170		
18D	24825302	1	Gear Red. 2,94 TM 170		
19	24820117	1	Bushing		
20	24820118	1	Ring		
21	24820121	1	Roller Bearing AXK-4060		
22	24820105	1	Washer		
23	24820104	1	Conical Roller Bearing 32307		

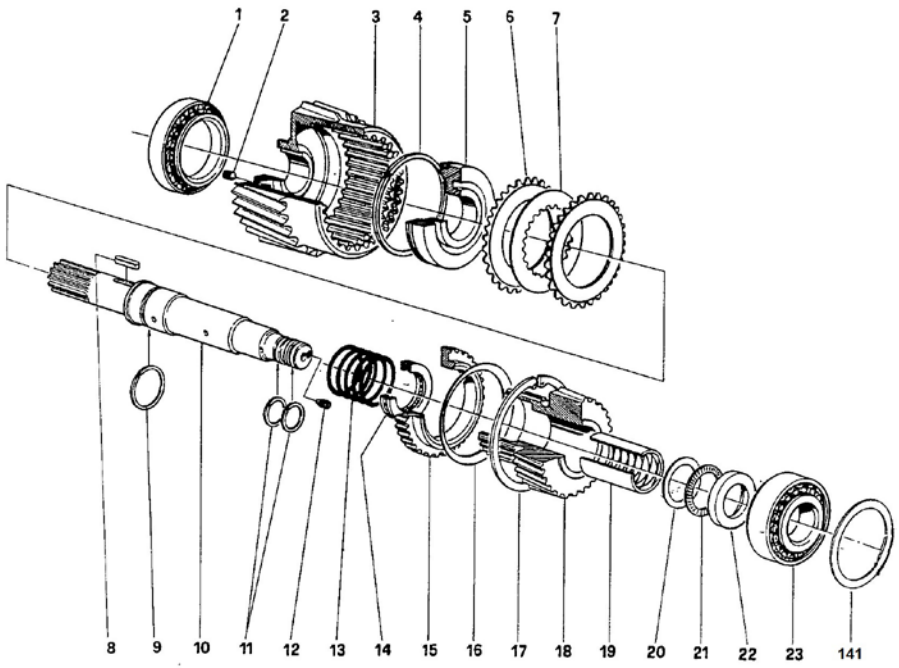

[VAR] Variable according to repair

Gearbox TM-170

D_5027_3			Intermediate Shaft 3/4		
FIG.	REF.	QTY	DESCR.	FROM	UPTO
141	24810333	0	Spacer [VAR]		
24	24820134	1	Conical Roller Bearing 32011-JR		
25	24810334	1	Plug		
26	24820330	1	Bell		
27	24820125	1	Washer		
28	24820124	1	Piston		
29	24820115	9	Disk		
30	24820116	8	Disk		
31	24810211	1	KEY		
32	24820126	1	Washer		
33	24820301	1	INTERMEDIATE Shaft		
34	24810328	2	Washer		
35	24810326	1	Plug		
36	24820122	1	Spring		
37	24820123	1	Bearing		
38	24820113	1	Grommet		
39	24820129	1	Ring		
40	24820128	1	SNAP Ring		
41A	24822302	1	Gear R. 1,50 TM 170		
41B	24823302	1	Gear R. 2,04 TM 170		
41C	24824302	1	Gear R. 2.50 TM 170		
41D	24825302	1	Gear Red. 2,94 TM 170		
42	24820117	1	Bushing		
43	24820118	1	Ring		
44	24820121	1	Roller Bearing AXK-4060		
45	24820105	1	Washer		
46	24820104	1	Conical Roller Bearing 32307		

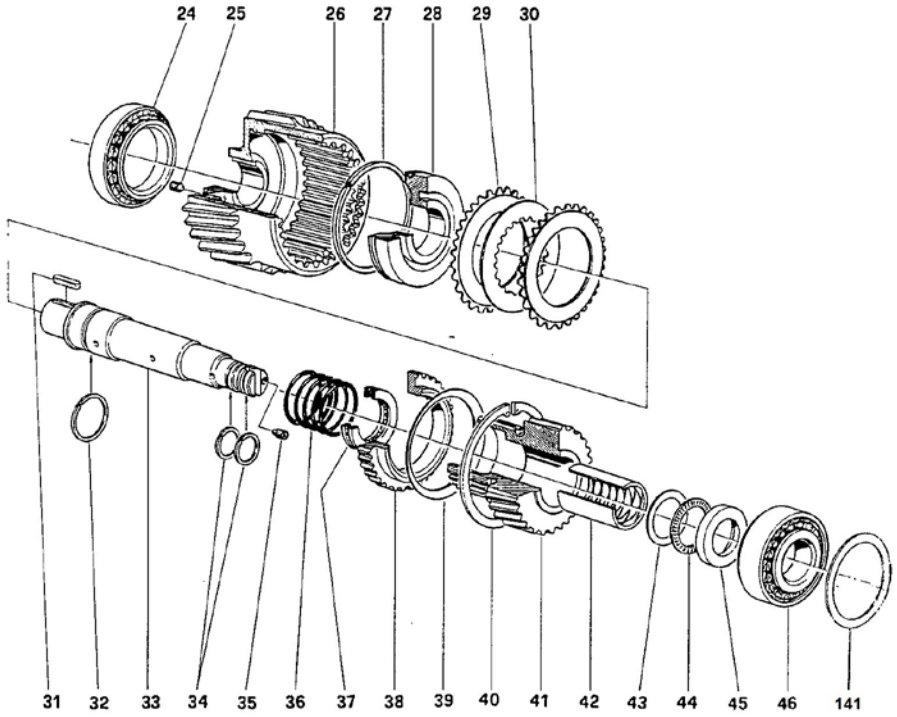

[VAR] Variable according to repair

Gearbox TM-170

	D_5027_4		Output Shaft 4/4		
FIG.	REF.	QTY	DESCR.	FROM	UPTO
140	24820333.1	0	Shim [VAR]		
47	24820206	1	Conical Roller Bearing 33210		
49/50	24824201C	1	Gear+Output Shaft Kit+Spacer		
49/50	24823201C	1	Gear+Output Shaft Kit+Spacer		
49/50	24825201C	1	Gear+Output Shaft Kit+Spacer		
49/50	24822201C	1	Gear+Output Shaft Kit+Spacer		
51	24820209	1	Spacer, Output Shaft		
52	24820212	1	Conical Roller Bearing 30210-J2/Q		
53	24820224	1	Flange, Output		
54	24820225	1	O-Ring D. 45X3,5		
55	24820219	1	BUTT Washer		
56	24820220	1	Pin		
57	24820221	1	1 [NP]		
58	24820222.1	1	Screw		

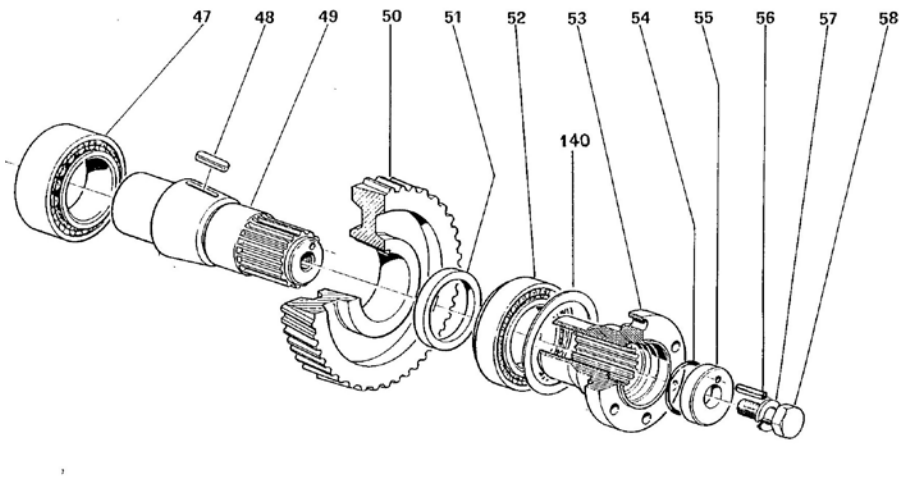

[NP] Not provided

[VAR] Variable according to repair

Gearbox TM-170

	D_5027_5		Maintenance Kit		
FIG.	**REF.**	**QTY**	**DESCR.**	**FROM**	**UPTO**
1	24820401	1	Kit Gasket		
2	A0105000	1	15W40 Sole Diesel Oil 5L		
3	24820403	2	Clutch Plate Kit		

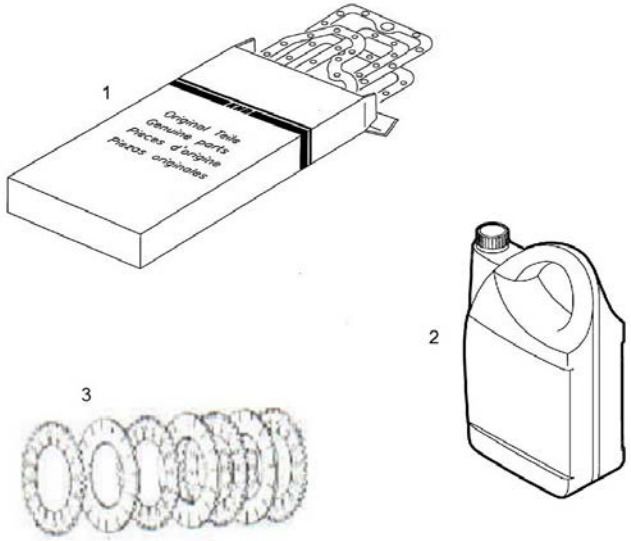

Gearbox TM-170A

D_5027_1.1			Sheet 1.1/4		
FIG.	REF.	QTY	DESCR.	FROM	UPTO
1	24820090	2	Pin		
2	24816080	1	Plate Pipe		
3	24810082	2	Bolt DIN 933 M8-10 8.8 [NP]		
4	24820001	1	Front Body TM 170		
5	24810047	6	Bolt DIN 933 M8-25 8.8 [NP]		
6	24810014	6	Washer GROWER DIN 127-8 [NP]		
7	24820072	1	Cover Input Shaft		
8	24820103	1	Oil Grommet		
9	24810065	1	Plug		
10	24820005.1	1	NAME Plate		
11	24810071	2	Stud		
12	56000083	1	Washer 21-26-1,5		
13	24810012	1	Nut		
14	24810063	1	Plane Washer		
15	24810068	1	Plug		
16	24810008	1	ROD, Oil LEVEL		
17	24820071	2	Stud		
18	24820002	1	Reverse Body TM 170		
19	24810059	1	Plane Washer		
20	24810060	1	Racord		
21	24810062	1	Valve BY PASS [NP]		
22	24820086	1	Washer 8-13-1,5 [NP]		
23	24830105	1	Plug		
24	24820102	1	Cover, REAR		

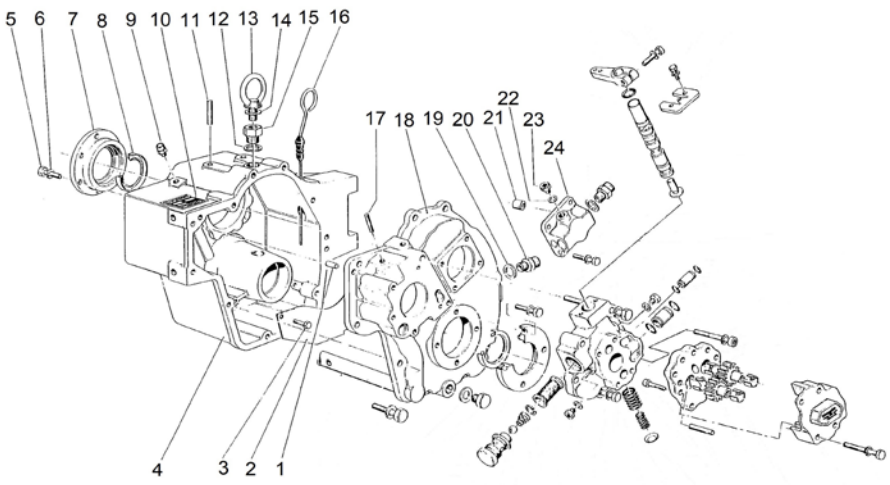

[NP] Not provided

Gearbox TM-170A

D_5026_1.2			Sheet 1.2/4		
FIG.	REF.	QTY	DESCR.	FROM	UPTO
25	24810013	4	Bolt DIN 931 M8-65 8.8 [NP]		
26	24820015.1	1	Oil Pump Body		
27	24820025.1	3	Bolt DIN 912 M6-25 8.8 [NP]		
28	24810025	4	Bushing		
29	24810096	1	Gear, Conduct		
30	24820023.1	2	Pin		
31	24820026	1	Distributor Cap		
32	24810055	1	Expansion Plug		
33	24816054	1	Spring, Valve		
34	24820098	2	Bolt DIN 912 M10-50 8.8 [NP]		
35	24810035	1	Oil Filter		
36	24810032	1	SNAP Ring		
37	24810030	1	Valve Spring		
38	18024143	1	Ball,steel 1/2"		
39	24810027	1	Washer		
40	24810024	1	Plug, Oil Filter DRAIN		
41	24820208	1	Cover Front		
42	24820214	1	Grommet		
43	24810011	1	Plug,oil drain		
44	24810088	1	Washer 14-20-1,5 [NP]		
45	52101314	1	Bolt DIN 931 M10-55 8.8		
46	24816081	1	Aspiration Tube TM 880A		
NS	24820013	2	Bolt DIN 912 M10-30 8.8 [NP] [NS]		
NS	24810026.1	3	Cover [NS]		
NS	24820090	2	Pin [NS]		
NS	52103311	9	Bolt DIN 912 M10-40 8.8 [NS]		

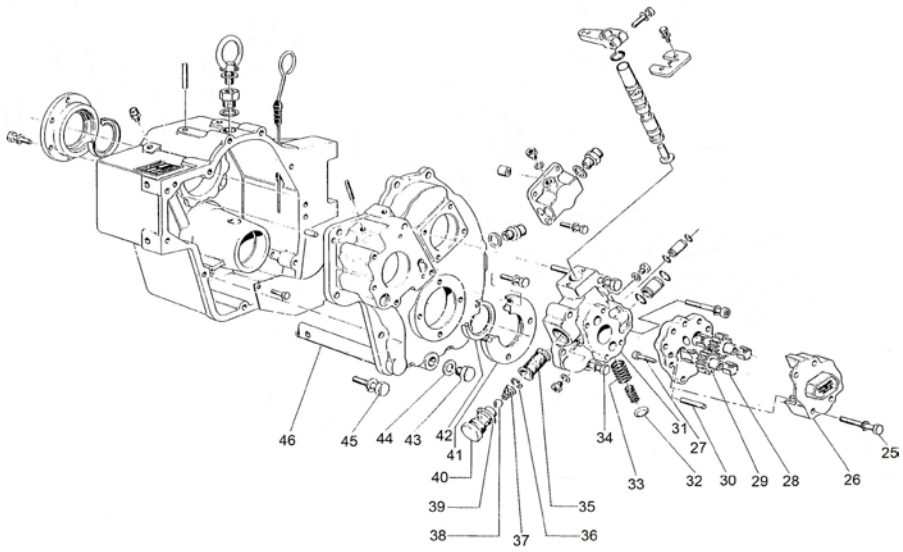

[NP] Not provided
[NS] Not shown

Gearbox TM-170A

D_5026_1.3			Sheet 1.3/4		
FIG.	REF.	QTY	DESCR.	FROM	UPTO
47	24820062	2	Tube, Racord		
48	24820063	2	O-Ring D. 15X1,7		
49	24820013	2	Bolt DIN 912 M10-30 8.8 [NP]		
50	24810026.1	3	Cover		
51	24810095	3	Gear, ConductOR		
52	24810056	1	O-Ring D. 15,08X2,62 [NP]		
54	24810044	2	Bolt DIN 933 M6-16 8.8 [NP]		
55	24810042	2	Washer GROWER DIN 127-6 [NP]		
56	24810041	1	Support		
57	24810051	1	Distributor		
58	24810052	1	Valve		
59	24820075	4	Washer GROWER DIN 127-10 [NP]		
60	24820076	4	Bolt DIN 933 M10-30 8.8 [NP]		
61	24820087	1	Bolt DIN 931 M10-130 8.8 [NP]		
62	24820060	1	Tube, Racord		
63	24820059	2	O-Ring D. 10X1,7		
82	24810424	1	Lever		
NS	56000083	1	Washer 21-26-1,5 [NS]		
NS	24820102	1	Cover, REAR [NS]		
NS	24830105	1	Plug [NS]		
NS	24820103	1	Oil Grommet [NS]		

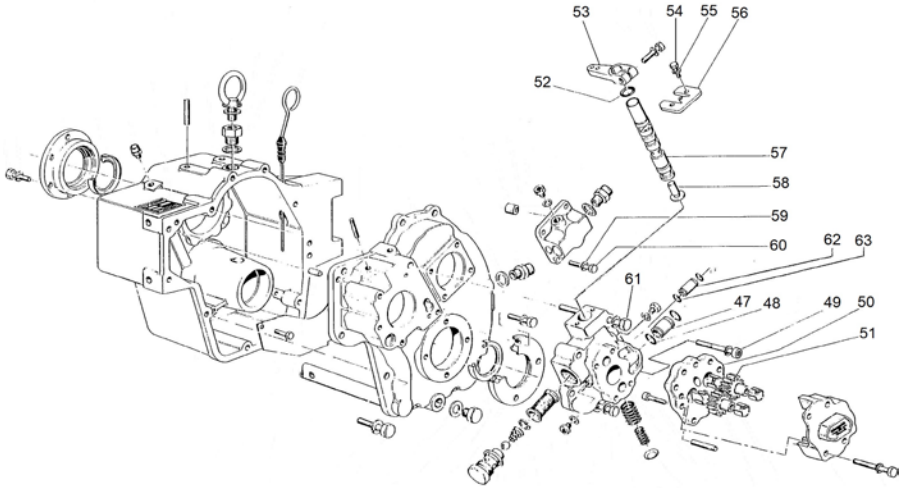

[NP] Not provided
[NS] Not shown

Gearbox TM-170A

	D_5028_2		Input Shaft 2/4		
FIG.	REF.	QTY	DESCR.	FROM	UPTO
1	24820134	1	Conical Roller Bearing 32011-JR		
2	24810334	1	Plug		
3	24820130	1	Bell		
4	24820125	1	Washer		
5	24820124	1	Piston		
6	24820115	9	Disk		
7	24820116	8	Disk		
8	24810211	1	KEY		
9	24820126	1	Washer		
10	24820101	1	Input Shaft		
11	24810328	2	Washer		
12	24810326	1	Plug		
13	24820122	1	Spring		
14	24820123	1	Bearing		
141	24810333	0	Spacer [VAR]		
15	24820113	1	Grommet		
16	24820129	1	Ring		
17	24820128	1	SNAP Ring		
18A	24822302	1	Gear R. 1,50 TM 170		
18B	24823302	1	Gear R. 2,04 TM 170		
18C	24824302	1	Gear R. 2.50 TM 170		
19	24820117	1	Bushing		
20	24820118	1	Ring		
21	24820121	1	Roller Bearing AXK-4060		
22	24820105	1	Washer		
23	24820104	1	Conical Roller Bearing 32307		

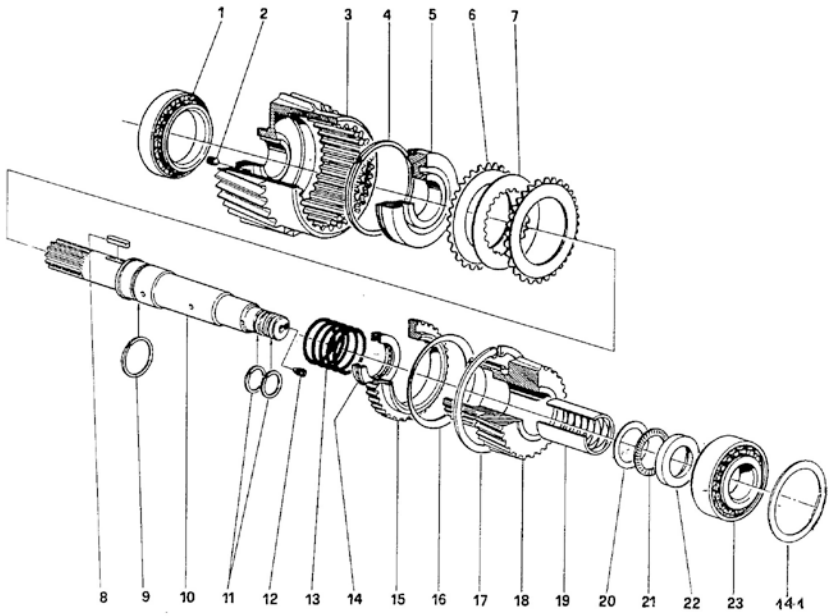

[VAR] Variable according to repair

Gearbox TM-170A

	D_5028_3		Intermediate Shaft 3/4		
FIG.	REF.	QTY	DESCR.	FROM	UPTO
141	24810333	0	Spacer [VAR]		
24	24820134	1	Conical Roller Bearing 32011-JR		
25	24810334	1	Plug		
26	24820330	1	Bell		
27	24820125	1	Washer		
28	24820124	1	Piston		
29	24820115	9	Disk		
30	24820116	8	Disk		
31	24810211	1	KEY		
32	24820126	1	Washer		
33	24820301	1	INTERMEDIATE Shaft		
34	24810328	2	Washer		
35	24810326	1	Plug		
36	24820122	1	Spring		
37	24820123	1	Bearing		
38	24820113	1	Grommet		
39	24820129	1	Ring		
40	24820128	1	SNAP Ring		
41A	24822302A	1	Gear R. 1,53 TM 170A		
41B	24823302A	1	Gear R. 2,08 TM 170A		
41C	24824302A	1	Gear R. 2,60 TM 170A		
42	24820117	1	Bushing		
43	24820118	1	Ring		
44	24820121	1	Roller Bearing AXK-4060		
45	24820105	1	Washer		
46	24820104	1	Conical Roller Bearing 32307		

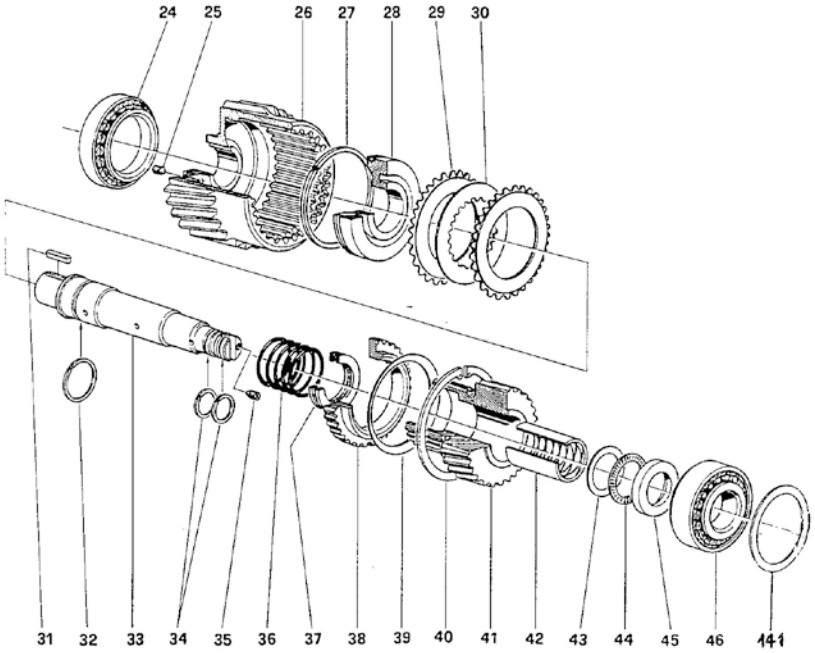

[VAR] Variable according to repair

Gearbox TM-170A

	D_5028_4		Output Shaft 4/4		
FIG.	REF.	QTY	DESCR.	FROM	UPTO
140	24820333.1	0	Shim [VAR]		
47	24820206	1	Conical Roller Bearing 33210		
49/50	24823201AC	1	Gear+Output Shaft Kit+Spacer		
49/50	24822201AC	1	Gear+Output Shaft Kit+Spacer		
49/50	24824201AC	1	Gear+Output Shaft Kit+Spacer		
51	24820209	1	Spacer, Output Shaft		
52	24820212	1	Conical Roller Bearing 30210-J2/Q		
53	24820224	1	Flange, Output		
54	24820225	1	O-Ring D. 45X3,5		
55	24820219	1	BUTT Washer		
56	24820220	1	Pin		
57	24820221	1	1 [NP]		
58	24820222.1	1	Screw		

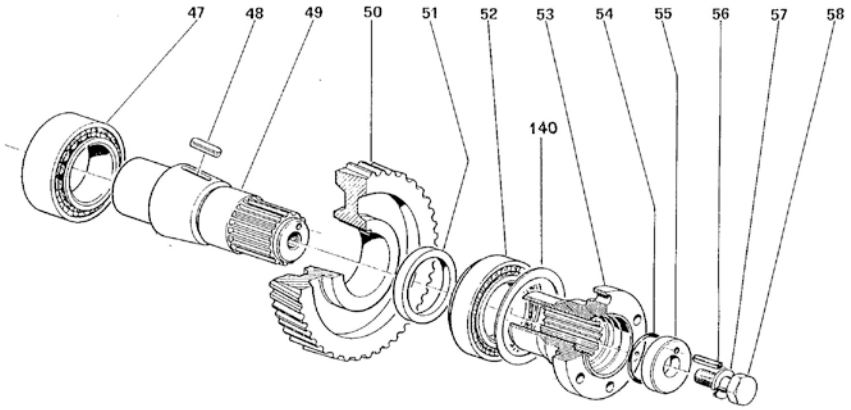

[NP] Not provided

[VAR] Variable according to repair

Gearbox TM-170A

	D_5027_5		Maintenance Kit		
FIG.	**REF.**	**QTY**	**DESCR.**	**FROM**	**UPTO**
1	24820401	1	Kit Gasket		
2	A0105000	1	15W40 Sole Diesel Oil 5L		
3	24820403	2	Clutch Plate Kit		

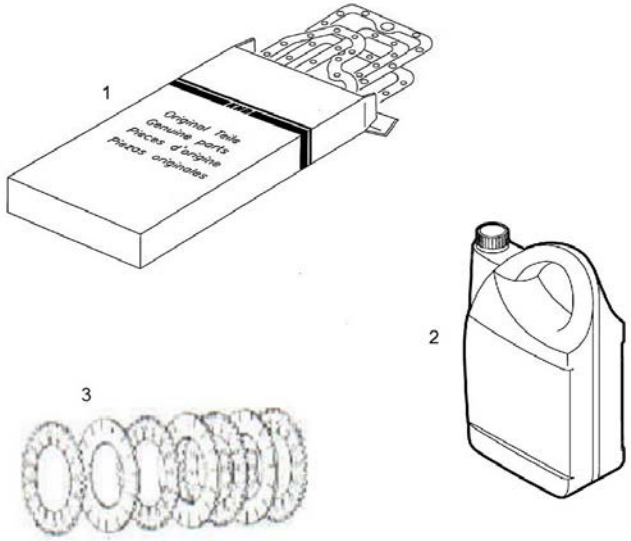

Gearbox TM-93

D_5030_1.1			Sheet 1.1/4		
FIG.	REF.	QTY	DESCR.	FROM	UPTO
100	24810103S	1	Grommet, Oil SILICON		
106	24830008	1	ROD, LEVEL Oil		
107	24810001	1	Front Body TM 93		
108	24810080	1	Plate Pipe [NP]		
109	24810081	1	ASPIRATION Tube [NP]		
110	24810082	2	Bolt DIN 933 M8-10 8.8 [NP]		
113	24810085	2	Pin		
114	24810002	1	Reverse Body TM 93		
117	24810088	1	Washer 14-20-1,5 [NP]		
118	24810011	1	Plug,oil drain		
119	24810089	1	Screw		
120	24810090	1	Cover		
125	24810214	1	Oil Grommet		
126	24810224	1	Flange, Output		
127	24810219	1	BUTT Washer		
128	24840220	1	Pin		
129	24810221	1	Washer GROWER DIN 127-14 [NP]		
130	24810222	1	Bolt DIN 933 M14X40 12.9		
131	24810095	1	Gear, ConductOR		
132	24810096	1	Gear, Conduct		
134	24810098	3	Screw		
NS	24810043	1	Pump Assy Oil [NS]		

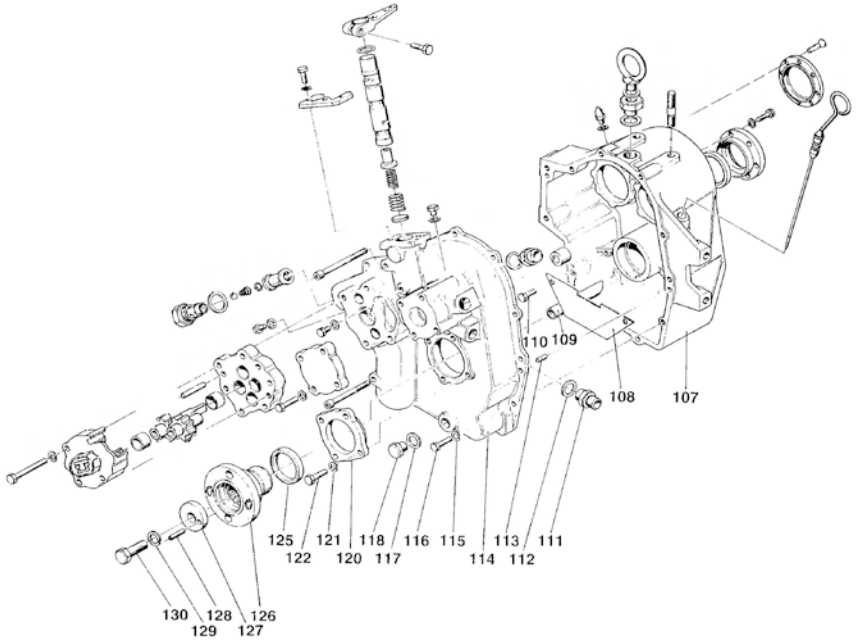

[NP] Not provided
[NS] Not shown

Gearbox TM-93

D_5030_1.2			Sheet 1.2/4		
FIG.	REF.	QTY	DESCR.	FROM	UPTO
119	24810089	1	Screw		
123	53033008	4	Washer GROWER DIN 127-8		
124	52102258	4	Bolt DIN 933 M8-25 8.8		
131	24810095	1	Gear, ConductOR		
132	24810096	1	Gear, Conduct		
58	24810013	4	Bolt DIN 931 M8-65 8.8 [NP]		
59	24810014	4	Washer GROWER DIN 127-8 [NP]		
61	24810025	2	Bushing		
63	24820023.1	2	Pin		
64	24810024	1	Plug, Oil Filter DRAIN		
67	24810027	1	Washer		
68	24810028	1	Screw		
69	18024143	1	Ball,steel 1/2"		
70	24810030	1	Valve Spring		
71	24810032	1	SNAP Ring		
72	24810035	1	Oil Filter		
73	24810036	2	Washer		
74	24810038	1	Cover		
76	24810040	1	Screw		

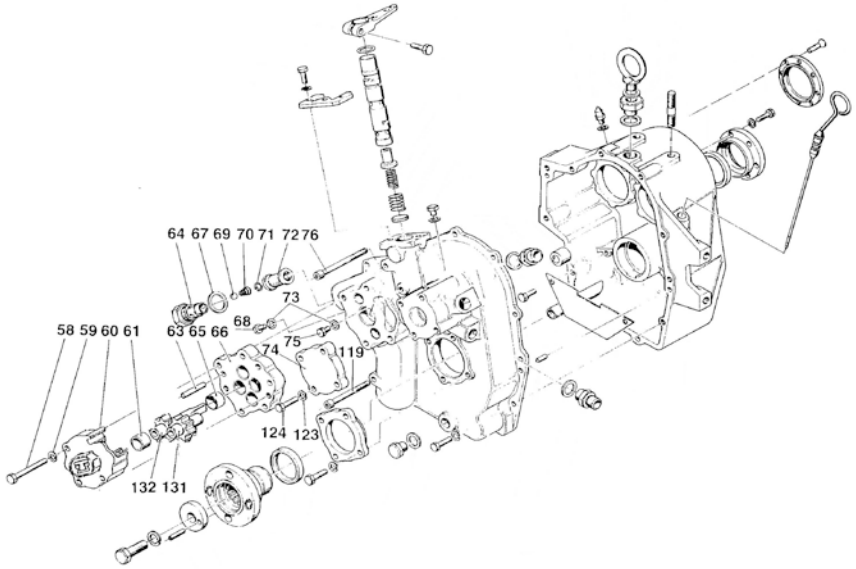

[NP] Not provided

Gearbox TM-93

D_5030_1.3			Sheet 1.3/4		
FIG.	REF.	QTY	DESCR.	FROM	UPTO
100	24810103S	1	Grommet, Oil SILICON		
101	24810072	1	Cover		
102	53033008	6	Washer GROWER DIN 127-8		
103	52102258	6	Bolt DIN 933 M8-25 8.8		
104	24810075	1	Cover		
105	24810076	8	Screw		
106	24830008	1	ROD, LEVEL Oil		
77	24810041	1	Support		
78	24810042	2	Washer GROWER DIN 127-6 [NP]		
79	24810044	2	Bolt DIN 933 M6-16 8.8 [NP]		
80	24810056	1	O-Ring D. 15,08X2,62 [NP]		
81	24810424	1	Lever		
82	24810047	1	Bolt DIN 933 M8-25 8.8 [NP]		
83	24810051	1	Distributor		
84	24810052	1	Valve		
85	24810053	1	Spring, Valve INNER		
86	24810054	1	Spring, Valve		
87	24810055	1	Expansion Plug		
88	24810028	1	Screw		
89	24810036	1	Washer		
90	24810059	1	Plane Washer		
91	24810060	1	Racord		
92	24810062	1	Valve BY PASS [NP]		
93	24810063	2	Plane Washer		
94	24810065	1	Plug		
96	24810012	1	Nut		
97	24810068	1	Plug		
98	56000083	1	Washer 21-26-1,5		
99	24810071	2	Stud		

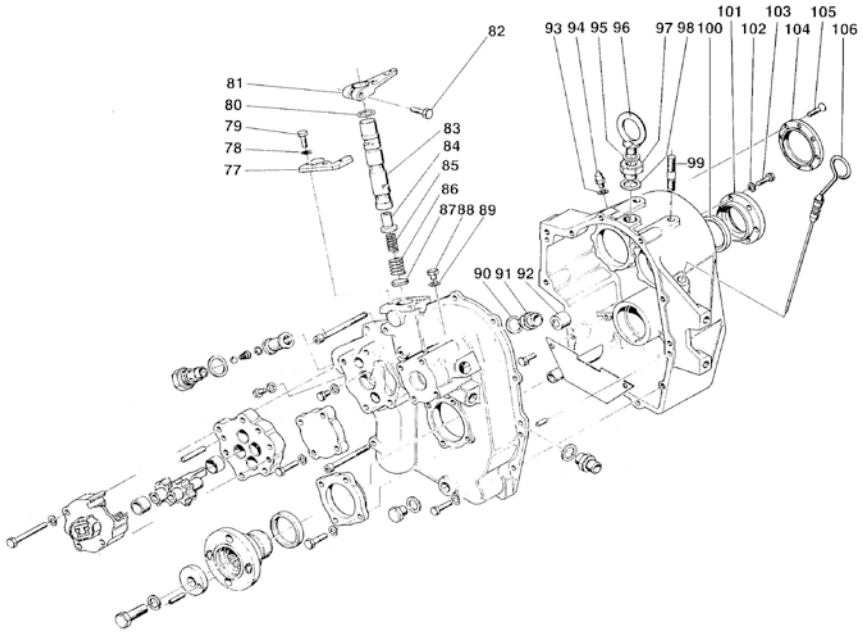

[NP] Not provided

Gearbox TM-93

D_5030_2			Intermediate Shaft 2/4		
FIG.	REF.	QTY	DESCR.	FROM	UPTO
1	24870207	1	Bearing		
2	24810307	1	Washer		
3	24810309	1	Roller		
4	24810310	1	Ring		
5A	24812302	1	Gear R. 1,5 TM 93		
5B	24813302	1	Gear R. 2 TM 93		
5C	24814302	1	Gear R. 2,4 TM 93		
5D	24815302	1	Gear R. 2,8 TM 93		
6	24810312	1	SNAP Ring		
7	24810313	1	Ring		
8	24810314	1	Grommet		
9	24810315	10	Disk		
10	24810316	9	Disk		
11	24810317	1	BushING		
12	24870118	1	THRUST RACE		
13	24810309	1	Roller		
14	24870318	1	THRUST RACE		
15	24810322	1	Spring		
16	24810323	1	Washer		
17	24810324	1	Piston		
18	24810325	1	Washer		
19	24810326	1	Plug		
20	24810301	1	INTERMEDIATE Shaft		
21	24810328	2	Washer		
22	24810329	1	KEY		
23	24810330	1	Bell		
24	24870206	1	Bearing		
25	24810333	0	Spacer [VAR]		
26	24810334	1	Plug		

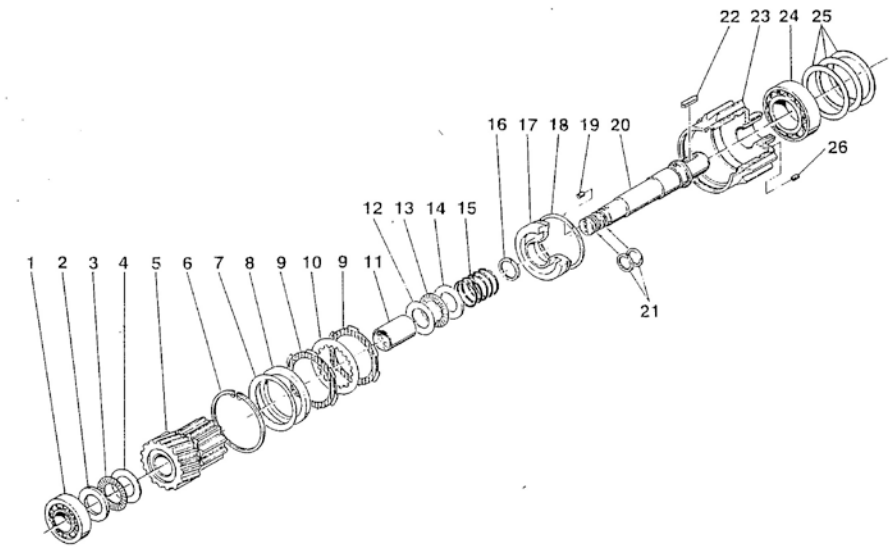

[VAR] Variable according to repair

Gearbox TM-93

D_5030_3			Input Shaft 3/4		
FIG.	REF.	QTY	DESCR.	FROM	UPTO
27	24870207	1	Bearing		
28	24810307	1	Washer		
29	24810309	1	Roller		
30	(*)	1	Not available [NP]		
31A	24812302	1	Gear R. 1,5 TM 93		
31B	24813302	1	Gear R. 2 TM 93		
31C	24814302	1	Gear R. 2,4 TM 93		
31D	24815302	1	Gear R. 2,8 TM 93		
32	24810312	1	SNAP Ring		
33	24810313	1	Ring		
34	24810314	1	Grommet		
35	24810315	10	Disk		
36	24810316	9	Disk		
37	24810317	1	BushING		
38	24870118	1	THRUST RACE		
39	24810309	1	Roller		
40	24870318	1	THRUST RACE		
41	24810322	1	Spring		
42	24810323	1	Washer		
43	24810324	1	Piston		
44	24810325	1	Washer		
45	24810328	2	Washer		
46	24810326	1	Plug		
47	24810101	1	Input Shaft		
48	24810330	1	Bell		
49	24810329	1	KEY		
50	24810334	1	Plug		
51	24870206	1	Bearing		

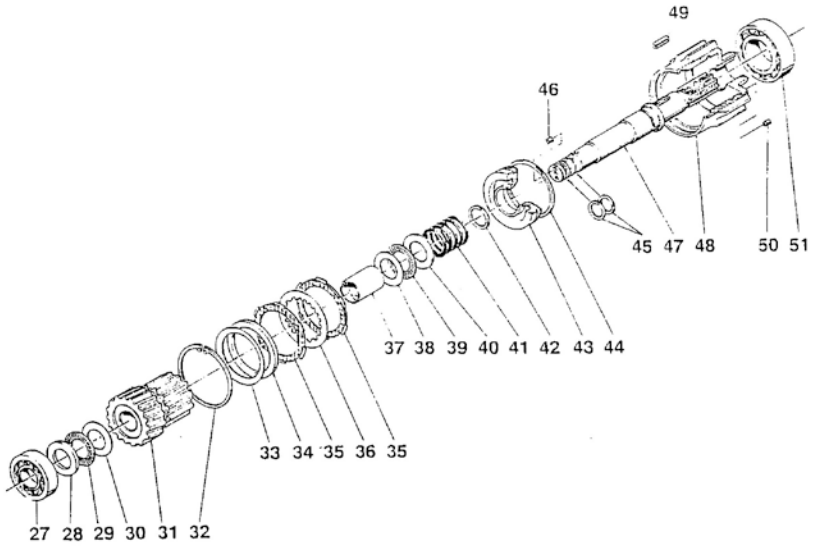

[NP] Not provided

Gearbox TM-93

	D_5030_4		Output Shaft 4/4		
FIG.	REF.	QTY	DESCR.	FROM	UPTO
52	24810206	1	Conical Roller Bearing 32208		
53/55	24815201C	1	Gear+Output Shaft Kit		
53/55	24813201C	1	Gear+Output Shaft Kit		
53/55	24812201C	1	Gear+Output Shaft Kit		
53/55	24814201C	1	Gear+Output Shaft Kit		
54	24810209	1	O-Ring D. 38X3,5		
57	24810212	1	Bearing		

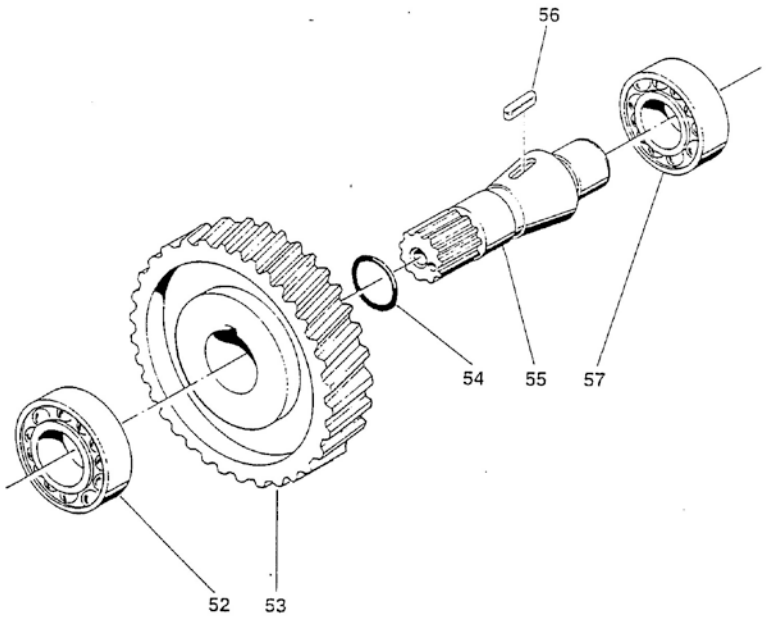

Gearbox TM-93

	D_5030_5		Maintenance Kit		
FIG.	**REF.**	**QTY**	**DESCR.**	**FROM**	**UPTO**
1	24810401	1	Kit Gasket		
2	A0105000	1	15W40 Sole Diesel Oil 5L		
3	24810403	2	Clutch Plate Kit		

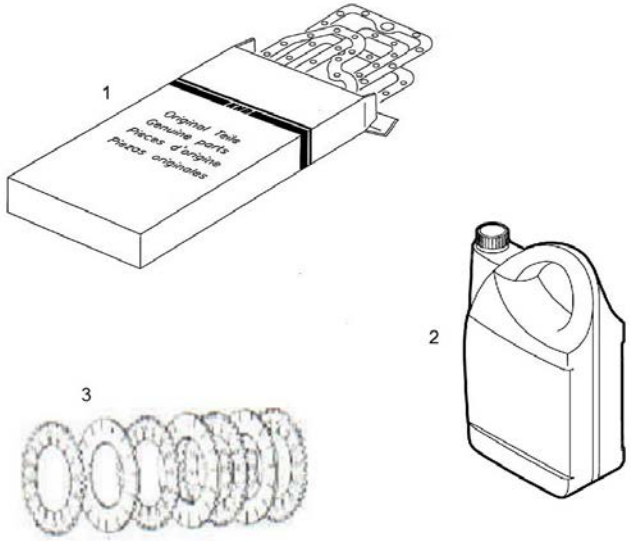

Gearbox TM-93A

D_5031_1.1			Sheet 1.1/4		
FIG.	REF.	QTY	DESCR.	FROM	UPTO
107	24810001A	1	Front Body TM 93A		
108	24810080	1	Plate Pipe [NP]		
109	24810081	1	ASPIRATION Tube [NP]		
110	24810082	2	Bolt DIN 933 M8-10 8.8 [NP]		
113	24810085	2	Pin		
114	24810002A	1	Reverse Body TM 93A		
117	24810088	1	Washer 14-20-1,5 [NP]		
118	24810011	1	Plug,oil drain		
119	24810089	1	Screw		
120	24810090	1	Cover		
125	24810214	1	Oil Grommet		
126	24810224	1	Flange, Output		
127	24810219	1	BUTT Washer		
128	24840220	1	Pin		
129	24810221	1	Washer GROWER DIN 127-14 [NP]		
130	24810222	1	Bolt DIN 933 M14X40 12.9		
131	24810095	1	Gear, ConductOR		
132	24810096	1	Gear, Conduct		
134	24810098	3	Screw		
NS	24810043	1	Pump Assy Oil [NS]		

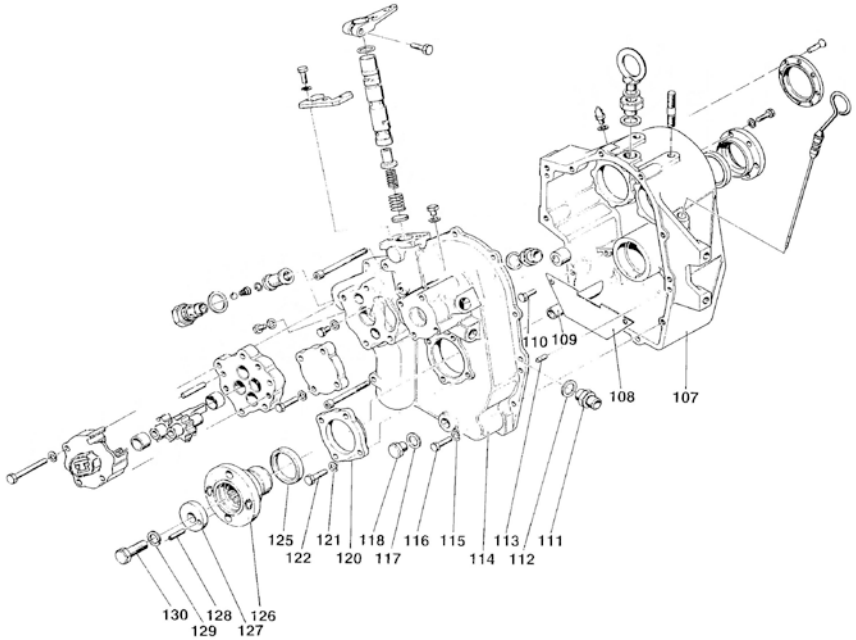

[NP] Not provided
[NS] Not shown

Gearbox TM-93A

D_5030_1.2			Sheet 1.2/4		
FIG.	REF.	QTY	DESCR.	FROM	UPTO
119	24810089	1	Screw		
123	53033008	4	Washer GROWER DIN 127-8		
124	52102258	4	Bolt DIN 933 M8-25 8.8		
131	24810095	1	Gear, ConductOR		
132	24810096	1	Gear, Conduct		
58	24810013	4	Bolt DIN 931 M8-65 8.8 [NP]		
59	24810014	4	Washer GROWER DIN 127-8 [NP]		
61	24810025	2	Bushing		
63	24820023.1	2	Pin		
64	24810024	1	Plug, Oil Filter DRAIN		
67	24810027	1	Washer		
68	24810028	1	Screw		
69	18024143	1	Ball,steel 1/2"		
70	24810030	1	Valve Spring		
71	24810032	1	SNAP Ring		
72	24810035	1	Oil Filter		
73	24810036	2	Washer		
74	24810038	1	Cover		
76	24810040	1	Screw		

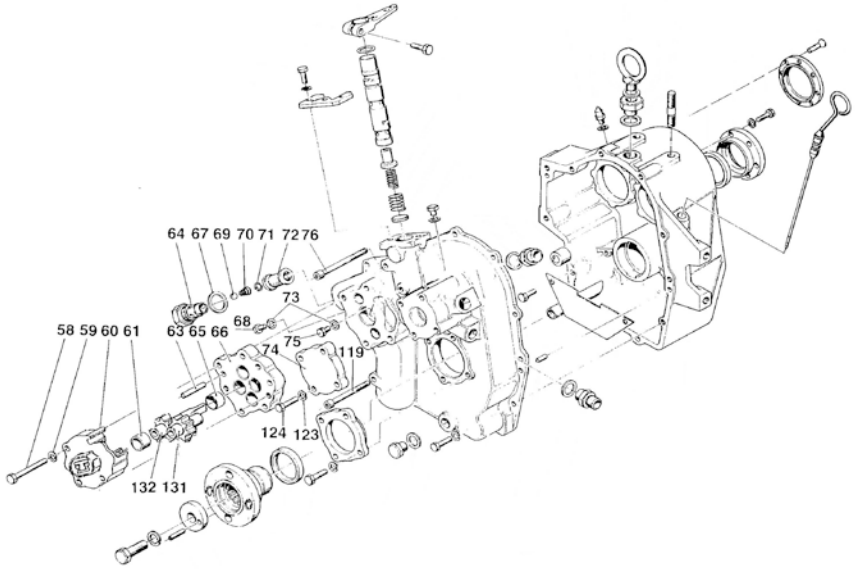

[NP] Not provided

Gearbox TM-93A

D_5030_1.3			Sheet 1.3/4		
FIG.	REF.	QTY	DESCR.	FROM	UPTO
100	24810103S	1	Grommet, Oil SILICON		
101	24810072	1	Cover		
102	53033008	6	Washer GROWER DIN 127-8		
103	52102258	6	Bolt DIN 933 M8-25 8.8		
104	24810075	1	Cover		
105	24810076	8	Screw		
106	24830008	1	ROD, LEVEL Oil		
77	24810041	1	Support		
78	24810042	2	Washer GROWER DIN 127-6 [NP]		
79	24810044	2	Bolt DIN 933 M6-16 8.8 [NP]		
80	24810056	1	O-Ring D. 15,08X2,62 [NP]		
81	24810424	1	Lever		
82	24810047	1	Bolt DIN 933 M8-25 8.8 [NP]		
83	24810051	1	Distributor		
84	24810052	1	Valve		
85	24810053	1	Spring, Valve INNER		
86	24810054	1	Spring, Valve		
87	24810055	1	Expansion Plug		
88	24810028	1	Screw		
89	24810036	1	Washer		
90	24810059	1	Plane Washer		
91	24810060	1	Racord		
92	24810062	1	Valve BY PASS [NP]		
93	24810063	2	Plane Washer		
94	24810065	1	Plug		
96	24810012	1	Nut		
97	24810068	1	Plug		
98	56000083	1	Washer 21-26-1,5		
99	24810071	2	Stud		

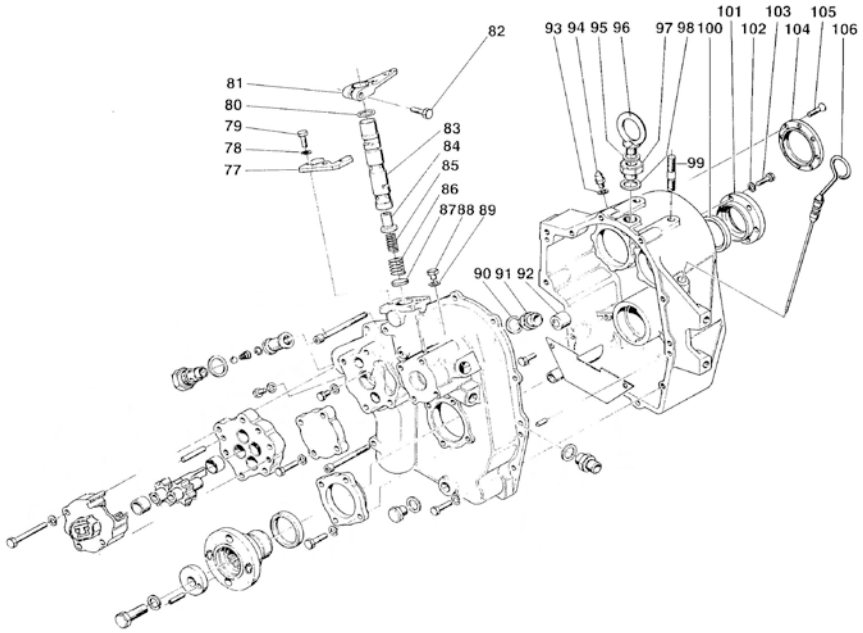

[NP] Not provided

Gearbox TM-93A

D_5031_2			Intermediate Shaft 2/4		
FIG.	REF.	QTY	DESCR.	FROM	UPTO
1	24870207	1	Bearing		
2	24810307	1	Washer		
3	24810309	1	Roller		
4	24810310	1	Ring		
5	24814302A	1	Gear R. 2,4 TM 93A		
5	24812302A	1	Gear R. 1,5 TM 93A		
5	24813302A	1	Gear Red. 2 TM 93A		
6	24810312	1	SNAP Ring		
7	24810313	1	Ring		
8	24810314	1	Grommet		
9	24810315	10	Disk		
10	24810316	9	Disk		
11	24810317	1	BushING		
12	24870118	1	THRUST RACE		
13	24810309	1	Roller		
14	24870318	1	THRUST RACE		
15	24810322	1	Spring		
16	24810323	1	Washer		
17	24810324	1	Piston		
18	24810325	1	Washer		
19	24810326	1	Plug		
20	24810301	1	INTERMEDIATE Shaft		
21	24810328	2	Washer		
22	24810329	1	KEY		
23	24810330	1	Bell		
24	24870206	1	Bearing		
25	24810333	0	Spacer [VAR]		
26	24810334	1	Plug		

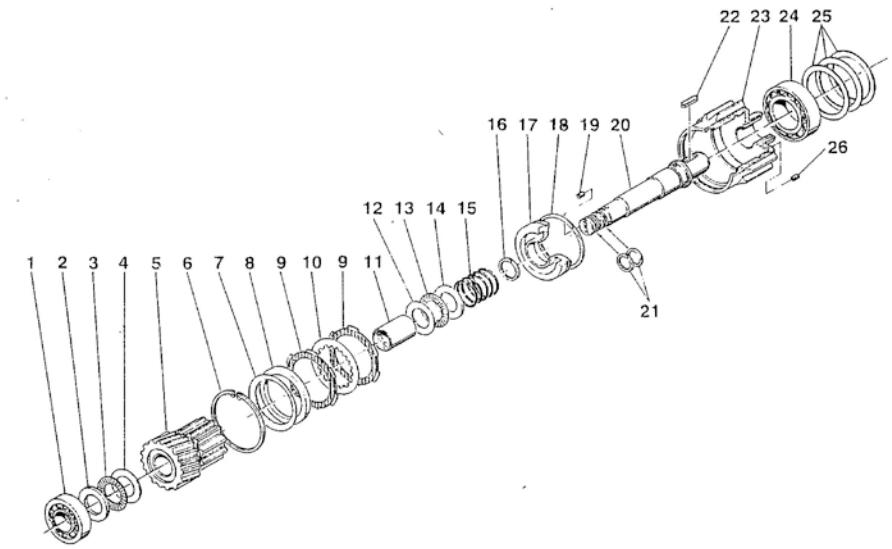

[VAR] Variable according to repair

Gearbox TM-93A

	D_5031_3		Input Shaft 3/4		
FIG.	REF.	QTY	DESCR.	FROM	UPTO
27	24870207	1	Bearing		
28	24810307	1	Washer		
29	24810309	1	Roller		
30	(*)	1	Not available [NP]		
31	24813302	1	Gear R. 2 TM 93		
31	24814302	1	Gear R. 2,4 TM 93		
31	24812302	1	Gear R. 1,5 TM 93		
32	24810312	1	SNAP Ring		
33	24810313	1	Ring		
34	24810314	1	Grommet		
35	24810315	10	Disk		
36	24810316	9	Disk		
37	24810317	1	BushING		
38	24870118	1	THRUST RACE		
39	24810309	1	Roller		
40	24870318	1	THRUST RACE		
41	24810322	1	Spring		
42	24810323	1	Washer		
43	24810324	1	Piston		
44	24810325	1	Washer		
45	24810328	2	Washer		
46	24810326	1	Plug		
47	24810101	1	Input Shaft		
48	24810330	1	Bell		
49	24810329	1	KEY		
50	24810334	1	Plug		
51	24870206	1	Bearing		

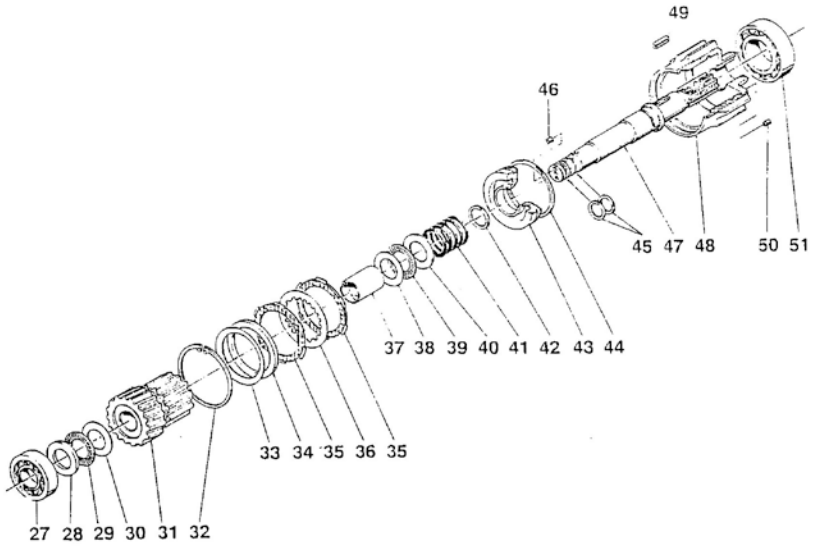

[NP] Not provided

Gearbox TM-93A

D_5031_4			Output Shaft 4/4		
FIG.	REF.	QTY	DESCR.	FROM	UPTO
52	24810206	1	Conical Roller Bearing 32208		
53/55	24814201AC	1	Gear+Output Shaft Kit		
53/55	24812201AC	1	Gear+Output Shaft Kit		
53/55	24813201AC	1	Gear+Output Shaft Kit		
54	24810209	1	O-Ring D. 38X3,5		
57	24810212	1	Bearing		

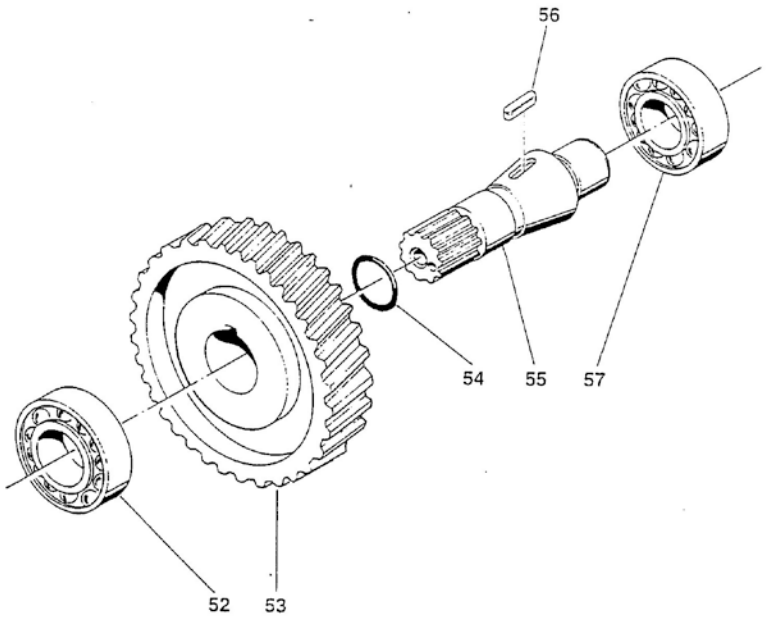

Gearbox TM-93A

	D_5030_5		Maintenance Kit		
FIG.	**REF.**	**QTY**	**DESCR.**	**FROM**	**UPTO**
1	24810401	1	Kit Gasket		
2	A0105000	1	15W40 Sole Diesel Oil 5L		
3	24810403	2	Clutch Plate Kit		

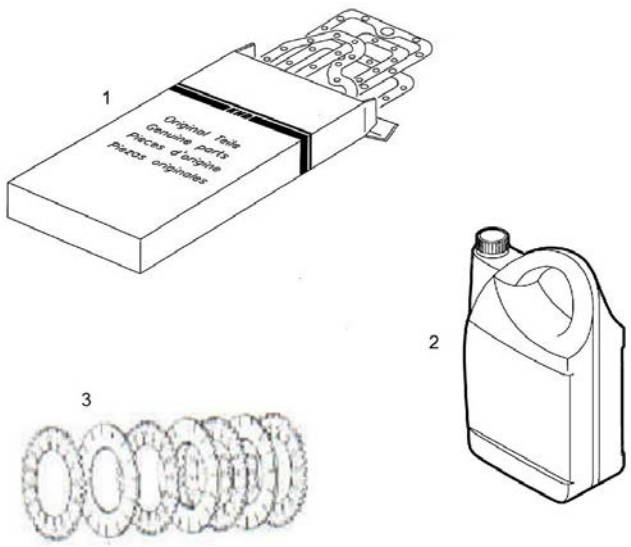

Gearbox TMC-260

	D_5032_1		Sheet 1/3		
FIG.	**REF.**	**QTY**	**DESCR.**	**FROM**	**UPTO**
1	24830011	1	Plug		
2	24890008	1	Gauge Oil Level		
3	56000083	1	Washer 21-26-1,5		
4	24890001	1	Cover		
5	24810065	1	Plug		
6	24810063	2	Plane Washer		
7	24890102	1	Cover		
8	24850212	1	Conical Roller Bearing 30207A		
9A	24895101	1	Input Shaft		
9B	24894101	1	Input Shaft		
9C	24893101	1	Input Shaft		
9D	24892101	1	Input Shaft		
10	24810103	1	Oil Grommet		
11	25710104	3	Conical Roller Bearing 32206-J2/Q		
12	24880222	1	Nut		
13	24880201	1	Shaft Output		
14	24880217	2	Shim		
15	24880204	2	Bearing, needle		
16	24880218	2	Shim		
17A	24894203	1	Gear		
17B	24892203	1	Gear		
18	52101261	9	Bolt DIN 931 M8-40 8.8		
19	24850093	17	Washer		
20	24860023	2	Pin		
21	24890302	1	Gear		
22	24890202	1	Clutch		
23	24890307	1	Nut		
24A	24894203	1	Gear		
24B	24895210	1	Gear		
24C	24894210	1	Gear		
24D	24893210	1	Gear		
25	24880205	2	CAGE		
26	24850011	1	Plug,oil drain		
33	52102258	1	Bolt DIN 933 M8-25 8.8		
46	24890205	1	Cover		

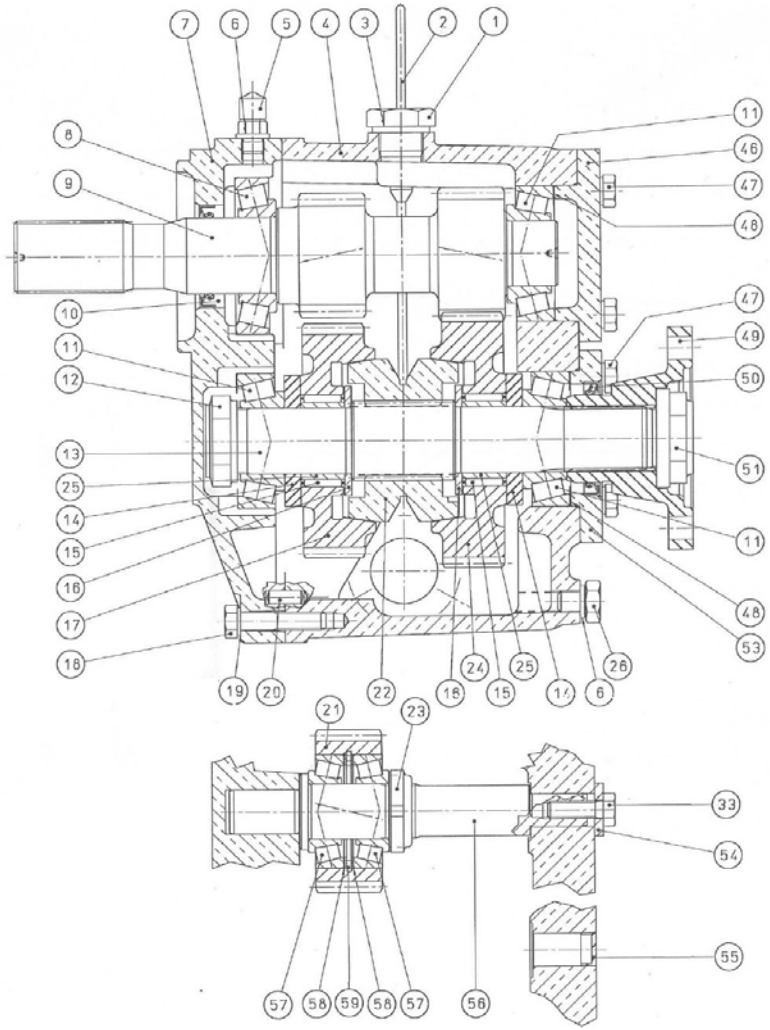

[NP] Not provided

Gearbox TMC-260

D_5032_1			Sheet 1/3		
FIG.	**REF.**	**QTY**	**DESCR.**	**FROM**	**UPTO**
47	52102259	8	Bolt DIN 933 M8-30 8.8		
48	24813500.67	6	Spacer		
49	24880224	1	Flange Output		
50	24890214	1	Oil Seal		
51	24850099	1	Nut		
53	24890208	1	Cover		
54	24890306	1	Washer		
55	24890305	1	Plug		
56	24890301	1	INTERMEDIATE Shaft		
57	24860207	2	Conical Roller Bearing 30205A		
58	24890304	2	Washer [NP]		
59	53041052	1	CIRClip DIN 472 I-52		

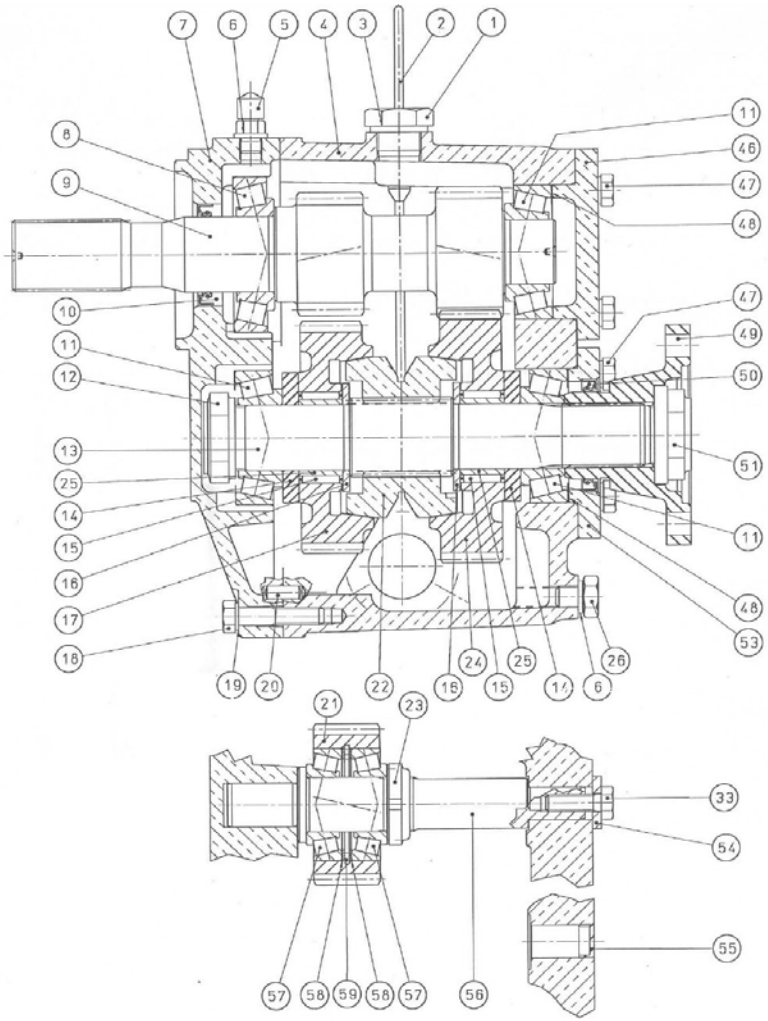

Gearbox TMC-260

D_5032_2			Sheet 2/3		
FIG.	REF.	QTY	DESCR.	FROM	UPTO
27	24890026	2	Cover		
28	53052210	1	Pin DIN 1481 3-20		
29	52102257	6	Bolt DIN 933 M8-20 8.8		
30	24880423	1	Pad		
31	24860417	1	O-Ring		
32	24860411	1	Spring		
33	52102258	1	Bolt DIN 933 M8-25 8.8		
34	52120008	2	Nut DIN 934 M8 8.8		
35	51123008	1	Nut DIN 985 M8 5.6		
36	52111260	1	ROD DIN 913 M8-35 8.8		
37	24860071	2	STUD		
38	53033008	2	Washer GROWER DIN 127-8		
39	51030008	2	Washer DIN 125-8		
40	24880402	1	Shaft		
41	24860404	1	Oil Seal		
42	24880401	1	Cover		
43	24810424	1	Lever		
44	24860419	1	Pin		
45	24850005	1	Plate, IDENTIFICATION		
52	53038006	6	Washer DIN 6798-A 6		

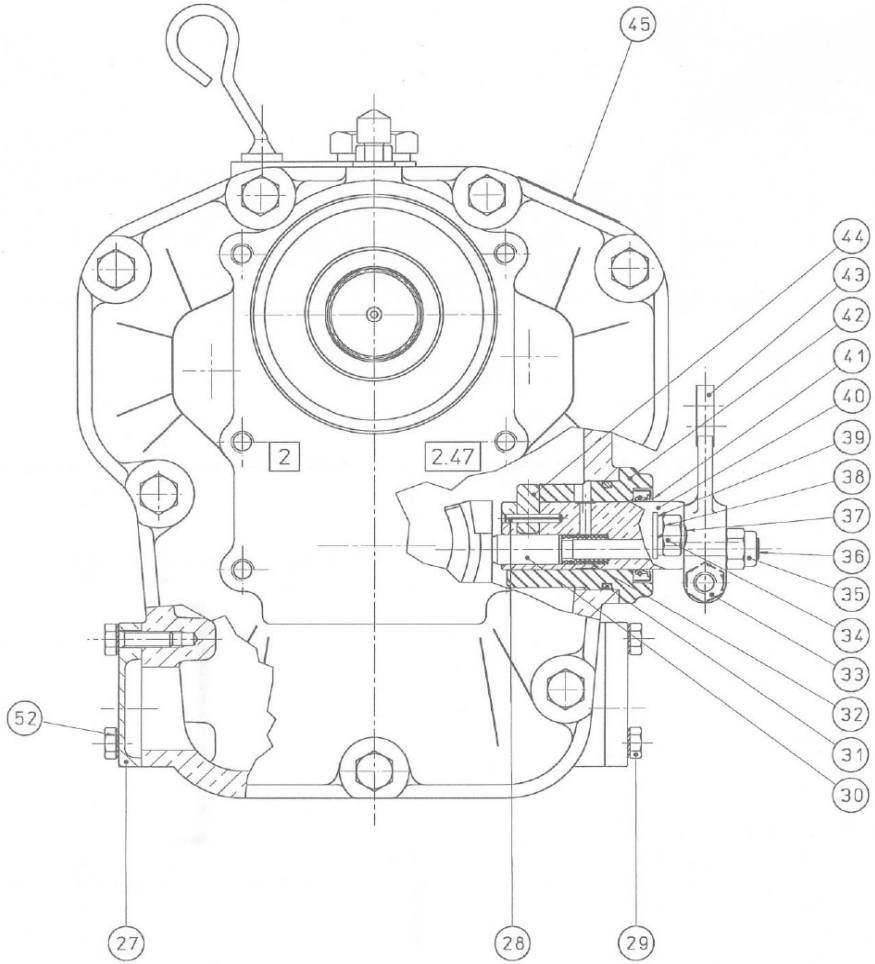

D_5032_3			Cooling System 3/3		
FIG.	REF.	QTY	DESCR.	FROM	UPTO
1	24890051	2	Cover		
2	24890052	2	O-Ring D. 32X2,5		
3	24890053	2	Elbow		
4	24890054	1	Cooler Pipe		

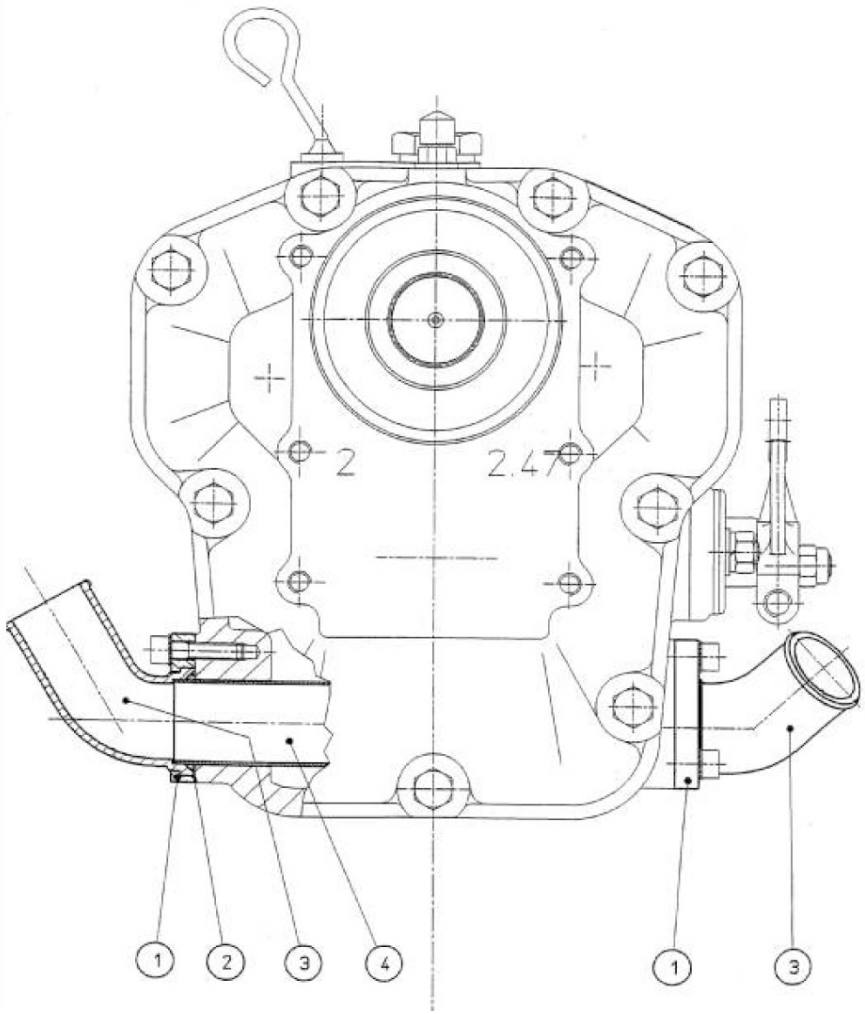

Gearbox TMC-260

	D_5032_4		Maintenance Kit		
FIG.	**REF.**	**QTY**	**DESCR.**	**FROM**	**UPTO**
1	24890401	1	Kit Gasket		
2	A0201000	2	ATF Sole Diesel Oil 1L		

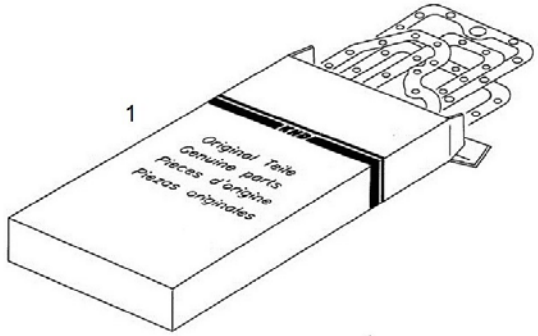

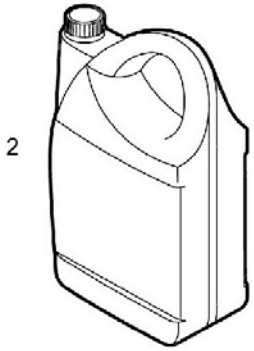

GearBox ZF-63 IV

D_50Z3_1			Sheet 1/2		
FIG.	REF.	QTY	DESCR.	FROM	UPTO
1	24640001	1	Housing		
2A	24640002	1	Breather valve		
2B	24642001	1	Hunger breather valve		
3	24610036	2	Plug		
4A	24640004	1	Output shaft seal		
4B	24642002	1	Output shaft seal		
5	24640005	1	Plug		
6A	24640006	1	Suction pipe		
6B	24640007	1	Suction pipe with support		
7	24640008	1	Retainer support		
8	24640009	1	Hex head screw		
9	24640010	1	Filter cover, assy.		
11	24640011	1	O-Ring		
12	24640012	1	O-Ring		
13	24610413	1	Washer		
14	24640014	1	Screw M8x30		
16	24613352	1	Filter Assy,oil		
19	24640018	1	Oilfilter		
20	24640019	1	Gasket		
21A	24640020	1	Oildipstick		
21B	24640021	1	Oildipstick + OR		
22	24640022	1	O-Ring		
23	24640023	1	Cover (housing)		
24	24640024	2	Locator pin		
25	24640025	4	Hex head screw		
26	24640026	16	Washer		
27	24640027	11	Hex head screw		
28	24640028	1	Hex head screw		
29	24640029	1	Input shaft seal		
30A	24640030	1	Output shaft seal		
30B	24642003	1	Output shaft seal		
31	24640031	1	Name plate		

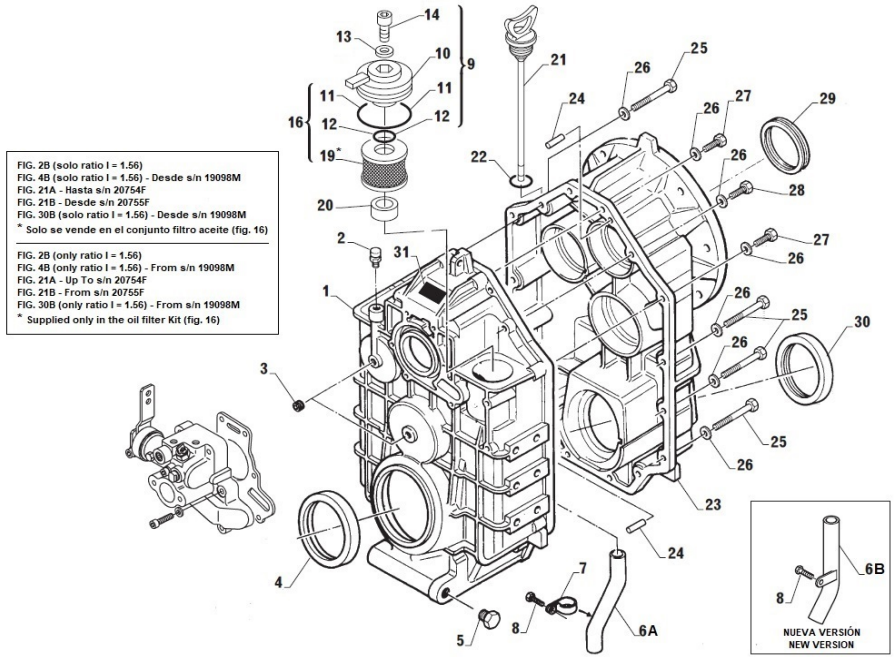

GearBox ZF-63 IV

	D_50Z3_2		Sheet 2/2		
FIG.	**REF.**	**QTY**	**DESCR.**	**FROM**	**UPTO**
1	24640034	1	Flange		
2	24640035	8	Screw		
3	24640201	4	Locator pin		
4	24640101	3	Piston ring		
5	24640102	1	Tapered roller bearing		
6	24640103	2	Butting ring		
7	24640104	1	Reverse gear Z3=49		
8	24640105	4	Needle bearing		
9	24640106	1	Key		
10	24640107	1	Input shaft, assy.		
11	24640108	2	Snap ring		
12	24640109	2	End disc		
13	24640110	10	Outer clutch disc		
14	24640111	8	Inner clutch disc		
15	24640112	2	Retainer ring		
16A	24640113	6	Cup spring		
16B	24640114	6	Cup spring		
17	24640115	2	Inner clutch piston ring		
18	24640116	2	Clutch piston		
19	24640117	2	Ball		
20	24640118	2	Outer clutch piston ring		
21	24640119	1	Input shaft and clutch housing		
22	24640120	2	Tapered roller bearing		
23A	24640121	2	Shim 0.1 mm		
23B	24640122	2	Shim 0.15 mm		
23C	24640301	2	Shim 0.2 mm		
23D	24640302	2	Shim 0.5 mm		
24	24640303	1	Tapered roller bearing		
25	24640304	1	Tapered roller bearing		
27	24640306	1	Tapered roller bearing		
28A	24640307	2	Shim 0.1 mm		
28B	24640308	2	Shim 0.15 mm		
28C	24640309	2	Shim 0.3 mm		
28D	24640310	2	Shim 0.5 mm		
29	24640202	1	Tapered roller bearing		

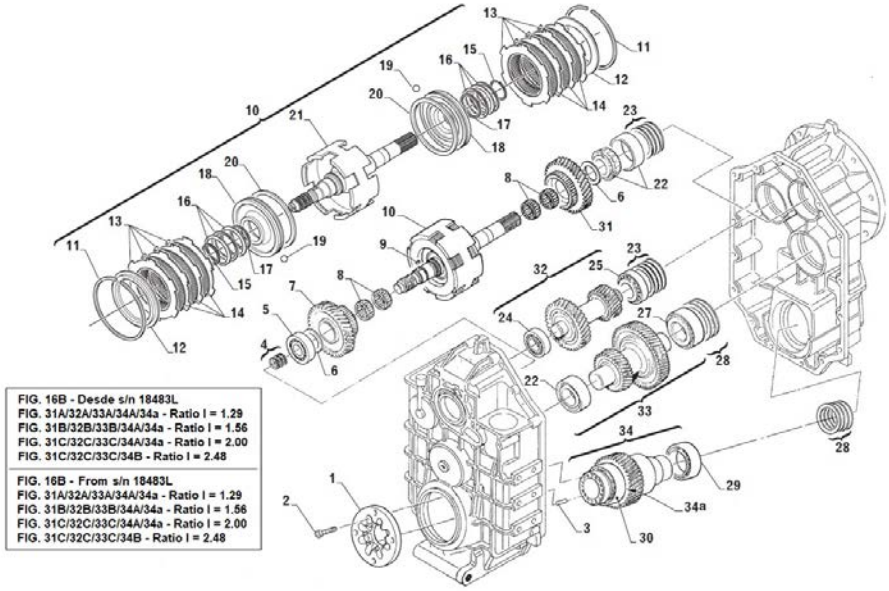

GearBox ZF-63 IV

D_50Z3_2			Sheet 2/2		
FIG.	**REF.**	**QTY**	**DESCR.**	**FROM**	**UPTO**
30	24640203	1	Tapered roller bearing		
31A	24642104	1	Forward gear Z1=39		
31B	24642105	1	Forward gear Z1=35		
31C	24643101	1	Forward gear Z1=30		
32A	24642306	1	Intermediate shaft Z4=45, Z5=36		
32B	24642307	1	Intermediate shaft Z4=45, Z5=32		
32C	24643302	1	Intermediate shaft Z4=45, Z5=27		
33A	24642308	1	Intermediate shaft Z2=49, Z6=33		
33B	24642309	1	Intermediate shaft Z2=53, Z6=33		
33C	24643303	1	Intermediate shaft Z2=58, Z6=33		
33D	24644303	1	Intermediate shaft Z2=58, Z6=32		
34a	24642212	1	Spacer		
34A	24642210	1	Output shaft Z7=34		
34B	24644204	1	Output shaft Z7=41		

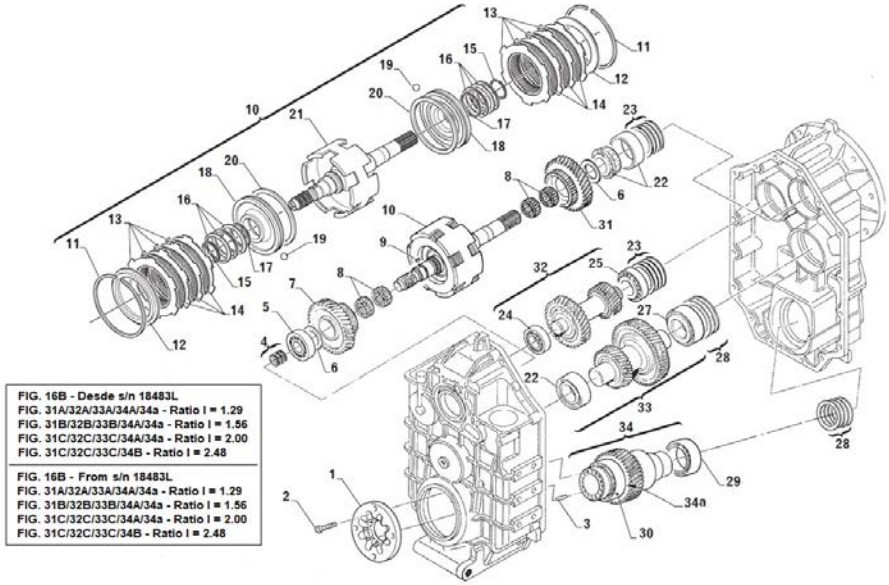

D_50Z3_3			Mechanical Selector Valve		
FIG.	REF.	QTY	DESCR.	FROM	UPTO
1A	24640401	1	Control Valve Assy. 23 Bar		
3	24640403	1	Gasket		
4	24640404	1	Lever		
5	24610404	7	Cap Screw M8X40		
6	24610033	8	Spring Washer		
7	24610041	1	Hex Nut		
8	24640408	1	Gasket		
9	24640409	1	Stop Screw		
10	24640410	1	Screw Plug		
11	24640411	1	Dummy Plug		
12	24640412	1	Screw Plug M10X1		
13	24640413	3	Washer		
14	24640414	1	Guide Bolt		
15	24640415	1	Spring		
16	24640416	2	Ball		
17	24640417	1	Neutral Safety Switch Assy.		
18	24640418	1	O-Ring		
19	24640419	1	Bushing		
20	24640420	1	Snap Ring		
21	24640421	1	Bushing		
22	24640422	1	Spring		
23	24640423	1	Ball		
24	24640424	1	Spacer		

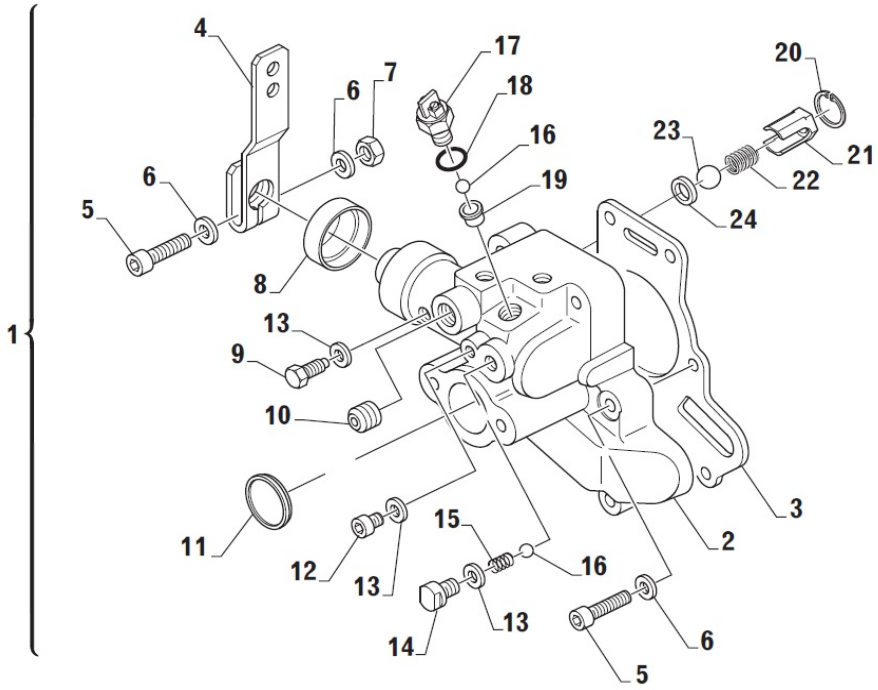

D_50Z3_4			Electric Selector Valve 12V/24V		
FIG.	REF.	QTY	DESCR.	FROM	UPTO
1A	24640501	1	Electr. Selector Valve On/Off 26 Bar 12V		
1B	24640502	1	Electr. Selector Valve On/Off 26 Bar 24V		
2A	24640503	2	Solenoid Valve On/Off 12V, 26 Bar		
2B	24640504	2	Solenoid Valve On/Off 24V, 26 Bar		
3	24640411	1	Dummy Plug		
4	24640412	1	Screw Plug M10X1		
5	24640413	1	Washer		
6	24640410	1	Screw Plug		
7	24640509	2	Cap Screw M8X65		
8	24610404	4	Cap Screw M8X40		
9	24610033	6	Spring Washer		
10	24640512	2	Connector Kit		
11	24640403	1	Gasket		

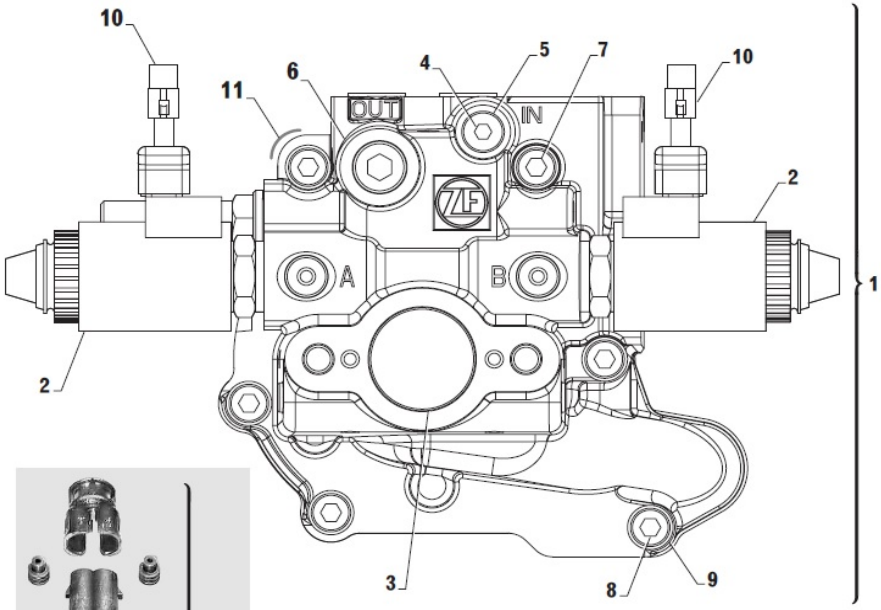

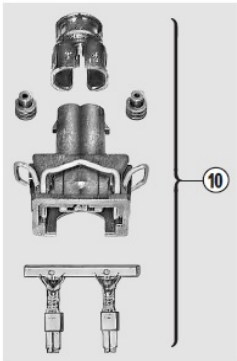

FIG. 2A/2A - Ma = 20 Nm
FIG. 4 - Ma = 12 Nm
FIG. 6 - Ma = 35 Nm
FIG. 12A/12B - 27 Nm

GearBox ZF-63 IV

D_50Z3_5			Electric Selector Valve 12V/24V (TV)		
FIG.	REF.	QTY	DESCR.	FROM	UPTO
1A	24640514	1	Elec. Selec. Valve On/Off 12V 26 Bar TV		
1B	24640515	1	Elec. Selec. Valve On/Off 24V 26 Bar TV		
2A	24640503	2	Solenoid Valve On/Off 12V, 26 Bar		
2B	24640504	2	Solenoid Valve On/Off 24V, 26 Bar		
3	24640411	1	Dummy Plug		
4	24640412	1	Screw Plug M10X1		
5	24640413	1	Washer		
6	24640410	1	Screw Plug		
7	24640509	2	Cap Screw M8X65		
8	24610404	4	Cap Screw M8X40		
9	24610033	6	Spring Washer		
10	24640512	3	Connector Kit		
11	24640526	1	Trolling Device		
12A	24640527	1	Proportional Valve 12V		
12B	24640528	1	Proportional Valve 24V		
13	24640403	1	Gasket		

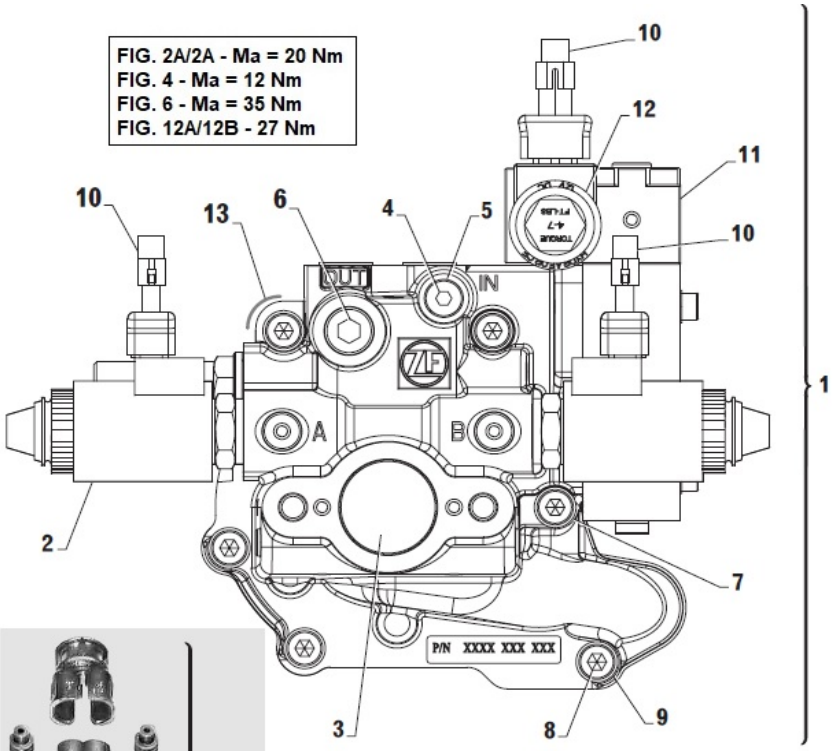

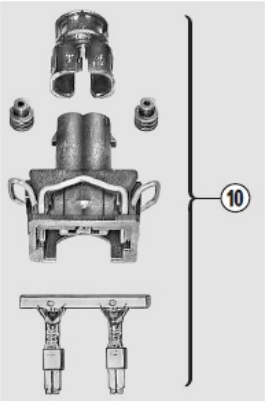

Kit Gearbox

17410110.1			Kit Z-Drive VOLVO 280/290 Z=26		
FIG.	REF.	QTY	DESCR.	FROM	UPTO
1	16510170	1	Flexible Coupling Type C SAE 11"1/2		
2	53038010	8	Washer DIN 6798-A 10		
3	52103308	8	Bolt DIN 912 M10-25 8.8		
4	14910012	1	Bell,housing reverser		
5	53033010	12	Washer GROWER DIN 127-10		
6	52102309	12	Bolt DIN 933 M10-30 8.8		
7	17410110.1R	1	Kit Z-Drive Volvo 280/290 Z=26		
8	53038012	6	Washer DIN 6798-A 12		
9	52301309	6	Bolt DIN 931 W7/16-30 8.8		
NS	M87503040	1	Water Intake Hose (HQ) D. 30-38 [NS]		
NS	14711030	1	Hose [NS]		
NS	14711031	1	Hose [NS]		
NS	54082025	2	Clamp DIN 3017 25-40/12 W4 [NS]		
NS	58088281	1	Pastic Cable Zip Tie [NS]		

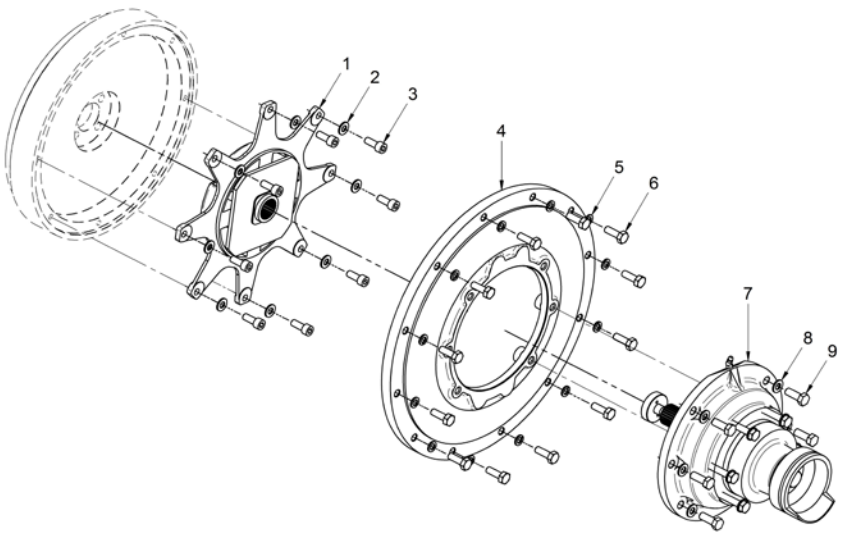

[NS] Not shown

Kit Gearbox

17410110.2			Kit Z-Drive Volvo 280/290 Z=10		
FIG.	REF.	QTY	DESCR.	FROM	UPTO
1	16510170	1	Flexible Coupling Type C SAE 11"1/2		
2	53038010	8	Washer DIN 6798-A 10		
3	52103308	8	Bolt DIN 912 M10-25 8.8		
4	14910012	1	Bell,housing reverser		
5	53033010	12	Washer GROWER DIN 127-10		
6	52102309	12	Bolt DIN 933 M10-30 8.8		
7	17410110.2R	1	Kit Z-Drive Volvo 280/290 Z=10		
8	53038012	6	Washer DIN 6798-A 12		
9	52301309	6	Bolt DIN 931 W7/16-30 8.8		
NS	M87503040	1	Water Intake Hose (HQ) D. 30-38 [NS]		
NS	14711030	1	Hose [NS]		
NS	14711031	1	Hose [NS]		
NS	54082025	2	Clamp DIN 3017 25-40/12 W4 [NS]		
NS	58088281	1	Pastic Cable Zip Tie [NS]		

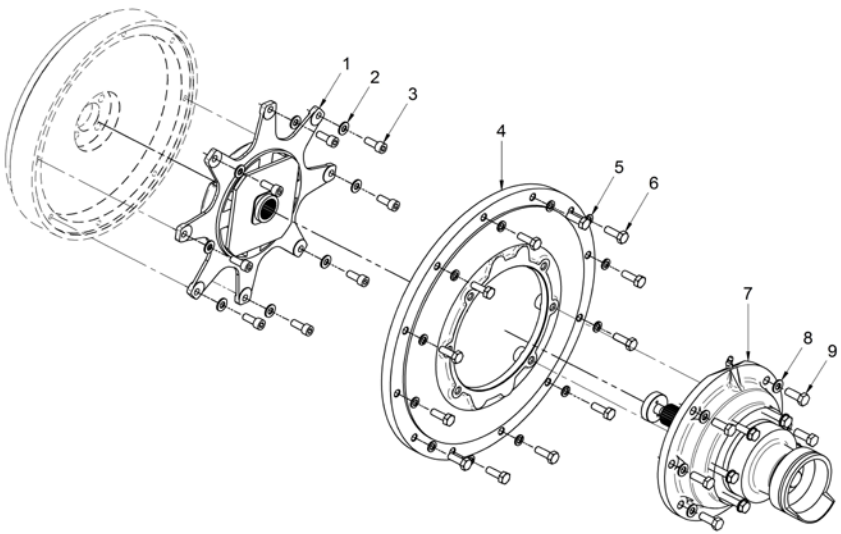

[NS] Not shown

Kit Gearbox

	17410200		Kit GearBox TM-93		
FIG.	**REF.**	**QTY**	**DESCR.**	**FROM**	**UPTO**
1	16510170	1	Flexible Coupling Type C SAE 11"1/2		
2	53038010	8	Washer DIN 6798-A 10		
3	52103308	8	Bolt DIN 912 M10-25 8.8		
5	53033010	14	Washer GROWER DIN 127-10		
6	24810021	1	SAE3 Housing TM-93 and 170		
7	52102309	12	Bolt DIN 933 M10-30 8.8		
8	52102306	1	Bolt DIN 933 M10-15 8.8	06/06/2007	
9	56000061	1	Washer 10-16-1,5		
10	ALLPA.93	1	Coupling,cable	23/05/2017	
10	14719115	1	Coupling,cable		23/05/2017
11	51030006	4	Washer DIN 125-6		
12	51051107	1	Pin DIN-94 1,6-16		
13	52102256	2	Bolt DIN 933 M8-15 8.8		
14	53033008	6	Washer GROWER DIN 127-8		
15	51030008	6	Washer DIN 125-8		
16	18619020	1	Bracket,Gear box control		
17	51030005	2	Washer DIN 125-5		
18	24810913	1	Clamp,CABLE		
19	51030010	2	Washer DIN 125-10		
20	52120010	2	Nut DIN 934 M10 8.8		
21	52102257	4	Bolt DIN 933 M8-20 8.8		
22	13912041	1	Bracket,TM Oil Cooler		
23	14712015	2	Bolt,Coupling pipe oil		
24	57000375	4	Washer 17-22-1,5		
25	54082025	4	Clamp DIN 3017 25-40/12 W4		
26	17411022	1	Rubber Elbow		
27	18011026	1	Pipe		
28	15312007	2	Water Cooler Cover		
29	54082050	2	Clamp DIN 3017 50-70/12 W4		
30	14712051	1	Cooler,oil		
31	52120008	4	Nut DIN 934 M8 8.8		
34	59072604	2	Clamp	29/03/2014	
NS	17112024	2	Pipe, rev.oil Cooler [NS]		

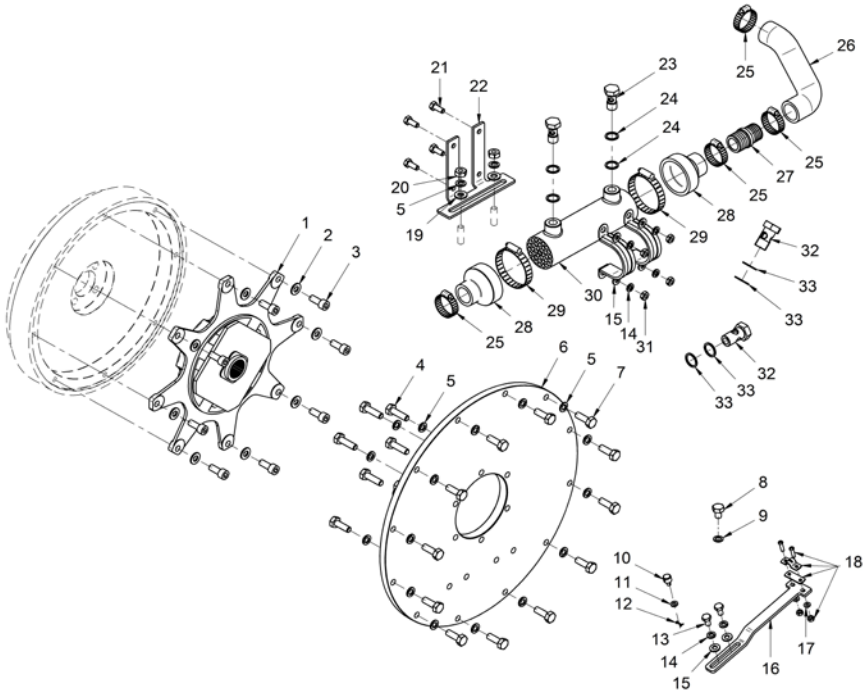

[NS] Not shown

Kit Gearbox

	17410210		Kit GearBox TM-345/A		
FIG.	REF.	QTY	DESCR.	FROM	UPTO
1	17410022	1	Flywheel Supplement		
2	16510170	1	Flexible Coupling Type C SAE 11"1/2		
3	53038010	8	Washer DIN 6798-A 10		
4	52101312	8	Bolt DIN 931 M10-45 8.8		
5	14910012	1	Bell,housing reverser		
6	53033010	12	Washer GROWER DIN 127-10		
7	52101310	12	Bolt DIN 931 M10-35 8.8		
8	53038012	5	Washer DIN 6798-A 12		
9	52302307	5	Bolt DIN 933 W7/16-20 8.8		
10	24810913	1	Clamp,CABLE		
11	51030005	2	Washer DIN 125-5		
12	18619020	1	Bracket,Gear box control		
13	ALLPA.93	1	Coupling,cable	23/05/2017	
13	14719115	1	Coupling,cable		23/05/2017
14	51030008	6	Washer DIN 125-8		
15	51051107	1	Pin DIN-94 1,6-16		
16	17511009	1	Hose		
17	53033008	8	Washer GROWER DIN 127-8		
18	52102256	2	Bolt DIN 933 M8-15 8.8		
19	54082025	4	Clamp DIN 3017 25-40/12 W4		
20	15312007	2	Water Cooler Cover		
21	54082050	2	Clamp DIN 3017 50-70/12 W4		
22	18012041	1	Bracket,TM93/170 oil cooler		
23	52102257	4	Bolt DIN 933 M8-20 8.8		
24	52120008	6	Nut DIN 934 M8 8.8		
25	51031008	2	Washer DIN 9021 8		
26	14712015	2	Bolt,Coupling pipe oil		
27	57000375	4	Washer 17-22-1,5		
29	18011026	1	Pipe		
30	14712051	1	Cooler,oil		
31	12120018	2	Stud		
32	59072604	2	Clamp	29/03/2014	
33	17012024	2	Pipe		
NS	51030006	3	Washer DIN 125-6 [NS]		

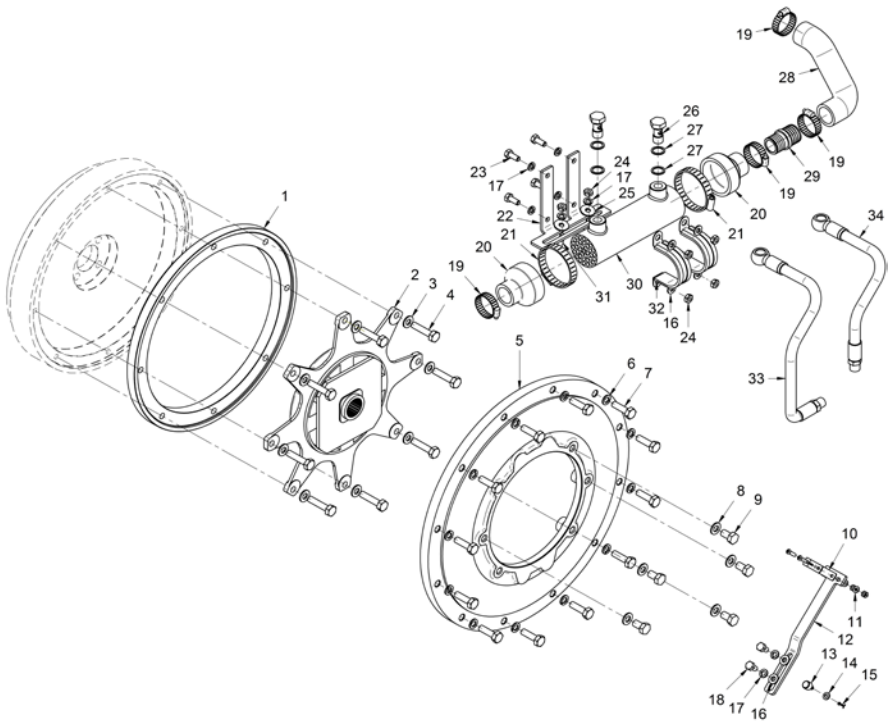

[NS] Not shown

Kit Gearbox

	17410215		Kit GearBox TM-170/A/880A		
FIG.	REF.	QTY	DESCR.	FROM	UPTO
1	16510170	1	Flexible Coupling Type C SAE 11"1/2		
2	53038010	8	Washer DIN 6798-A 10		
3	52103308	8	Bolt DIN 912 M10-25 8.8		
4	24810021	1	SAE3 Housing TM-93 and 170		
5	53033010	14	Washer GROWER DIN 127-10		
6	52102309	12	Bolt DIN 933 M10-30 8.8		
7	52102306	1	Bolt DIN 933 M10-15 8.8	06/06/2007	
8	56000061	1	Washer 10-16-1,5		
9	24810913	1	Clamp,CABLE		
10	51030005	2	Washer DIN 125-5		
11	18619020	1	Bracket,Gear box control		
12	51051107	1	Pin DIN-94 1,6-16		
14	ALLPA.93	1	Coupling,cable	23/05/2017	
14	14719115	1	Coupling,cable		23/05/2017
15	51030008	6	Washer DIN 125-8		
16	53033008	6	Washer GROWER DIN 127-8		
17	52120008	6	Nut DIN 934 M8 8.8		
18	17511009	1	Hose		
19	54082025	4	Clamp DIN 3017 25-40/12 W4		
20	15312007	2	Water Cooler Cover		
21	54082050	2	Clamp DIN 3017 50-70/12 W4		
22	14712051	1	Cooler,oil		
23	52120010	2	Nut DIN 934 M10 8.8		
24	51030010	2	Washer DIN 125-10		
25	13912041	1	Bracket,TM Oil Cooler	26/06/2017	
25	18012041	1	Bracket,TM93/170 oil cooler		25/06/2017
26	52102257	4	Bolt DIN 933 M8-20 8.8		
27	18011026	1	Pipe		
28	57000375	4	Washer 17-22-1,5		
29	14712015	2	Bolt,Coupling pipe oil		
30	59072604	2	Clamp	29/03/2014	
31	17112024	1	Pipe, rev.oil Cooler		
32	19412017	1	Pipe,rev.oil cooler	26/06/2017	
NS	51030006	3	Washer DIN 125-6 [NS]	23/05/2017	

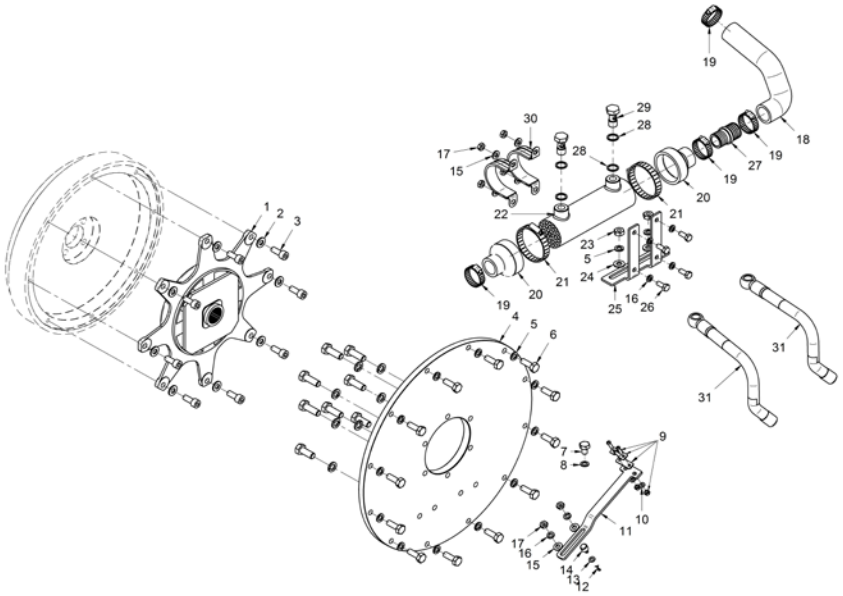

[NS] Not shown

Kit Gearbox

17410220			Kit GearBox BORG WARNER With Oil Cooler		
FIG.	**REF.**	**QTY**	**DESCR.**	**FROM**	**UPTO**
1	16510170	1	Flexible Coupling Type C SAE 11"1/2		
2	53038010	8	Washer DIN 6798-A 10		
3	52103308	8	Bolt DIN 912 M10-25 8.8		
4	14910012	1	Bell,housing reverser		
5	53033010	12	Washer GROWER DIN 127-10		
6	52102310	12	Bolt DIN 933 M10-35 8.8		
7	53033011	8	Washer GROWER DIN 127-11		
8	52301323	6	Bolt DIN 931 W7/16-100 8.8		
9	17112019	1	Bracket,Cooler Oil		
10	52302309	2	Bolt DIN 933 W7/16-30 8.8		
11	51083060	2	Clamp "P" 59-63		
12	14712032	1	Coupling,ball pipe oil		
13	57000375	6	Washer 17-22-1,5		
14	14712035	3	Collar, Union		
15	14712031	4	Retainer		
16	M84501019	1	LOW Pressure Hose D. 10-19	23/10/2008	
17	14712015	3	Bolt,Coupling pipe oil		
18	54082050	2	Clamp DIN 3017 50-70/12 W4		
19	15312007	2	Water Cooler Cover		
20	54082025	4	Clamp DIN 3017 25-40/12 W4		
21	15212022	1	Elbow	15/02/2017	
22	14712051	1	Cooler,oil		
23	18011026	1	Pipe		
24	13211036	1	Pipe 30-40-100		
25	19211011	1	Pipe,water inlet		

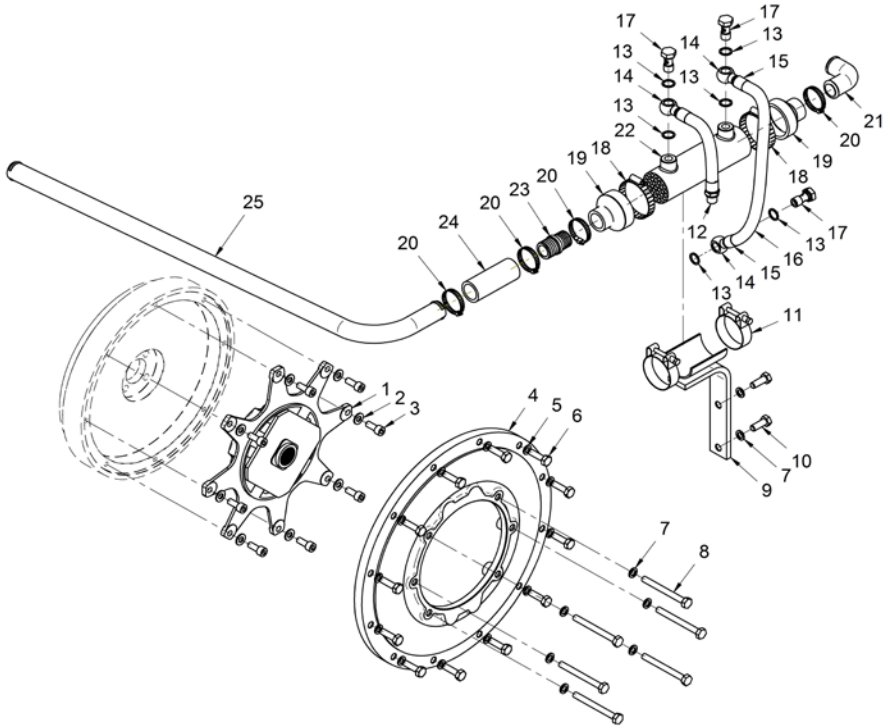

Kit Gearbox

17410221			Kit GearBox BW (Without Oil Cooler)		
FIG.	REF.	QTY	DESCR.	FROM	UPTO
1	16510170	1	Flexible Coupling Type C SAE 11"1/2		
2	53038010	8	Washer DIN 6798-A 10		
3	52103308	8	Bolt DIN 912 M10-25 8.8		
4	14910012	1	Bell,housing reverser		
5	53033010	12	Washer GROWER DIN 127-10		
6	52102310	12	Bolt DIN 933 M10-35 8.8		
7	16510004	1	Spacer,bell housing		26/07/2017
8	53038012	6	Washer DIN 6798-A 12		
9	52301323	6	Bolt DIN 931 W7/16-100 8.8		
NS	M87503040	1	Water Intake Hose (HQ) D. 30-38 [NS]		
NS	17411034	1	Hose [NS]		
NS	54082025	2	Clamp DIN 3017 25-40/12 W4 [NS]		
NS	60180007	1	Outlet Coupling [NS]	20/02/2014	

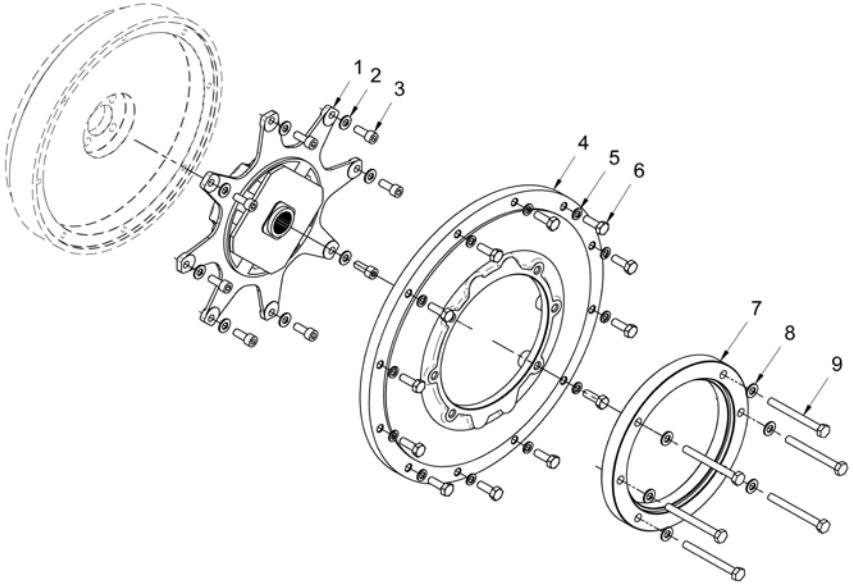

[NS] Not shown

Kit Gearbox

	17410223		Kit GearBox ZF-63IV		
FIG.	**REF.**	**QTY**	**DESCR.**	**FROM**	**UPTO**
1	16510170	1	Flexible Coupling Type C SAE 11"1/2		
2	53038010	8	Washer DIN 6798-A 10		
3	52103312	8	Bolt DIN 912 M10-45 8.8		
4	14910012	1	Bell,housing reverser		
5	53033010	16	Washer GROWER DIN 127-10		
6	52102309	12	Bolt DIN 933 M10-30 8.8		
7	53038012	6	Washer DIN 6798-A 12		
8	52301311	5	Bolt DIN 931 W7/16-40 8.8		17/07/2017
8	52302310	5	Bolt DIN 933 W7/16-35 8.8	18/07/2017	
9	ALLPA.93	1	Coupling,cable	23/05/2017	
9	14719115	1	Coupling,cable		23/05/2017
10	51030006	6	Washer DIN 125-6		
11	51051107	1	Pin DIN-94 1,6-16		
12	52102157	2	Bolt DIN 933 M6-20 8.8		
13	55307104	2	Bolt DIN 86 W3/16-10		
14	14719013	1	Clamp,cable		
15	12119021	1	SUPORT Clamp		
16	16519020	1	Bracket, Gear box control		
17	53033006	2	Washer GROWER DIN 127-6		
18	52120006	2	Nut DIN 934 M6 8.8		
19	52320716	1	Nut DIN 934 W 7/16 8.8		
20	17510004	1	Stud 7/16Wx44		
21	54082025	4	Clamp DIN 3017 25-40/12 W4		
22	15312007	2	Water Cooler Cover		
23	54082050	2	Clamp DIN 3017 50-70/12 W4		
24	57000375	4	Washer 17-22-1,5		
25	17017102	2	Spacer 10,5X22X46		
26	14712015	2	Bolt,Coupling pipe oil		
27	16512010	1	Bracket,oil cooler		
28	17511009	1	Hose		
29	18011026	1	Pipe		
30	14712051	1	Cooler,oil		
31	51083060	1	Clamp "P" 59-63		
32	18512024	2	Pipe		
33	17410022	1	Flywheel Supplement		

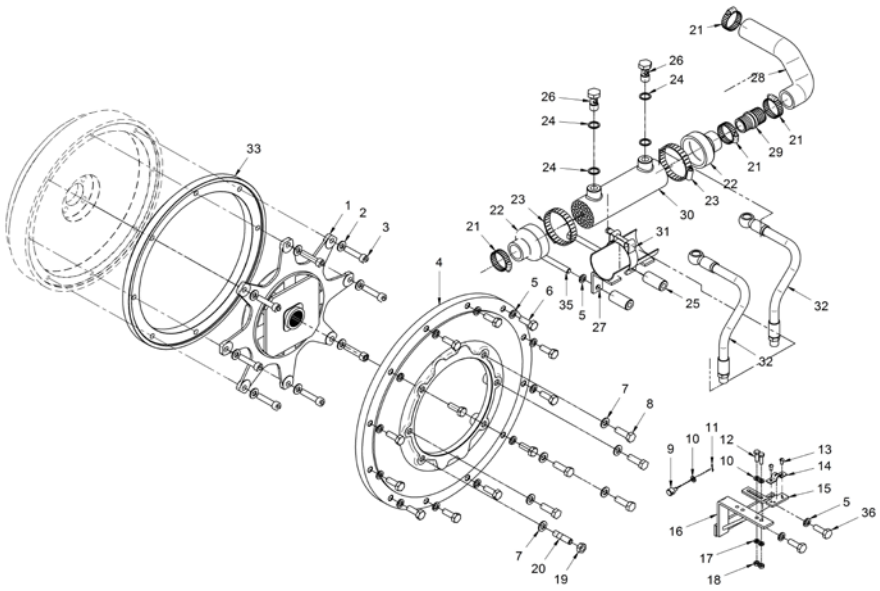

Kit Gearbox

	17410223		Kit GearBox ZF-63IV		
FIG.	**REF.**	**QTY**	**DESCR.**	**FROM**	**UPTO**
35	52101319	2	Bolt DIN 931 M10-80 8.8		
36	52302258	2	Bolt DIN 933 W3/8-25 8.8		

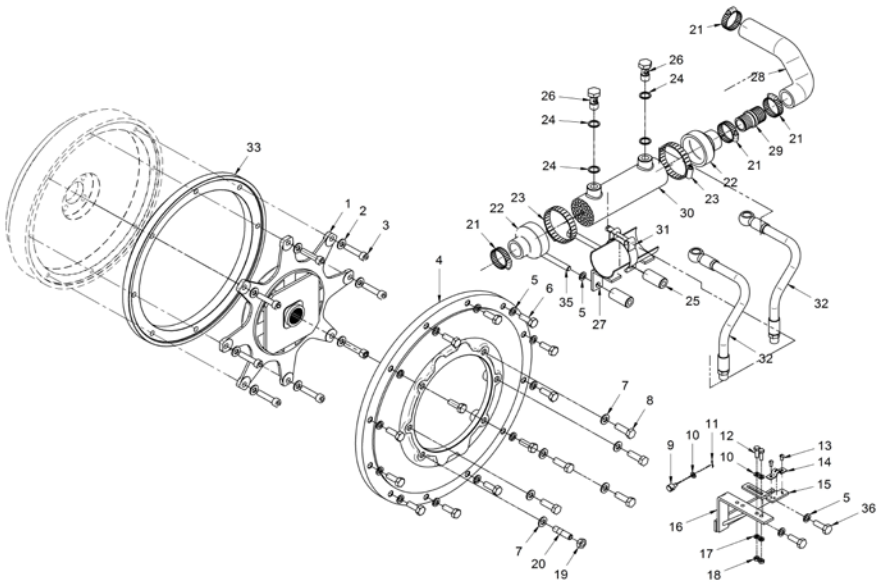

Kit Gearbox

17410226			PRM-160 SAE7 Coupling Housing Kit		
FIG.	**REF.**	**QTY**	**DESCR.**	**FROM**	**UPTO**
1	16510172	1	Flexible Coupling T. C SAE 11"1/2 PRM160		
2	53038010	8	Washer DIN 6798-A 10		
3	52102308	8	Bolt DIN 933 M10-25 8.8		
4	14910012	1	Bell,housing reverser		
5	53033010	12	Washer GROWER DIN 127-10		
6	52102309	12	Bolt DIN 933 M10-30 8.8		

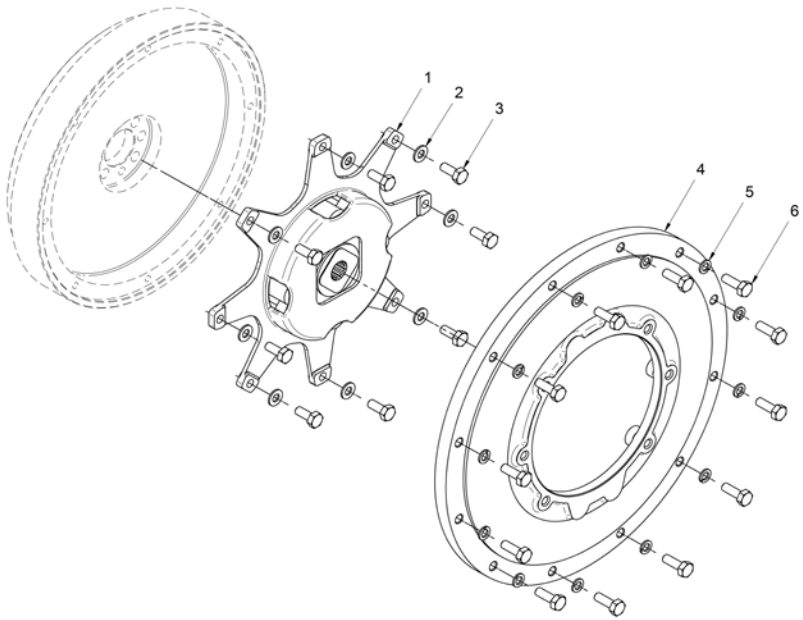

Kit Gearbox

	17410227		Kit GearBox TMC-260		
FIG.	REF.	QTY	DESCR.	FROM	UPTO
1	16510170	1	Flexible Coupling Type C SAE 11"1/2		
2	53038010	8	Washer DIN 6798-A 10		
3	52102308	8	Bolt DIN 933 M10-25 8.8		
4	52101260	6	Bolt DIN 931 M8-35 8.8		
5	53033008	8	Washer GROWER DIN 127-8		
6	17410012	1	Adaptor Flange.		
7	53033010	12	Washer GROWER DIN 127-10		
8	52102309	12	Bolt DIN 933 M10-30 8.8		
9	54082025	2	Clamp DIN 3017 25-40/12 W4		
10	24890053	2	Elbow		
11	24890051	2	Cover		
12	24890052	2	O-Ring D. 32X2,5		
13	24890054	1	Cooler Pipe		
14	24880901	1	Bracket, GearBox Control		
15	51030005	2	Washer DIN 125-5		
16	24810913	1	Clamp,CABLE		
17	51030008	2	Washer DIN 125-8		
18	52102257	2	Bolt DIN 933 M8-20 8.8		
19	51051107	1	Pin DIN-94 1,6-16		
20	ALLPA.93	1	Coupling,cable	23/05/2017	
20	14719115	1	Coupling,cable		23/05/2017
21	51030006	5	Washer DIN 125-6		
22	13817011	1	Bracket		
23	59071452	2	Clamp 1 42/15 W1		
24	52120006	1	Nut DIN 934 M6 8.8		
25	53033006	1	Washer GROWER DIN 127-6		
26	52102157	1	Bolt DIN 933 M6-20 8.8		
27	51031006	1	Washer DIN 9021 6		
NS	M87503242	1	Water Intake Hose (HQ) D. 32-42 [NS]		
NS	52102106	1	Bolt DIN 933 M5-15 8.8 [NS]		

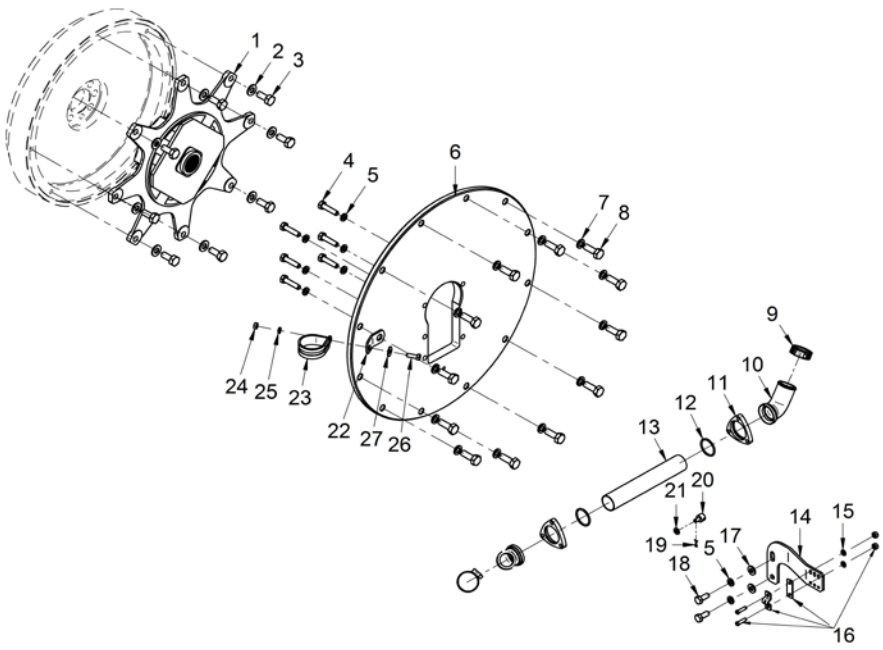

[NS] Not shown

Kit Gearbox

	17410228		Kit SAE 7		
FIG.	**REF.**	**QTY**	**DESCR.**	**FROM**	**UPTO**
1	14910012	1	Bell,housing reverser		
2	53033010	12	Washer GROWER DIN 127-10		
3	52102309	12	Bolt DIN 933 M10-30 8.8		

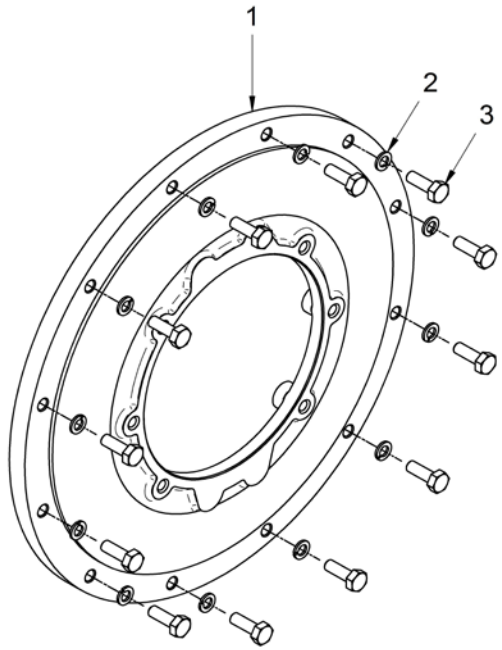

Kit Gearbox

17410230			Kit DONG-I DMT-25AL Gearbox		
FIG.	**REF.**	**QTY**	**DESCR.**	**FROM**	**UPTO**
1	53033010	20	Washer GROWER DIN 127-10		
2	52103308	8	Bolt DIN 912 M10-25 8.8		
3	52102309	12	Bolt DIN 933 M10-30 8.8		
4	54082025	4	Clamp DIN 3017 25-40/12 W4		
5	17411014	1	Pipe	10/04/2017	
6	60180007	2	Outlet Coupling		
7	13611038	1	Pipe 30-40-75	10/04/2017	

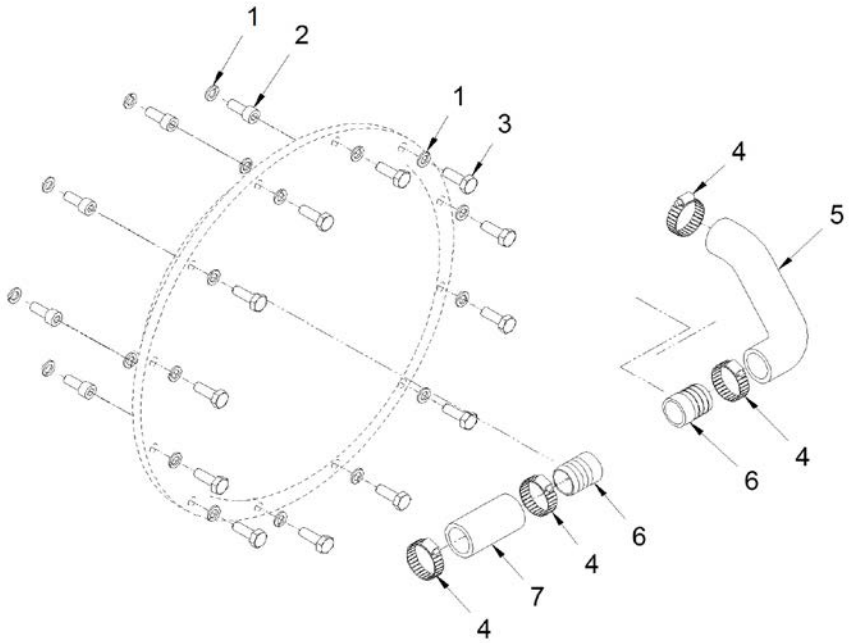

	17417093		Kit 2nd Alternator 28V/55A		
FIG.	REF.	QTY	DESCR.	FROM	UPTO
1	17410102	1	Pulley 4A D138 (S)		
2	17417027	1	Alt. 28V/55A Mahle	16/03/2016	
3	17417022	1	Pulley		
4	17417092	1	Bracket Alternator		
5	17117109	1	Belt Type SPAX 850	24/01/2017	
5	17417104	1	Belt Type SPAX 807		23/01/2017
6	51030010	1	Washer DIN 125-10		
7	51030012	2	Washer DIN 125-12		
8	52101376	1	Bolt DIN 931 M12-130 8.8		
9	52102309	1	Bolt DIN 933 M10-30 8.8		
10	52102361	4	Bolt DIN 933 M12-40 8.8		
11	52120010	1	Nut DIN 934 M10 8.8		
12	52120012	1	Nut DIN 934 M12 8.8		
13	53033012	1	Washer GROWER DIN 127-12		
14	17410001.1	1	Front Bracket		

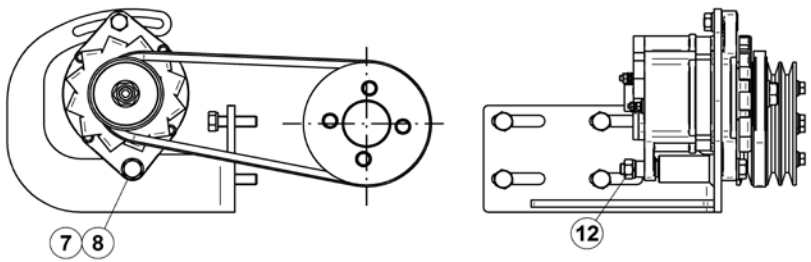

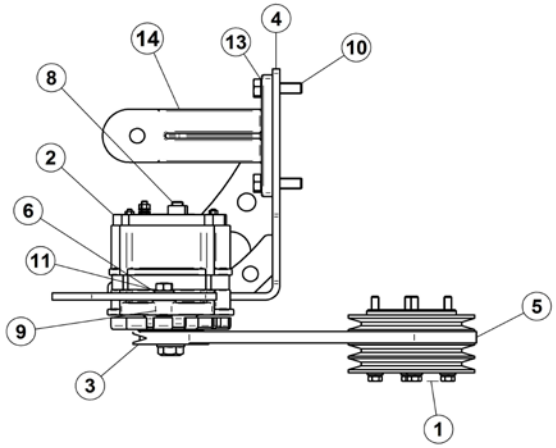

	17417097		Kit 2nd Alternator 14V/95A		
FIG.	**REF.**	**QTY**	**DESCR.**	**FROM**	**UPTO**
1	17410102	1	Pulley 4A D138 (S)		
2	17417098	1	Bracket Alternator		
3	53033012	4	Washer GROWER DIN 127-12		
4	52102362	4	Bolt DIN 933 M12-45 8.8		
5	17410001.1	1	Front Bracket		
6	51030010	1	Washer DIN 125-10		
7	52101325	1	Bolt DIN 931 M10-120 8.8		
8	51030008	2	Washer DIN 125-8		
9	52101261	1	Bolt DIN 931 M8-40 8.8		
10	53033008	1	Washer GROWER DIN 127-8		
11	52120008	1	Nut DIN 934 M8 8.8		
12	17417105	1	Belt Type XPA 882		
13	17117025	1	Alt. 14V/95A Mahle	13/04/2016	
14	17217005	1	Spacer 8,5X25X8,5		
15	17117016.7	1	Pulley		
16	17417025	1	Spacer 13.5x10.2x11	09/09/2015	

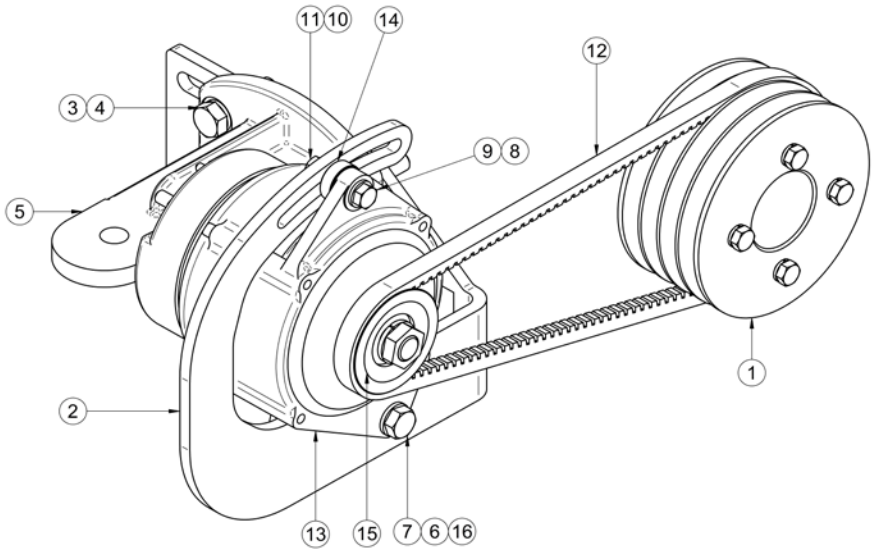

17417100			Kit 2nd Alternator 28V/140A		
FIG.	**REF.**	**QTY**	**DESCR.**	**FROM**	**UPTO**
1	17417101	1	Alternator, Bracket		
2	17110102	1	Pulley 2A (S)		
3	17417102	1	Alternator, Bracket		
4	17417106	1	Alt. 28V 140A Mahle	14/06/2016	
5	53033010	4	Washer GROWER DIN 127-10		
6	52101369	8	Bolt DIN 931 M12-80 8.8		
7	51030010	8	Washer DIN 125-10		
8	52120010	4	Nut DIN 934 M10 8.8		
9	52102310	4	Bolt DIN 933 M10-35 8.8		
10	53033012	3	Washer GROWER DIN 127-12		
12	51030012	3	Washer DIN 125-12		
13	52120012	3	Nut DIN 934 M12 8.8		
14	54102365	2	Bolt DIN 933 M 12-60 INOX		
15	52102360	1	Bolt DIN 933 M12-35 8.8		
16	52120014	2	Nut DIN 934 M14 8.8		
17	17417104	2	Belt Type SPAX 807		

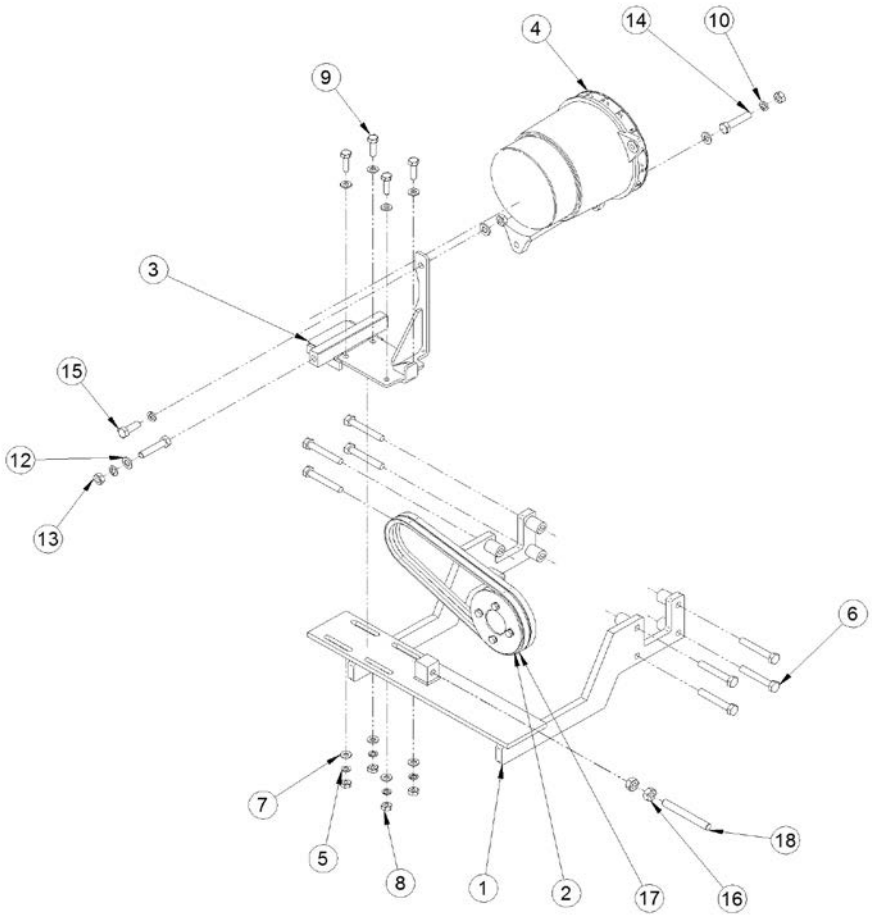

	17417200		Kit Wire Earth Isolated 12V		
FIG.	REF.	QTY	DESCR.	FROM	UPTO
1	60900999.1	2	Connection M14X1,5 5/8" EXA.19 L=25		
2	60900972	1	High Coolant, 2 Poles		
3	56000069	2	Washer 14-20-1,5		
4	56000073	2	Copper Washer 16-23-1,5		
5	60900982	1	Temperature SENDER		
6	17427007.1	1	Plate,Adjusting		
7	17117012	2	Tensor Bakelite Bushing		
9	17427002.1	1	Bracket, Alternator		
10	17117011	2	Bracket Bakelite Bushing		
11	60900978	1	Switch, Oil Press		
12	60900987	1	Sender, Oil Press.		
13	13019001	2	Clamp		
14	19017104	1	Relay 12 V. Bipolar		06/06/2016
14	19017113	1	Relay 12 V, Earth Isolated	06/06/2016	
15	51030006	4	Washer DIN 125-6		
16	52102154	2	Bolt DIN 933 M6-10 8.8	26/11/2005	
17	17417107	1	Support Relay,Plate		
18	52102153	2	Bolt DIN 933 M6-8 8.8	18/07/2007	
19	52102104	1	Bolt DIN 933 M5-10 8.8		
20	51030005	4	Washer DIN 125-5		
21	52102258	4	Bolt DIN 933 M8-25 8.8		
22	51030008	4	Washer DIN 125-8		
23	17417014	1	Washer		
24	17417013	1	Bakelite Bushing		
25	17425268.1	3	Nut		
26	17417015	3	Bakelite Bushing		
27	17417016	3	Washer		
NS	14419023	1	Ball JOINT [NS]		
NS	15119015	1	CABLE Holder Ball [NS]		
NS	52120006	1	Nut DIN 934 M6 8.8 [NS]		
NS	53033006	1	Washer GROWER DIN 127-6 [NS]		
NS	58088283	3	Pastic Cable Zip Tie [NS]	07/03/2017	
NS	60900152	1	Wire [NS]		
NS	60900157	1	Wire [NS]		
NS	60900158	2	Terminal Tubular Sleeve (1.5) [NS]	07/03/2017	

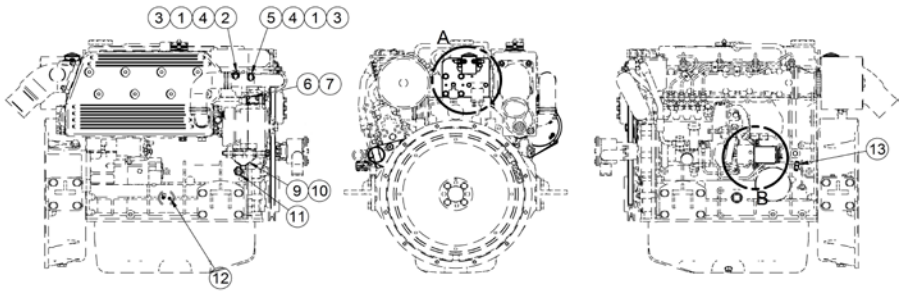

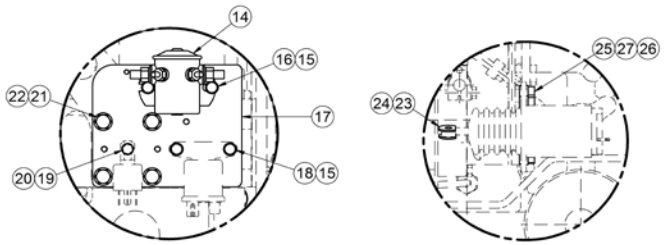

[NS] Not shown

	17417200		Kit Wire Earth Isolated 12V		
FIG.	**REF.**	**QTY**	**DESCR.**	**FROM**	**UPTO**
NS	60974201	1	Wiring Electrical Isolated MINI-74 SVT [NS]	13/04/2016	
NS	60974202R.2	1	MINI-74 Electrical Wiring ISKRA [NS]		13/04/2016
NS	60975048	1	MASS BLACK TO Wiring START [NS]		

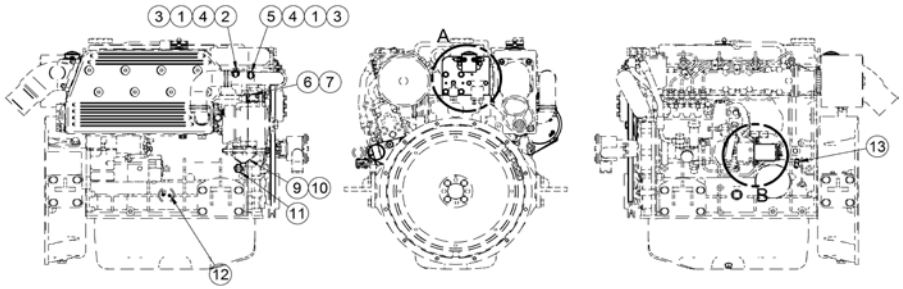

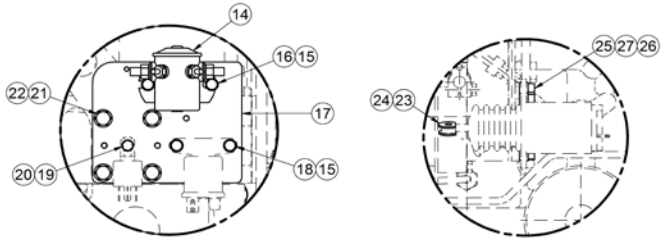

Electrical System

	17417208		Kit 24V Engine Electrical System		
FIG.	REF.	QTY	DESCR.	FROM	UPTO
2	17417024	1	Alternator 28V/55A		
3	17617006	1	Spacer 6,5X12X5		
4	51031008	1	Washer DIN 9021 8		
5	17117022	1	Pulley Alternator, Type A		
6	17521028	1	Belt Type AX 45 1175		
7	17417005	1	Relay 24V 24-100		
8	17417005.1	1	Relay 24V 24-22A		
9	17525264.2	1	Stop Solenoid 24V		
10	17527001.2	1	Starter Assy 24V		
11	17527017.2	4	Glow Plug 24V		
12	52101260	1	Bolt DIN 931 M8-35 8.8		
13	51030006	2	Washer DIN 125-6		
14	52102104	1	Bolt DIN 933 M5-10 8.8		
NS	52102156	1	Bolt DIN 933 M6-16 8.8 [NS]		
NS	60975130	1	SVT 30 MINI-74/SM-105/103 24V Panel [NS]		

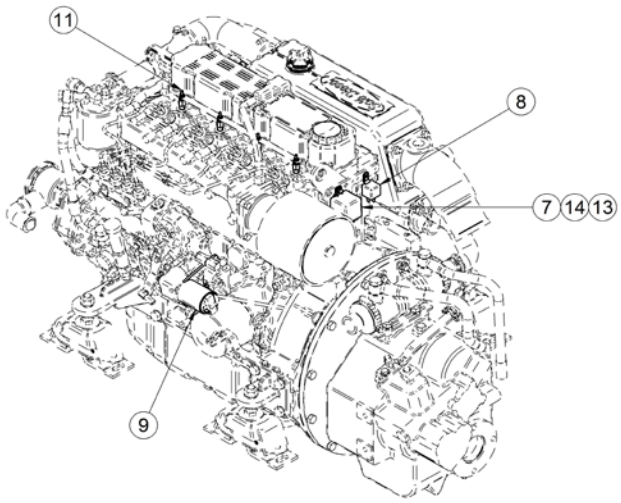

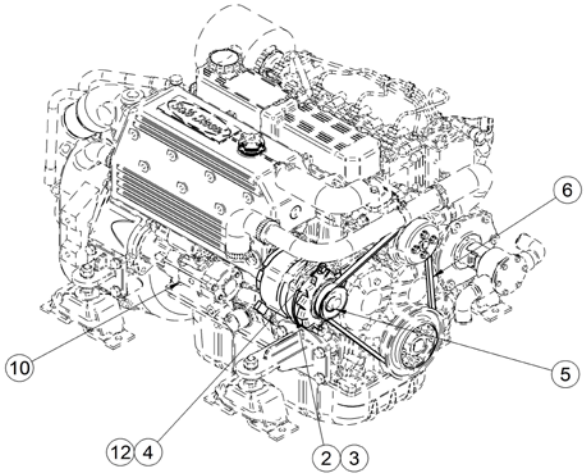

[NS] Not shown

Other Kits

13812010			Pressure Gauge Kit 10 BAR		
FIG.	**REF.**	**QTY**	**DESCR.**	**FROM**	**UPTO**
1	13812013.1	1	Pressure Tap		
2	13812011	1	Flexible Hose F-M G1/4-M16x2		
3	13812012	1	Pressure Gauge 0-10 bar		
4	13812014	1	Protective Rubber		

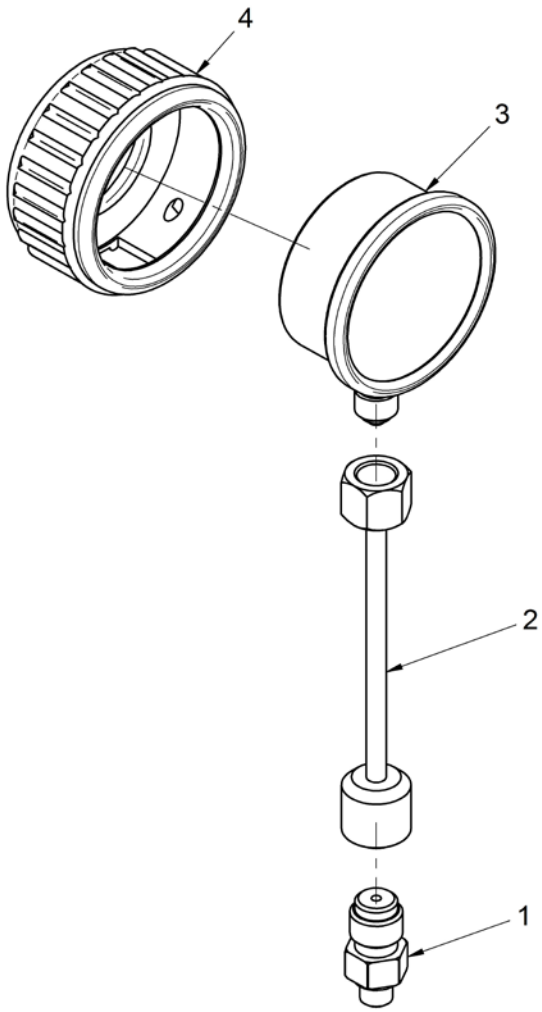

Other Kits

17012093			Kit Trolling Valve for TM-93/A		
FIG.	REF.	QTY	DESCR.	FROM	UPTO
1	24810050	1	Trolling Valve TM-93		
2	24810913	1	Clamp,CABLE		
3	51030005	2	Washer DIN 125-5		
4	57000375	6	Washer 17-22-1,5		
5	14712015	3	Bolt,Coupling pipe oil		
6	14719115	2	Coupling,cable		
7	51030006	4	Washer DIN 125-6		
8	51051107	2	Pin DIN-94 1,6-16		
NS	17112024	2	Pipe, rev.oil Cooler [NS]		

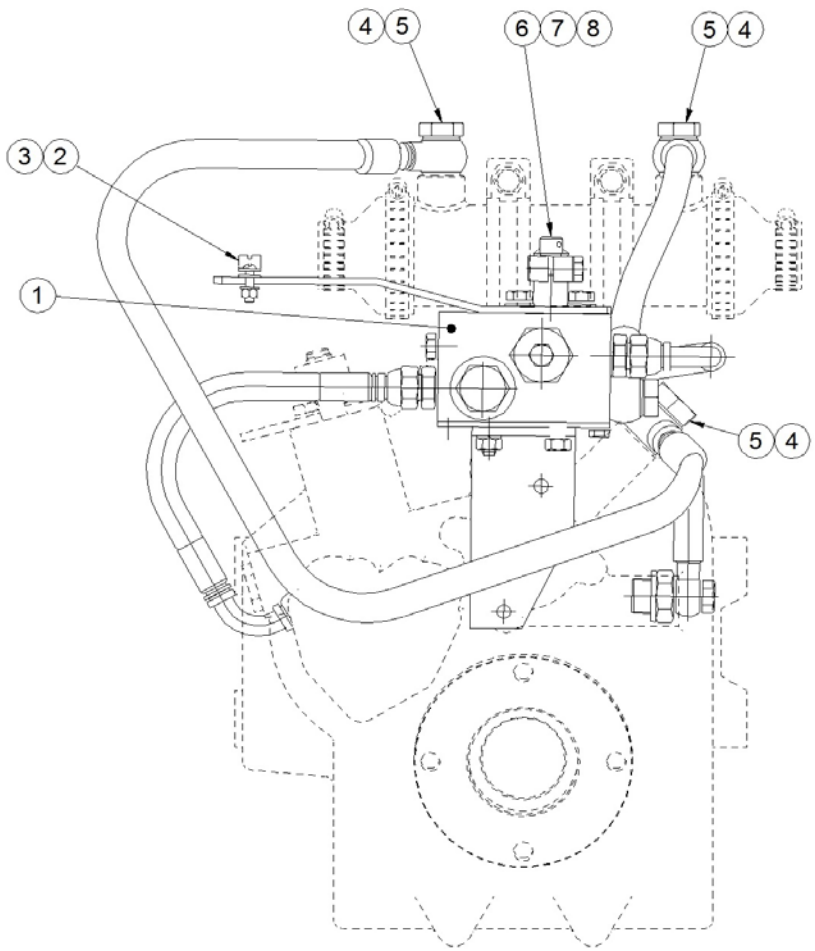

[NS] Not shown

17012345			Kit Trolling Valve for TM-345/A		
FIG.	REF.	QTY	DESCR.	FROM	UPTO
1	24850050	1	Trolling Valve TM-345A		
2	17012024	1	Pipe		
3	17512017	1	Pipe, rev.oil Cooler		
4	14712015	2	Bolt,Coupling pipe oil		
5	57000375	4	Washer 17-22-1,5		
6	24810913	1	Clamp,CABLE		
7	14719115	2	Coupling,cable		
8	51051107	2	Pin DIN-94 1,6-16		
9	51030006	1	Washer DIN 125-6		
10	51030005	2	Washer DIN 125-5		

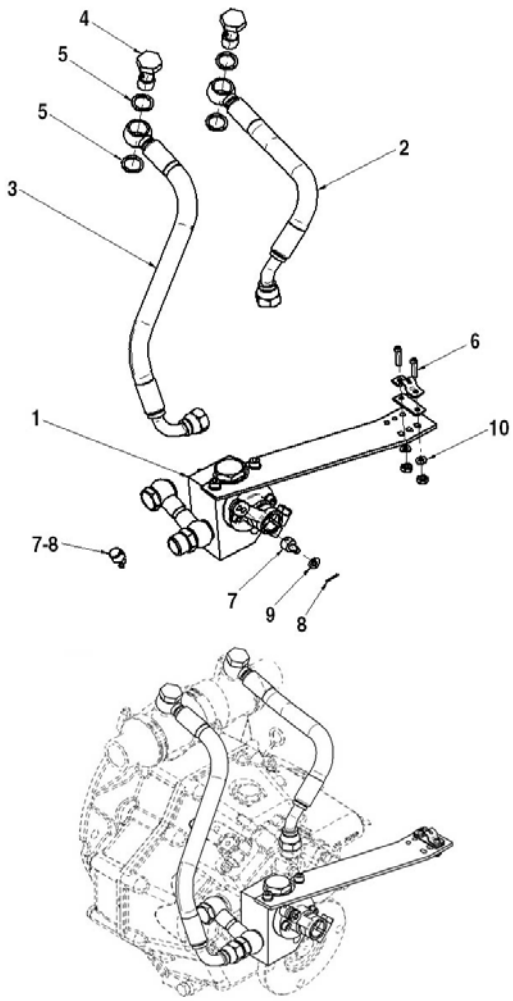

Other Kits

	17211150		Boiler Kit (S)		
FIG.	**REF.**	**QTY**	**DESCR.**	**FROM**	**UPTO**
1	17124053	2	Joint		

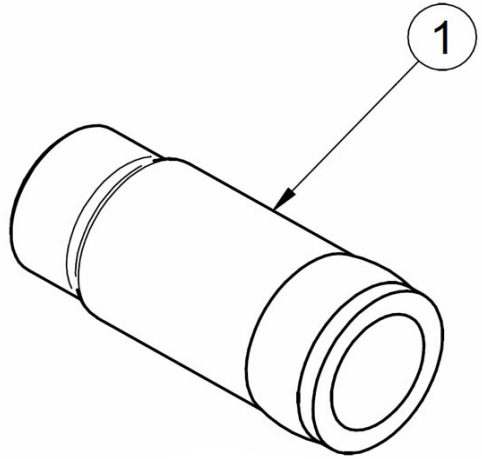

Other Kits

17411020			Kit Hose Extension, Sea Water		
FIG.	REF.	QTY	DESCR.	FROM	UPTO
1	17411021	1	Pipe, Sea water		
2	M87503040	0	Water Intake Hose (HQ) D. 30-38 [VAR]		
3	54082032	2	Clamp DIN 3017 32-50/12 W4		

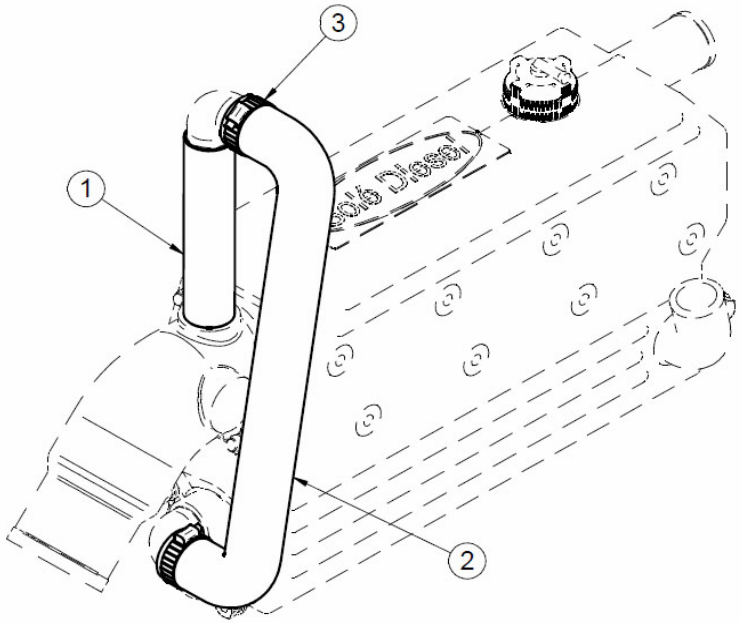

[VAR] Variable according to repair

17414000			Kit 2nd Fuel Filter (S)		
FIG.	REF.	QTY	DESCR.	FROM	UPTO
1	17414003	1	Bracket 2nd Filter		
2	17414002	1	Bracket		
3	19424022	2	Gas-Oil Filter Element		
4	16514022	2	Coupling,screw		
5	57000378	4	Washer 18-24-1,5		
6	51030010	2	Washer DIN 125-10		
7	53033010	2	Washer GROWER DIN 127-10		
8	52120010	2	Nut DIN 934 M10 8.8		
9	52101311	2	Bolt DIN 931 M10-40 8.8		
10	52101260	2	Bolt DIN 931 M8-35 8.8		
11	18617012	2	Spacer 10,5X24X15	03/10/2015	
12	53033008	2	Washer GROWER DIN 127-8		
13	17414005	1	2nd Filter Pipe		
14	17414004	1	2nd Filter Pipe		
NS	17414006	1	Joint [NS]		
NS	58088284	3	Pastic Cable Zip Tie [NS]		

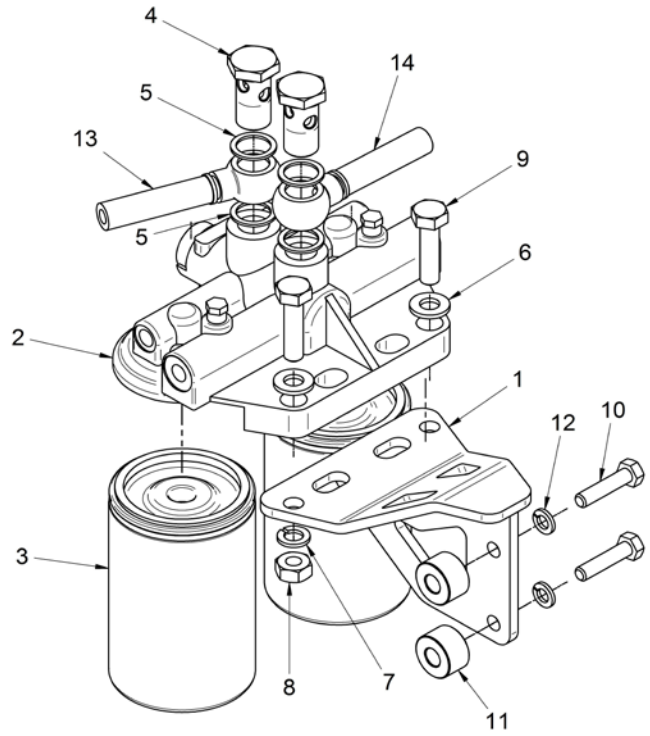

[NS] Not shown

Other Kits

17424100R			Kit Injection Pipes 2nd Wall (S)		
FIG.	REF.	QTY	DESCR.	FROM	UPTO
1	17424010R	1	Pipe Kits [NP]		
2	17414018	1	Assy,Fuel Return [NP]		
3	56000057	8	Washer 8-13-1,5 [NP]		
4	13114007	4	Screw SHORT Connector [NP]		

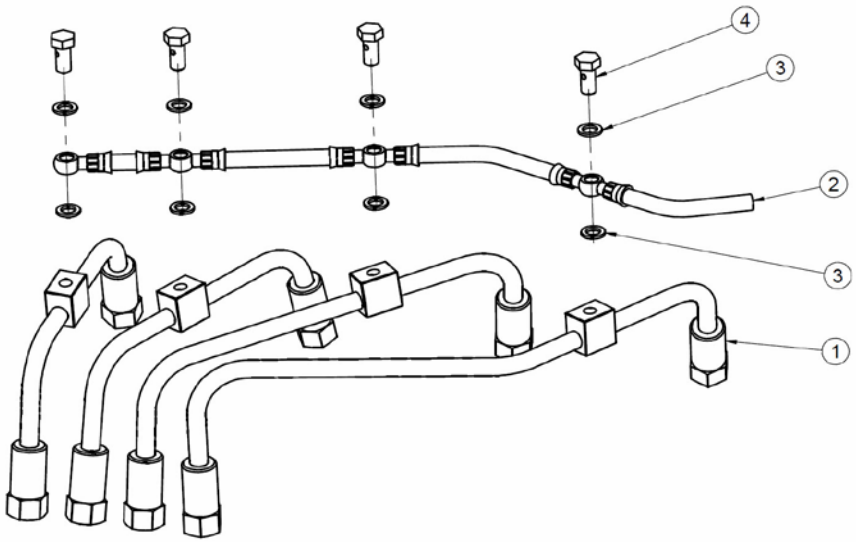

[NP] Not provided

19012170			Kit Trolling Valve for TM-170/A		
FIG.	REF.	QTY	DESCR.	FROM	UPTO
1	24820050	1	Trolling Valve TM-170		
2	24810913	1	Clamp,CABLE		
3	51030005	2	Washer DIN 125-5		
4	57000375	4	Washer 17-22-1,5		
5	14712015	2	Bolt,Coupling pipe oil		
6	14719115	2	Coupling,cable		
7	51030006	4	Washer DIN 125-6		
8	51051107	2	Pin DIN-94 1,6-16		
9	17112024	2	Pipe, rev.oil Cooler		

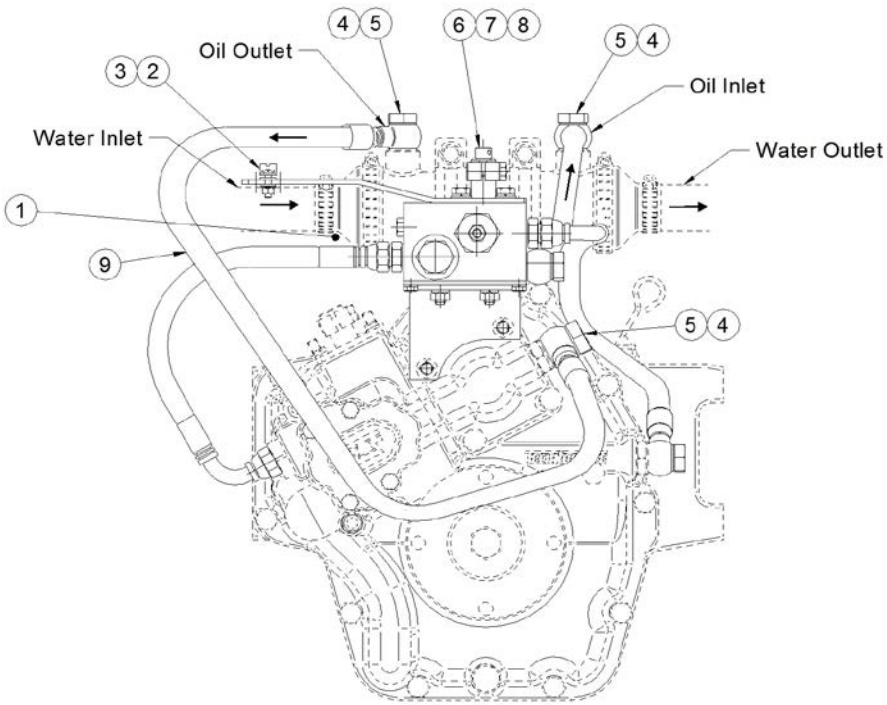

Exhaust System

17413118			Kit Dry Exh. Flexible Pipe & Silencer(S)		
FIG.	REF.	QTY	DESCR.	FROM	UPTO
1	18013115	1	Kit Dry Exhaust With Flexible Pipe (S)		
2	19013020	1	Gasket		
3	17413018	1	Exhaust Muffler		
4	52101463	4	Bolt DIN 931 M16-50 8.8		
5	53033016C	4	Washer	10/12/2009	
6	52120016	4	Nut DIN 934 M16 8.8		
7	51030016	4	Washer DIN 125-16		
8	17413019	1	RAINCover		

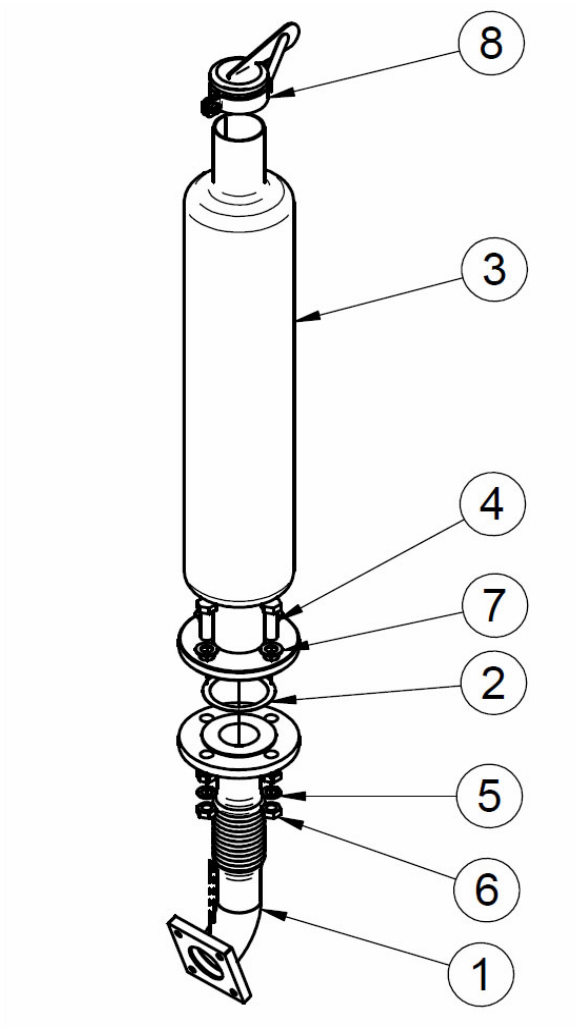

Exhaust System

	18013016		Exhaust Flange (S)		
FIG.	REF.	QTY	DESCR.	FROM	UPTO
1	18013016.1	1	Exhaust Flange		

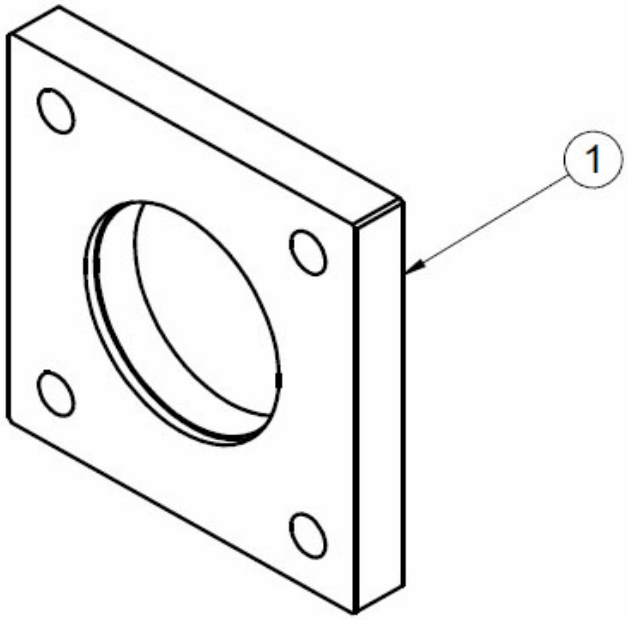

Exhaust System

18013115			Kit Dry Exhaust With Flexible Pipe (S)		
FIG.	REF.	QTY	DESCR.	FROM	UPTO
1	51068060	1	Flange		
2	19013017	1	Expansion,compensator		
3	51066060	1	KNEE 90 FIG. 6002/5 2"		
4	18013016.1	1	Exhaust Flange		

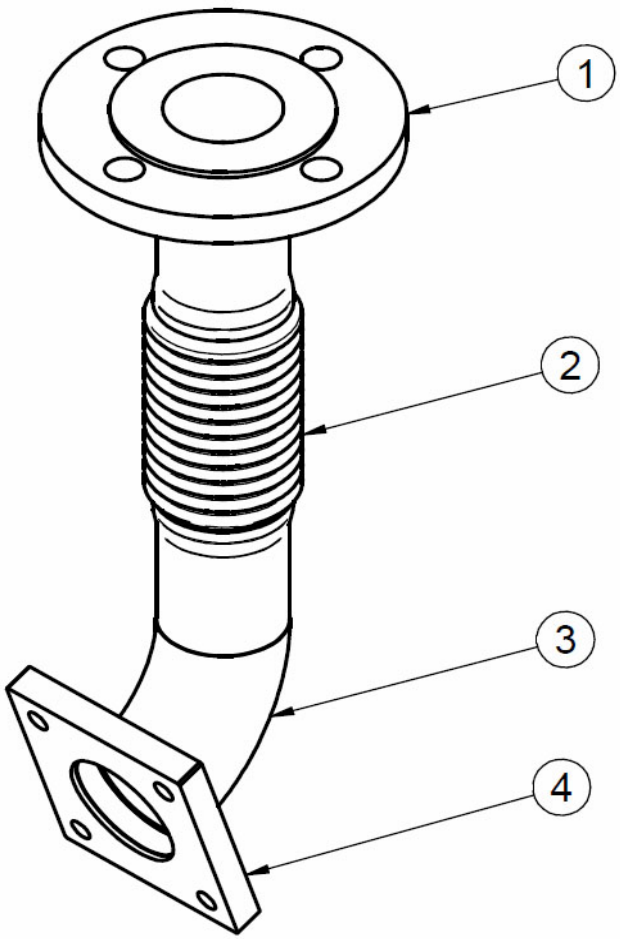

Power Take-off Pulley

	17110101		Pulley 2B (S)		
FIG.	**REF.**	**QTY**	**DESCR.**	**FROM**	**UPTO**
1	17110101.2	1	Pulley 2B		
2	53033008	4	Washer GROWER DIN 127-8		
3	52101265	4	Bolt DIN 931 M8-60 8.8		

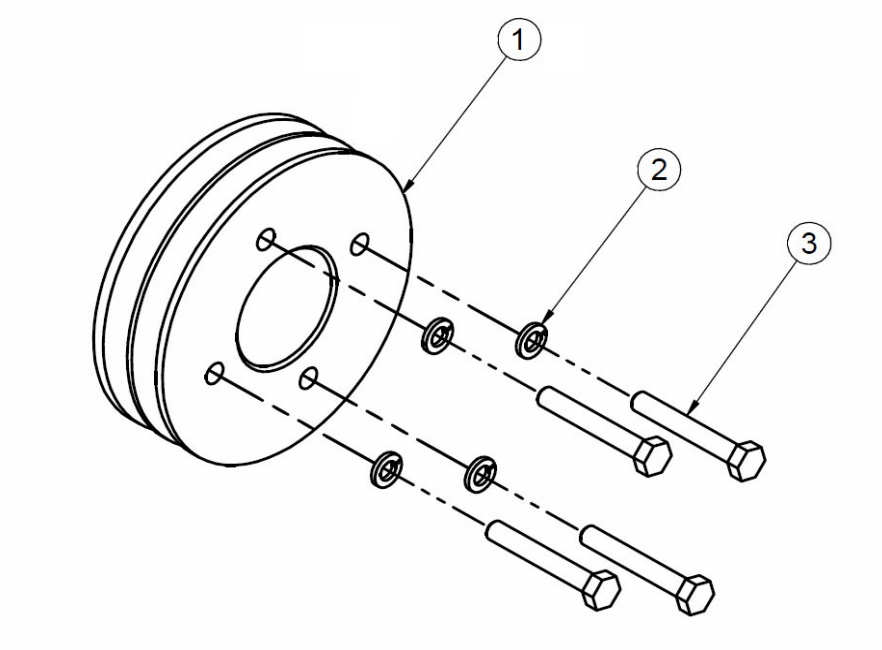

Power Take-off Pulley

	17110102		Pulley 2A (S)		
FIG.	**REF.**	**QTY**	**DESCR.**	**FROM**	**UPTO**
1	17110102.3	1	Pulley 2A		
2	53033008	4	Washer GROWER DIN 127-8		
3	52101264	4	Bolt DIN 931 M8-55 8.8		

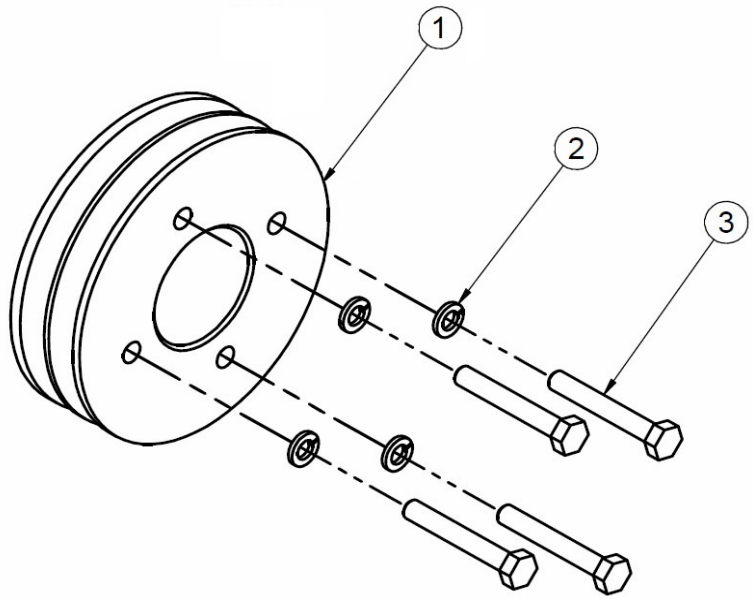

Power Take-off Pulley

	17410102		Pulley 4A D138 (S)		
FIG.	**REF.**	**QTY**	**DESCR.**	**FROM**	**UPTO**
1	17410102.1	1	Pulley 4A		
2	53033008	4	Washer GROWER DIN 127-8		
3	52101270	4	Bolt DIN 931 M8-85 8.8		

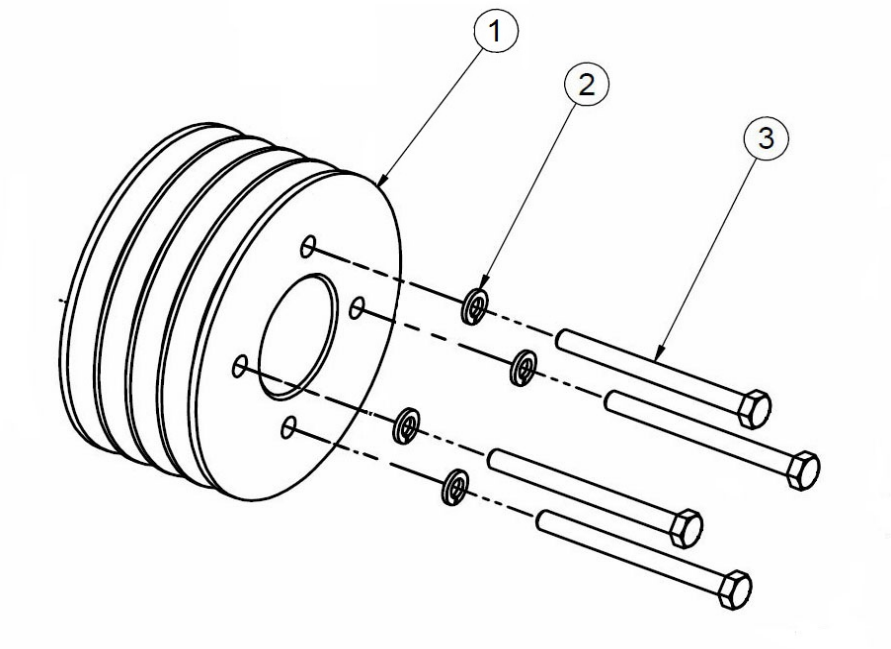

Power Take-off Pulley

	17410104		Pulley 4B (S)		
FIG.	**REF.**	**QTY**	**DESCR.**	**FROM**	**UPTO**
1	17510104.1	1	Pulley 4B		
2	53038008	4	Washer DIN 6798-A 8		
3	52101264	4	Bolt DIN 931 M8-55 8.8		
4	13211057	1	Rubber		
5	60180007	1	Outlet Coupling		

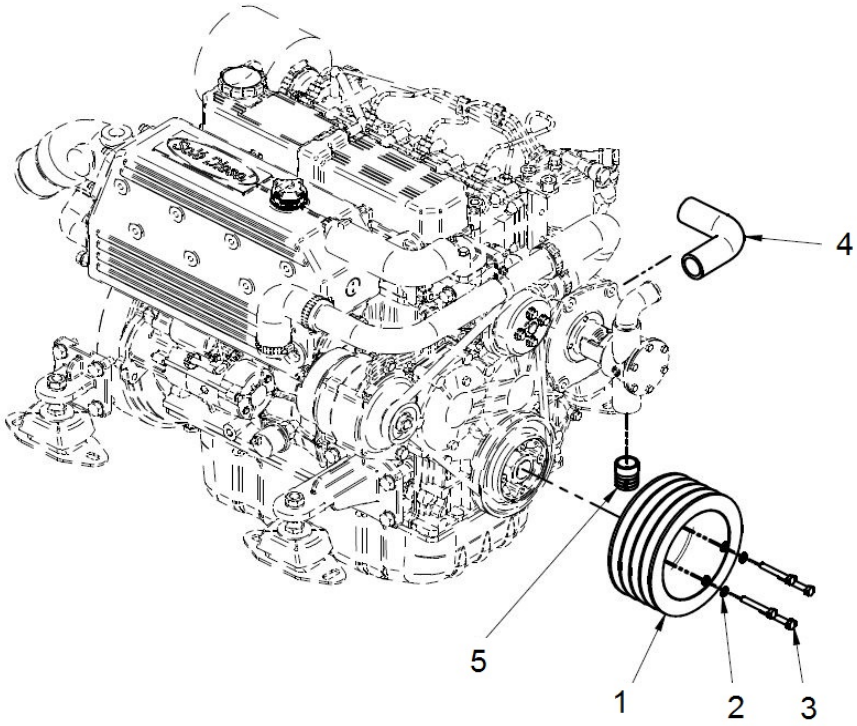

Power Take-off Pulley

	17410125		Kit Power Take-off D40 (S)		
FIG.	**REF.**	**QTY**	**DESCR.**	**FROM**	**UPTO**
1	17410125.1	1	PTO Shaft		
2	53033008	4	Washer GROWER DIN 127-8		
3	52102260	4	Bolt DIN 933 M8-35 8.8		
4	60500064	1	Butt Washer		
5	53033010	10	Washer GROWER DIN 127-10		
6	52102309	1	Bolt DIN 933 M10-30 8.8		
7	40040086	1	Flange Ø 40 Shaft Key		

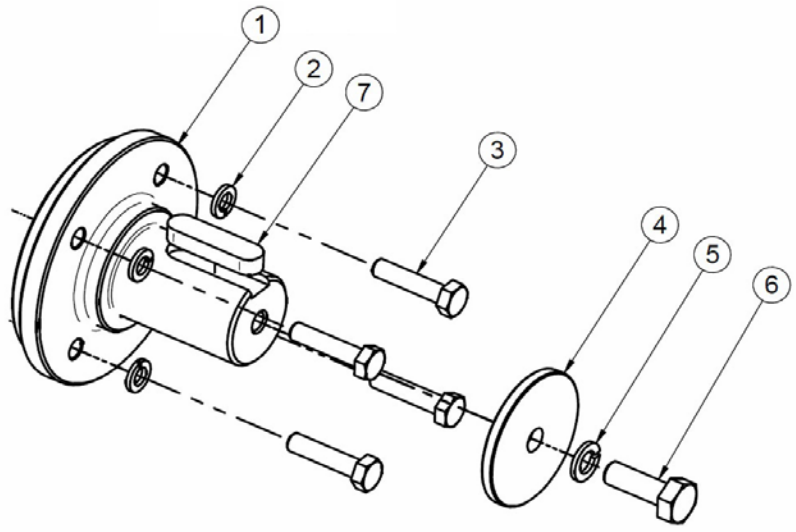

Power Take-off Pulley

17410126			Kit Pulley & Power Take-off 2A		
FIG.	REF.	QTY	DESCR.	FROM	UPTO
1	17110102.1	1	2A Pulley		
2	17410125	1	Kit Power Take-off D40 (S)		
3	53033008	4	Washer GROWER DIN 127-8		
4	60500064	1	Butt Washer		
5	53033010	1	Washer GROWER DIN 127-10		
6	52102309	1	Bolt DIN 933 M10-30 8.8		
7	40040086	1	Flange Ø 40 Shaft Key		
8	52101266	4	Bolt DIN 931 M8-65 8.8		

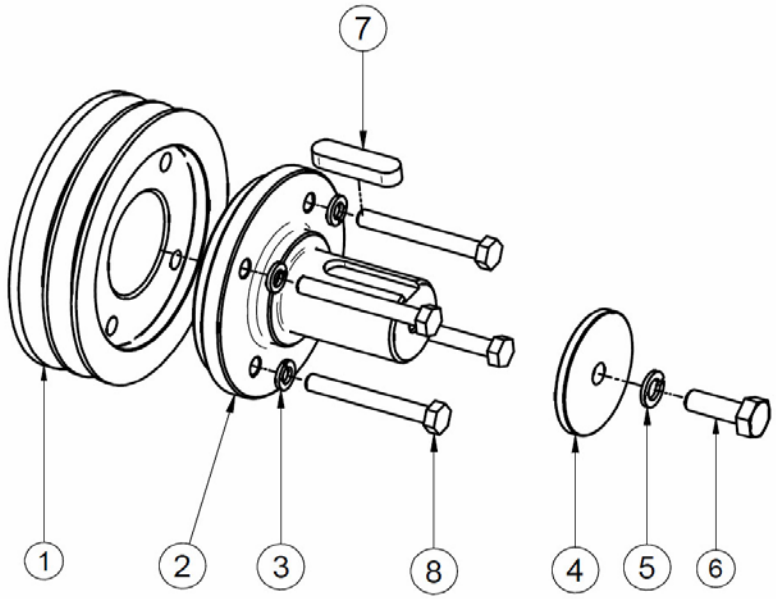

Power Take-off Pulley

17410128			Kit Pulley & Power Take-off 2B		
FIG.	**REF.**	**QTY**	**DESCR.**	**FROM**	**UPTO**
1	17110101.1	1	Pulley 2B for PTO Shaft		
2	17410127	1	PTO Shaft		
3	40040086	1	Flange Ø 40 Shaft Key		
4	60500064	1	Butt Washer		
5	53033008	4	Washer GROWER DIN 127-8		
6	52101268	4	Bolt DIN 931 M8-75 8.8		
7	53033010	1	Washer GROWER DIN 127-10		
8	52102309	1	Bolt DIN 933 M10-30 8.8		

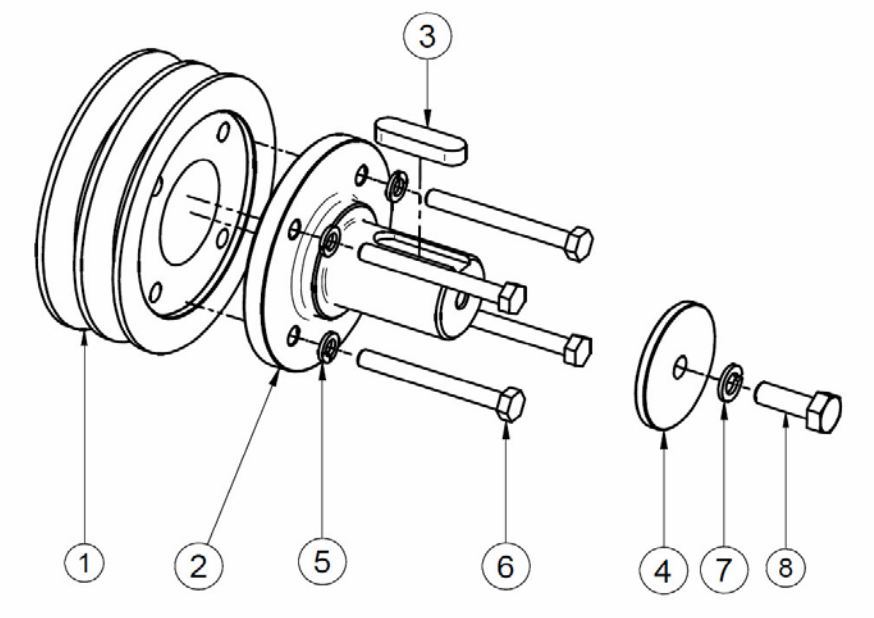

Power Take-off Pulley

	17510104		Pulley 4B (S)		
FIG.	**REF.**	**QTY**	**DESCR.**	**FROM**	**UPTO**
1	17510104.1	1	Pulley 4B		
2	53038008	4	Washer DIN 6798-A 8		
3	52101264	4	Bolt DIN 931 M8-55 8.8		

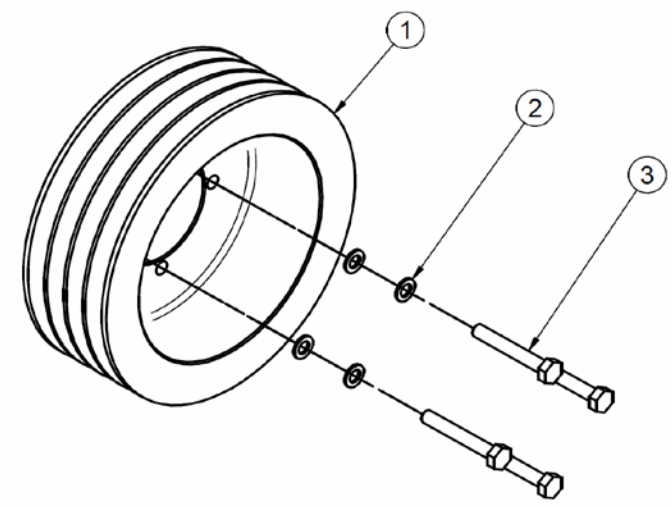

Power Take-off Pulley

	17510106		Pulley 4A D195 (S)		
FIG.	**REF.**	**QTY**	**DESCR.**	**FROM**	**UPTO**
1	17510106.1	1	Pulley 4A		
2	53038008	4	Washer DIN 6798-A 8		
3	52101264	4	Bolt DIN 931 M8-55 8.8		

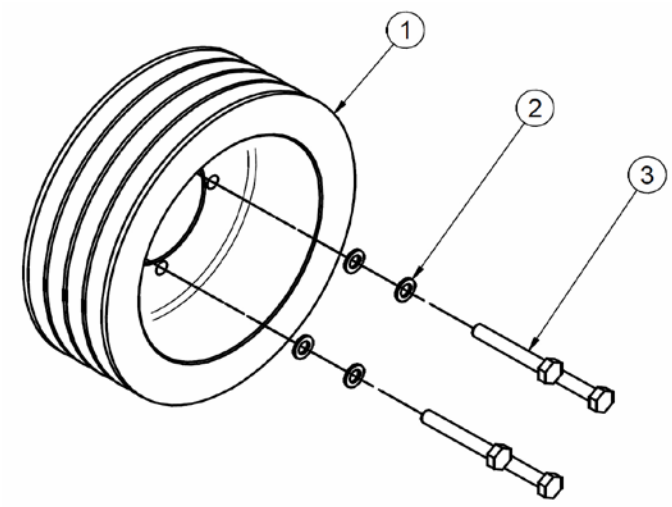

Kit Keel Cooling

17411200			Kit Keel Cooling & Dry Exh.- TM GearBox		
FIG.	REF.	QTY	DESCR.	FROM	UPTO
1	18011103	1	Cover,Water Cooler		
2	18011008	2	O-Ring D. 72X3		
3	18013016	1	Exhaust Flange (S)		
4	16513002	1	Exhaust Elbow Gasket		
5	52102258	1	Bolt DIN 933 M8-25 8.8		
6	53038008	1	Washer DIN 6798-A 8		
7	19411045	1	Pipe 42-54-90		
8	54082032	2	Clamp DIN 3017 32-50/12 W4		
9	17511015	1	Pipe		
10	54082025	2	Clamp DIN 3017 25-40/12 W4		
11	17420046	1	Cover,Gear Case		
12	52101265	5	Bolt DIN 931 M8-60 8.8	05/04/2017	
12	52101266	5	Bolt DIN 931 M8-65 8.8		04/04/2017
12	53033008	5	Washer GROWER DIN 127-8		
15	52102106	1	Bolt DIN 933 M5-15 8.8		
16	18011102	1	Cover,Water Cooler		
17	13311005	1	Plug		
NS	M87503242	0	Water Intake Hose (HQ) D. 32-42 [NS] [VAR]		
NS	15212022	1	Elbow [NS]	05/04/2017	
NS	58088280	2	Pastic Cable Zip Tie [NS]		

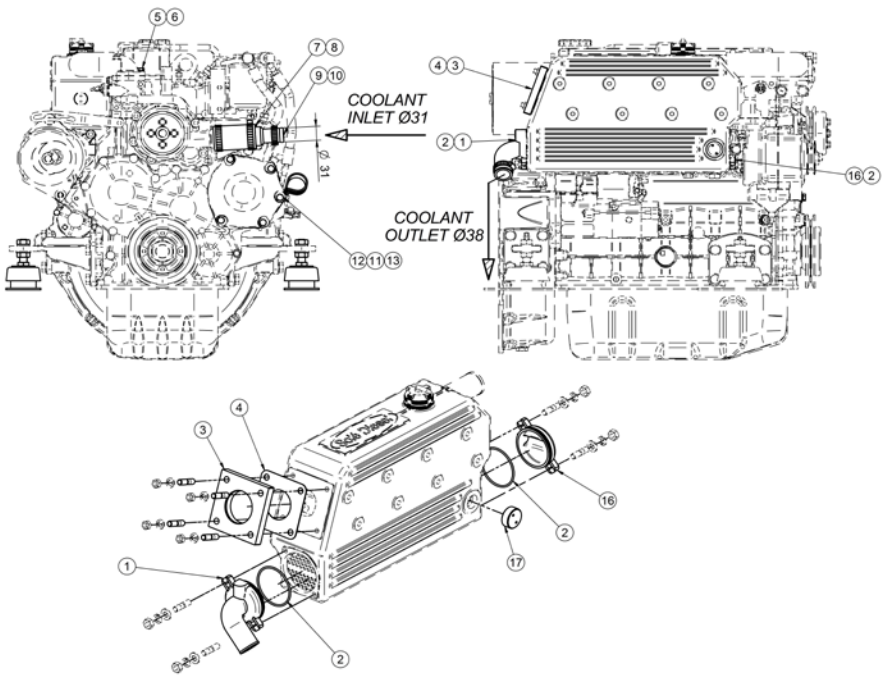

[NS] Not shown
[VAR] Variable according to repair

Kit Instrument Panel SVT

60910024			SVT 30 Panel 12V + Exh. Temp. Alarm Kit		
FIG.	**REF.**	**QTY**	**DESCR.**	**FROM**	**UPTO**
1	60900280	1	Exhaust Temperature Alarm Kit		
2	60910004	1	SVT 30 Panel 12V		

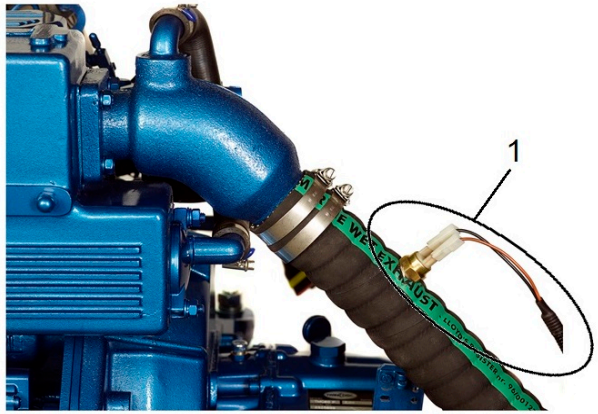

Kit Instrument Panel SVT

60910025			SVT 30 24V Panel + Exh. Temp. Alarm Kit		
FIG.	**REF.**	**QTY**	**DESCR.**	**FROM**	**UPTO**
1	60900280	1	Exhaust Temperature Alarm Kit		
2	60910005	1	SVT 30 24V Panel		

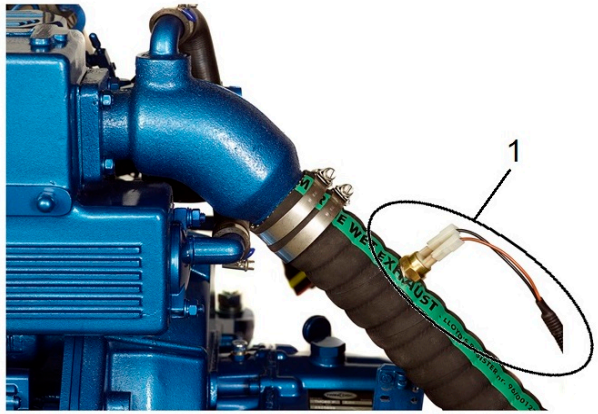

Kit Instrument Panel SVT

60974135			Kit 2nd Panel SVT 40 MINI-74/SM-105 12V		
FIG.	**REF.**	**QTY**	**DESCR.**	**FROM**	**UPTO**
1	60974130	1	SVT 30 MINI-74/SM-105/103 Panel		
2	60974132	1	SVT 40 MINI-74/SM-105 Panel		
3	60900210.2	1	T Double Panel DERIVATION		

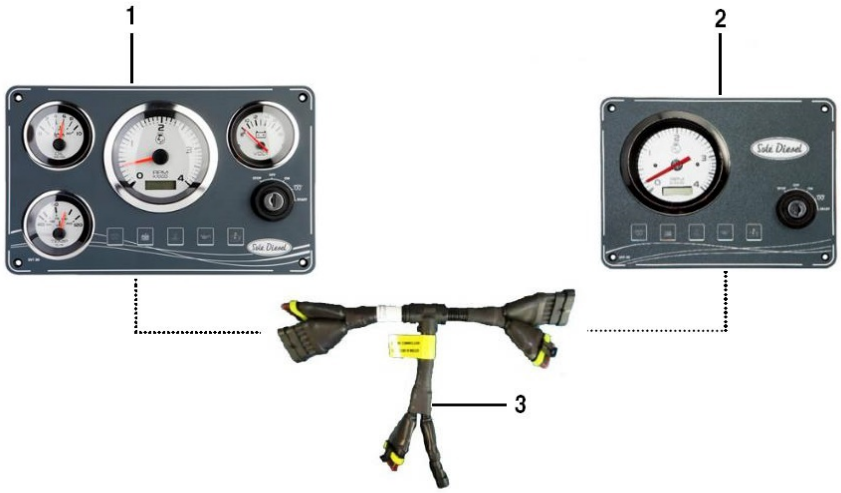

Kit Instrument Panel SVT

60975134			Kit 2nd Panel SVT 40 MINI-74/105 24V		
FIG.	**REF.**	**QTY**	**DESCR.**	**FROM**	**UPTO**
1	60975130	1	SVT 30 MINI-74/SM-105/103 24V Panel		
2	60975133	1	SVT 40 MINI-74/SM-105 24V Panel		
3	60900210.2	1	T Double Panel DERIVATION		

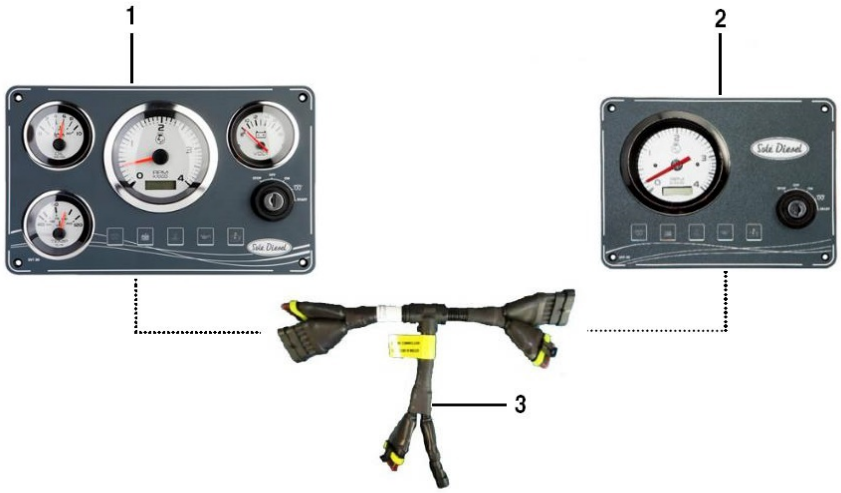

Kits NMEA 2000 - one engine

61474100			Kit SDC 2000 MINI-74/105 12V		
FIG.	**REF.**	**QTY**	**DESCR.**	**FROM**	**UPTO**
1	61400200	1	Kit SDC 2000 24V Standard		
2	60900091	2	MICRO Relay 12V 12-20		

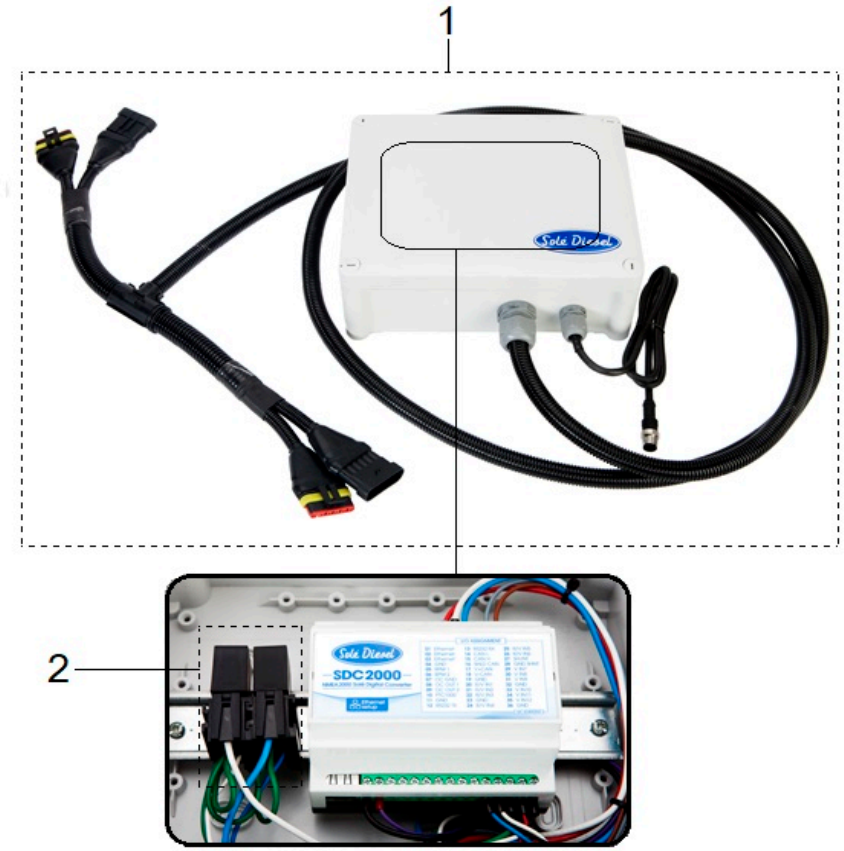

Kits NMEA 2000 - one engine
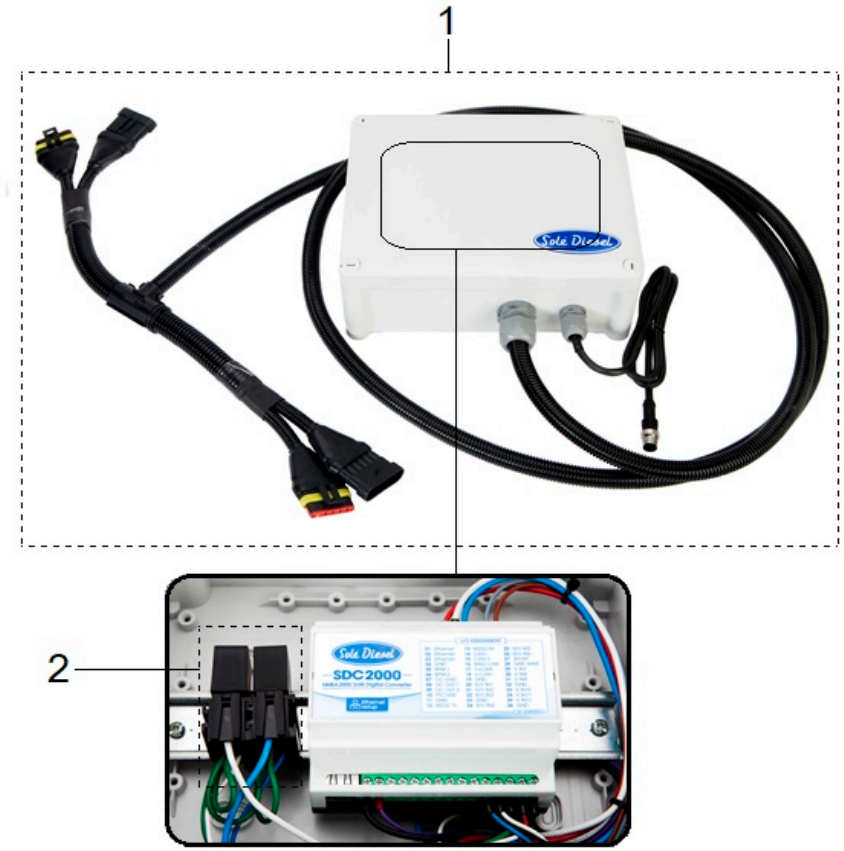
61474200			Kit SDC 2000 MINI-74/105 24V		
FIG.	**REF.**	**QTY**	**DESCR.**	**FROM**	**UPTO**
1	61400200	1	Kit SDC 2000 24V Standard		
2	60900092	2	MICRO Relay 24V 24-10