Solé Diesel

Engine SM-105

VERSION 2017-10

SPARE PARTS MANUAL

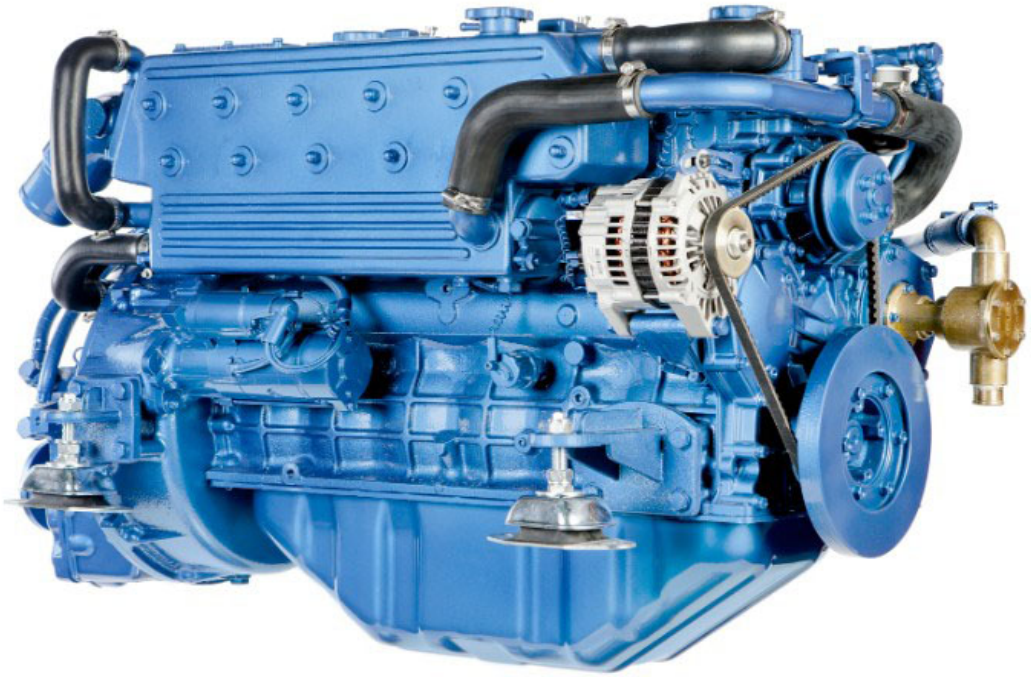

PARTS LIST CATALOGUE

NORMS TO PLACE AN ORDER:

For fast and more efficient service, please specify the following information on spare parts orders that must be preferably done by FAX or e-mail as specified below:

1- Engine model: As shown in identification plate

2- Engine serial number: As shown in identification plate and stamped on crankcase

3- Item description + part number + quantity required

Spare parts requests must be adressed to:

recambios@solediesel.com

Telf.: +34 93 775 44 05

Fax: +34 93 775 30 13

The components shown in the catalog have:

- Figure: Number by which they are represented in scheme
- Description: Trade name of the component
- Quantity: Total number of parts used in the assembly of the part represented (may differ from the total minimum quantities)

Hoses, indicates the total length in meters

The diagrams shown in this catalog of spare parts, have only the purpose to identify the piece in question, its representation is not meaningful and may differ from the actual piece.

In case of doubt, contact Solé Diesel, or your authorized dealer.

The parts i / or references in this catalog are subject to change without notice.

SOLÉ, S.A.

C-243b, Km, 2 - P.O. BOX 15

08760 Martorell (Barcelona) Spain

Download the latest version of this manual HERE

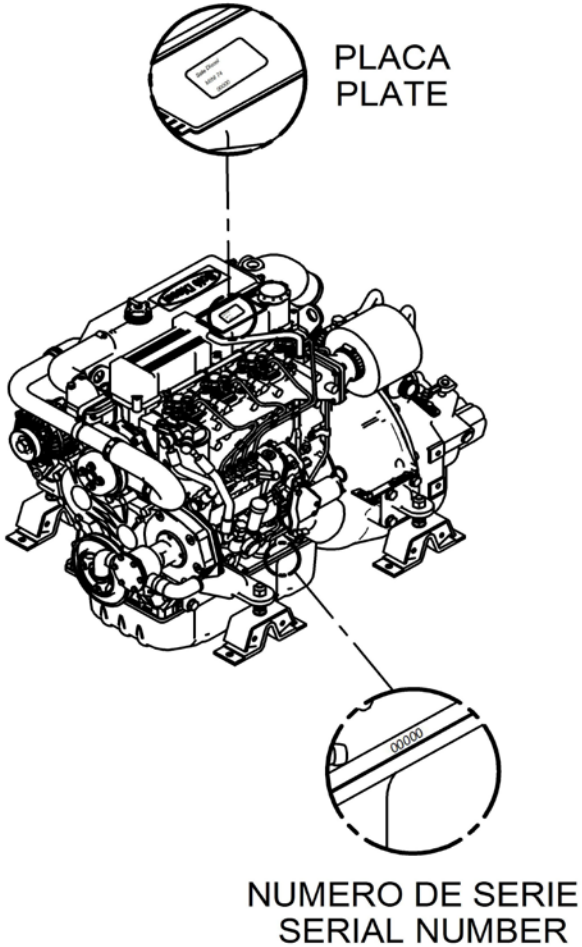

Contents

Engine Body
Cylinder Head
Rocker Cover & Breather
Valve Drive
Timing Parts
Gear Case
Cranckcase
Flywheel Housing
Piston & Connectiong Rod
Crankshaft & Flywheel
Oil Sysem
Oil Pan
Engine Brackets
Bracket, Engine Control

Inlet & Exhaust
Inlet

Cooling System
Water Pump
Cooler Pipes
Water Cooler Assy SM-105
Body, Water Cooler and Neck
Wet Exhaust
1" Water Pump, Set

Fuel System
Fuel Pipe
Injection Nozzle
Fuel Injection Pump
Governor Parts
Governor Parts
Fuel Filter
Feed Pump

12V Electrical System
Kit Alternator 14V/110A
Kit Alternator 14V/95A ISKRA
Starter
12V Electrical Wiring
SVT 30 MINI-74/SM-105 Panel

24V Electrical System
Kit Alternator 28V/55A
Starter 24V
24V Electrical Wiring

Maintenance Kit
Gasket Kit
Pipe Rubber Set,Water Line
Gasket Kit
Repair Kit Water Pump 1"

Gearbox TM-485A1
Sheet 1/4
Sheet 2/4
Sheet 3/4
Sheet 4/4
Maintenance Kit

Gearbox TM-880A
Sheet 1.1/4
Sheet 1.2/4
Sheet 1.3/4
Input Shaft 2/4
Intermediate Shaft 3/4
Output Shaft 4/4
Maintenance Kit

Gearbox TM-170
Sheet 1.1/4
Sheet 1.2/4
Sheet 1.3/4
Input Shaft 2/4
Intermediate Shaft 3/4
Output Shaft 4/4
Maintenance Kit

Gearbox TM-170A
Sheet 1.1/4
Sheet 1.2/4
Sheet 1.3/4
Input Shaft 2/4
Intermediate Shaft 3/4
Output Shaft 4/4
Maintenance Kit

Gearbox TM-93
Sheet 1.1/4
Sheet 1.2/4
Sheet 1.3/4
Intermediate Shaft 2/4
Input Shaft 3/4
Output Shaft 4/4
Maintenance Kit

Gearbox TM-93A
Sheet 1.1/4
Sheet 1.2/4
Sheet 1.3/4
Intermediate Shaft 2/4
Input Shaft 3/4
Output Shaft 4/4
Maintenance Kit

Kit Gearbox
Kit Z-Drive VOLVO 280/290 Z=26
Kit Z-Drive Volvo 280/290 Z=10
Kit GearBox ZF-63IV
Kit SAE 7
Kit GearBox TM-93/A
Kit GearBox TM-170/170A/880A
Kit GearBox TM-265/A
Kit REV.BW For SM-105
Kit GearBox PRM-750 IN-LINE
Kit GearBox TM-485A1
Kit GearBox PRM-500
Kit Bobtail-Keel Cooling

Electrical System
Kit 2nd Alternator 28V/140A
Kit 2nd Alternator 28V/55A
Kit 2nd Alternator 24V/55A Bipolar
Kit Wire Earth Isolated 12V
Kit 24V Engine Electrical System

Other Kits
Pression Gauge Kit
Kit Trolling Valve for TM-93
Boiler Kit (S)
Kit Hose Extension, Sea Water
Kit 2nd Fuel Filter (S)

Kit Double Jacketed Fuel Injection Pipes
Kit Trolling Valve for TM-170
Kit Trolling Valve for TM-265

Exhaust System

Kit Dry Exh. Flexible Pipe & Silencer(S)
Exhaust Flange (S)
Kit Dry Exhaust With Flexible Pipe (S)

Power Take-off Pulley

Pulley 4B (S)
Pulley 4A D195 (S)
Kit Power Take-off D40 (S)
Kit Power Take-off D50

Kit Keel Cooling

Kit Keel Cooling & Dry Exhaust Hydr.Gear

Kit Instrument Panel SVT

Kit 2nd Panel SVT 40 MINI-74/SM-105 12V
Kit 2nd Panel SVT 40 MINI-74/105 24V

Kits NMEA 2000 - one engine

Kit SDC 2000 MINI-74/105 12V
Kit SDC 2000 MINI-74/105 24V

Engine Body

D_MI10_1_1			Cylinder Head		
FIG.	REF.	QTY	DESCR.	FROM	UPTO
1	17521001	1	Head Assy,Cylinder		
2	(*)	3	Not available [NP]		
2A	17220006	12	Cap, SealING		
2B	13121003	11	Cap Sealing [NP]		
2C	17121002	12	Guide,Valve [NP]		
2D	17421061	6	Seat,Valve,IN		
2E	17421062	6	Seat,Valve,Exhaust		
2F	17421015	6	JET,COMBUSTION		
4	17121016	1	Plug, drain		
5	17121013	1	Gasket		
6	17521004	1	Cylinder Head Gasket		
7	17421005	25	Bolt,cylinder head		
8	17420014	1	EYE,LIFTING,Front		
9	17421018	1	EYE,LIFTING,Head REA		
10	17421011	1	Gasket		
11	13820043	2	Bolt,W/Washer		
12	17121012	4	Bolt, w/washer		

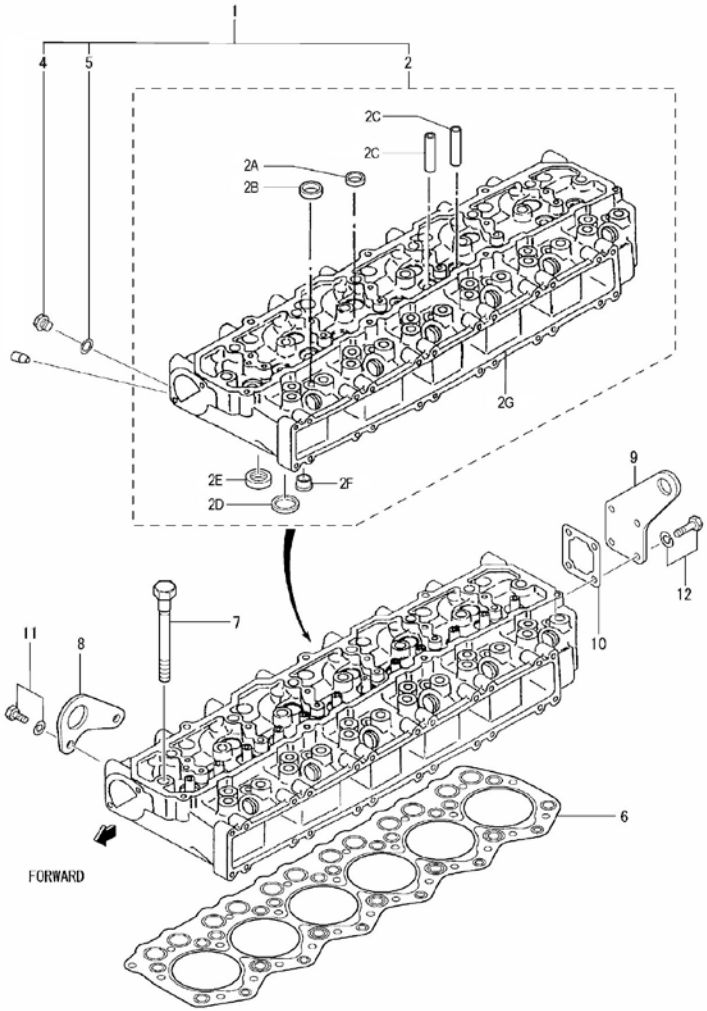

[NP] Not provided

Engine Body

D_MI10_1_2			Rocker Cover & Breather		
FIG.	REF.	QTY	DESCR.	FROM	UPTO
1	17521009	1	Cover Assy,Rocker		
2	17521010	1	Gasket,Rocker Cover		
3A	52101261	7	Bolt DIN 931 M8-40 8.8		
3B	53033008	7	Washer GROWER DIN 127-8		
4	13221003	2	Cap Oil FILLER		
5	17521007	2	Clip,Hose		
6	17521006	2	Hose,BREATHER		
7	17521007.1	2	Clamp,Hose		

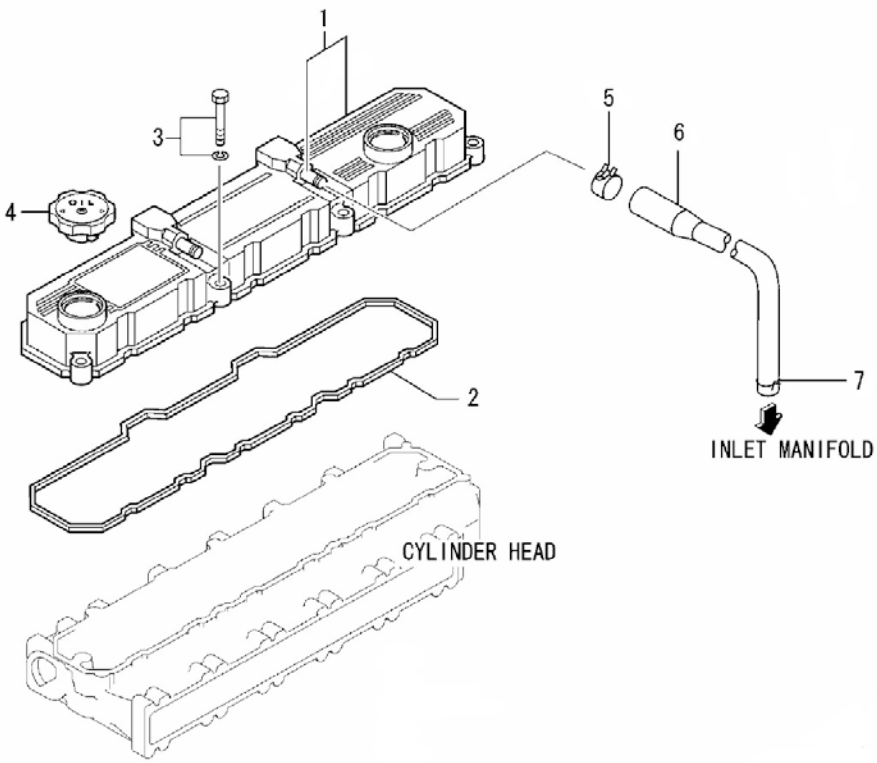

Engine Body

D_MI10_1_3			Valve Drive		
FIG.	REF.	QTY	DESCR.	FROM	UPTO
1	17422055G	6	Intake Valve [NP]		
2	17422056G	6	Exhaust Valve [NP]		
3	13322028	12	Spring,valve outler		
4	17422058	12	Retainer,Upper		
5	17122059	24	COTTER,Valve		
6	13322024	12	Cap		
7	17422054	12	Seal,Valve Stem		
8	(*)	1	Not available [NP]		
8A	17422142.1	12	Rocker Assy		
8AA	17122060	12	Nut		
8AB	17122044	12	Screw Adjusting		
8B	17422047G.1	5	Spring,Rocker		
8C	17522146	1	Shaft,Assy,Rocker		
8CA	13322023	2	Cap, SealING		
8D	53040019	2	CIRClip DIN 471 E-19 [NP]		
8E	17422048	6	Bracket,Rocker Shaft		
8F	17422053	6	Bolt,Rocker Bracket		
8G	17122051	6	Bolt, w/washer		

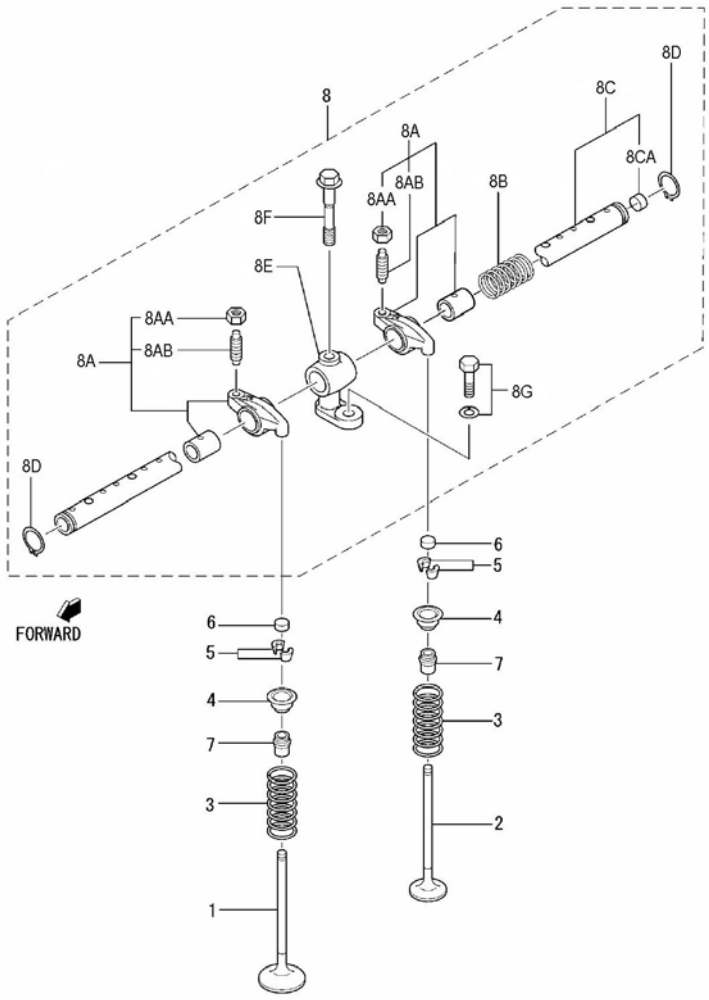

[NP] Not provided

Engine Body

D_MI10_1_4			Timing Parts		
FIG.	REF.	QTY	DESCR.	FROM	UPTO
1	17422037	1	Gear,CamShaft Z=46		
2	17422040	1	Gear,INJ.Pump Z=46		
3	17422038	1	Gear,IDLER Assy Z=49		
4	17122032	1	Plate, thrust		
5	13322079	1	Bolt		
6	17422066	1	Gear,Oil Pump Z=31		
7	17522075	1	Plate,THRUST		
8	13820043	2	Bolt,W/Washer		
9	17122061	12	Tappet		
10	17122041	12	ROD, push		
11	17522035	1	CamShaft		
12	13322034	1	KEY WOODRUFF		

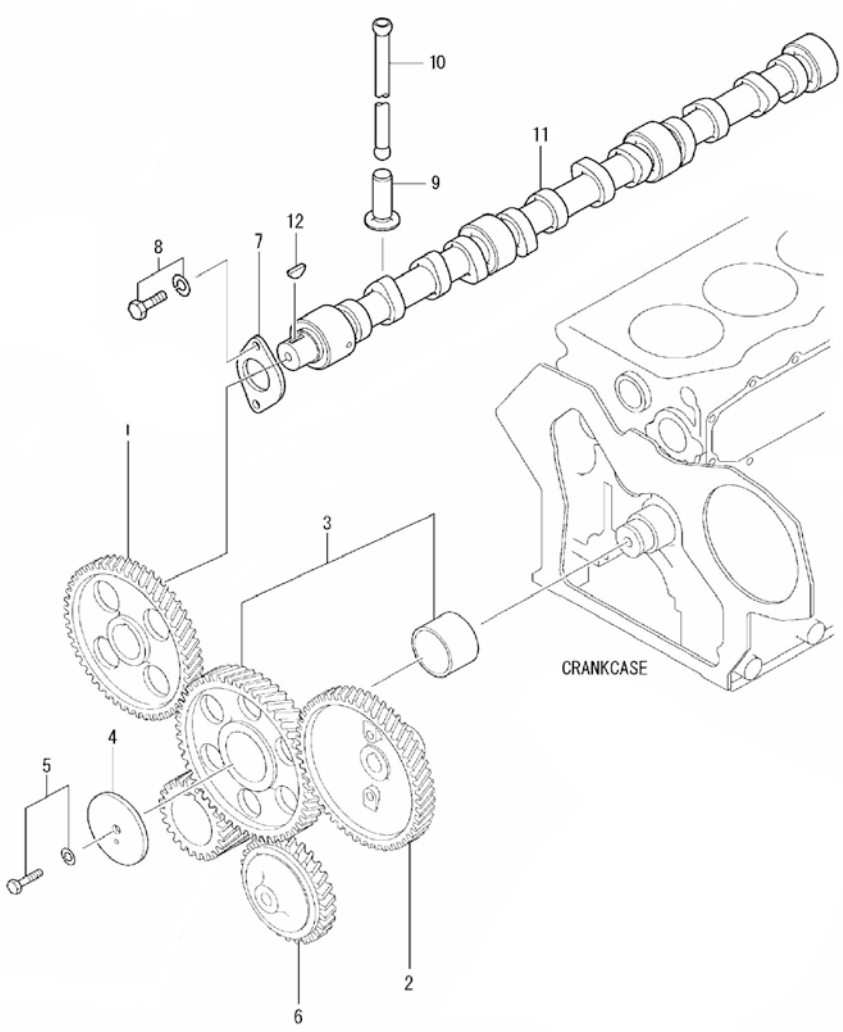

Engine Body

D_MI74_1_5			Gear Case		
FIG.	REF.	QTY	DESCR.	FROM	UPTO
1	17420024	1	Plate, Front		
2	17420035	1	Case Gear		
3	17420018	1	Gasket,Front Plate		
4	13820043	5	Bolt,W/Washer		
5	17420040	1	Gasket,Gear		
6	17120047	13	Bolt, w/washer		
7	17420039.1	1	Seal Assy,Oil		
8	17411026	1	Coupling Drive		
9	17422071	1	Nut,INJ.Pump		
10	15310072	1	CrossHead		
11	17420047	1	O-Ring D. 140X2		
12	17410010	1	Block Water Pump		
13	13310013	1	Gasket,water pump		
14	51030008	5	Washer DIN 125-8		
15	53038008	5	Washer DIN 6798-A 8		
16	52101266	5	Bolt DIN 931 M8-65 8.8		
17	51030006	4	Washer DIN 125-6		
18	52103156	4	Bolt DIN 912 M6-16 8.8		

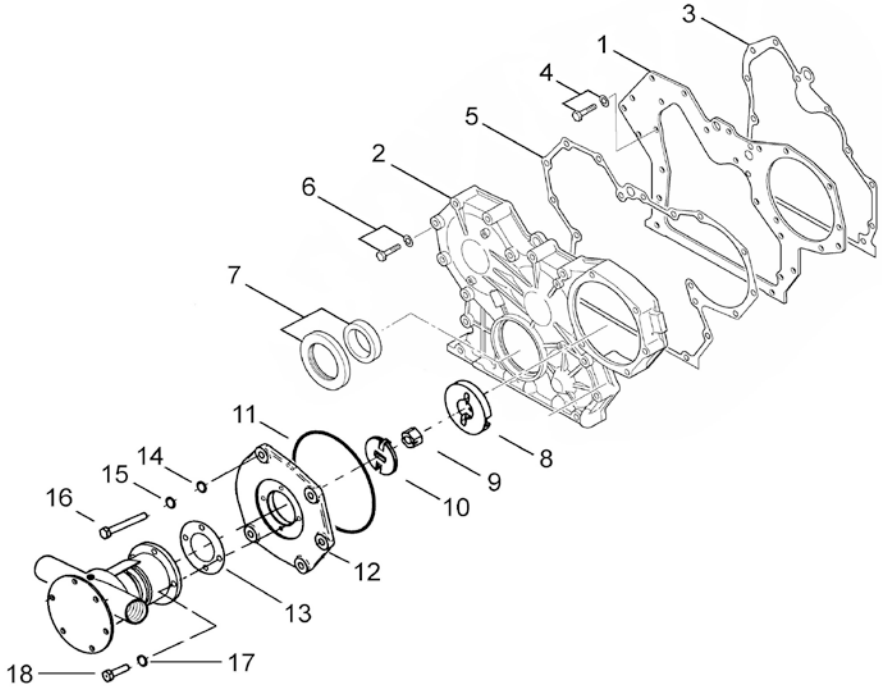

Engine Body

D_MI10_1_6			Cranckcase		
FIG.	REF.	QTY	DESCR.	FROM	UPTO
1	17520001	1	CRANKCase Assy		
2	(*)	13	Not available [NP]		
2A	13320007	1	Cap, SeallNG		
2B	13320006	14	Cap, SeallNG		
2E	17420009	14	Bolt Bearing Cap		
2G	13320002	2	Bushing,camShaft nº2		
2H	17120015	1	BUSING,camShaft r		
2I	17520015	1	Bushing,CamShaft,F		
3	13320007	7	Cap, SeallNG		
5	17420112	2	Seal,Valve		
6	17420013	1	Plug,Cam		
7	17420036	2	Pin,Dowel		
8	13320025	2	Pin		
9	17120019	2	Pin, dowel		
10	17420012	6	Pin,Spring		
11	17420011	1	Bushing		
12	17420034	1	Shaft,IDLER		
13	17120022	1	Plug, tapered		
14	17820011	9	Plug, Tapered [NP]	12/07/2017	
14	13120011	9	Plug, Tapered [NP]		12/07/2017
15	17120021	2	Plug TAPER [NP]		
16	13320044	1	SWITCH Oil Pressure		
17	17520003	1	Bearing Set,MAIN STD		
18	17520004	1	Bearing Set,MAIN -0,25		
19	17520005	1	Bearing Set,MAIN -0,50		
20	17520006	1	Bearing Set,MAIN -0,75		
21	17420109	3	Plate,THRUST.C/S STD		
22	17420110	3	Plate,THRUST.C/S +0,15		
23	17420111	3	Plate,THRUST.C/S +0,30		

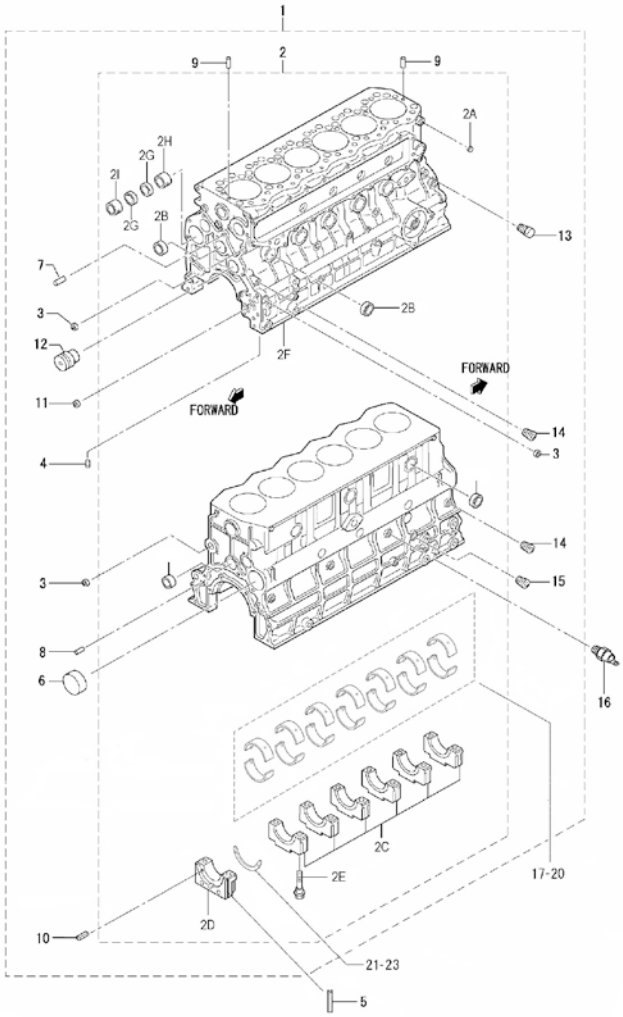

[NP] Not provided

Engine Body

D_MI74_1_7			Flywheel Housing		
FIG.	REF.	QTY	DESCR.	FROM	UPTO
1	17420002	1	FLYWEEL Housing		
2	17420025	1	Gasket,REAR		
3	17120062	10	Bolt,w/washer		
4	13327004	2	Bolt DIN 933 M10-1,25-30 8.8 [NP]		
5	13320063	1	Seal Oil		
6	17420067G	2	Stud (Generator)		
7	13127002	2	Nut		
8	53033010	2	Washer GROWER DIN 127-10		
9	17121016	1	Plug, drain		
10	17121013	1	Gasket		
11	13224045	1	Plug		
12	13120032	1	Washer 18-23-1,5 [NP]		

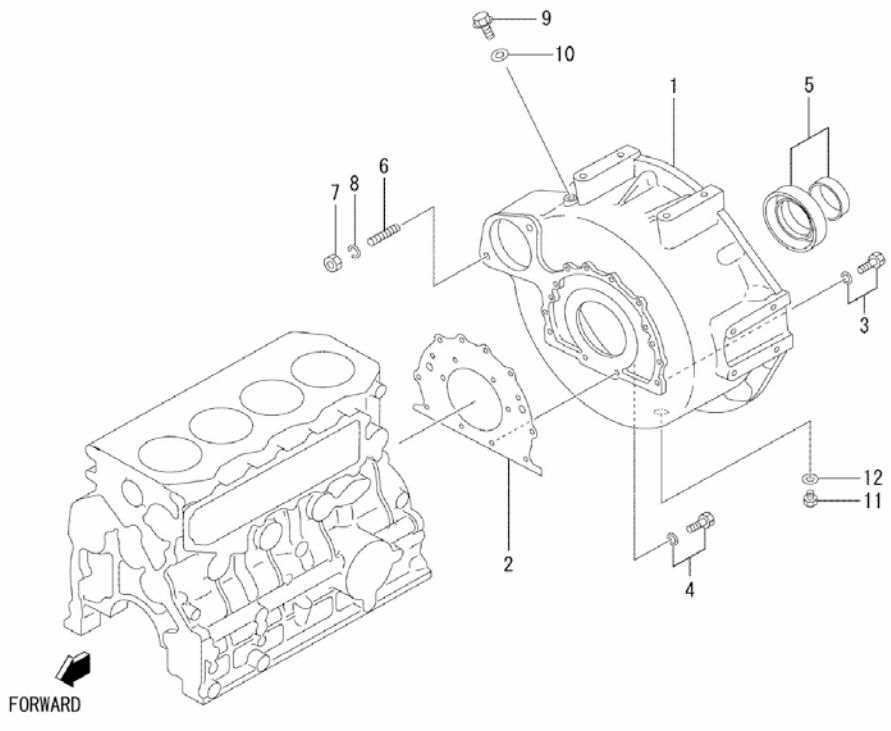

[NP] Not provided

Engine Body

D_MI10_1_8			Piston & Connectiong Rod		
FIG.	REF.	QTY	DESCR.	FROM	UPTO
1	17422001	6	Piston STD.		
2	17422002	6	Piston O.S 0,25		
3	17422003	6	Piston O.S 0,50		
4	17422006	6	Ring Set,Piston STD.		
5	17422007	6	Ring,Piston O.S 0,25		
6	17422008	6	Ring,Piston O.S 0,50		
7	17422009	6	Pin,Piston		
8	17422010	12	Ring,SNAP		
9	17422012	6	ROD,CONNECTING		
9A	17122011	12	Nut,connecting rod		
9B	17122013	12	Bolt,connecting rod		
9C	17422033	6	Bushing,Con-Rod		
10	17522014	6	METAL Set,CONROD STD		
11	17522015	6	METAL Set,CONROD -0,25		
12	17522016	6	METAL Set,CONROD -0,50		
13	17522017	6	METAL Set,CONROD -0,75		

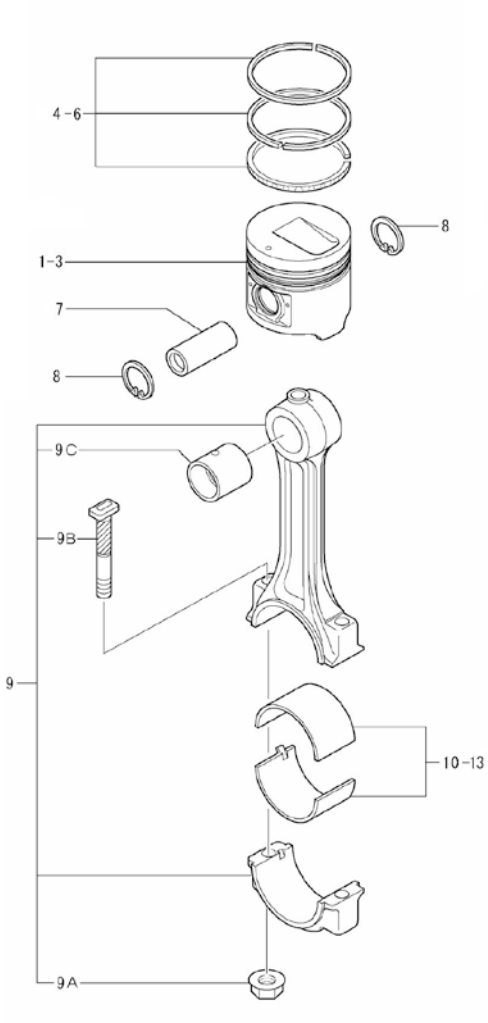

Engine Body

D_MI10_1_9			Crankshaft & Flywheel		
FIG.	REF.	QTY	DESCR.	FROM	UPTO
1	17522018	1	CrankShaft Assy		
1A	13322059	2	Pin		
1B	13322034	2	KEY WOODRUFF		
1C	17422026	1	Nut,CrankShaft		
1D	17422019	1	Gear,CrankShaft		
2	17522024	1	Pulley CrankShaft		
3	17522027	1	Flywheel Assy		
3A	17422029	1	Gear,Ring Z=122		
4	13322065	6	Bolt		
5	53033012	6	Washer GROWER DIN 127-12		
6	17522076	1	Damper,TORSIONAL		
7	17522077	6	Bolt,W/Washer		

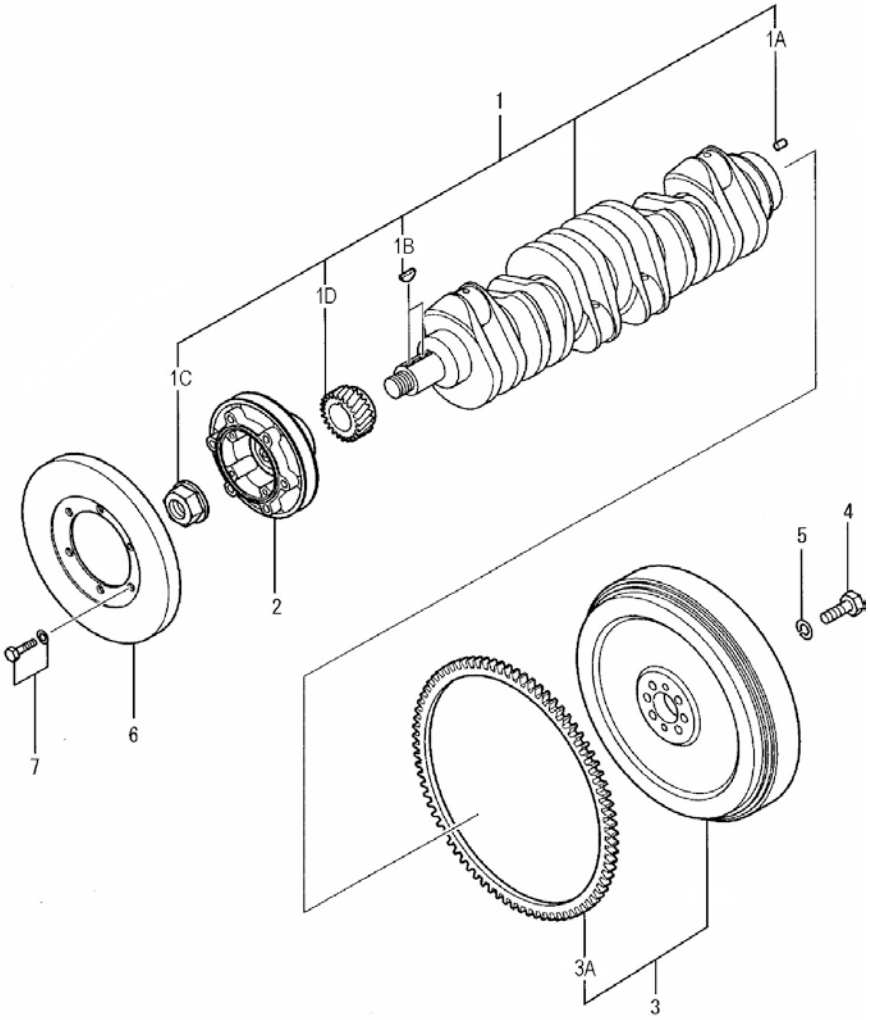

Engine Body

D_MI10_1_10			Oil Sysem		
FIG.	REF.	QTY	DESCR.	FROM	UPTO
1	17524040	1	Pump Assy,Oil		
2	17424055.1	1	O-Ring D. 60X2 [NP]		
3	17121012	4	Bolt, w/washer		
4	13122045	1	Nut		
5	53033010	1	Washer GROWER DIN 127-10		
6	17524052	1	STrainer,Oil		
7	17424060	1	O-Ring D. 22X2,4		
8	17524053	1	STAY,Oil STrainer		
9	13820043	4	Bolt,W/Washer		
10	51030008	2	Washer DIN 125-8		
11	17124071	1	Valve, Assy		
12	17424063	1	Gasket		
13	17524051	1	Oil Filter Element		
14	17524055	1	Screw, Racord		
15	17524056	1	O-Ring D. 40X6		
16	17524059	1	O-Ring D. 95X3		
17	17524057	1	Bracket Assy		
17A	17524054	1	Union		
18	17122051	1	Bolt, w/washer		
19	17524065	1	Cover,CRANKCase		
20	17524062	1	Gasket,Side Cover		
21	17422037G.1	23	Bolt W/Washer (Generator)		

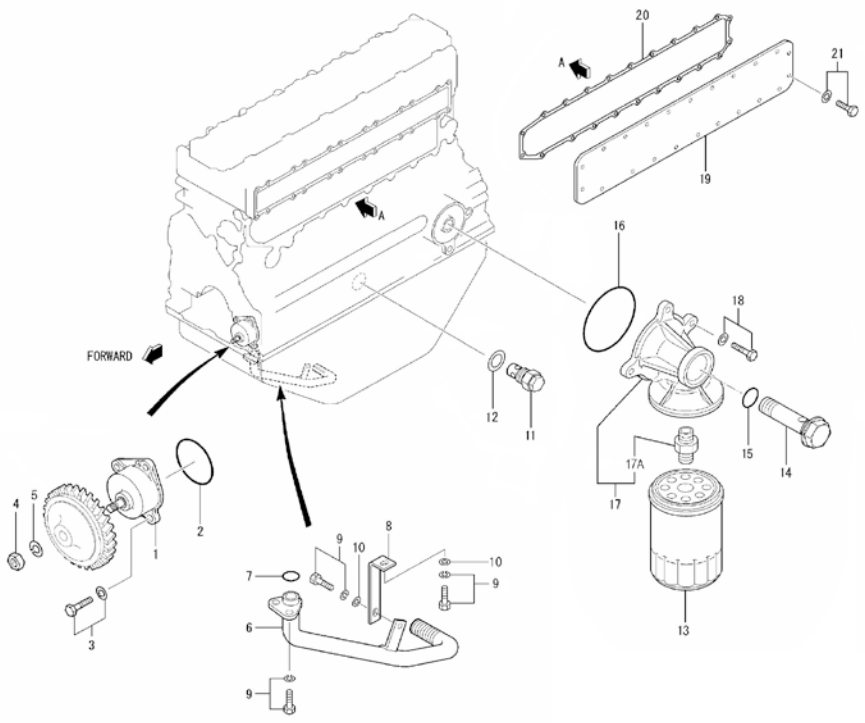

[NP] Not provided

Engine Body

D_MI10_1_11			Oil Pan		
FIG.	REF.	QTY	DESCR.	FROM	UPTO
1	17520030	1	PAN Assy,Oil		
2	13820043	31	Bolt,W/Washer		
3	12814051	1	Screw,eye		
4	56000069	2	Washer 14-20-1,5		
5	18014021	1	Extraction Hose		
6	17520029	1	Gauge Oil LEVEL		
7	17214022	1	Bracket, Pipe		
8	56000217	1	Washer 13-20-3		
9	16514020	1	Plug		
10	14714001	1	Pump,oil Suction		
11	17514001	1	Plug		
12	56000083	1	Washer 21-26-1,5		

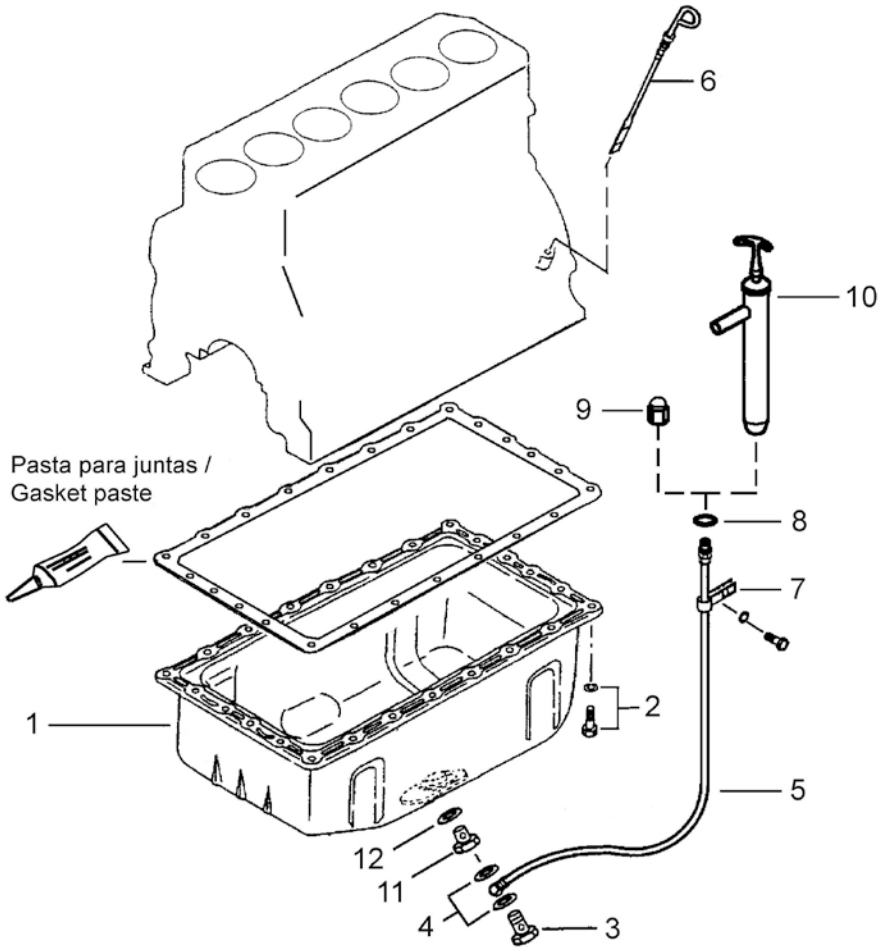

Engine Body

D_MI10_1_12			Engine Brackets		
FIG.	REF.	QTY	DESCR.	FROM	UPTO
1	17410002	2	REAR Bracket		
2	17410001	2	Front Bracket		
3	61665200	4	Anti Vibration Mount Type D 65SHA		
4	53033012	16	Washer GROWER DIN 127-12		
5	52102359	16	Bolt DIN 933 M12-30 8.8		

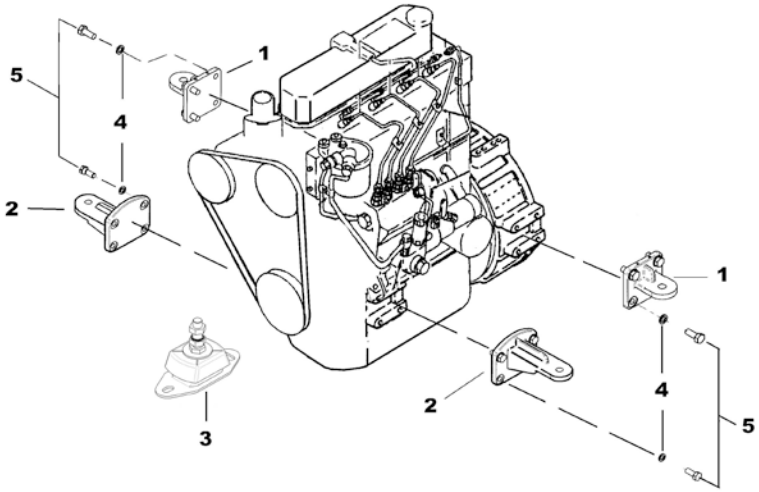

Engine Body

D_MI10_1_13			Bracket, Engine Control		
FIG.	REF.	QTY	DESCR.	FROM	UPTO
1	17519001	1	Bracket,Engine Control		
2	14719013	1	Clamp,cable		
3	55307104	2	Bolt DIN 86 W3/16-10		
4	52102257	2	Bolt DIN 933 M8-20 8.8		
5	53033008	2	Washer GROWER DIN 127-8		
6	16519010	1	Suplement,lever		
7	53033006	2	Washer GROWER DIN 127-6		
8	52102155	2	Bolt DIN 933 M6-12 8.8		
9	14719115	1	Coupling,cable		
10	51030006	1	Washer DIN 125-6		
11	51051107	1	Pin DIN-94 1,6-16		

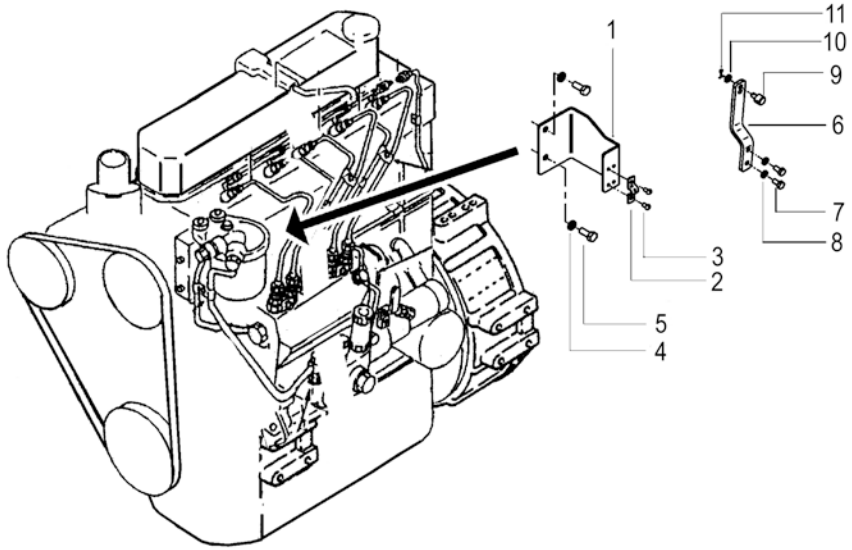

Inlet & Exhaust

D_MI10_2_1			Inlet		
FIG.	REF.	QTY	DESCR.	FROM	UPTO
1	17521030	1	MANIFOld Assy,Inlet		
2	17521032	1	Gasket,IN.MANIFOld		
3	17121014	24	Bolt, w/washer		
4	17421042	1	Gasket		
5	17510015	1	Elbow Spacer		
6	17521029	1	Elbow,Air Inlet		
7	53038008	3	Washer DIN 6798-A 8		
8	52101263	2	Bolt DIN 931 M8-50 8.8		
9	17514010	1	Bracket Clamp		
10	51030008	1	Washer DIN 125-8		
11	53033008	1	Washer GROWER DIN 127-8		
12	52101273	2	Bolt DIN 931 M8-100 8.8		
13	17410030	1	Air Filter Complete		
14	17410031	1	Element,Air Filter		

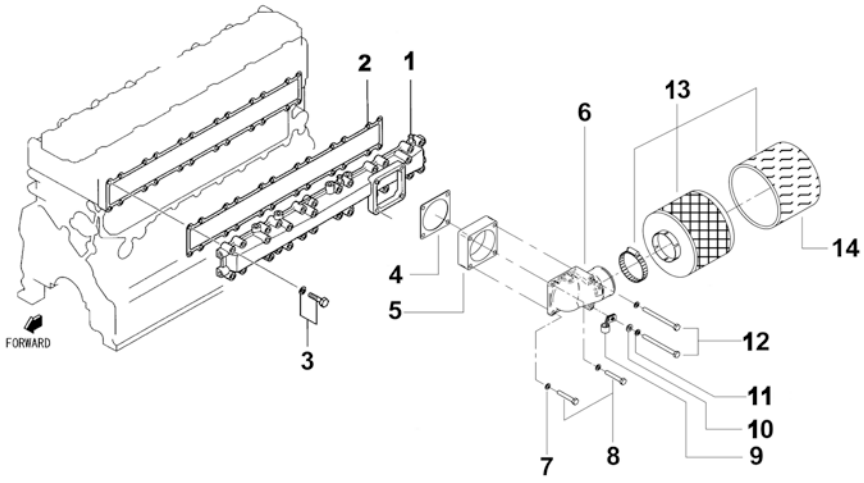

Cooling System

D_MI74_3_1			Water Pump		
FIG.	REF.	QTY	DESCR.	FROM	UPTO
1	17421020	1	Pump Assy,Water		
1A	17421060	2	Bolt,Flange		
1B	17421026G	1	Bolt,Flange		
1C	17421043	1	Cover,Water Pump		
1D	17421022	1	Gasket,Pump Cover		
1E	17421046	1	Plug TAPER 3/8 [NP]		
2	17421041	1	Gasket,Side Cover		
3	17121039	5	Bolt DIN 931 M8-45 8.8 [NP]		
4	17121021	1	Pulley,Water Pump		
5	17121056	4	Bolt DIN 933 M8-15 8.8		
6	17421037	1	Case Assy,Thermostat		
7	13321014	1	Gasket [NP]		
8A	52101268	1	Bolt DIN 931 M8-75 8.8		
8B	53033008	1	Washer GROWER DIN 127-8		
9	17121039	1	Bolt DIN 931 M8-45 8.8 [NP]		
10	17421025	1	Hose,BY-PASS		
11	17121036	2	Clamp, hose		
12	60900980	1	Temperature Sensor		
13	17121016	1	Plug, drain		
14	17121013	1	Gasket		
15	17111021	1	Gasket		
16	17121027	1	Thermostat		
17	17111020	1	FITTING,water outlet		
18	52101263	1	Bolt DIN 931 M8-50 8.8		
19	17421060	1	Bolt,Flange		
20	53038008	2	Washer DIN 6798-A 8		
NS	17427080	1	SWITCH,THERMO [NS]	17/10/2017	

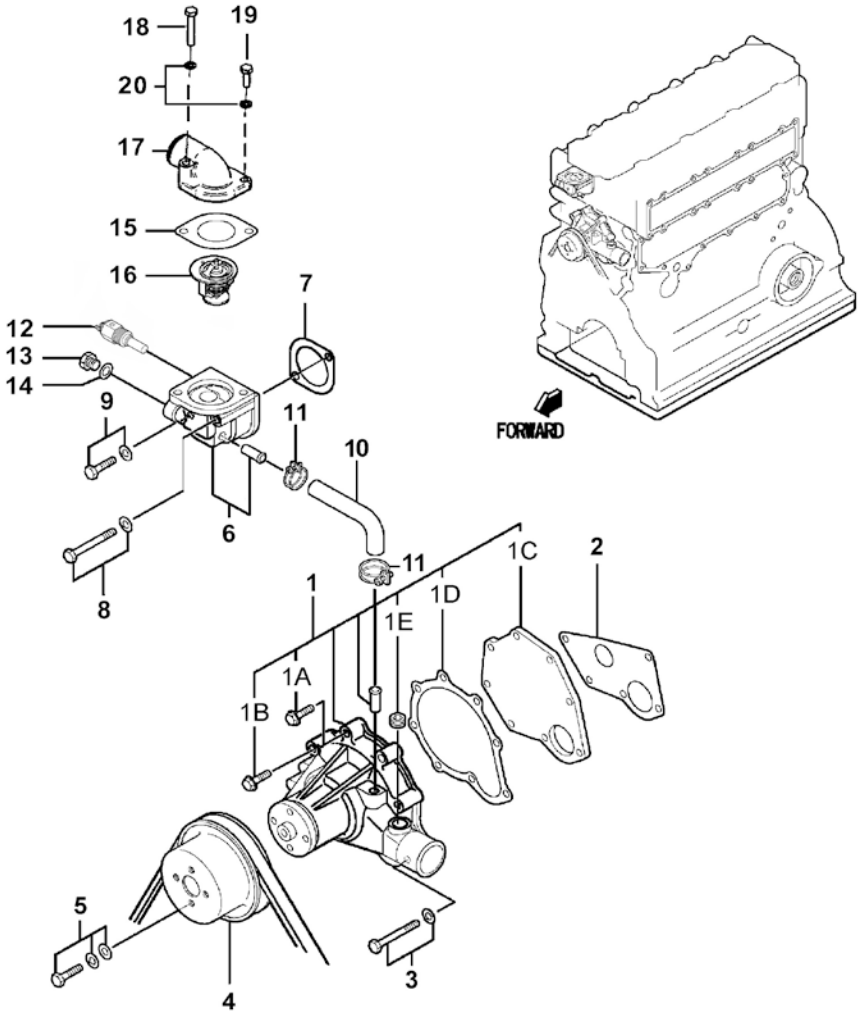

[NP] Not provided
[NS] Not shown

Cooling System

D_MI10_3_2			Cooler Pipes		
FIG.	REF.	QTY	DESCR.	FROM	UPTO
1	17511000	1	Water Cooler Assy SM-105		
2	36511000	1	1" Water Pump, Set		
3	14711021	1	Hose Nº 1		
4	14711029	2	Pipe		
5	54082032	7	Clamp DIN 3017 32-50/12 W4		
6	13211036	1	Pipe 30-40-100		
7	17511011	1	Pipe		
8	17111020	1	FITTING,water outlet		
9	17411013	1	Elbow,Engine Water Exhaust		
10	17111011	1	Elbow 1 1/8"		
11	17511013	1	Elbow		
12	17011022	1	Pipe,from cooler to engine		
13	16711016	1	Rubber Elbow		
14	17411034	1	Hose		
15	54082025	2	Clamp DIN 3017 25-40/12 W4		
16	14711022	1	Hose Nº 2		
17	59071383	1	Clamp TYP.1 38/15 W1		
18	51030006	1	Washer DIN 125-6		
19	52102157	1	Bolt DIN 933 M6-20 8.8		
20	17511014	1	Bracket		
21	52120006	1	Nut DIN 934 M6 8.8		
22	53033006	1	Washer GROWER DIN 127-6		
23	53033008	1	Washer GROWER DIN 127-8		
24	52102259	1	Bolt DIN 933 M8-30 8.8		
25	53038008	1	Washer DIN 6798-A 8		
26	52101263	1	Bolt DIN 931 M8-50 8.8		
27	17421035	1	Gasket,Exhaust MANIFOld		
28	17521035	1	Gasket		
29	17411015	12	Stud		
30	56000057	12	Washer 8-13-1,5		
31	55122008	12	Nut DIN 1587 M8		

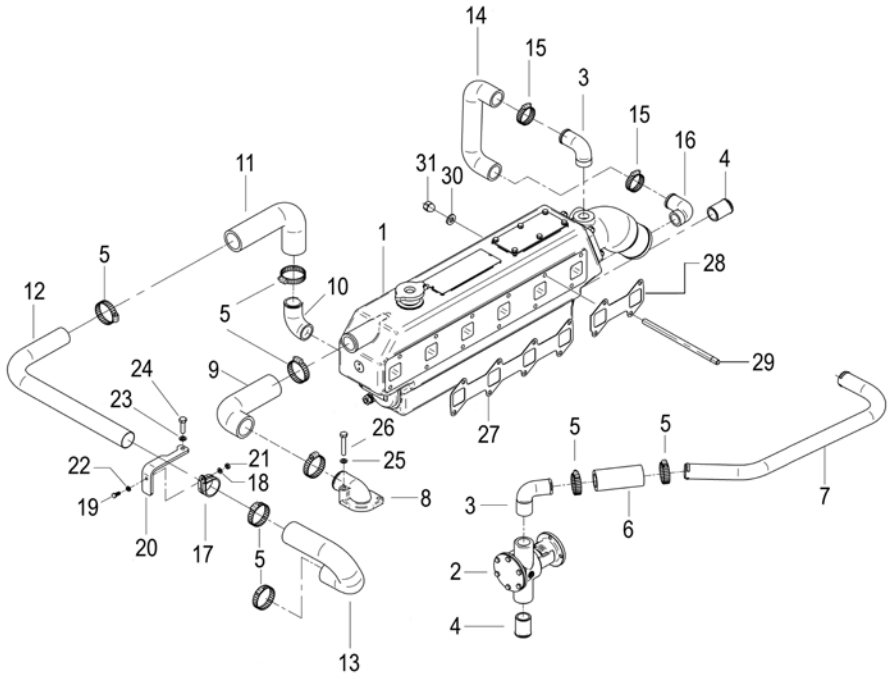

Cooling System

	17511000		Water Cooler Assy SM-105		
FIG.	REF.	QTY	DESCR.	FROM	UPTO
1	17511001	1	Body, Water Cooler [NP]		
2	17411004	1	Adapter, MTA Cap		
3	13811010	1	Cap		
4	18211002	1	Cover		
5	52102155	6	Bolt DIN 933 M6-12 8.8		
6	53033006	6	Washer GROWER DIN 127-6		
7	17111011	1	Elbow 1 1/8"		
8	56000073	2	Copper Washer 16-23-1,5		
9	12111076	1	Plug		
10	54102306	1	Bolt DIN 933 M10-16 INOX.		
11	56000061	1	Washer 10-16-1,5		
12	19011004	1	Element,water cooler		
13	18011008	2	O-Ring D. 72X3		
14	17411003	1	Cover, water cooler		
15	16511007	4	Stud		
16	51030010	4	Washer DIN 125-10		
17	53033010	4	Washer GROWER DIN 127-10		
18	54120010	4	Nut DIN 934 M10		
19	60180007	1	Outlet Coupling	20/02/2014	
20	14711022	1	Hose Nº 2		
21	18011002	1	Cover Front,water cooler		
22	18011031	1	Engine Anode		
23	18011009	1	Anode Plug		
24	12113092	1	Plug		
25	19613016	4	Turbo Stud M8-M10	31/05/2017	

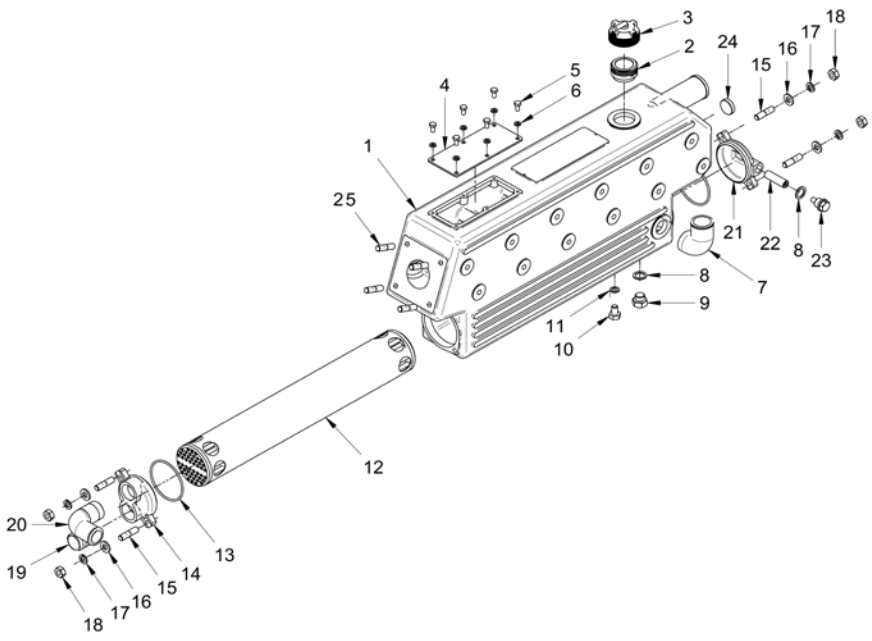

[NP] Not provided

Cooling System

17511001C			Body, Water Cooler and Neck		
FIG.	REF.	QTY	DESCR.	FROM	UPTO
1	17511001	1	Body, Water Cooler [NP]		
2	17411004	1	Adapter, MTA Cap		
3	13811010	1	Cap		
4	12113092	1	Plug		
5	56000073	1	Copper Washer 16-23-1,5		
6	12111076	1	Plug		
7	17111060	1	Plate "SOLE Diesel" [NP]		
8	17111062	2	Bolt		

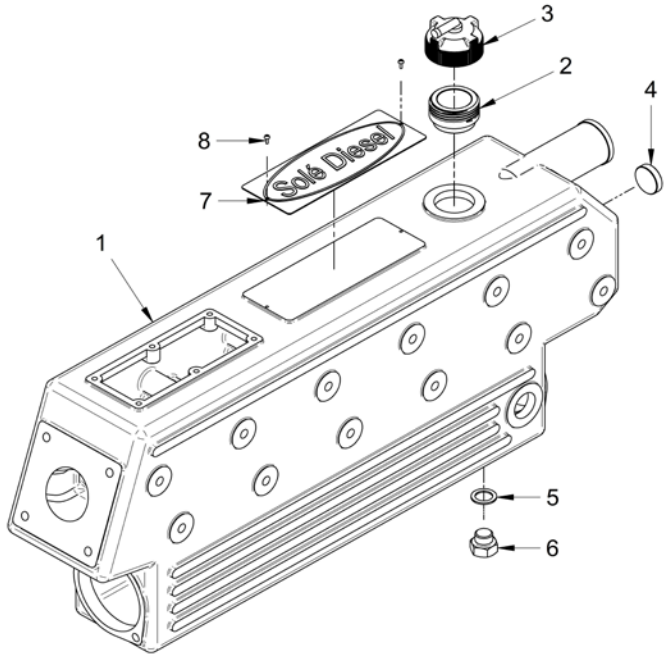

[NP] Not provided

D_MI74_3_3			Wet Exhaust		
FIG.	REF.	QTY	DESCR.	FROM	UPTO
1	16613015	1	Elbow, wet exhaust		
2	16513002	1	Exhaust Elbow Gasket		
3	14711021	1	Hose Nº 1		
4	19613016	4	Turbo Stud M8-M10	31/05/2017	
4	16511007	4	Stud		30/05/2017
5	53033008	4	Washer GROWER DIN 127-8	31/05/2017	
5	53033010	4	Washer GROWER DIN 127-10		30/05/2017
6	55120110	4	Nut DIN 934 M10		30/05/2017
6	54120008	4	Nut DIN 934 M8	31/05/2017	

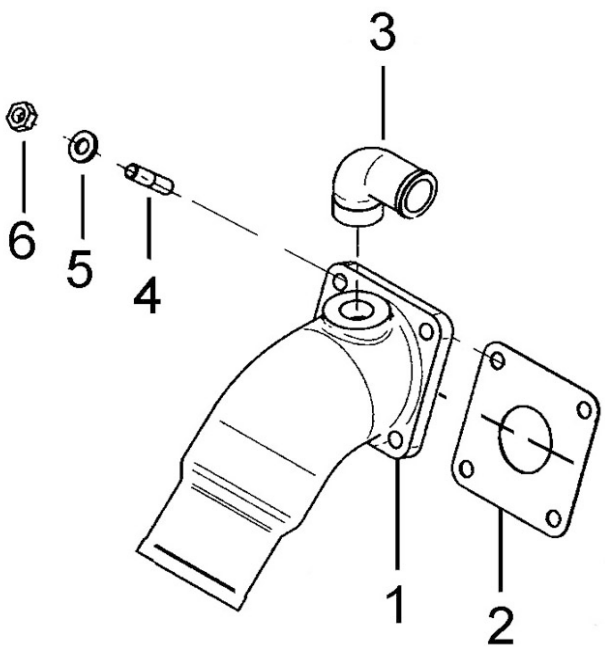

Cooling System

	36511000		1" Water Pump, Set		
FIG.	**REF.**	**QTY**	**DESCR.**	**FROM**	**UPTO**
1	34711002	1	Cover Pump		
2	34711003	1	Gasket Cover		
3	34711041	1	Impeller Plug		
4	34711008	1	1" Impeller		
5	37811005	1	Cam 6,5 mm	23/05/2017	
5	34711005	1	Cam 6,5 mm [NP]		23/05/2017
6	34711026	1	Plate,Friction		
7	54040016	1	CIRClip E-16		
8	36511018	1	Washer,seal		
9	36511019	1	Seal		
10	33311013	1	O-Ring D. 15X2		
11	36511001	1	Body,water pump		
12	36511017	1	Pin,Dowel	18/05/2007	
13	54108154	1	Bolt DIN 84 M6-10		
14	54102154	6	Bolt DIN 933 M6-10 INOX		
15	36511010	1	Shaft,pump		
16	36511015	1	Spacer 17X24X7		
17	33311014	2	Ball Bearing 6203		
18	53040017	1	CIRClip DIN 471 E-17		
19	36511020	1	Seal 16-30-7		
20	53041040	1	CIRClip DIN 472 I-40		

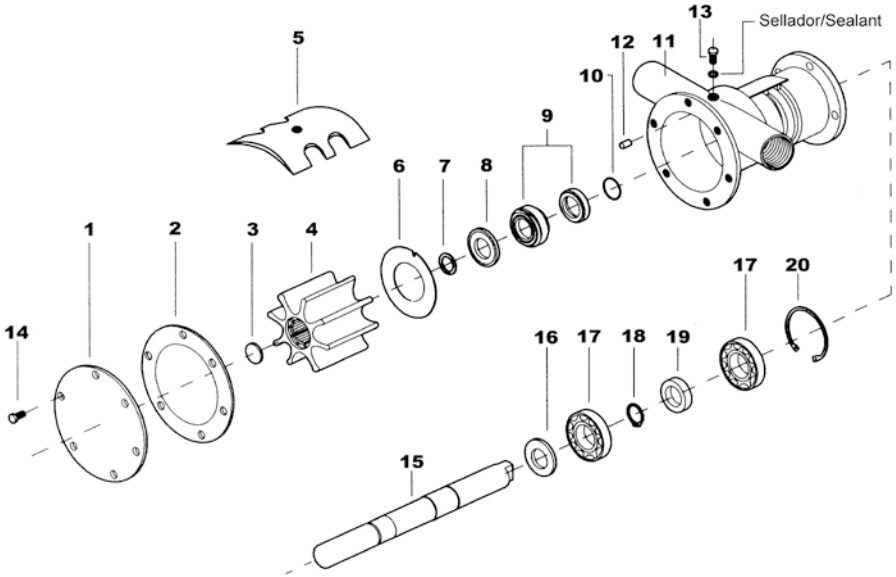

[NP] Not provided

Fuel System

	D_MI10_4_1		Fuel Pipe		
FIG.	REF.	QTY	DESCR.	FROM	UPTO
1	17525001	1	Pump Assy,Fuel Injection		
1A	D_MI10_4_3	1	Fuel Injection Pump [NP]		
1B	D_MI10_4_4	1	Governor Parts [NP]		
1C	D_MI74_4_6	1	Feed Pump [NP]		
1D	13325203	1	SLEEVE LIMIT		
1E	13325274	1	Nut DIN 934 M12 8.8 [NP]		
1F	13325268	1	KEY WOODRUFF		
1G	13325273	1	Washer		
1H	17425003	1	Bolt,W/Washer		
1I	17425004	6	Bolt,W/Washer		
2	17425036	1	Bolt,Flange		
3	17424027	1	JOINT,EYE		
4	17425005	1	Flange,INJ.Pump		
5	17420047	1	O-Ring D. 140X2		
6	17425028	1	Gasket		
7	17425029	4	Bolt,W/Washer		
8	17121012	1	Bolt, w/washer		
9	17424032	1	Connector		
10	17524033	1	Pipe,Oil		
11	52102157	1	Bolt DIN 933 M6-20 8.8		
12	13824024	6	Nut		
13	17524034	1	Bracket,INJ Pump		
14	17120049	1	Nut M8		
15	13321016	1	Washer GROWER DIN 127-8 [NP]		
16	13824013	6	Injector Washer		
17	17524015	1	Pipe Injection N.1		
18	17524016	1	Pipe Injection N.2		
19	17524019	1	Pipe Injection N.3		
20	17524022	1	Pipe Injection N.4		
21	17524023	1	Pipe Injection N.5		
22	17524024	1	Pipe Injection N.6		
23	17424025G.1	6	Gasket Fuel Return (Genset)		
24	17424025	2	Bolt,W/Washer		
25	13124018	6	Clamp (A)		
26	13124017	4	Clamp (B)		

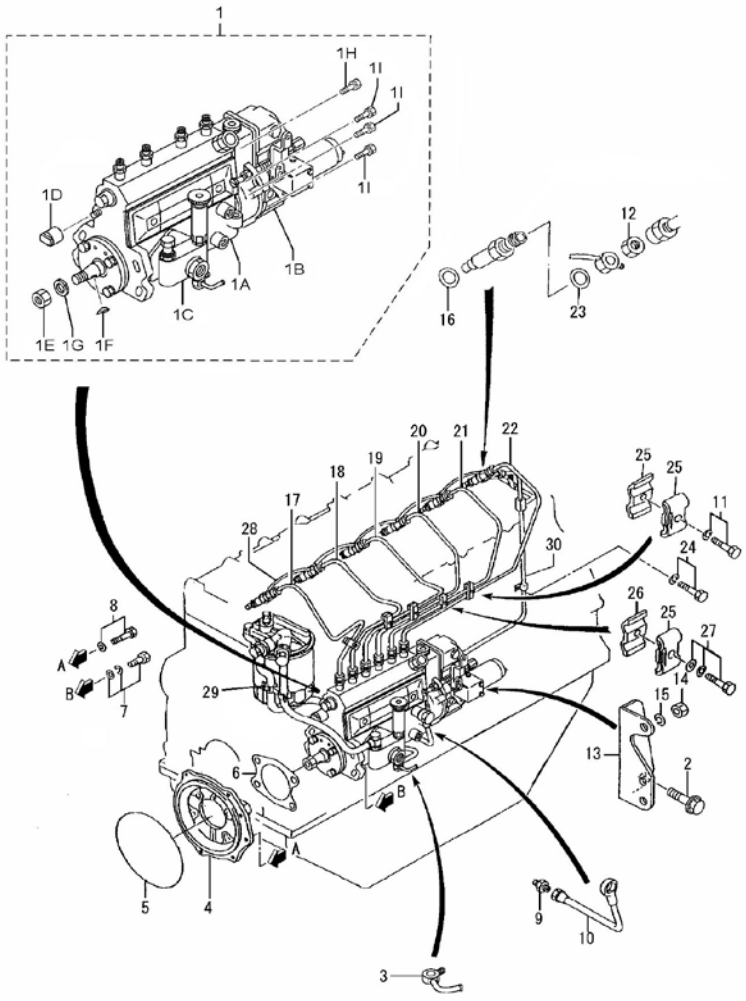

[NP] Not provided

D_MI10_4_1			Fuel Pipe		
FIG.	REF.	QTY	DESCR.	FROM	UPTO
27	17524025	4	Bolt,W/Washer		
28	17524004	1	Assy,Fuel Return		
29	17424026	1	Clamp,Pipe		
30	17524005	1	Pipe,Fuel		

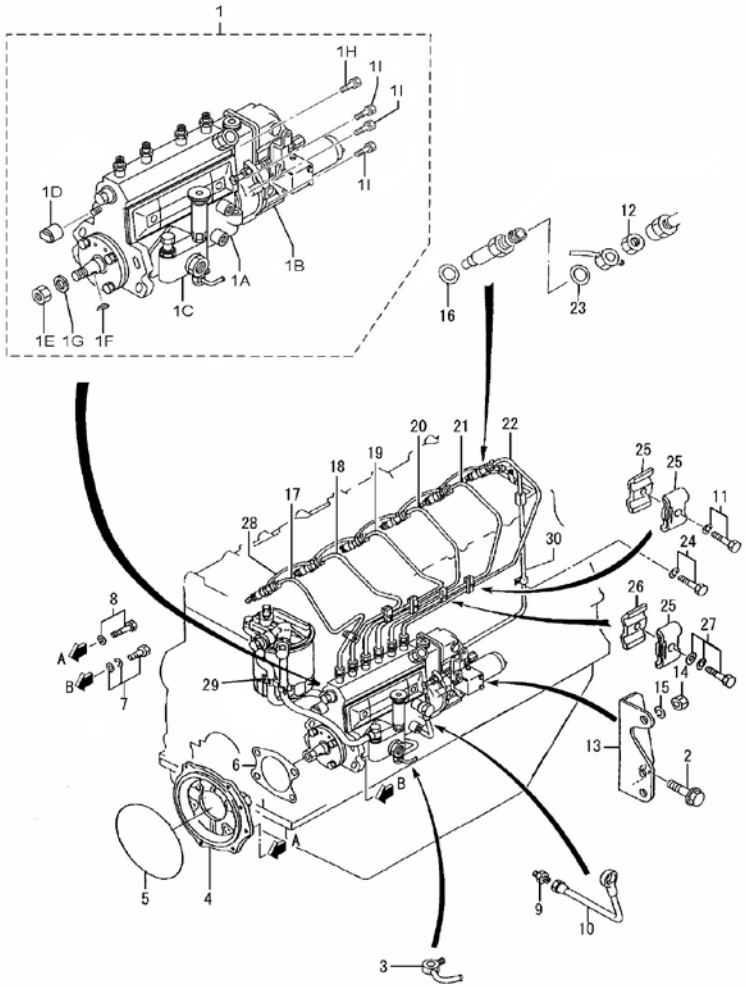

D_MI10_4_2			Injection Nozzle		
FIG.	REF.	QTY	DESCR.	FROM	UPTO
1	17126001	6	Nozzle, Assy		
2	17126003	6	Holder		
2A	17126002	6	Body, Assy		
2B	13826003	6	Pin Pressure		
2C	17126004	6	Spring, pressure		
2D	17126006	6	Nut, retaining		
2E	13826007	6	PIECE DISTANCE		
2FA	17126020	0	Washer 0.900 [VAR]		
2FAA	13826016	0	Washer 1,55 [VAR]		
2FAB	17126047	0	Washer 1.575 [VAR]		
2FAC	13826017	0	Washer 1,60 [VAR]		
2FAD	17126049	0	Washer 1.625 [VAR]		
2FAE	13826019	0	Washer 1,65 [VAR]		
2FAF	17126051	0	Washer 1.675 [VAR]		
2FAG	13826020	0	Washer 1,70 [VAR]		
2FAH	17126053	0	Washer 1.725 [VAR]		
2FAI	17126054	0	Washer 1.750 [VAR]		
2FAJ	17126055	0	Washer 1.775 [VAR]		
2FAK	17126056	0	Washer 1.800 [VAR]		
2FAL	17126057	0	Washer 1.825 [VAR]		
2FAM	17126058	0	Washer 1.850 [VAR]		
2FAN	17126059	0	Washer 1.875 [VAR]		
2FAO	17126060	0	Washer 1.900 [VAR]		
2FAP	17126061	0	Washer 1.925 [VAR]		
2FAQ	17126062	0	Washer 1.950 [VAR]		
2FB	17126021	0	Washer 0.925 [VAR]		
2FC	17126022	0	Washer 0.950 [VAR]		
2FD	17126023	0	Washer 0.975 [VAR]		
2FE	17126024	0	Washer 1.000 [VAR]		
2FF	17126025	0	Washer 1.025 [VAR]		
2FG	17126026	0	Washer 1.050 [VAR]		
2FH	17126027	0	Washer 1.075 [VAR]		
2FI	17126028	0	Washer 1.100 [VAR]		
2FJ	17126029	0	Washer 1.125 [VAR]		
2FK	17126030	0	Washer 1.150 [VAR]		

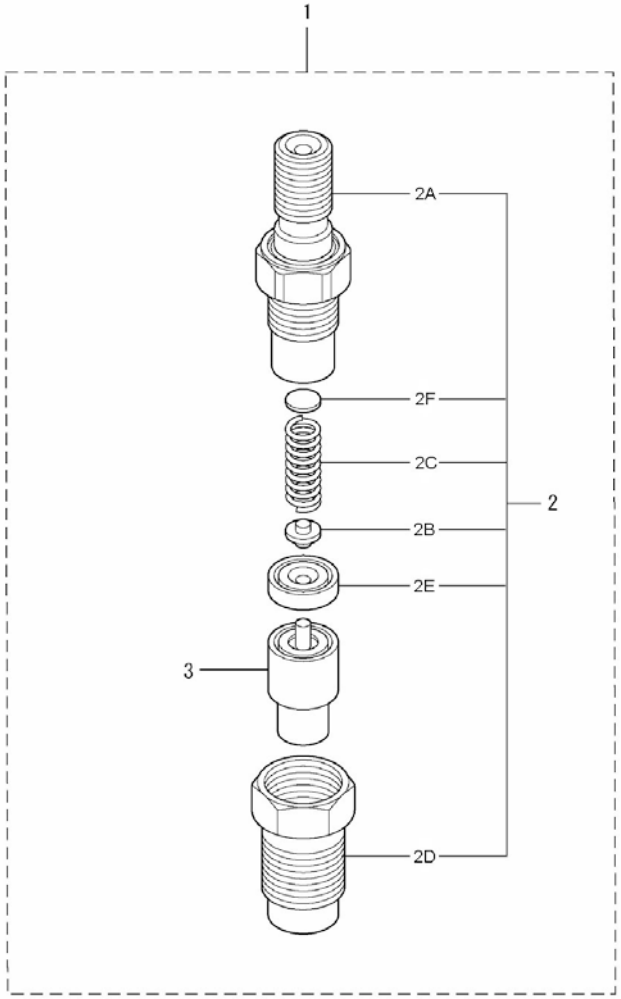

[VAR] Variable according to repair

D_MI10_4_2			Injection Nozzle		
FIG.	REF.	QTY	DESCR.	FROM	UPTO
2FL	17126031	0	Washer 1.175 [VAR]		
2FM	17126032	0	Washer 1.200 [VAR]		
2FN	17126033	0	Washer 1.225 [VAR]		
2FO	13826010	0	Washer 1,25 [VAR]		
2FP	17126035	0	Washer 1.275 [VAR]		
2FQ	13826011	0	Washer 1,30 [VAR]		
2FR	17126037	0	Washer 1.325 [VAR]		
2FS	13826012	0	Washer 1,35 [VAR]		
2FT	17126039	0	Washer 1.375 [VAR]		
2FU	13826013	0	Washer 1,40 [VAR]		
2FV	17126041	0	Washer 1.425 [VAR]		
2FW	13826014	0	Washer 1,45 [VAR]		
2FX	17126043	0	Washer 1.475 [VAR]		
2FY	13826015	0	Washer 1,50 [VAR]		
2FZ	17126045	0	Washer 1.525 [VAR]		
3	13326130	6	TIP Assy Nozzle		

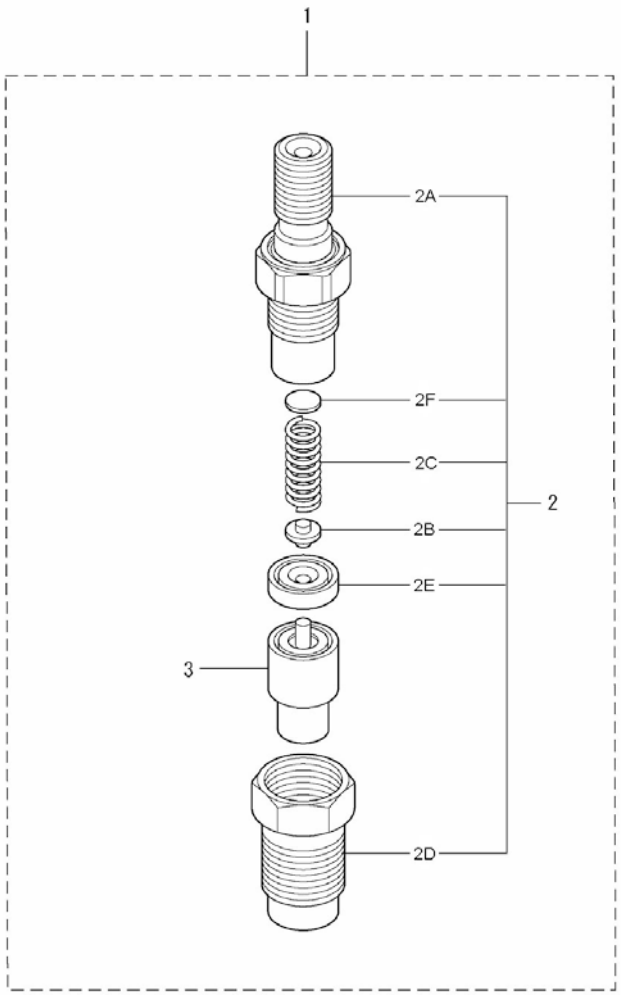

D_MI10_4_3			Fuel Injection Pump		
FIG.	REF.	QTY	DESCR.	FROM	UPTO
1	(*)	2	Not available [NP]		
102	13325239	3	Stud		
103	13325213	1	Washer NIPPLE		
104	13325214	1	NIPPLE		
105	17425014	6	Spring,Valve		
106	17425012	6	Gasket,Valve		
107	17425008	6	Valve,DELIVERY		
108	17425009	6	Element,Pump		
109	13325241	6	PinION Control		
110	13325240	6	Screw		
111	17425015	6	SLEEVE,Control		
112	17425011	6	SHEET,Upper Spring		
113	13325244	6	Spring Plunger		
114	17425013	6	SHEET,LOWER Spring		
115	13325261	6	Tappet Assy		
116	17425022	6	Plug,Screw		
117	13325269	1	CamShaft		
118	13325226	2	Ring		
119	17425032	0	Shim Adjusting T=2.00 [VAR]		
119	13325225	0	Plate 0,5 [VAR]		
119	13325223	0	Plate 0,18 [VAR]		
119	13325222	0	Plate 0,16 [VAR]		
119	17425031	0	Shim Adjusting T=1,50 [VAR]		
119	17425033	0	Shim Adjusting T=0.03 [VAR]		
119	13325224	0	Plate 0,3 [VAR]		
119	13325221	0	Plate 0,14 [VAR]		
119	13325220	0	Plate 0,12 [VAR]		
119	17425030	0	Shim Adjusting T=1.00 [VAR]		
119	13325219	0	Plate 0,1 [VAR]		
120	13325271	1	Cover		
121	17425025	1	Gasket,Bearing Cover		
122	13325211	1	RACK Control		
123	17425027	1	Screw,RACK Guide		
124	17425035	3	Plate		
125	13825031.3	2	Washer,DRAIN Union		

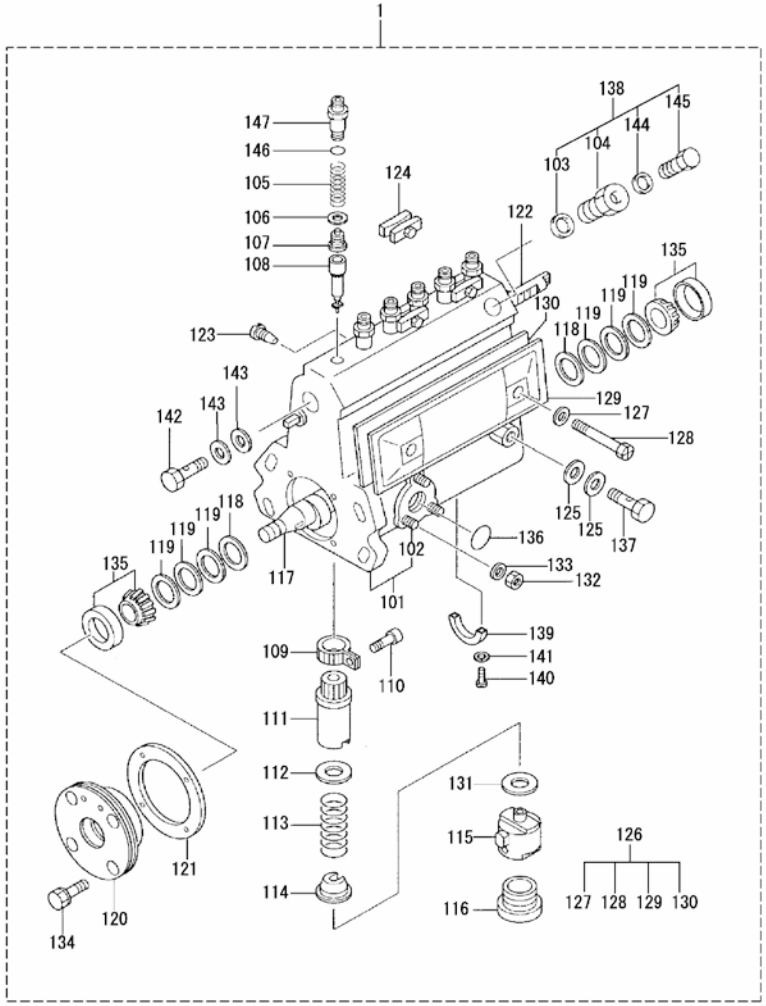

[NP] Not provided

[VAR] Variable according to repair

D_MI10_4_3			Fuel Injection Pump		
FIG.	REF.	QTY	DESCR.	FROM	UPTO
126	17525227	1	Cover SUB Assy		
127	13325215	2	Washer		
128	17425041	2	Screw,HEXAGON		
129	17525229	1	Cover,Plate		
130	17525228	1	Gasket,Cover Plate		
131	13325255	0	Shim T=0.90 [VAR]		
131	13325254	0	Shim T=0.80 [VAR]		
131	13125014	0	Shim T=0.60 [VAR]		
131	13325249	0	Shim T=0.30 [VAR]		
131	13325256	0	Shim T=1.00 [VAR]		
131	13125015	0	Shim T=0.20 [VAR]		
131	13325253	0	Shim T=0.70 [VAR]		
131	13325246	0	Shim T=0.10 [VAR]		
131	13125018	0	Shim T=0.50 [VAR]		
131	13325257	0	Shim T=1.10 [VAR]		
131	13325258	0	Shim T=1.20 [VAR]		
131	13125017	0	Shim T=0.40 [VAR]		
131	13325247	0	Shim T=0.15 [VAR]		
132	17425019	3	Nut		
133	17425007	3	Washer,Spring		
134	13325272	4	Screw		
135	13325217	2	Conical Roller Bearing 30203		
136	13325234	1	O-Ring		
137	13325231	1	Screw, Racord		
138	13325212	1	BREATHER Air		
139	13325235	1	METAL		
140	17525028	2	Screw		
141	13325236	2	Washer		
142	13325201	1	Screw,HOLLOW [NP]		
143	13325202	2	Washer		
144	13325215	1	Washer		
145	13325216	1	Screw		
146	17425010	4	O-Ring		
147	17425046	6	Support SOUPAPE		

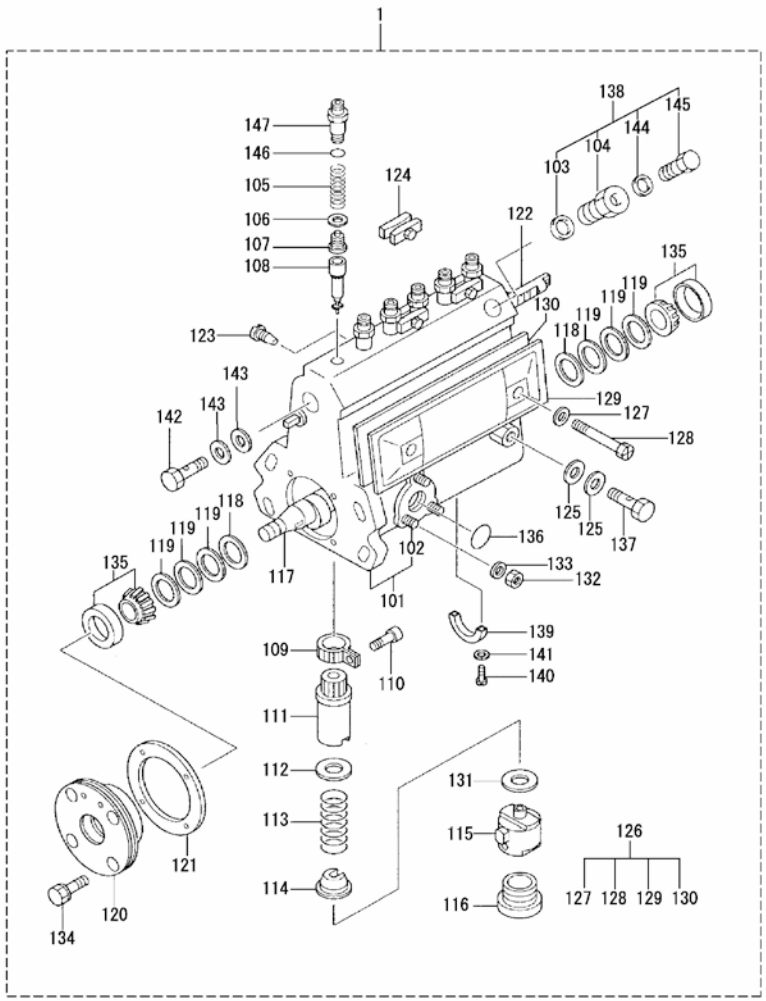

D_MI10_4_4			Governor Parts		
FIG.	REF.	QTY	DESCR.	FROM	UPTO
1	(*)	1	Not available [NP]		
101	17425201	1	Housing,GOverNOR		
102	17425203	1	Plate		
103	17425210	1	Screw,Adjusting		
104	17425208	1	Cover,GOverNOR		
105	17425209	1	Pin		
106	17425210	1	Screw,Adjusting		
107	17425217	1	Nut		
108	17425212	1	Screw,Adjusting		
109	17425213	1	Bushing		
110	17425218	1	Lever,TENSION		
111	17425245	1	Lever,TENSION		
112	17425222	1	Shaft,Lever		
113	17425223	2	Plug,Screw		
114	17425246	1	Pin,SPLIT		
115	17425211	1	Nut,W/Hole		
116	17425211	1	Nut,W/Hole		
117	17425230	1	CapSULE		
118	17425232	1	Nut,Adapter LOCK		
119	17425247	1	SHACKLE		
120	17425239	1	Bearing,Ball		
121	17425205	1	KEY,WOODRUFF		
122	17425235	1	FLYWEIGHT Assy		
123	13325273	1	Washer		
124	17425237	1	Nut,ROUND		
125	17425238	1	SLEEVE,GOverNOR		
126	17425242	4	Washer,Plate T=0.4		
126	17425240	4	Washer,Plate T=0.2		
126	17425241	4	Washer,Plate T=0.3		
126	17425243	4	Washer,Plate T=0.1		
126	17425244	4	Washer,Plate T=1.0		
127	17425250	1	Lever,SWIVELLING		
128	17425227	2	Bushing,Lever		
129	17425226	2	O-Ring		
130	17425251	2	Washer,SNAP		

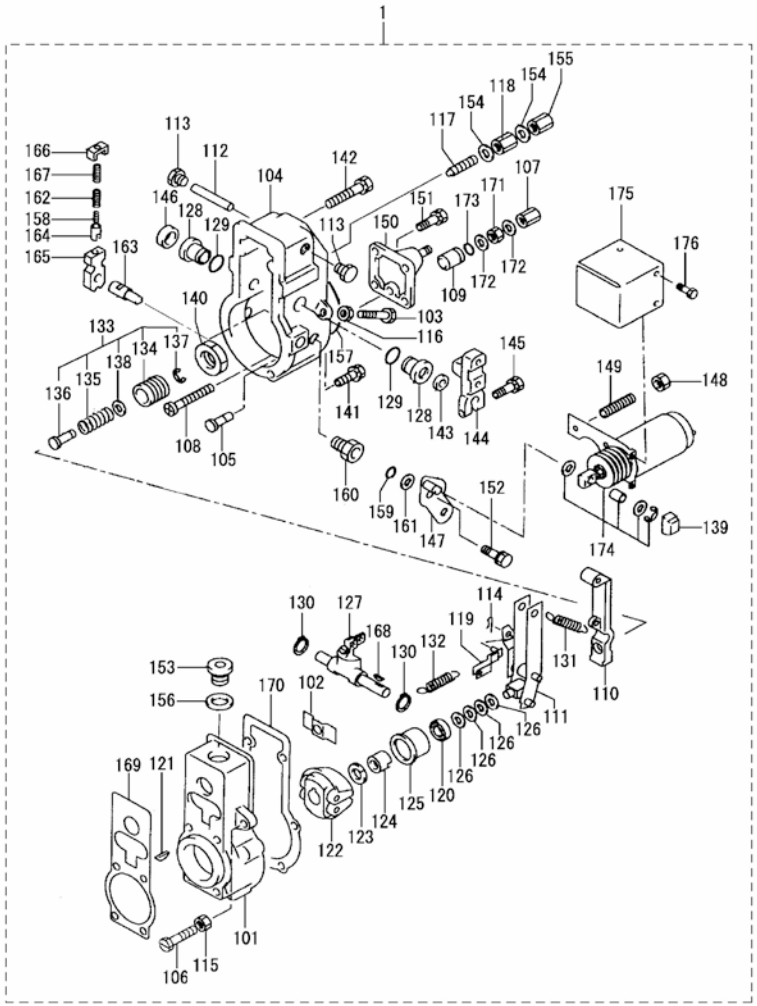

[NP] Not provided

D_MI10_4_4			Governor Parts		
FIG.	REF.	QTY	DESCR.	FROM	UPTO
131	17525220	1	Spring,SPEED Control		
132	17425248	1	Spring,START		
133	17525266	1	Adapter Assy		
134	17425267	1	Screw,Adapter [NP]		
135	17525284	1	Spring,Mechanical		
136	17425283	1	Adapter		
137	17025033	1	Washer		
138	17425285	1	Washer T=0.10		
138	17425287	1	Washer T=0.50		
138	17425286	1	Washer T=0.25		
138	17525289	1	Washer		
138	17425288	1	Washer T=0.20		
139	17525265	1	Cover		
140	17425292	1	Nut		
141	17425255	4	Bolt,W/Washer		
142	17425300	2	Bolt,W/Washer		
143	17425229	1	Seal,Oil		
144	17425224	1	Lever,Adjusting		
145	17425225	1	Bolt,W/Washer		
146	17425228	1	Cap,Lever		
147	17425259	1	Lever,Stop		
148	17425268	3	Nut,HEXAGON		
149	17425269	3	Bolt,Stud		
150	17425296	1	Plate,Cover		
151	17425297	1	Bolt,W/Washer		
152	17425260	1	Bolt,W/Washer		
153	17425206	1	Plug,Screw		
154	13325213	2	Washer NIPPLE		
155	17425233	1	Nut,Cap		
156	17425207	1	Washer,COPPER Plate		
157	17425295	1	Packing,Rubber Plate		
158	17425276	1	Spring		
159	17425257	1	O-Ring		
160	17425256G	1	Bushing,Bearing (Generator)		

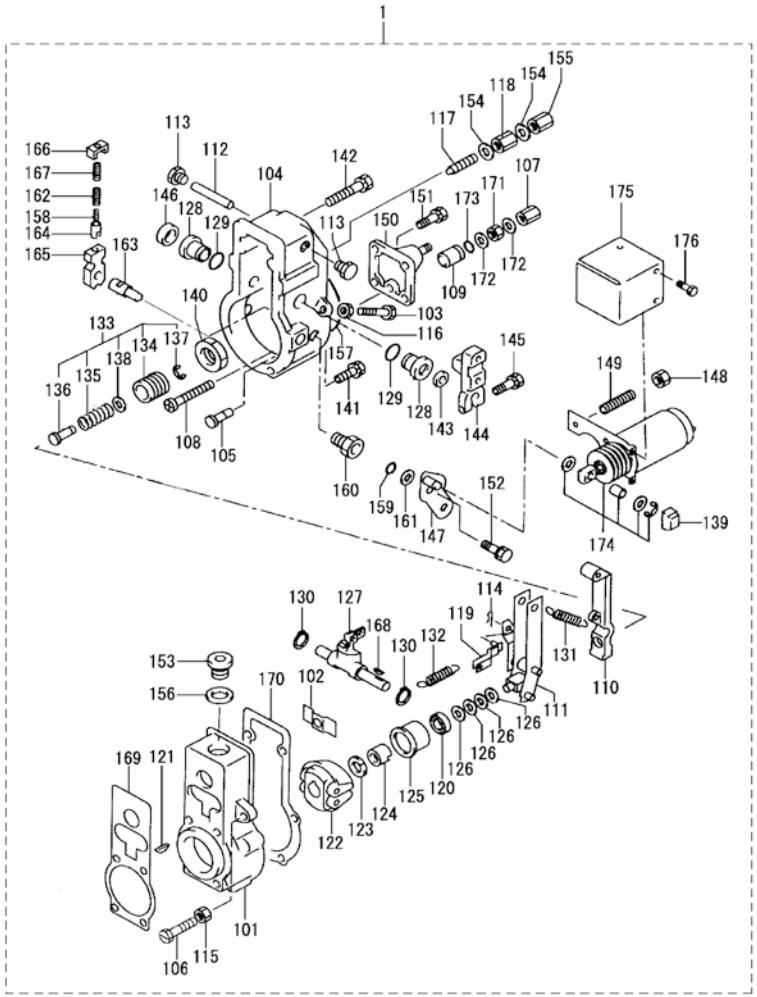

D_MI10_4_4.2			Governor Parts		
FIG.	REF.	QTY	DESCR.	FROM	UPTO
161	17425258	1	Shim Adjusting [NP]		
162	17425275	1	Spring		
163	17425279	1	Shaft,GOverNOR		
164	17425277	1	SHEET,spring		
165	17425278	1	Lever,Support		
166	17425273	1	Plate,Cap		
167	17425274	1	Spring		
168	17425252	1	KEY,WOODRUFF		
169	17425204	1	Gasket		
170	17425202	1	Gasket		
171	17425215	1	Nut,HEXAGON		
172	17425025	2	Gasket,Bearing Cover		
173	17425214	1	O-Ring		
174	17425264	1	Stop SOLENOID		
175	17425280	1	Plate		
176	17425281	3	Bolt,W/Washer		

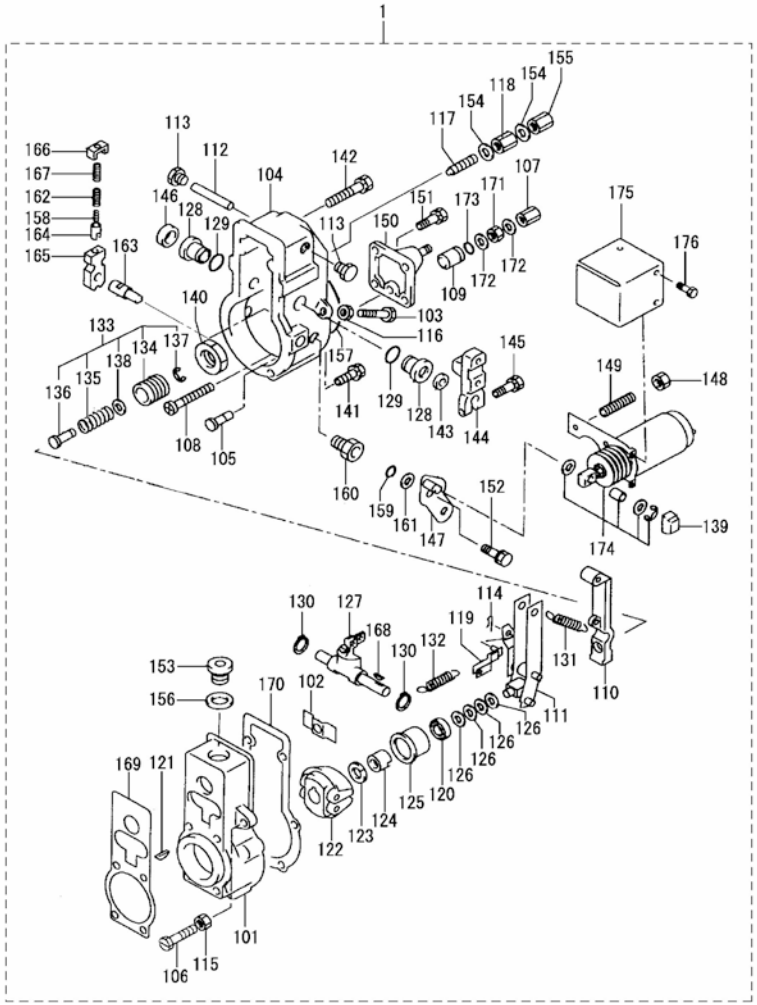

[NP] Not provided

Fuel System

D_MI74_4_5			Fuel Filter		
FIG.	REF.	QTY	DESCR.	FROM	UPTO
1	17424020	1	Fuel Filter Assy		
2	17424001	1	Bracket,Fuel Filter		
3	17414022	1	Gas-Oil Filter Element		
4	17424003	2	Bolt,EYE		
5	17424008	4	Washer,SealING		
6	13324072	1	Plug		
7	13324011	1	Washer		
8	17424002	1	Bracket,Fuel Filter		
9	17121012	2	Bolt, w/washer		
10	17120062	2	Bolt,w/washer		
11	17424007	1	Hose,Fuel		
12	13324068	1	Hose		
13	17424026	1	Clamp,Pipe		

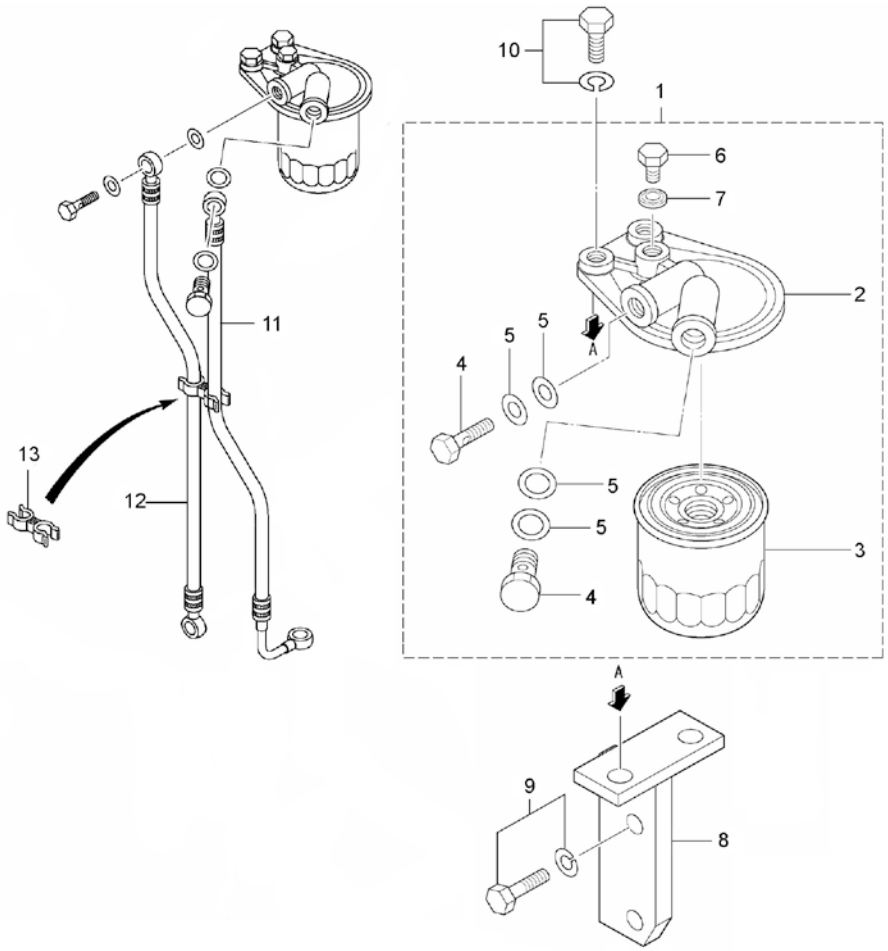

D_MI74_4_6			Feed Pump		
FIG.	REF.	QTY	DESCR.	FROM	UPTO
1	13325100	1	Pump Feed		
2	13325107	1	Housing Feed Pump		
3	13325120	1	ROD,PUSH		
4	13325106	2	Valve		
5	13325105	2	Spring		
6	13325104	2	Washer		
7	13325103	1	Support		
8	17425102	1	Pump S/Assy,PRIMING		
9	13325112	1	Screw, Racord		
10	17425106	4	Washer,Pipe Union		
11	13325115	1	Tappet		
12	13325118	1	Roller		
13	13325117	1	Pin,Roller		
14	13325116	2	Block		
15	13325119	2	Ring		
16	13325110	1	Spring		
17	13325109	1	Washer		
18	13325108	1	Plug		
19	13325113	1	Filter		
20	13325111	1	Piston		
21	17425105	1	Srew,Hollow		
NS	17425121	1	Seal,Oil [NS]		

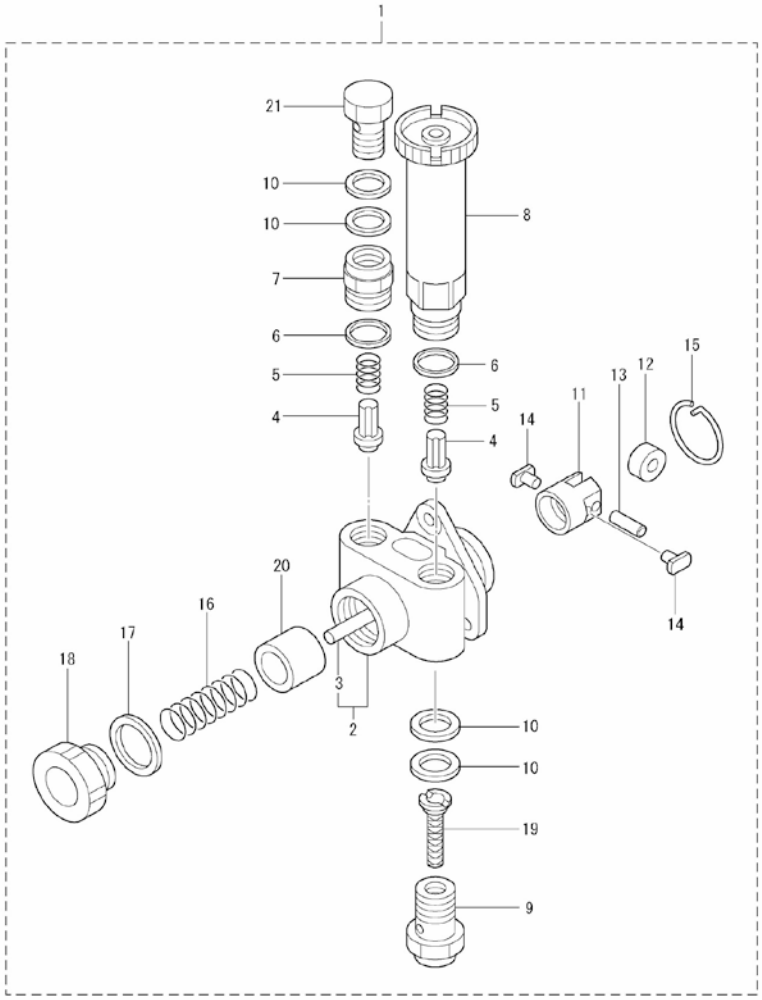

[NS] Not shown

12V Electrical System

D_MI10_5_1			Kit Alternator 14V/110A		
FIG.	REF.	QTY	DESCR.	FROM	UPTO
1	17417019P	1	Kit Alternator 14V/95A ISKRA [NP]		
2	17427007	1	Plate,Adjusting		
3	17427002.2	1	Bracket,Alternator		
4	17121012	2	Bolt, w/washer		
5A	52202309	2	Bolt DIN 933 M10-1,25-30 8.8		
5B	53038010	2	Washer DIN 6798-A 10		
6	51031008	1	Washer DIN 9021 8		
7	13827012	1	Bolt		
8	17521028	1	Belt Type AX 45 1175		

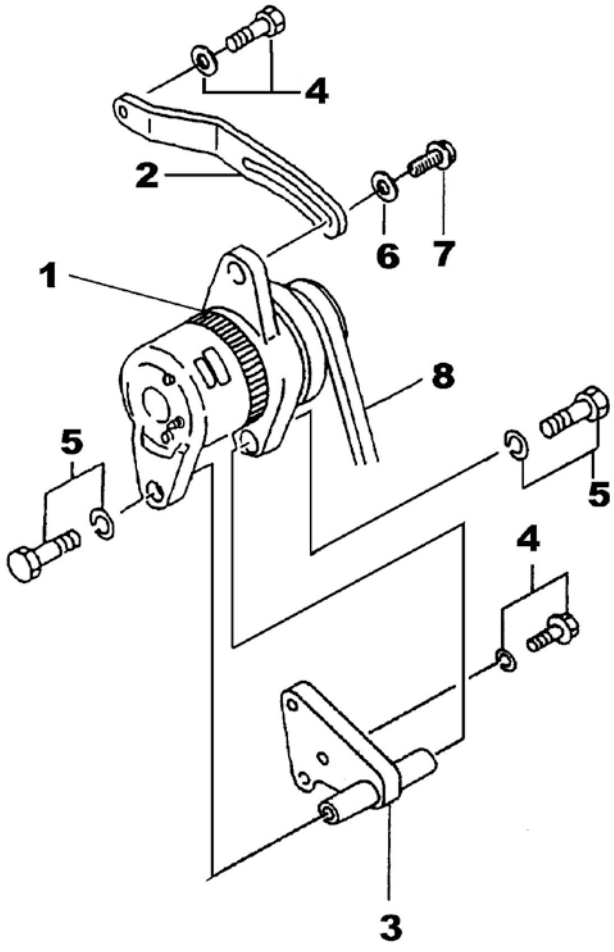

[NP] Not provided

12V Electrical System

17417053			Kit Alternator 14V/95A ISKRA		
FIG.	**REF.**	**QTY**	**DESCR.**	**FROM**	**UPTO**
1	17427002.4	1	Bracket, Alternator 14V/95A		
2	17417026	1	Alt. 14V/95A		
3	52102259	1	Bolt DIN 933 M8-30 8.8		
4	51031008	1	Washer DIN 9021 8		
5	53033008	1	Washer GROWER DIN 127-8		
6	52120008	2	Nut DIN 934 M8 8.8		
7	17417025	1	Spacer 13.5x10.2x11	09/09/2015	
8	53038010	1	Washer DIN 6798-A 10		
10	52101325	1	Bolt DIN 931 M10-120 8.8		
11	17117016.7	1	Pulley		
12	13817017	1	Spacer 17X28X5,5		
13	51030005	2	Washer DIN 125-5		
15	52120005	1	Nut DIN 934 M5 8.8		
16	TR.10.8	1	Ring Terminal 10 Sec.		
17	51030008	1	Washer DIN 125-8		

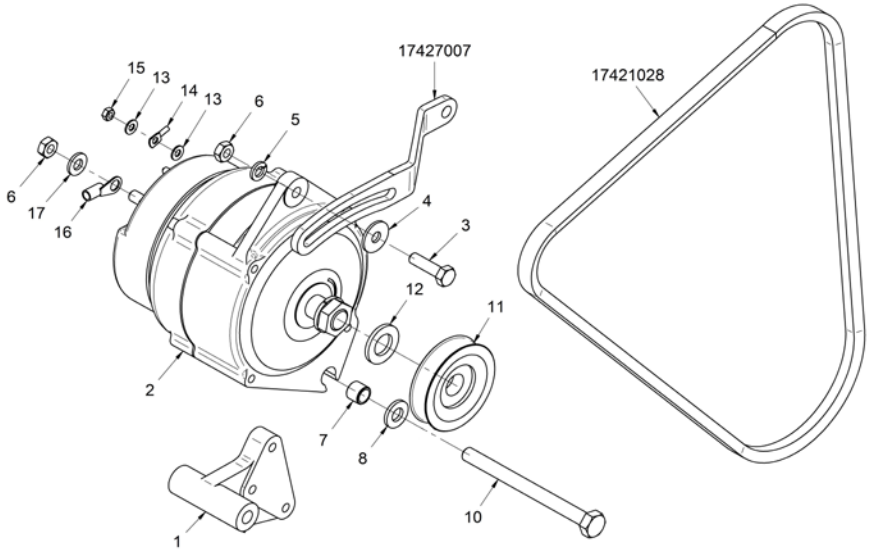

	D_MI10_5_3		Starter		
FIG.	**REF.**	**QTY**	**DESCR.**	**FROM**	**UPTO**
1	17527001	1	Starter Assy 12 V		

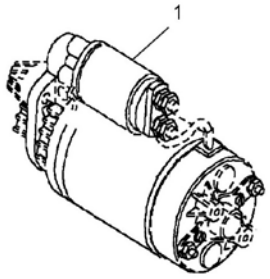

12V Electrical System

D_MI10_5_5			12V Electrical Wiring		
FIG.	REF.	QTY	DESCR.	FROM	UPTO
1	60974125.2	1	Panel TE3 MINI-74/SM-105		
2	60900931	4	SOCKET,WEDGE BASE		
3	60900929	4	Bulb 12V		
4	60900925R	1	VOLTMETER 12 V		
5	60974910	1	TACHOMETER MINI-74		
6	60900920R	1	Oil Pressure Gauge 12 V		
7	54108003	1	Bolt DIN 84 M3-8 INOX.		
8	60900119	1	Fuse 0.5A		
9	60900301.2	1	Integrated Circuit Plate 12V Protection	23/06/2015	
10	60900915R	1	Water Gauge 12 V		
11	60990006	1	Gasket Panel		
12	60900037	1	Key-Locking		
13	60900038	1	Cover,KEY		
14	60990005	1	Panel N.3		
15	60900121	1	FuseHolder, panel		
16	60900118	1	Fuse 10 A.		
17	60900036	1	Key,Starter Switch		
18	60975201R.2	1	SM-105 Electrical Wiring		
19	60985210	1	Engine Wiring Ext. 4 M.		
20	17527018	1	Plate Glow Plug		
21	17127017	6	Plug, glow		
22	17425264	1	Stop SOLENOID		
23	17417001	1	Support, Relay		
24	13817005	1	Relay 6V		
25	52102104	1	Bolt DIN 933 M5-10 8.8		
26	51030005	1	Washer DIN 125-5		
27	52102156	2	Bolt DIN 933 M6-16 8.8		
28	51030006	2	Washer DIN 125-6		
29	17527005	1	Relay 12V 200A		

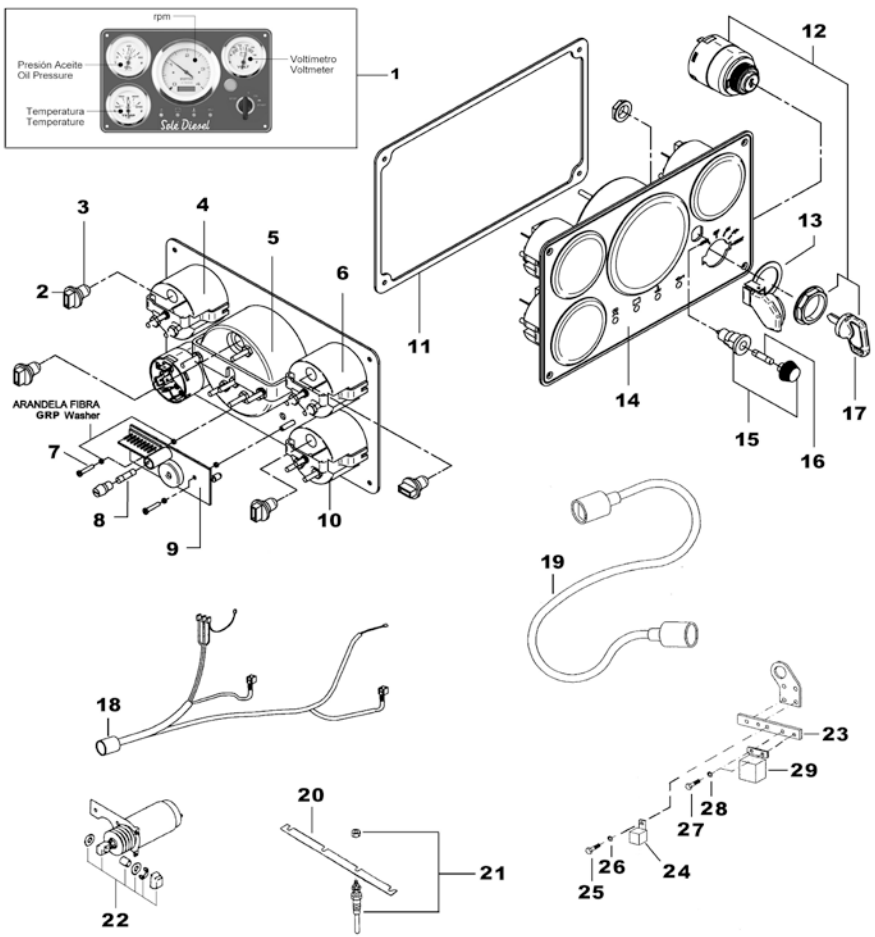

12V Electrical System

D_60974130			SVT 30 MINI-74/SM-105 Panel		
FIG.	REF.	QTY	DESCR.	FROM	UPTO
1	54108003	2	Bolt DIN 84 M3-8 INOX.		
2	60900037	1	Key-Locking		
3	60900037.2	1	Connector		
4	60900910.2	5	Nut 8-32 W/CapTIVE STAR Washer		
5	60900931	4	SOCKET,WEDGE BASE		
6	60900929	4	Bulb 12V		
7	60990005.1	1	Panel N.3		
8	60990006.1	1	Gasket Panel		
9	60900096	1	Cover Plate for Motor Propeller		
10	60900301.2	1	Integrated Circuit Plate 12V Protection		
11	60900910.1	1	MTG Bracket 3" LG GA AMEGA		
12	60900915.2	3	MTG Bracket		
13	60900941	1	VOLTMETER 12V		
14	60974911	1	Tachometer MINI-74/105 SVT		
15	60900937	1	Water Gauge 12 V		
16	60900939	1	Oil Pressure Gauge 12V		
NS	60900091	1	MICRO Relay 12V 12-20 [NS]		
NS	60910014	1	System Back Panel SVT/MVT 30 12V [NS]	07/12/2016	

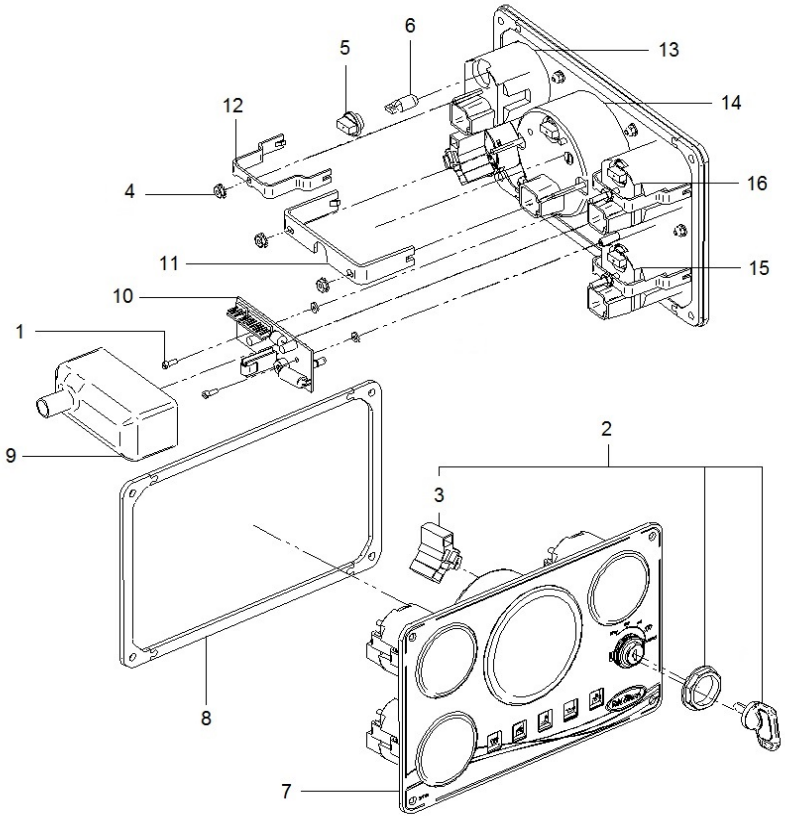

[NS] Not shown

D_MI74_6_1			Kit Alternator 28V/55A		
FIG.	REF.	QTY	DESCR.	FROM	UPTO
1	17417024	1	Alternator 28V/55A		
2	17427007	1	Plate,Adjusting		
3	17427002.2	1	Bracket,Alternator		
4	17121012	2	Bolt, w/washer		
5A	52202309	2	Bolt DIN 933 M10-1,25-30 8.8		
5B	53038010	2	Washer DIN 6798-A 10		
6	51031008	1	Washer DIN 9021 8		
7	13827012	1	Bolt		
8	17521028	1	Belt Type AX 45 1175		
9	17417022	1	Pulley		
NS	17117022	1	Pulley Alternator, Type A [NS]	18/07/2017	

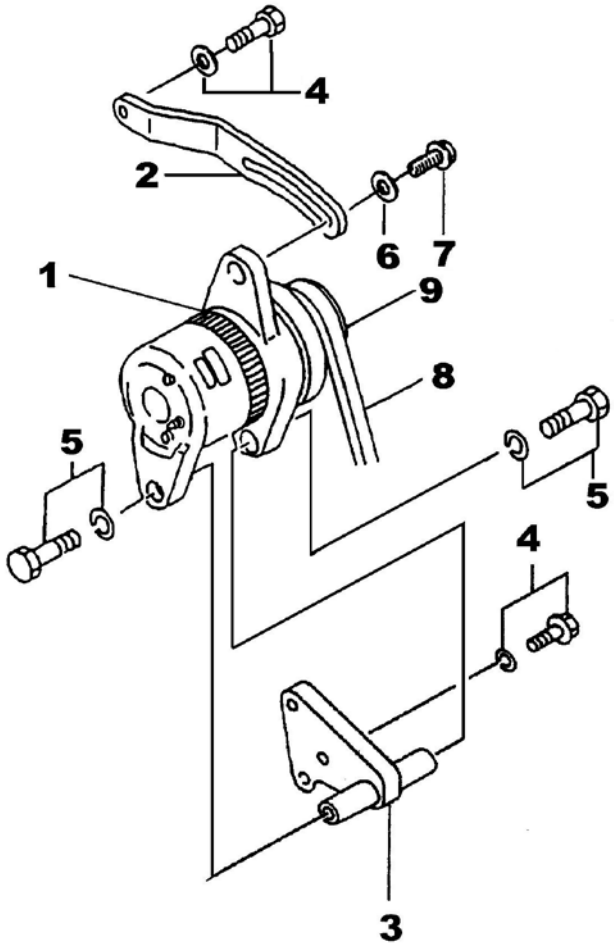

[NS] Not shown

	D_MI10_6_3		Starter 24V		
FIG.	**REF.**	**QTY**	**DESCR.**	**FROM**	**UPTO**
1	17527001.2	1	Starter Assy 24V		

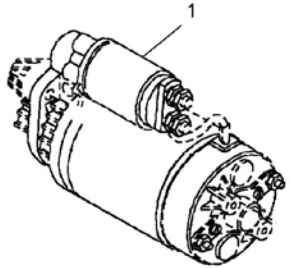

24V Electrical System

D_MI10_6_5			24V Electrical Wiring		
FIG.	REF.	QTY	DESCR.	FROM	UPTO
1	60975125.2	1	Panel TE3 MINI-74/SM-105 24V		
2	60900931	4	SOCKET,WEDGE BASE		
3	60900930	4	Bulb GE400 WEDGE BASE 24V		
4	60900926R	1	VOLTMETER 24 V		
5	60975911	1	TACHOMETER SM-105 24V.		
6	60900921R	1	Oil Pressure Gauge 24 V		
7	54108003	1	Bolt DIN 84 M3-8 INOX.		
8	60900119	1	Fuse 0.5A		
9	60900302.1	1	Integrated Circuit Plate 24V		
10	60900916R	1	Water Gauge 24 V		
11	60990006	1	Gasket Panel		
12	60900037	1	Key-Locking		
13	60900038	1	Cover,KEY		
14	60990005	1	Panel N.3		
15	60900121	1	FuseHolder, panel		
16	60900118	1	Fuse 10 A.		
17	60900036	1	Key,Starter Switch		
18	60900933	2	VOLTAGE REDUCER 7W		
19	60900932	1	VOLTAGE REDUCER 5W 100 ohm TE		
20	17427018	1	Plate Glow Plug		
21	17527017.2	6	Glow Plug 24V		
22	17525264.2	1	Stop SOLENOID 24V		
23	17417001	1	Support, Relay		
24	17417005.1	1	Relay 24V 24-22A		
25	52102104	1	Bolt DIN 933 M5-10 8.8		
26	51030005	1	Washer DIN 125-5		
27	52102156	1	Bolt DIN 933 M6-16 8.8		
28	51030006	1	Washer DIN 125-6		
29	17417005	1	Relay 24V 24-100		
30	60975201R.2	1	SM-105 Electrical Wiring		
31	60985210	1	Engine Wiring Ext. 4 M.		

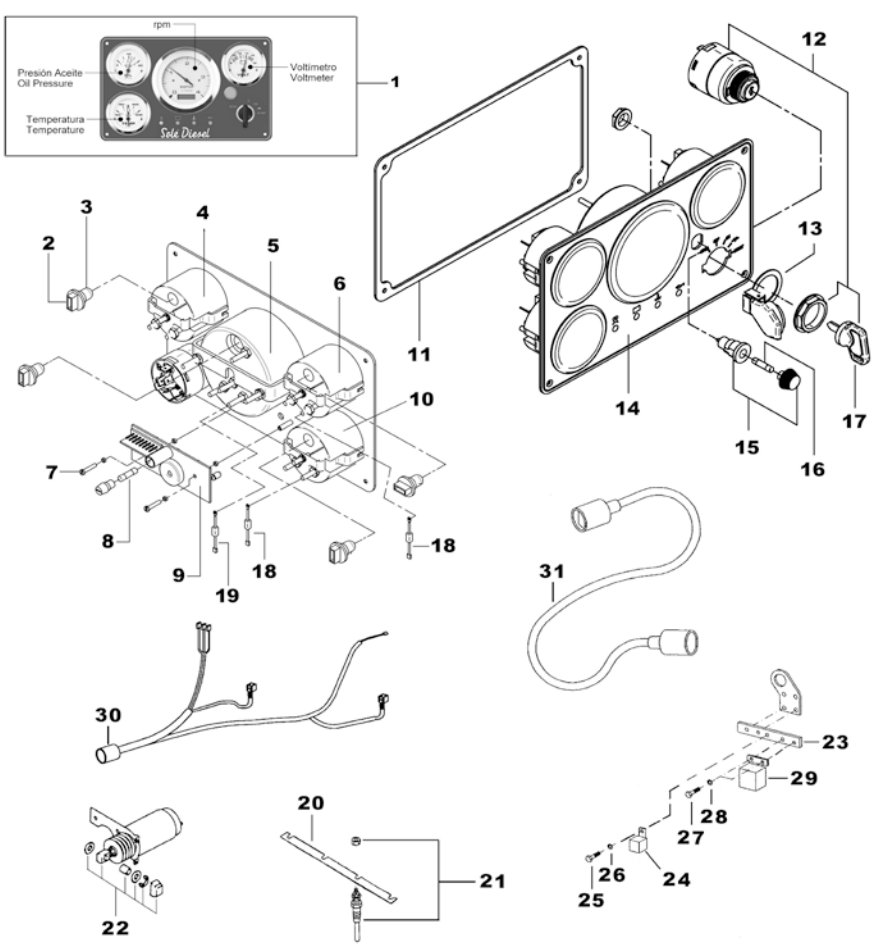

Maintenance Kit

D_17520101			Gasket Kit		
FIG.	REF.	QTY	DESCR.	FROM	UPTO
1	17520101	1	Gasket Kit		
2	17111021	2	Gasket		
3	13321014	1	Gasket [NP]		27/07/2009
4	18011008	2	O-Ring D. 72X3		
5	16513002	1	Exhaust Elbow Gasket		
6	17420040	1	Gasket,Gear		
7	17424060	1	O-Ring D. 22X2,4		
8A	17421035	1	Gasket,Exhaust MANIFOld		
8B	17521035	1	Gasket		
9	17420018	1	Gasket,Front Plate		
10	17521010	1	Gasket,Rocker Cover		
11	33311013	1	O-Ring D. 15X2		
12	13324011	1	Washer		
13	34711003	1	Gasket Cover		
14	13310013	1	Gasket,water pump		
15	17420047	2	O-Ring D. 140X2		
16	17121013	2	Gasket		
17	17421011	1	Gasket		
18	17422054	12	Seal,Valve Stem		
19	17421022	1	Gasket,Pump Cover		
20	17421041	1	Gasket,Side Cover		
21	17521004	1	Cylinder Head Gasket		
22	17424055.1	1	O-Ring D. 60X2 [NP]		
23	17521032	1	Gasket,IN.MANIFOld		
24	17421042	1	Gasket		
25	17524062	1	Gasket,Side Cover		
26	17424025G.1	6	Gasket Fuel Return (Genset)		
27	13824013	6	Injector Washer		
28	17420025	1	Gasket,REAR		
29	17425028	1	Gasket		
30	17420112	2	Seal,Valve		
31	17424008	10	Washer,SealING		

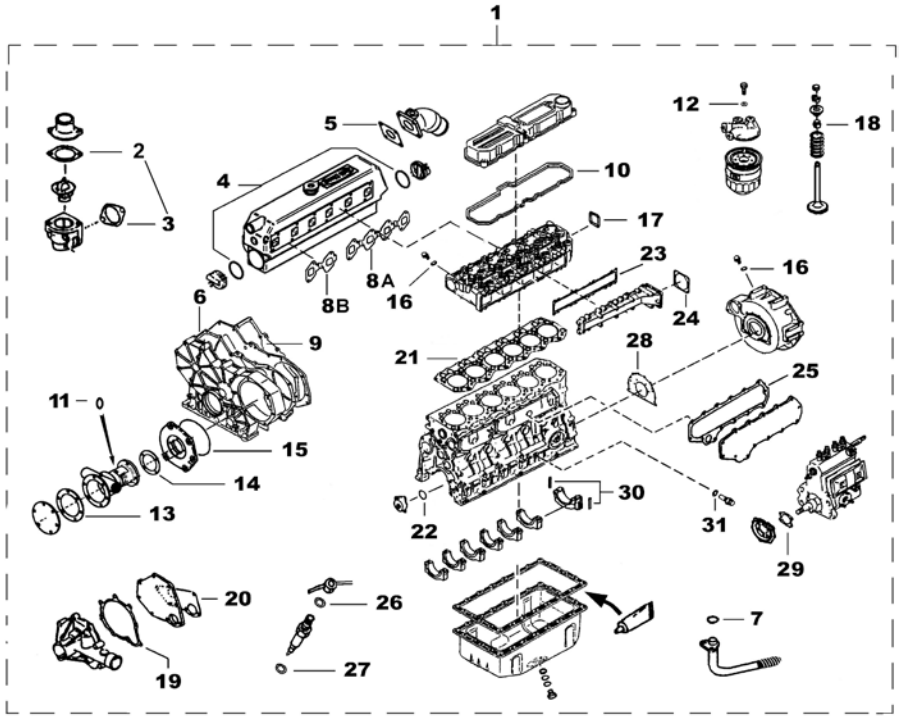

[NP] Not provided

Maintenance Kit

17511100			Pipe Rubber Set,Water Line		
FIG.	REF.	QTY	DESCR.	FROM	UPTO
1	17411013	1	Elbow,Engine Water Exhaust		
2	16711016	1	Rubber Elbow	03/10/2014	
3	13211036	1	Pipe 30-40-100		
4	17511013	1	Elbow		
5	17411034	1	Hose		
NS	17511009	1	Hose [NS]		
NS	15312007	2	Cover, water cooler D 30 [NS]		

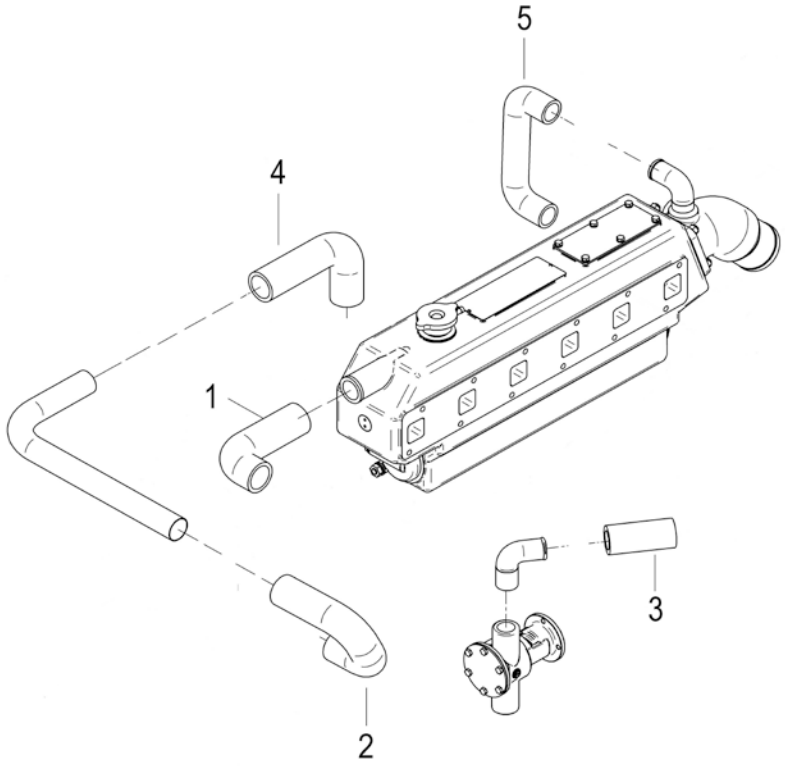

[NS] Not shown

Maintenance Kit

17520101.1			Gasket Kit		
FIG.	REF.	QTY	DESCR.	FROM	UPTO
1	17521004	1	Cylinder Head Gasket		
2	17521010	1	Gasket,Rocker Cover		
3	17521032	1	Gasket,IN.MANIFOld		
4A	17421035	1	Gasket,Exhaust MANIFOld		
4B	17521035	1	Gasket		
5	17422054	12	Seal,Valve Stem		
6	17111021	1	Gasket		

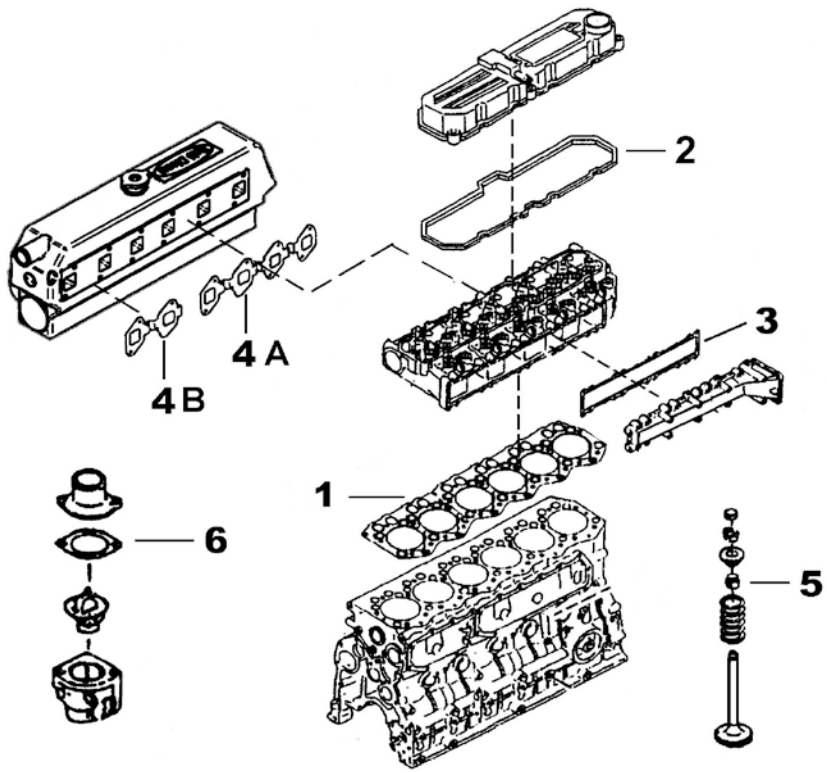

Maintenance Kit

36511000K			Repair Kit Water Pump 1"		
FIG.	REF.	QTY	DESCR.	FROM	UPTO
1	34711008	1	1" Impeller		
2	34711003	1	Gasket Cover		
3	36511020	1	Seal 16-30-7		
4	36511019	1	Seal		
5	33311013	1	O-Ring D. 15X2		
6	13310013	1	Gasket,water pump		

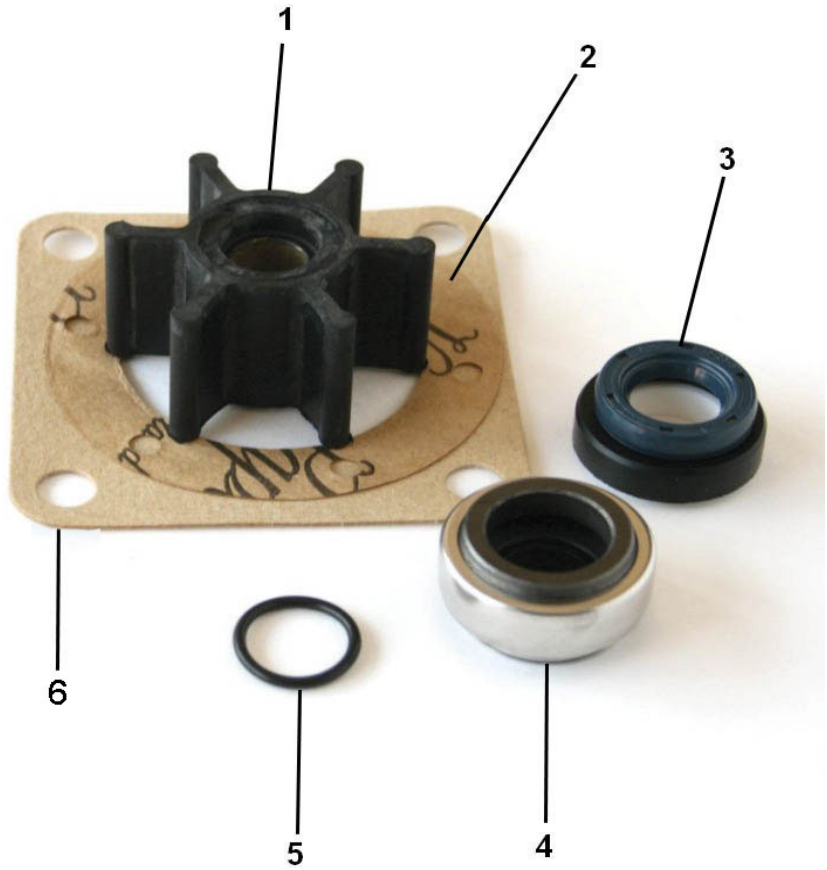

Gearbox TM-485A1

	D_5025_1		Sheet 1/4		
FIG.	**REF.**	**QTY**	**DESCR.**	**FROM**	**UPTO**
3	24873001.1	1	Housing TM 485A1 [NP]		
6	24870102.1	1	Cover		
7	24870007.1	1	Cover		
23	24870080.1	1	BULKHead		
40	24870008.1	1	Gauge Oil LEVEL		
41	24870043	1	Pump Assy Oil		
43	24810506	1	Screw		
46	24870045.1	1	Screw [NP]		
47	24870046.1	1	Screw		
49	24810011	3	Plug,oil drain		
50	24830017	1	Plug		
63	24810088	3	Washer 14-20-1,5 [NP]		
64	24830016	1	Washer 18-23-1,5 [NP]		
65	24850092	1	Washer		
68	24850093	16	Washer		
69	24810044	7	Bolt DIN 933 M6-16 8.8 [NP]		
71	24830025	8	Bolt DIN 933 M8-35 8.8 [NP]		
79	24810527	1	SCREW, RACORD		

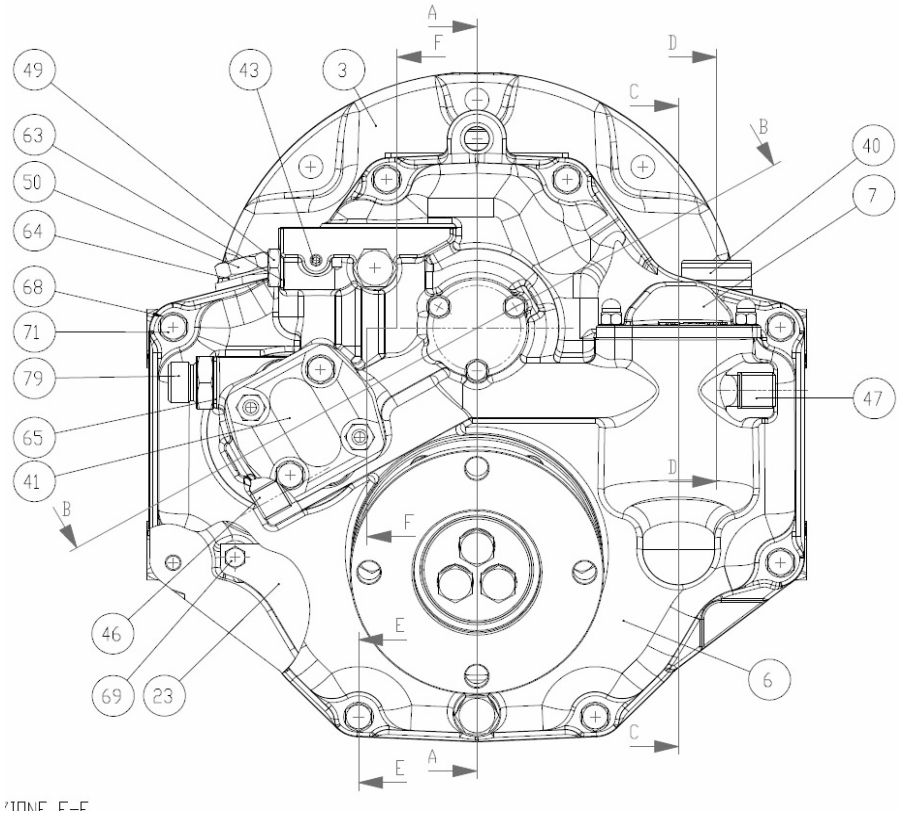

[NP] Not provided

Gearbox TM-485A1

	D_5025_2		Sheet 2/4		
FIG.	**REF.**	**QTY**	**DESCR.**	**FROM**	**UPTO**
2	24870062	2	Selector Valve		
4	24870105	1	REAR Cover Input Shaft		
5	24870208	1	REAR Cover Output Shaft		
9	24813500.67	6	Spacer		
10	24870219	3	Shim		
11	24870222	1	Washer		
12	24810307	2	Washer		
13	24870124	2	Piston		
14	24810322	2	Spring		
15	24870201	1	Output Shaft		
16	24873101	1	Input Shaft		
18	24810316	18	Disk		
19	24870115	20	Conduct Disk		
20	24870113	2	Retainer Ring		
21	24810328	4	Washer		
22	24810325	2	Washer		
26	24870081.1	1	SUCTION Pipe [NP]		
31	24810065	1	Plug		
35	24873203	1	Gear R.2,09		
36	24873210	1	Gear R.2,09		
38	24870203	1	TRANSFER Gear,LAY Shaft		
39	24870224	1	Flange Output		
45	24850087	2	Plug		
51	24810103	1	Oil Grommet		
52	24870214	1	LIP Seal		
56	24870059	2	O-Ring		
58	24870318	2	THRUST RACE		
59	24870118	2	THRUST RACE		
60	24810309	4	Roller		
62	24810063	1	Plane Washer		
66	24820075	3	Washer GROWER DIN 127-10 [NP]		
67	24860092	5	Washer		
70	24810047	6	Bolt DIN 933 M8-25 8.8 [NP]		
73	52101310	3	Bolt DIN 931 M10-35 8.8		
75	24870207	2	Bearing		

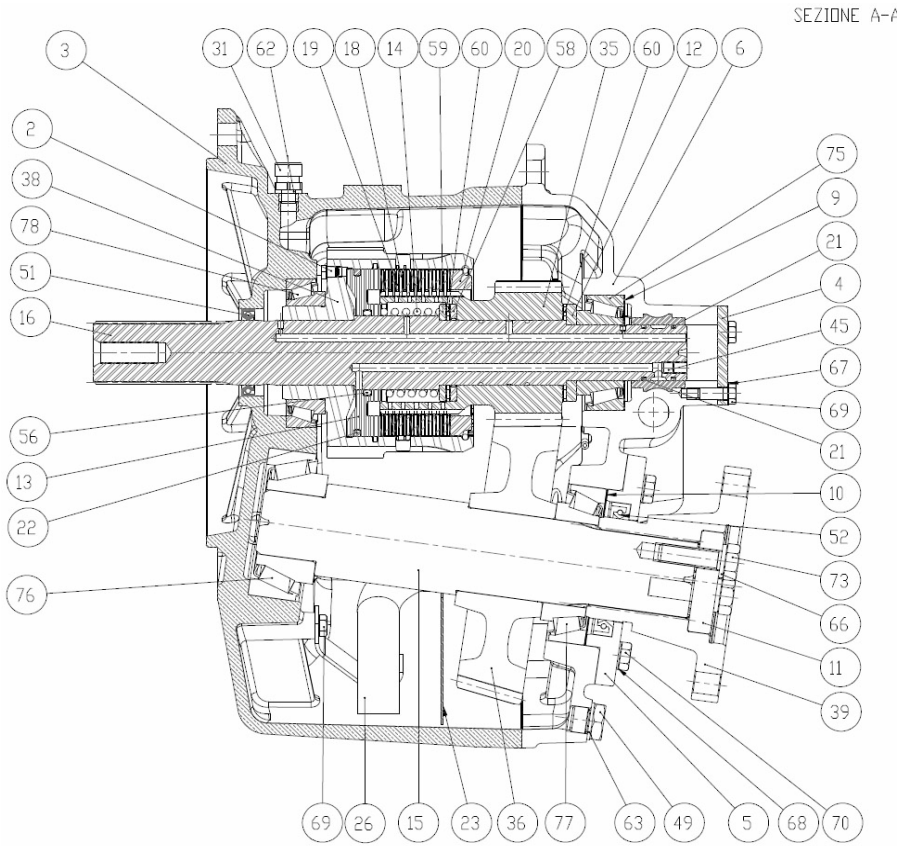

[NP] Not provided

Gearbox TM-485A1

D_5025_2			Sheet 2/4		
FIG.	**REF.**	**QTY**	**DESCR.**	**FROM**	**UPTO**
76	24870212	1	Conical Roller Bearing 30307		
77	24870205	1	Bearing		
78	24870206	2	Bearing		

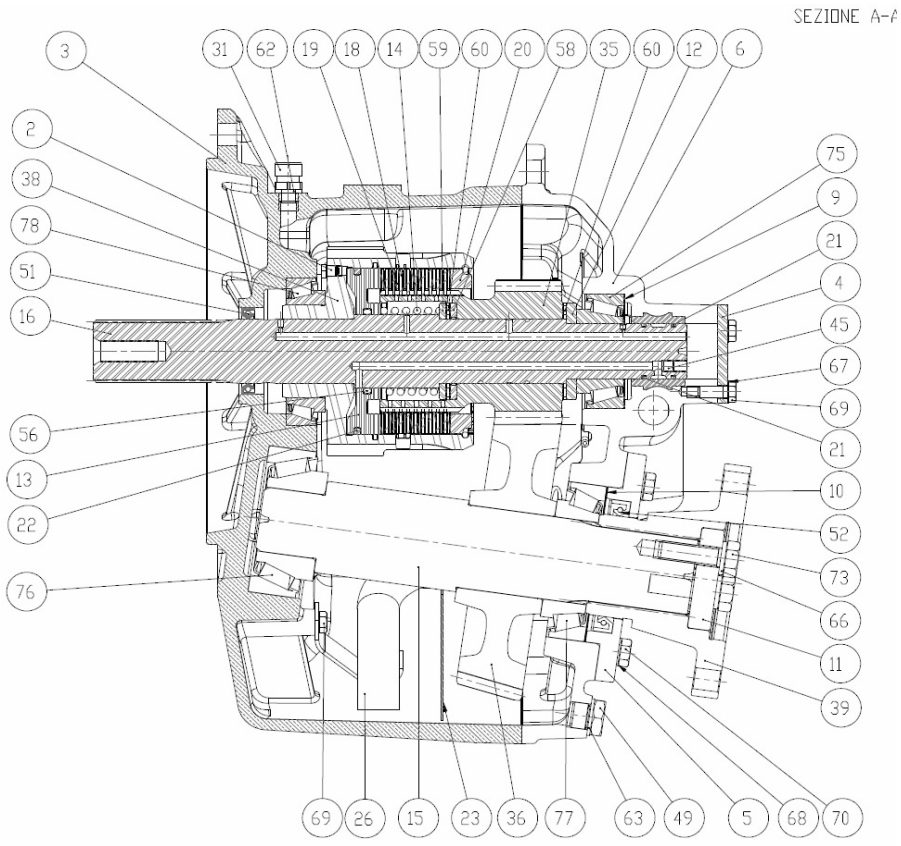

Gearbox TM-485A1

	D_5025_3		Sheet 3/4		
FIG.	REF.	QTY	DESCR.	FROM	UPTO
1	24810062	1	Valve BY PASS [NP]		
17	24870301	1	LAY Shaft		
27	24870082.1	1	Pipe		
28	24870083.1	1	PIPE		
29	24870084.1	1	Bushing		
30	24870310	2	FIXING Ring		
32	24870035.1	1	Oil Filter		
33	24870303	1	Cover		
34	24873302	1	Gear R.2,09		
37	24870103	1	TRANSFER Gear,PRIMARY Shaft		
42	24870086.1	1	Spring [NP]		
44	24870044.1	1	Screw		
48	24870047.1	1	Screw		
55	24870009	1	O-Ring		
57	24870011.1	1	O-Ring		
61	24820086	2	Washer 8-13-1,5 [NP]		
80	24870083	1	PIPE		

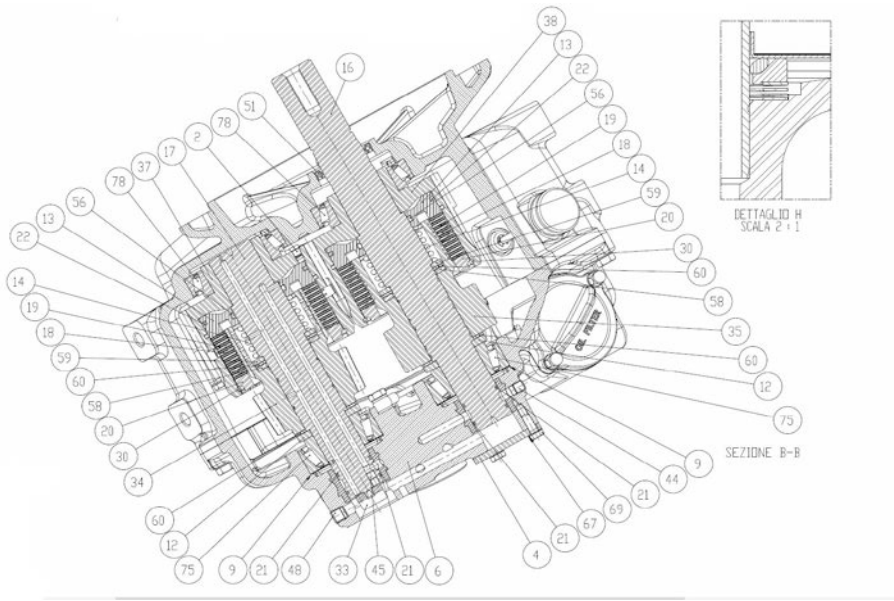

[NP] Not provided

Gearbox TM-485A1

	D_5025_4		Sheet 4/4		
FIG.	**REF.**	**QTY**	**DESCR.**	**FROM**	**UPTO**
8	24870015	1	Gasket		
24	24850005	1	Plate, IDENTIFICATION		
25	24870085	2	Pin		
53	24870009.1	1	O-Ring		
54	24870010.1	2	O-Ring		
72	24870044	2	Screw		
74	24870071	2	Stud		
81	24870012.1	2	Nut		

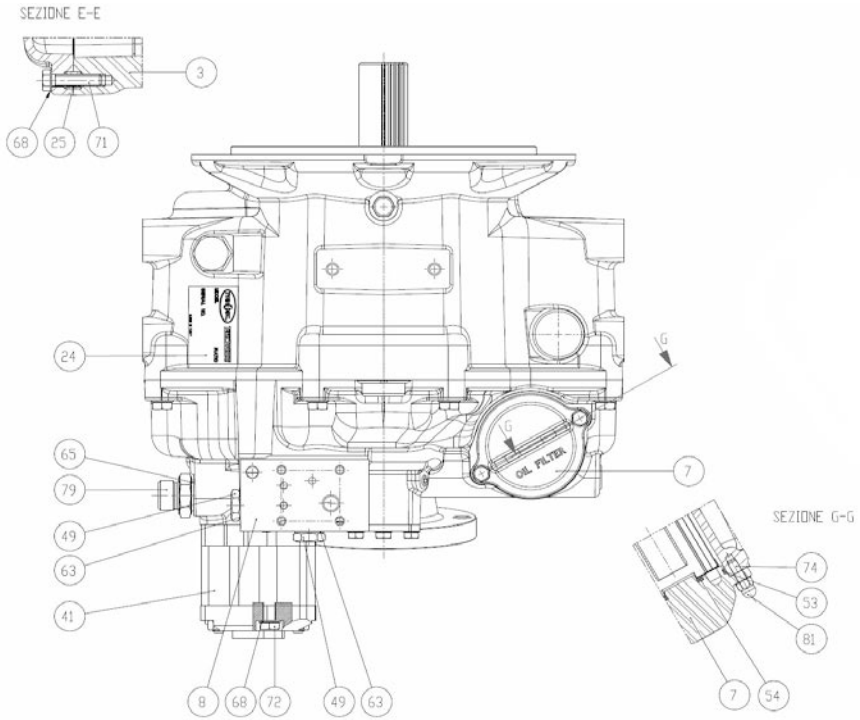

Gearbox TM-485A1

	D_5025_5		Maintenance Kit		
FIG.	**REF.**	**QTY**	**DESCR.**	**FROM**	**UPTO**
1	24873401	1	Gasket Kit		
2	A0105000	1	15W40 Sole Diesel Oil 5L		
3	24873403	2	Clutch Plate Kit		

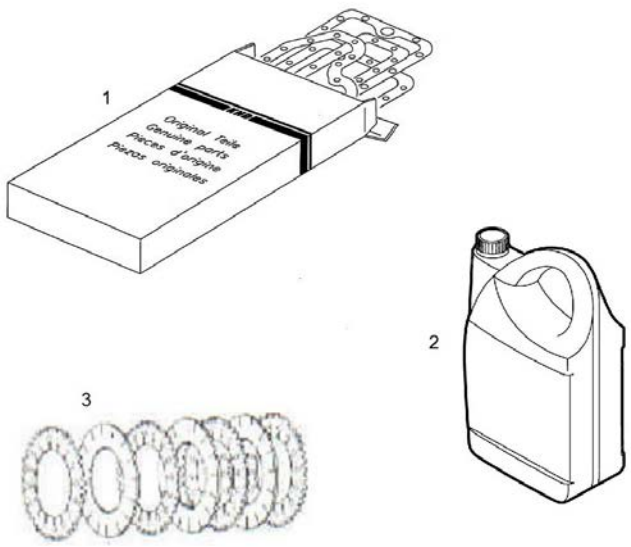

Gearbox TM-880A

D_5026_1.1			Sheet 1.1/4		
FIG.	REF.	QTY	DESCR.	FROM	UPTO
136	24820090	2	Pin		
137	24816080	1	Plate Pipe		
138	24810082	2	Bolt DIN 933 M8-10 8.8 [NP]		
139	24816001	1	Front Body TM 880A		
59	24810047	6	Bolt DIN 933 M8-25 8.8 [NP]		
60	24810014	6	Washer GROWER DIN 127-8 [NP]		
61	24820072	1	Cover Input Shaft		
62	24820103	1	Oil Grommet		
63	24810065	1	Plug		
64	24820005.1	1	NAME Plate		
65	24810071	2	Stud		
66	56000083	1	Washer 21-26-1,5		
67	24810012	1	Nut		
68	24810063	1	Plane Washer		
69	24810068	1	Plug		
70	24810008	1	ROD, Oil LEVEL		
71	24820071	2	Stud		
72	24816002	1	REVERSE Body TM 880A		
73	24810059	1	Plane Washer		
74	24810060	1	Racord		
75	24810062	1	Valve BY PASS [NP]		
76	24820086	1	Washer 8-13-1,5 [NP]		
77	24830105	1	Plug		
78	24820102	1	Cover, REAR		

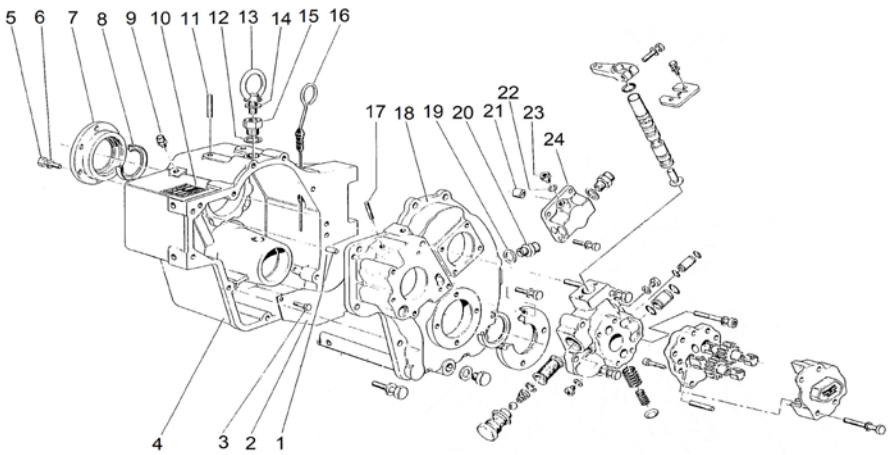

[NP] Not provided

Gearbox TM-880A

D_5026_1.2			Sheet 1.2/4		
FIG.	REF.	QTY	DESCR.	FROM	UPTO
103	24820013	2	Bolt DIN 912 M10-30 8.8 [NP]		
104	24810026.1	3	Cover		
107	52103311	9	Bolt DIN 912 M10-40 8.8		
108	24810013	4	Bolt DIN 931 M8-65 8.8 [NP]		
110	24820015.1	1	Oil Pump Body		
111	24820025.1	3	Bolt DIN 912 M6-25 8.8 [NP]		
112	24810025	4	Bushing		
113	24810096	1	Gear, Conduct		
114	24820023.1	2	Pin		
115	24820026	1	Distributor Cap		
116	24810055	1	Expansion Plug		
118	24816054	1	Spring, Valve		
119	24820098	2	Bolt DIN 912 M10-50 8.8 [NP]		
123	24810035	1	Oil Filter		
124	24810032	1	SNAP Ring		
125	24810030	1	Valve Spring		
126	18024143	1	Ball,steel 1/2"		
127	24810027	1	Washer		
128	24810024	1	Plug, Oil Filter DRAIN		
129	24820208	1	Cover Front		
130	24820214	1	Grommet		
131	24810011	1	Plug,oil drain		
132	24810088	1	Washer 14-20-1,5 [NP]		
133	52101314	1	Bolt DIN 931 M10-55 8.8		
135	24816081	1	Aspiration Tube TM 880A		
136	24820090	2	Pin		

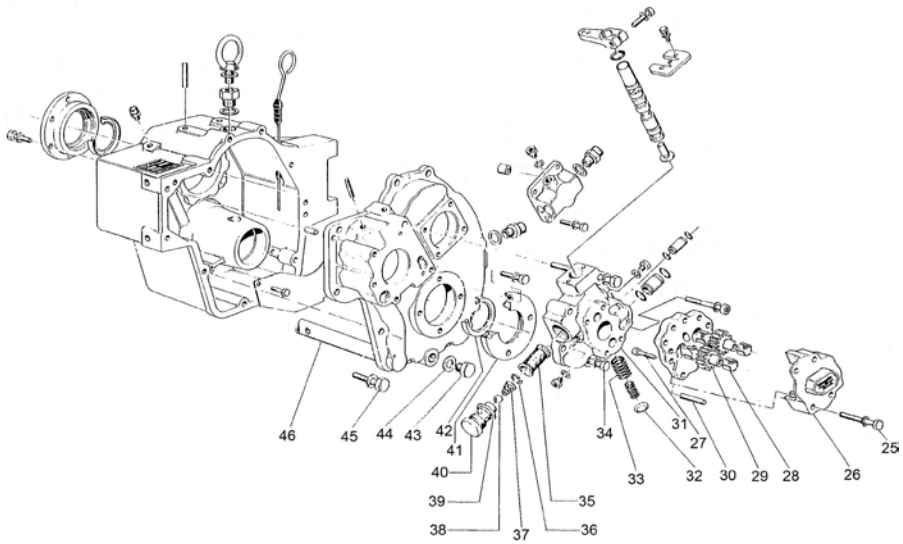

[NP] Not provided

Gearbox TM-880A

D_5026_1.3			Sheet 1.3/4		
FIG.	REF.	QTY	DESCR.	FROM	UPTO
100	24820062	2	Tube, Racord		
101	24820063	2	O-Ring D. 15X1,7		
103	24820013	2	Bolt DIN 912 M10-30 8.8 [NP]		
104	24810026.1	3	Cover		
105	24810095	3	Gear, ConductOR		
62	24820103	1	Oil Grommet		
66	56000083	1	Washer 21-26-1,5		
77	24830105	1	Plug		
78	24820102	1	Cover, REAR		
81	24810056	1	O-Ring D. 15,08X2,62 [NP]		
82	24810424	1	Lever		
85	24810044	2	Bolt DIN 933 M6-16 8.8 [NP]		
86	24810042	2	Washer GROWER DIN 127-6 [NP]		
87	24810041	1	Support		
88	24810051	1	Distributor		
89	24810052	1	Valve		
90	24820075	4	Washer GROWER DIN 127-10 [NP]		
91	24820076	4	Bolt DIN 933 M10-30 8.8 [NP]		
95	24820087	1	Bolt DIN 931 M10-130 8.8 [NP]		
98	24820060	1	Tube, Racord		
99	24820059	2	O-Ring D. 10X1,7		

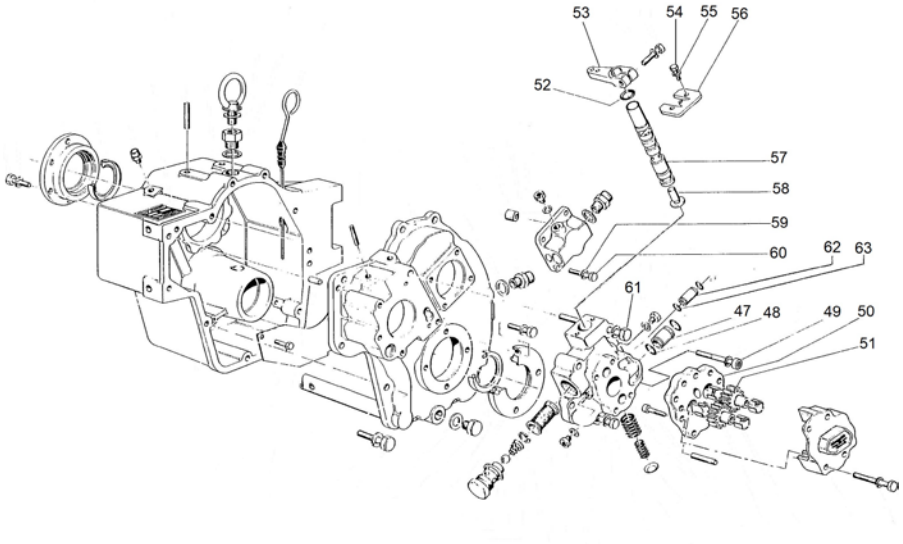

[NP] Not provided

Gearbox TM-880A

	D_5026_2		Input Shaft 2/4		
FIG.	REF.	QTY	DESCR.	FROM	UPTO
1	24820134	1	Conical Roller Bearing 32011-JR		
2	24810326	1	Plug		
3	24820130	1	Bell		
4	24820125	1	Washer		
5	24820124	1	Piston		
6	24820115	9	Disk		
7	24820116	8	Disk		
8	24810211	1	KEY		
9	24820126	1	Washer		
10	24820101	1	Input Shaft		
11	24810328	2	Washer		
117	24810333	0	Spacer [VAR]		
12	24810326	1	Plug		
13	24820122	1	Spring		
14	24820123	1	Bearing		
15	24820113	1	Grommet		
16	24820129	1	Ring		
17	24820128	1	SNAP Ring		
18A	24822302	1	Gear R. 1,50 TM 170		
18B	24823302	1	Gear R. 2,04 TM 170		
18C	24824302	1	Gear R. 2.50 TM 170		
19	24820117	1	Bushing		
20	24820118	1	Ring		
21	24820121	1	Roller Bearing AXK-4060		
22	24820105	1	Washer		
23	24820104	1	Conical Roller Bearing 32307		

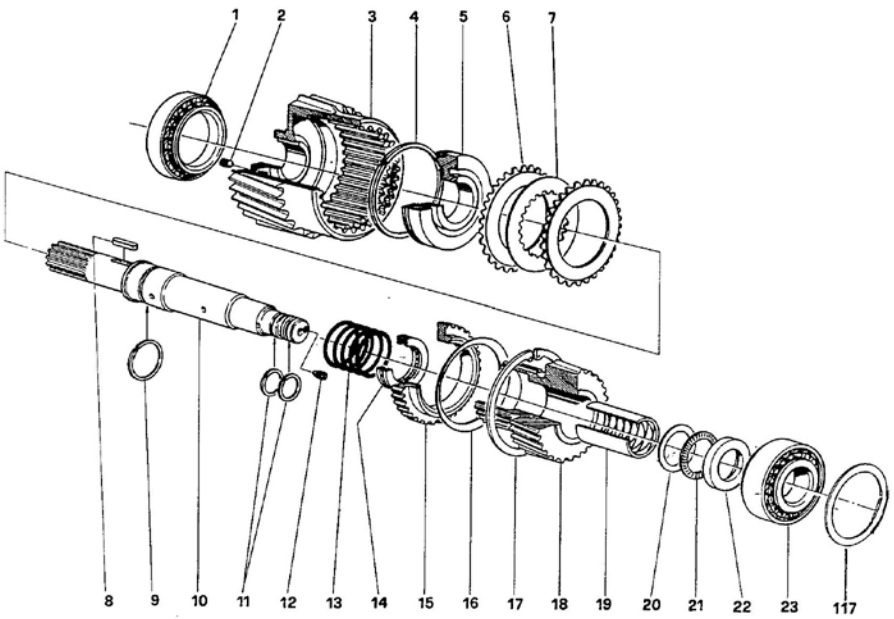

[VAR] Variable according to repair

Gearbox TM-880A

D_5026_3			Intermediate Shaft 3/4		
FIG.	REF.	QTY	DESCR.	FROM	UPTO
117	24810333	0	Spacer [VAR]		
24	24820134	1	Conical Roller Bearing 32011-JR		
25	24810326	1	Plug		
26	24820330	1	Bell		
27	24820125	1	Washer		
28	24820124	1	Piston		
29	24820115	9	Disk		
30	24820116	8	Disk		
31	24810211	1	KEY		
32	24820126	1	Washer		
33	24820301	1	INTERMEDIATE Shaft		
34	24820126	1	Washer		
35	24810326	1	Plug		
36	24820122	1	Spring		
37	24820123	1	Bearing		
38	24820113	1	Grommet		
39	24820129	1	Ring		
40	24820128	1	SNAP Ring		
41A	24822302A	1	Gear R. 1,53 TM 170A		
41B	24823302A	1	Gear R. 2,08 TM 170A		
41C	24824302A	1	Gear R. 2,60 TM 170A		
42	24820117	1	Bushing		
43	24820118	1	Ring		
44	24820121	1	Roller Bearing AXK-4060		
45	24820105	1	Washer		
46	24820104	1	Conical Roller Bearing 32307		

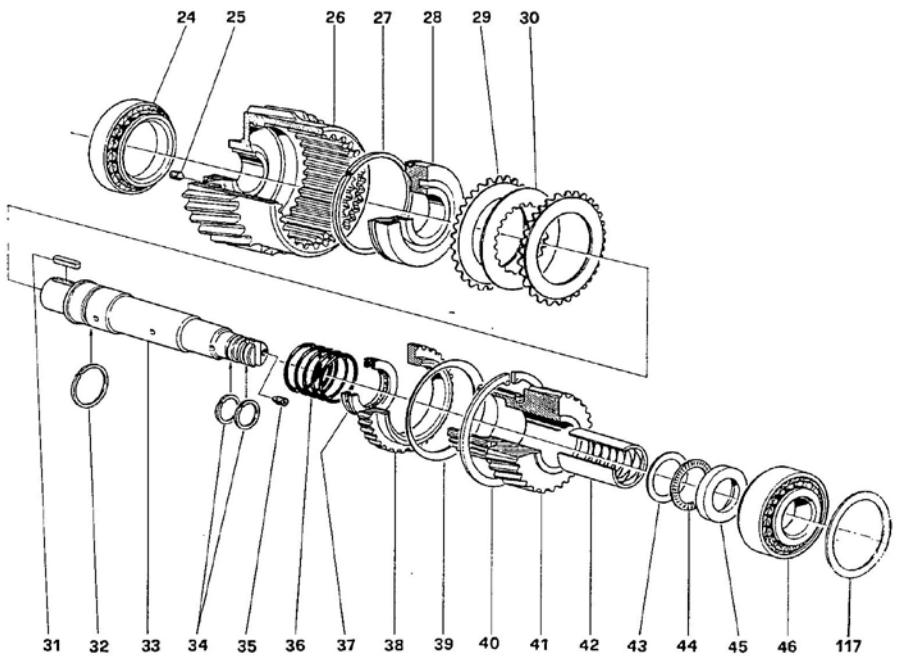

[VAR] Variable according to repair

Gearbox TM-880A

	D_5026_4		Output Shaft 4/4		
FIG.	REF.	QTY	DESCR.	FROM	UPTO
140	24820333.1	0	Shim [VAR]		
47	24820206	1	Conical Roller Bearing 33210		
48/51	24824201AC	1	Gear+Output Shaft Kit+Spacer		
48/51	24822201AC	1	Gear+Output Shaft Kit+Spacer		
48/51	24823201AC	1	Gear+Output Shaft Kit+Spacer		
52	24820212	1	Conical Roller Bearing 30210-J2/Q		
53	24820224	1	Flange, Output		
54	24820225	1	O-Ring D. 45X3,5		
55	24820219	1	BUTT Washer		
56	24820220	1	Pin		
57	24820221	1	1 [NP]		
58	24820222.1	1	Screw		

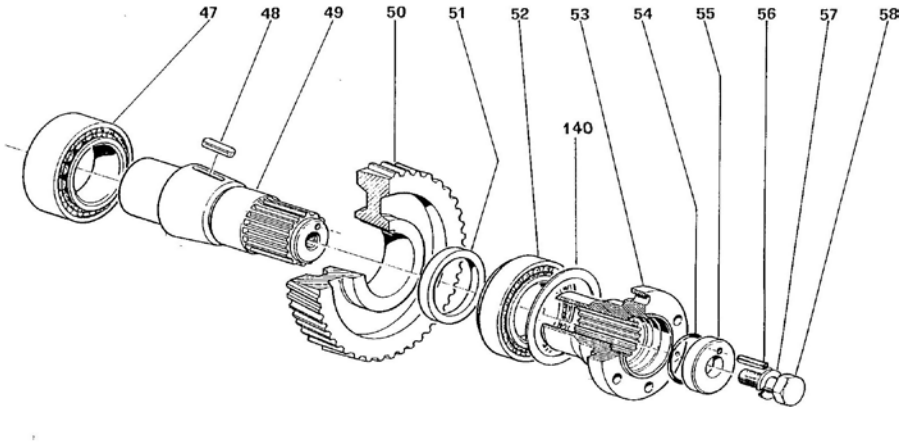

[NP] Not provided

[VAR] Variable according to repair

Gearbox TM-880A

	D_5027_5		Maintenance Kit		
FIG.	**REF.**	**QTY**	**DESCR.**	**FROM**	**UPTO**
1	24820401	1	Kit Gasket		
2	A0105000	1	15W40 Sole Diesel Oil 5L		
3	24820403	2	Clutch Plate Kit		

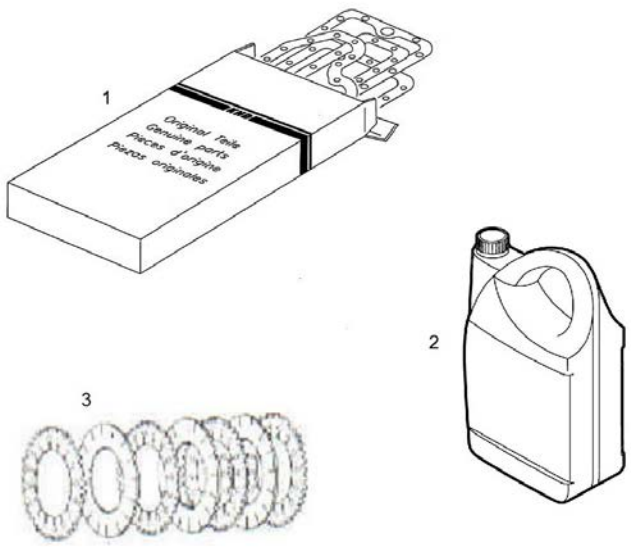

Gearbox TM-170

D_5027_1.1			Sheet 1.1/4		
FIG.	REF.	QTY	DESCR.	FROM	UPTO
136	24820090	2	Pin		
137	24816080	1	Plate Pipe		
138	24810082	2	Bolt DIN 933 M8-10 8.8 [NP]		
139	24820001	1	Front Body TM 170		
59	24810047	6	Bolt DIN 933 M8-25 8.8 [NP]		
60	24810014	6	Washer GROWER DIN 127-8 [NP]		
61	24820072	1	Cover Input Shaft		
62	24820103	1	Oil Grommet		
63	24810065	1	Plug		
64	24820005.1	1	NAME Plate		
65	24810071	2	Stud		
66	56000083	1	Washer 21-26-1,5		
67	24810012	1	Nut		
68	24810063	1	Plane Washer		
69	24810068	1	Plug		
70	24810008	1	ROD, Oil LEVEL		
71	24820071	2	Stud		
72	24820002	1	Reverse Body TM 170		
73	24810059	1	Plane Washer		
74	24810060	1	Racord		
75	24810062	1	Valve BY PASS [NP]		
76	24820086	1	Washer 8-13-1,5 [NP]		
77	24830105	1	Plug		
78	24820102	1	Cover, REAR		

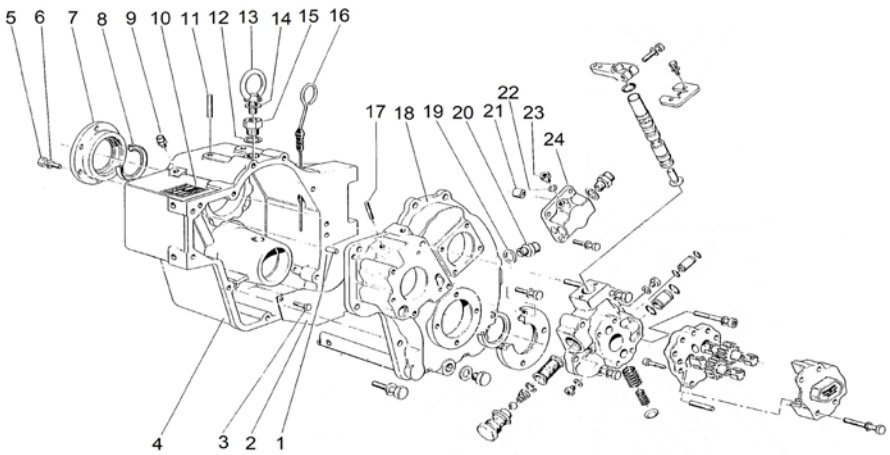

[NP] Not provided

Gearbox TM-170

D_5026_1.2			Sheet 1.2/4		
FIG.	REF.	QTY	DESCR.	FROM	UPTO
103	24820013	2	Bolt DIN 912 M10-30 8.8 [NP]		
104	24810026.1	3	Cover		
107	52103311	9	Bolt DIN 912 M10-40 8.8		
108	24810013	4	Bolt DIN 931 M8-65 8.8 [NP]		
110	24820015.1	1	Oil Pump Body		
111	24820025.1	3	Bolt DIN 912 M6-25 8.8 [NP]		
112	24810025	4	Bushing		
113	24810096	1	Gear, Conduct		
114	24820023.1	2	Pin		
115	24820026	1	Distributor Cap		
116	24810055	1	Expansion Plug		
118	24816054	1	Spring, Valve		
119	24820098	2	Bolt DIN 912 M10-50 8.8 [NP]		
123	24810035	1	Oil Filter		
124	24810032	1	SNAP Ring		
125	24810030	1	Valve Spring		
126	18024143	1	Ball,steel 1/2"		
127	24810027	1	Washer		
128	24810024	1	Plug, Oil Filter DRAIN		
129	24820208	1	Cover Front		
130	24820214	1	Grommet		
131	24810011	1	Plug,oil drain		
132	24810088	1	Washer 14-20-1,5 [NP]		
133	52101314	1	Bolt DIN 931 M10-55 8.8		
135	24816081	1	Aspiration Tube TM 880A		
136	24820090	2	Pin		

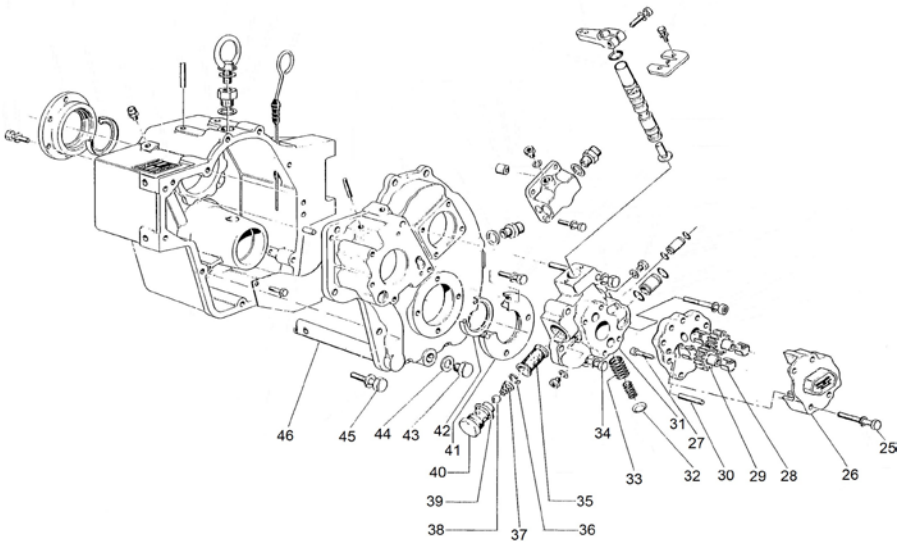

[NP] Not provided

Gearbox TM-170

D_5026_1.3			Sheet 1.3/4		
FIG.	REF.	QTY	DESCR.	FROM	UPTO
100	24820062	2	Tube, Racord		
101	24820063	2	O-Ring D. 15X1,7		
103	24820013	2	Bolt DIN 912 M10-30 8.8 [NP]		
104	24810026.1	3	Cover		
105	24810095	3	Gear, ConductOR		
62	24820103	1	Oil Grommet		
66	56000083	1	Washer 21-26-1,5		
77	24830105	1	Plug		
78	24820102	1	Cover, REAR		
81	24810056	1	O-Ring D. 15,08X2,62 [NP]		
82	24810424	1	Lever		
85	24810044	2	Bolt DIN 933 M6-16 8.8 [NP]		
86	24810042	2	Washer GROWER DIN 127-6 [NP]		
87	24810041	1	Support		
88	24810051	1	Distributor		
89	24810052	1	Valve		
90	24820075	4	Washer GROWER DIN 127-10 [NP]		
91	24820076	4	Bolt DIN 933 M10-30 8.8 [NP]		
95	24820087	1	Bolt DIN 931 M10-130 8.8 [NP]		
98	24820060	1	Tube, Racord		
99	24820059	2	O-Ring D. 10X1,7		

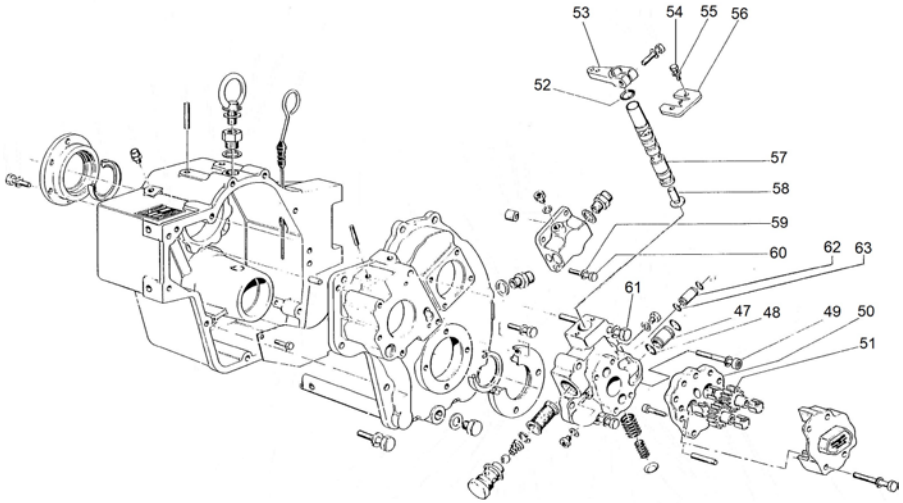

[NP] Not provided

Gearbox TM-170

	D_5027_2		Input Shaft 2/4		
FIG.	REF.	QTY	DESCR.	FROM	UPTO
1	24820134	1	Conical Roller Bearing 32011-JR		
2	24810334	1	Plug		
3	24820130	1	Bell		
4	24820125	1	Washer		
5	24820124	1	Piston		
6	24820115	9	Disk		
7	24820116	8	Disk		
8	24810211	1	KEY		
9	24820126	1	Washer		
10	24820101	1	Input Shaft		
11	24810328	2	Washer		
12	24810326	1	Plug		
13	24820122	1	Spring		
14	24820123	1	Bearing		
141	24810333	0	Spacer [VAR]		
15	24820113	1	Grommet		
16	24820129	1	Ring		
17	24820128	1	SNAP Ring		
18A	24822302	1	Gear R. 1,50 TM 170		
18B	24823302	1	Gear R. 2,04 TM 170		
18C	24824302	1	Gear R. 2.50 TM 170		
18D	24825302	1	Gear Red. 2,94 TM 170		
19	24820117	1	Bushing		
20	24820118	1	Ring		
21	24820121	1	Roller Bearing AXK-4060		
22	24820105	1	Washer		
23	24820104	1	Conical Roller Bearing 32307		

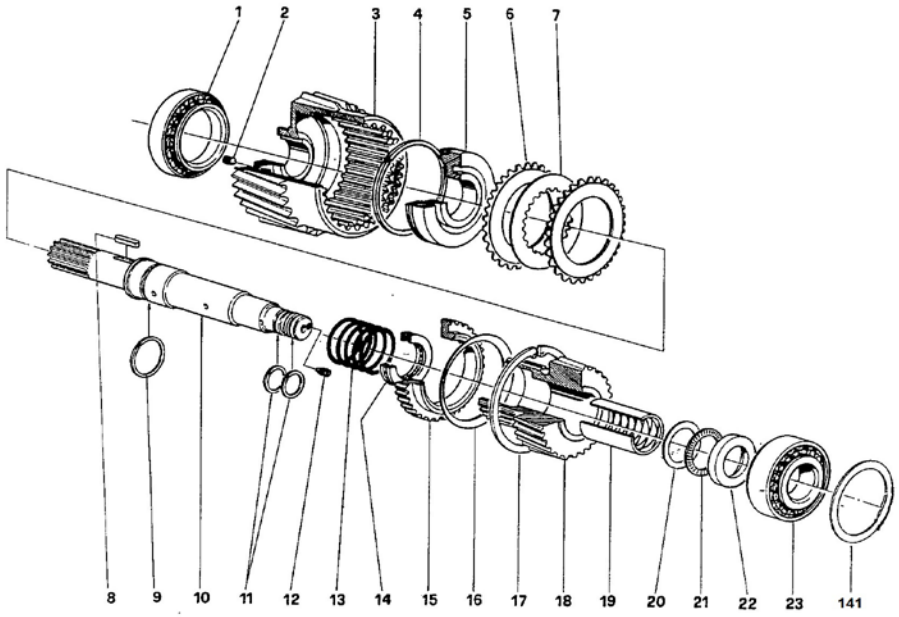

[VAR] Variable according to repair

Gearbox TM-170

D_5027_3			Intermediate Shaft 3/4		
FIG.	REF.	QTY	DESCR.	FROM	UPTO
141	24810333	0	Spacer [VAR]		
24	24820134	1	Conical Roller Bearing 32011-JR		
25	24810334	1	Plug		
26	24820330	1	Bell		
27	24820125	1	Washer		
28	24820124	1	Piston		
29	24820115	9	Disk		
30	24820116	8	Disk		
31	24810211	1	KEY		
32	24820126	1	Washer		
33	24820301	1	INTERMEDIATE Shaft		
34	24810328	2	Washer		
35	24810326	1	Plug		
36	24820122	1	Spring		
37	24820123	1	Bearing		
38	24820113	1	Grommet		
39	24820129	1	Ring		
40	24820128	1	SNAP Ring		
41A	24822302	1	Gear R. 1,50 TM 170		
41B	24823302	1	Gear R. 2,04 TM 170		
41C	24824302	1	Gear R. 2.50 TM 170		
41D	24825302	1	Gear Red. 2,94 TM 170		
42	24820117	1	Bushing		
43	24820118	1	Ring		
44	24820121	1	Roller Bearing AXK-4060		
45	24820105	1	Washer		
46	24820104	1	Conical Roller Bearing 32307		

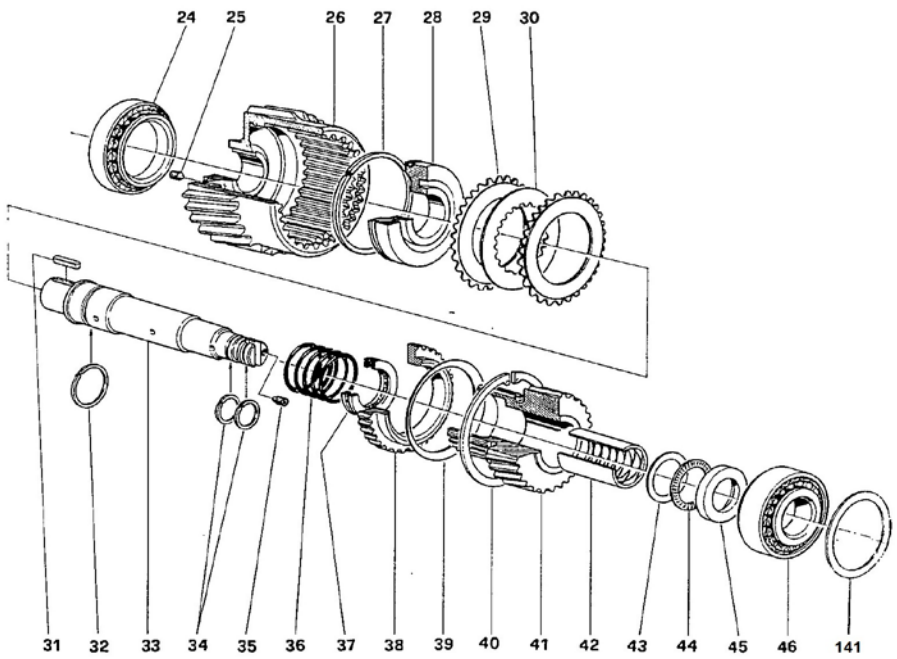

[VAR] Variable according to repair

Gearbox TM-170

	D_5027_4		Output Shaft 4/4		
FIG.	REF.	QTY	DESCR.	FROM	UPTO
140	24820333.1	0	Shim [VAR]		
47	24820206	1	Conical Roller Bearing 33210		
49/50	24824201C	1	Gear+Output Shaft Kit+Spacer		
49/50	24823201C	1	Gear+Output Shaft Kit+Spacer		
49/50	24825201C	1	Gear+Output Shaft Kit+Spacer		
49/50	24822201C	1	Gear+Output Shaft Kit+Spacer		
51	24820209	1	Spacer, Output Shaft		
52	24820212	1	Conical Roller Bearing 30210-J2/Q		
53	24820224	1	Flange, Output		
54	24820225	1	O-Ring D. 45X3,5		
55	24820219	1	BUTT Washer		
56	24820220	1	Pin		
57	24820221	1	1 [NP]		
58	24820222.1	1	Screw		

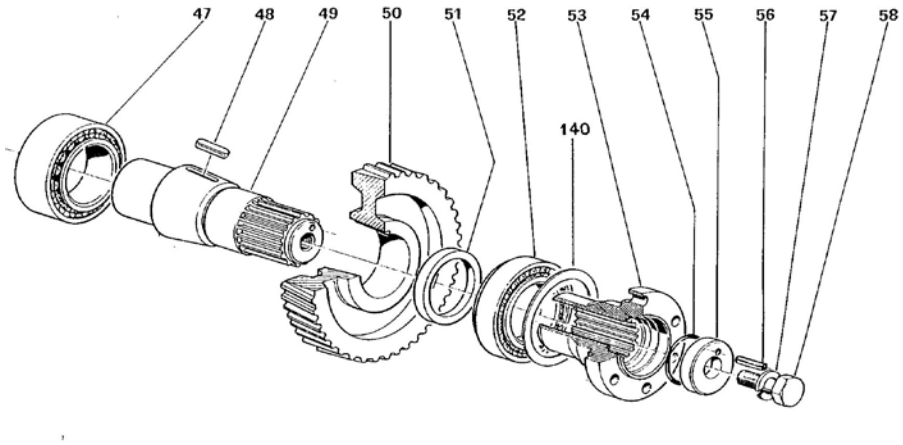

[NP] Not provided

[VAR] Variable according to repair

Gearbox TM-170

	D_5027_5		Maintenance Kit		
FIG.	**REF.**	**QTY**	**DESCR.**	**FROM**	**UPTO**
1	24820401	1	Kit Gasket		
2	A0105000	1	15W40 Sole Diesel Oil 5L		
3	24820403	2	Clutch Plate Kit		

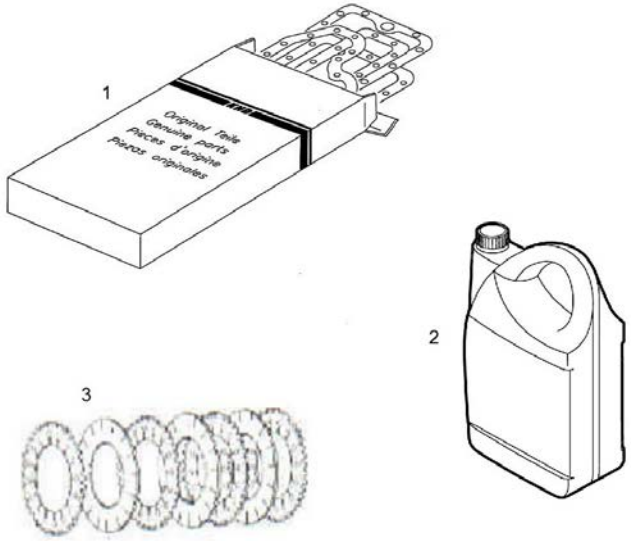

Gearbox TM-170A

D_5027_1.1			Sheet 1.1/4		
FIG.	REF.	QTY	DESCR.	FROM	UPTO
136	24820090	2	Pin		
137	24816080	1	Plate Pipe		
138	24810082	2	Bolt DIN 933 M8-10 8.8 [NP]		
139	24820001	1	Front Body TM 170		
59	24810047	6	Bolt DIN 933 M8-25 8.8 [NP]		
60	24810014	6	Washer GROWER DIN 127-8 [NP]		
61	24820072	1	Cover Input Shaft		
62	24820103	1	Oil Grommet		
63	24810065	1	Plug		
64	24820005.1	1	NAME Plate		
65	24810071	2	Stud		
66	56000083	1	Washer 21-26-1,5		
67	24810012	1	Nut		
68	24810063	1	Plane Washer		
69	24810068	1	Plug		
70	24810008	1	ROD, Oil LEVEL		
71	24820071	2	Stud		
72	24820002	1	Reverse Body TM 170		
73	24810059	1	Plane Washer		
74	24810060	1	Racord		
75	24810062	1	Valve BY PASS [NP]		
76	24820086	1	Washer 8-13-1,5 [NP]		
77	24830105	1	Plug		
78	24820102	1	Cover, REAR		

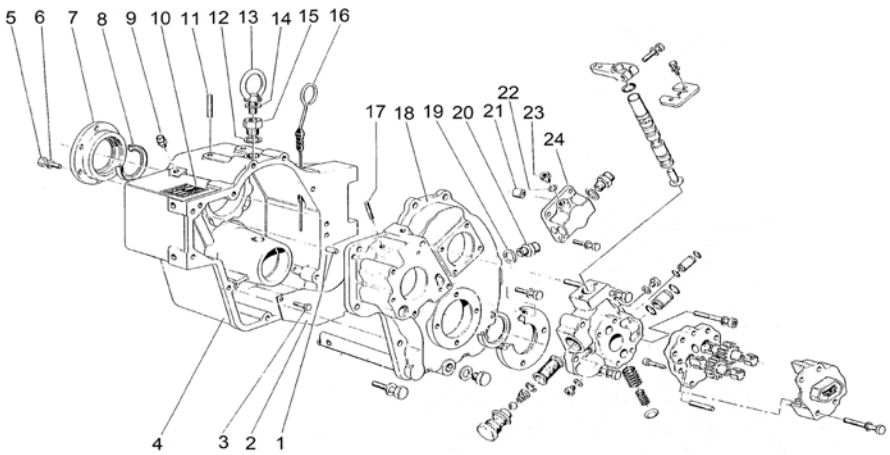

[NP] Not provided

Gearbox TM-170A

D_5026_1.2			Sheet 1.2/4		
FIG.	REF.	QTY	DESCR.	FROM	UPTO
103	24820013	2	Bolt DIN 912 M10-30 8.8 [NP]		
104	24810026.1	3	Cover		
107	52103311	9	Bolt DIN 912 M10-40 8.8		
108	24810013	4	Bolt DIN 931 M8-65 8.8 [NP]		
110	24820015.1	1	Oil Pump Body		
111	24820025.1	3	Bolt DIN 912 M6-25 8.8 [NP]		
112	24810025	4	Bushing		
113	24810096	1	Gear, Conduct		
114	24820023.1	2	Pin		
115	24820026	1	Distributor Cap		
116	24810055	1	Expansion Plug		
118	24816054	1	Spring, Valve		
119	24820098	2	Bolt DIN 912 M10-50 8.8 [NP]		
123	24810035	1	Oil Filter		
124	24810032	1	SNAP Ring		
125	24810030	1	Valve Spring		
126	18024143	1	Ball,steel 1/2"		
127	24810027	1	Washer		
128	24810024	1	Plug, Oil Filter DRAIN		
129	24820208	1	Cover Front		
130	24820214	1	Grommet		
131	24810011	1	Plug,oil drain		
132	24810088	1	Washer 14-20-1,5 [NP]		
133	52101314	1	Bolt DIN 931 M10-55 8.8		
135	24816081	1	Aspiration Tube TM 880A		
136	24820090	2	Pin		

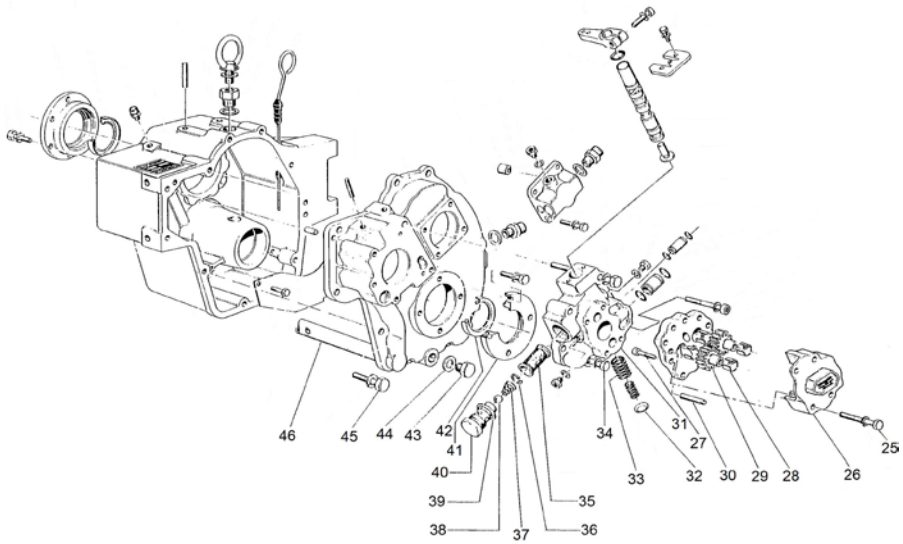

[NP] Not provided

Gearbox TM-170A

D_5026_1.3			Sheet 1.3/4		
FIG.	REF.	QTY	DESCR.	FROM	UPTO
100	24820062	2	Tube, Racord		
101	24820063	2	O-Ring D. 15X1,7		
103	24820013	2	Bolt DIN 912 M10-30 8.8 [NP]		
104	24810026.1	3	Cover		
105	24810095	3	Gear, ConductOR		
62	24820103	1	Oil Grommet		
66	56000083	1	Washer 21-26-1,5		
77	24830105	1	Plug		
78	24820102	1	Cover, REAR		
81	24810056	1	O-Ring D. 15,08X2,62 [NP]		
82	24810424	1	Lever		
85	24810044	2	Bolt DIN 933 M6-16 8.8 [NP]		
86	24810042	2	Washer GROWER DIN 127-6 [NP]		
87	24810041	1	Support		
88	24810051	1	Distributor		
89	24810052	1	Valve		
90	24820075	4	Washer GROWER DIN 127-10 [NP]		
91	24820076	4	Bolt DIN 933 M10-30 8.8 [NP]		
95	24820087	1	Bolt DIN 931 M10-130 8.8 [NP]		
98	24820060	1	Tube, Racord		
99	24820059	2	O-Ring D. 10X1,7		

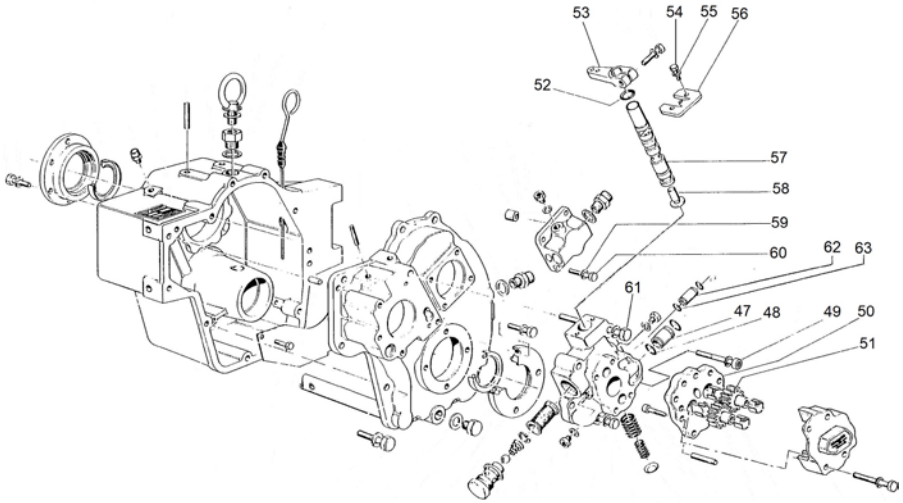

[NP] Not provided

Gearbox TM-170A

	D_5028_2		Input Shaft 2/4		
FIG.	REF.	QTY	DESCR.	FROM	UPTO
1	24820134	1	Conical Roller Bearing 32011-JR		
2	24810334	1	Plug		
3	24820130	1	Bell		
4	24820125	1	Washer		
5	24820124	1	Piston		
6	24820115	9	Disk		
7	24820116	8	Disk		
8	24810211	1	KEY		
9	24820126	1	Washer		
10	24820101	1	Input Shaft		
11	24810328	2	Washer		
12	24810326	1	Plug		
13	24820122	1	Spring		
14	24820123	1	Bearing		
141	24810333	0	Spacer [VAR]		
15	24820113	1	Grommet		
16	24820129	1	Ring		
17	24820128	1	SNAP Ring		
18A	24822302	1	Gear R. 1,50 TM 170		
18B	24823302	1	Gear R. 2,04 TM 170		
18C	24824302	1	Gear R. 2.50 TM 170		
19	24820117	1	Bushing		
20	24820118	1	Ring		
21	24820121	1	Roller Bearing AXK-4060		
22	24820105	1	Washer		
23	24820104	1	Conical Roller Bearing 32307		

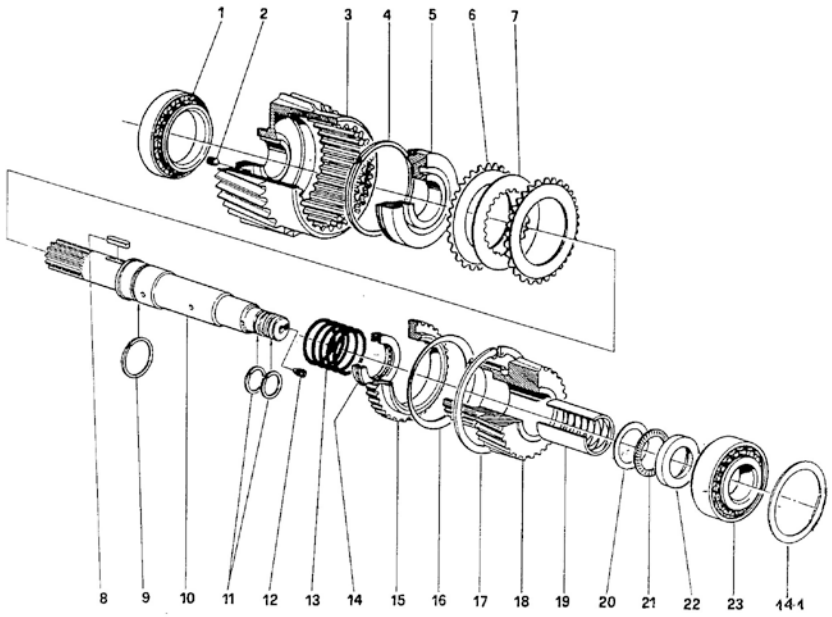

[VAR] Variable according to repair

Gearbox TM-170A

D_5028_3			Intermediate Shaft 3/4		
FIG.	REF.	QTY	DESCR.	FROM	UPTO
141	24810333	0	Spacer [VAR]		
24	24820134	1	Conical Roller Bearing 32011-JR		
25	24810334	1	Plug		
26	24820330	1	Bell		
27	24820125	1	Washer		
28	24820124	1	Piston		
29	24820115	9	Disk		
30	24820116	8	Disk		
31	24810211	1	KEY		
32	24820126	1	Washer		
33	24820301	1	INTERMEDIATE Shaft		
34	24810328	2	Washer		
35	24810326	1	Plug		
36	24820122	1	Spring		
37	24820123	1	Bearing		
38	24820113	1	Grommet		
39	24820129	1	Ring		
40	24820128	1	SNAP Ring		
41A	24822302A	1	Gear R. 1,53 TM 170A		
41B	24823302A	1	Gear R. 2,08 TM 170A		
41C	24824302A	1	Gear R. 2,60 TM 170A		
42	24820117	1	Bushing		
43	24820118	1	Ring		
44	24820121	1	Roller Bearing AXK-4060		
45	24820105	1	Washer		
46	24820104	1	Conical Roller Bearing 32307		

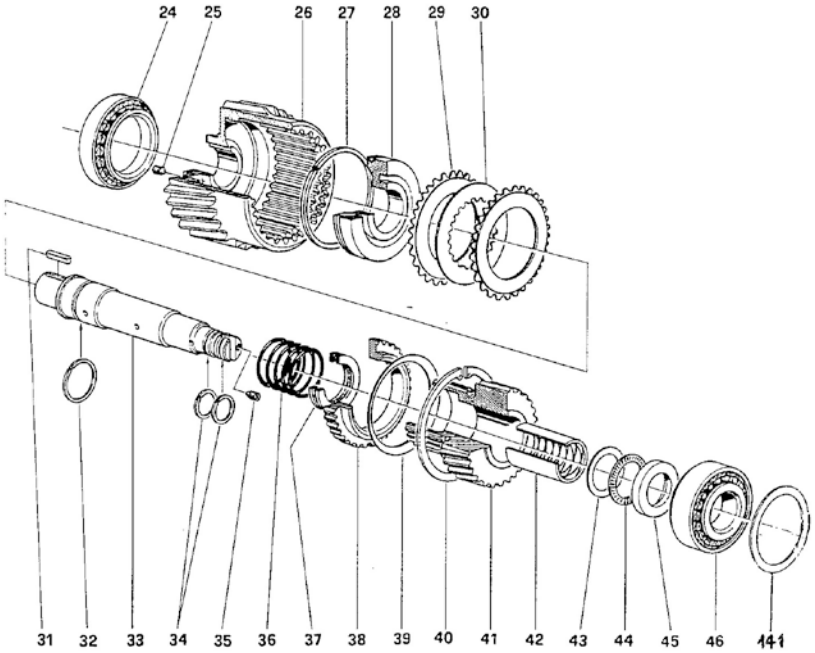

[VAR] Variable according to repair

Gearbox TM-170A

	D_5028_4		Output Shaft 4/4		
FIG.	REF.	QTY	DESCR.	FROM	UPTO
140	24820333.1	0	Shim [VAR]		
47	24820206	1	Conical Roller Bearing 33210		
49/50	24824201AC	1	Gear+Output Shaft Kit+Spacer		
49/50	24822201AC	1	Gear+Output Shaft Kit+Spacer		
49/50	24823201AC	1	Gear+Output Shaft Kit+Spacer		
51	24820209	1	Spacer, Output Shaft		
52	24820212	1	Conical Roller Bearing 30210-J2/Q		
53	24820224	1	Flange, Output		
54	24820225	1	O-Ring D. 45X3,5		
55	24820219	1	BUTT Washer		
56	24820220	1	Pin		
57	24820221	1	1 [NP]		
58	24820222.1	1	Screw		

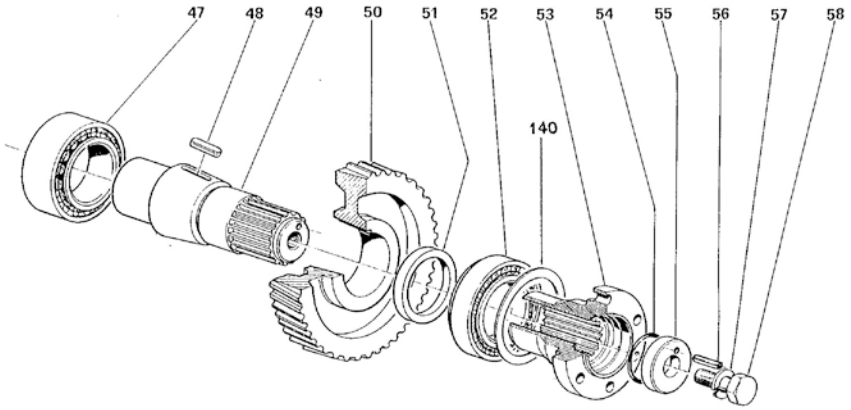

[NP] Not provided

[VAR] Variable according to repair

Gearbox TM-170A

	D_5027_5		Maintenance Kit		
FIG.	**REF.**	**QTY**	**DESCR.**	**FROM**	**UPTO**
1	24820401	1	Kit Gasket		
2	A0105000	1	15W40 Sole Diesel Oil 5L		
3	24820403	2	Clutch Plate Kit		

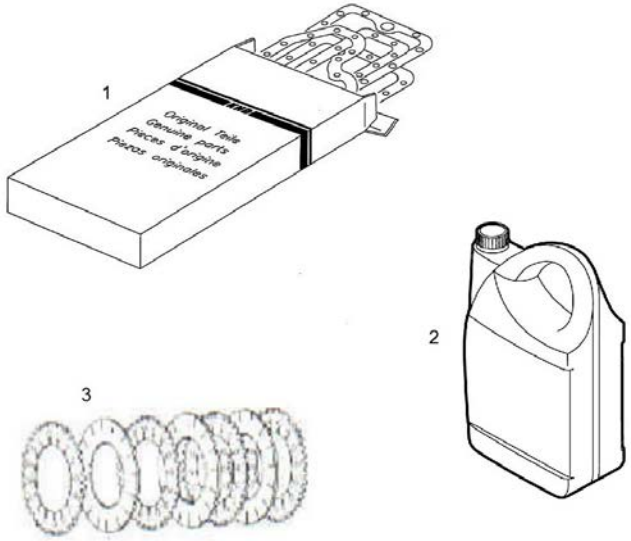

Gearbox TM-93

D_5030_1.1			Sheet 1.1/4		
FIG.	REF.	QTY	DESCR.	FROM	UPTO
100	24810103S	1	Grommet, Oil SILICON		
106	24830008	1	ROD, LEVEL Oil		
107	24810001	1	Front Body TM 93		
108	24810080	1	Plate Pipe [NP]		
109	24810081	1	ASPIRATION Tube [NP]		
110	24810082	2	Bolt DIN 933 M8-10 8.8 [NP]		
113	24810085	2	Pin		
114	24810002	1	Reverse Body TM 93		
117	24810088	1	Washer 14-20-1,5 [NP]		
118	24810011	1	Plug,oil drain		
119	24810089	1	Screw		
120	24810090	1	Cover		
125	24810214	1	Oil Grommet		
126	24810224	1	Flange, Output		
127	24810219	1	BUTT Washer		
128	24840220	1	Pin		
129	24810221	1	Washer GROWER DIN 127-14 [NP]		
130	24810222	1	Bolt DIN 933 M14X40 12.9		
131	24810095	1	Gear, ConductOR		
132	24810096	1	Gear, Conduct		
134	24810098	3	Screw		
NS	24810043	1	Pump Assy Oil [NS]		

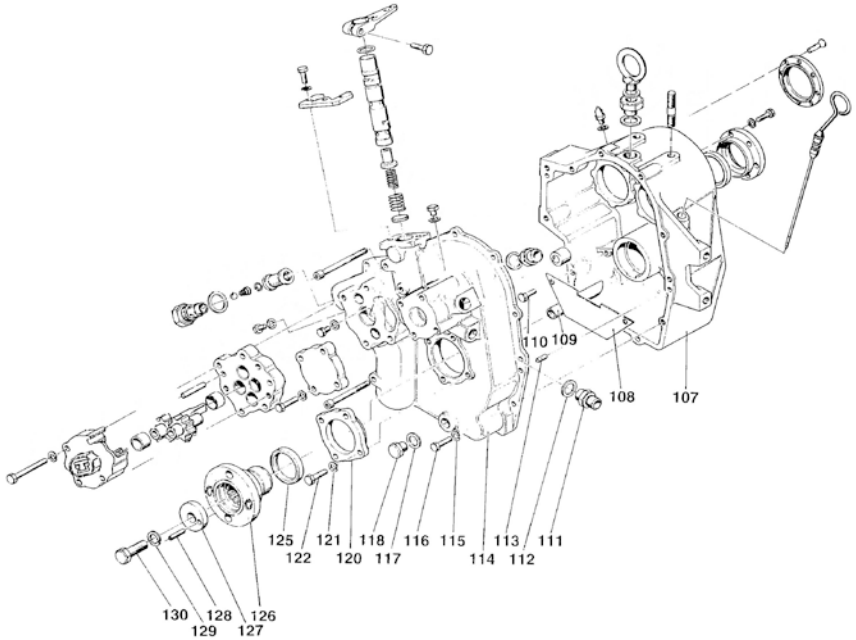

[NP] Not provided
[NS] Not shown

Gearbox TM-93

D_5030_1.2			Sheet 1.2/4		
FIG.	REF.	QTY	DESCR.	FROM	UPTO
119	24810089	1	Screw		
123	53033008	4	Washer GROWER DIN 127-8		
124	52102258	4	Bolt DIN 933 M8-25 8.8		
131	24810095	1	Gear, ConductOR		
132	24810096	1	Gear, Conduct		
58	24810013	4	Bolt DIN 931 M8-65 8.8 [NP]		
59	24810014	4	Washer GROWER DIN 127-8 [NP]		
61	24810025	2	Bushing		
63	24820023.1	2	Pin		
64	24810024	1	Plug, Oil Filter DRAIN		
67	24810027	1	Washer		
68	24810028	1	Screw		
69	18024143	1	Ball,steel 1/2"		
70	24810030	1	Valve Spring		
71	24810032	1	SNAP Ring		
72	24810035	1	Oil Filter		
73	24810036	2	Washer		
74	24810038	1	Cover		
76	24810040	1	Screw		

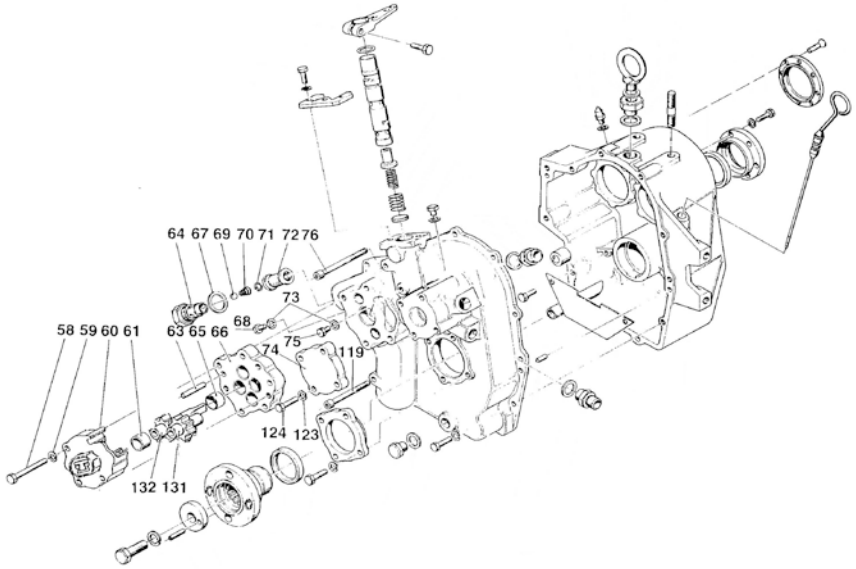

[NP] Not provided

Gearbox TM-93

D_5030_1.3			Sheet 1.3/4		
FIG.	REF.	QTY	DESCR.	FROM	UPTO
100	24810103S	1	Grommet, Oil SILICON		
101	24810072	1	Cover		
102	53033008	6	Washer GROWER DIN 127-8		
103	52102258	6	Bolt DIN 933 M8-25 8.8		
104	24810075	1	Cover		
105	24810076	8	Screw		
106	24830008	1	ROD, LEVEL Oil		
77	24810041	1	Support		
78	24810042	2	Washer GROWER DIN 127-6 [NP]		
79	24810044	2	Bolt DIN 933 M6-16 8.8 [NP]		
80	24810056	1	O-Ring D. 15,08X2,62 [NP]		
81	24810424	1	Lever		
82	24810047	1	Bolt DIN 933 M8-25 8.8 [NP]		
83	24810051	1	Distributor		
84	24810052	1	Valve		
85	24810053	1	Spring, Valve INNER		
86	24810054	1	Spring, Valve		
87	24810055	1	Expansion Plug		
88	24810028	1	Screw		
89	24810036	1	Washer		
90	24810059	1	Plane Washer		
91	24810060	1	Racord		
92	24810062	1	Valve BY PASS [NP]		
93	24810063	2	Plane Washer		
94	24810065	1	Plug		
96	24810012	1	Nut		
97	24810068	1	Plug		
98	56000083	1	Washer 21-26-1,5		
99	24810071	2	Stud		

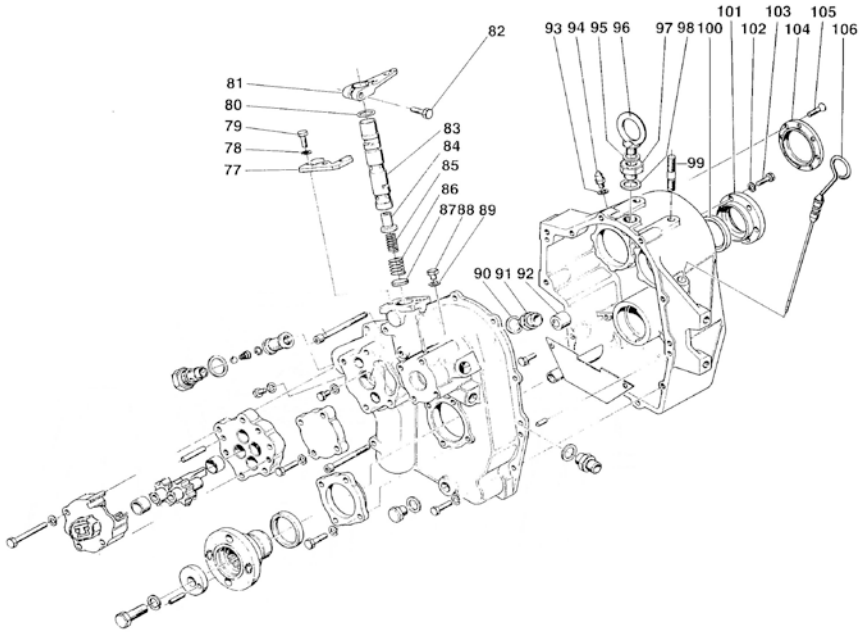

[NP] Not provided

Gearbox TM-93

	D_5030_2		Intermediate Shaft 2/4		
FIG.	REF.	QTY	DESCR.	FROM	UPTO
1	24870207	1	Bearing		
2	24810307	1	Washer		
3	24810309	1	Roller		
4	24810310	1	Ring		
5A	24812302	1	Gear R. 1,5 TM 93		
5B	24813302	1	Gear R. 2 TM 93		
5C	24814302	1	Gear R. 2,4 TM 93		
5D	24815302	1	Gear R. 2,8 TM 93		
6	24810312	1	SNAP Ring		
7	24810313	1	Ring		
8	24810314	1	Grommet		
9	24810315	10	Disk		
10	24810316	9	Disk		
11	24810317	1	BushING		
12	24870118	1	THRUST RACE		
13	24810309	1	Roller		
14	24870318	1	THRUST RACE		
15	24810322	1	Spring		
16	24810323	1	Washer		
17	24810324	1	Piston		
18	24810325	1	Washer		
19	24810326	1	Plug		
20	24810301	1	INTERMEDIATE Shaft		
21	24810328	2	Washer		
22	24810329	1	KEY		
23	24810330	1	Bell		
24	24870206	1	Bearing		
25	24810333	0	Spacer [VAR]		
26	24810334	1	Plug		

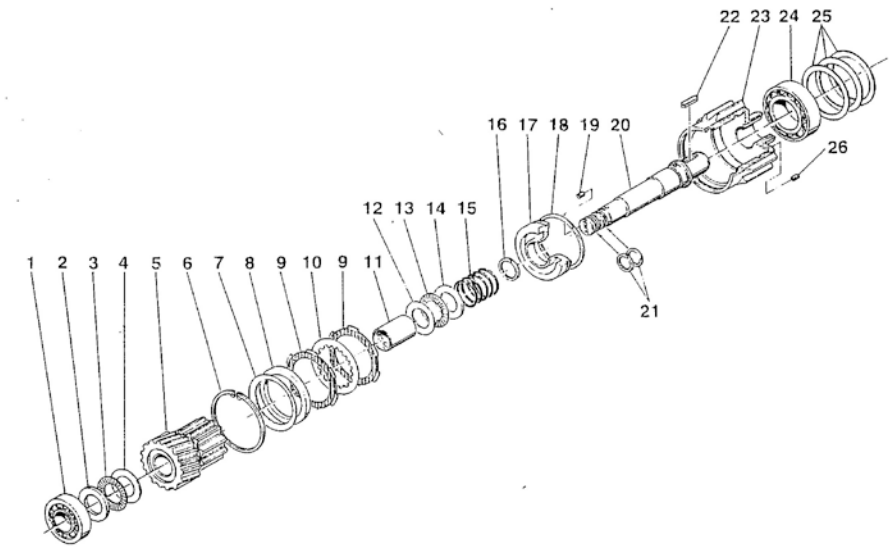

[VAR] Variable according to repair

Gearbox TM-93

	D_5030_3		Input Shaft 3/4		
FIG.	REF.	QTY	DESCR.	FROM	UPTO
27	24870207	1	Bearing		
28	24810307	1	Washer		
29	24810309	1	Roller		
30	(*)	1	Not available [NP]		
31A	24812302	1	Gear R. 1,5 TM 93		
31B	24813302	1	Gear R. 2 TM 93		
31C	24814302	1	Gear R. 2,4 TM 93		
31D	24815302	1	Gear R. 2,8 TM 93		
32	24810312	1	SNAP Ring		
33	24810313	1	Ring		
34	24810314	1	Grommet		
35	24810315	10	Disk		
36	24810316	9	Disk		
37	24810317	1	BushING		
38	24870118	1	THRUST RACE		
39	24810309	1	Roller		
40	24870318	1	THRUST RACE		
41	24810322	1	Spring		
42	24810323	1	Washer		
43	24810324	1	Piston		
44	24810325	1	Washer		
45	24810328	2	Washer		
46	24810326	1	Plug		
47	24810101	1	Input Shaft		
48	24810330	1	Bell		
49	24810329	1	KEY		
50	24810334	1	Plug		
51	24870206	1	Bearing		

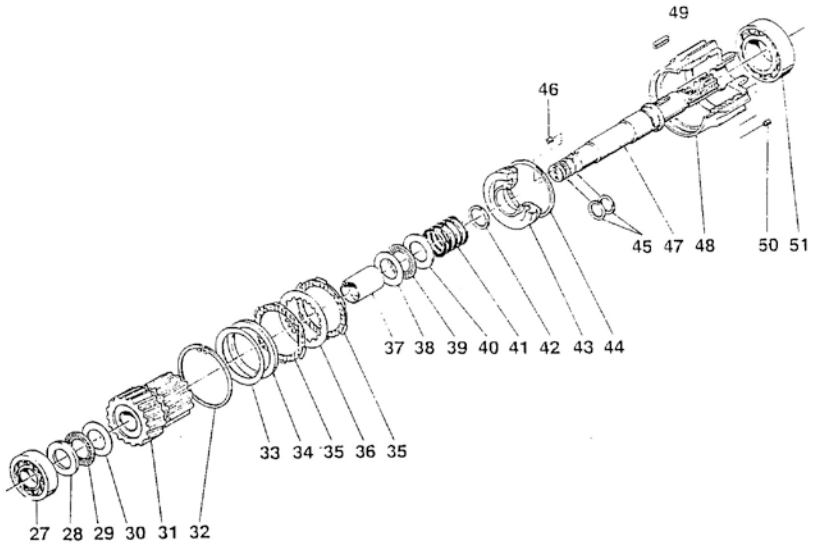

[NP] Not provided

Gearbox TM-93

	D_5030_4		Output Shaft 4/4		
FIG.	REF.	QTY	DESCR.	FROM	UPTO
52	24810206	1	Conical Roller Bearing 32208		
53/55	24812201C	1	Gear+Output Shaft Kit		
53/55	24813201C	1	Gear+Output Shaft Kit		
53/55	24814201C	1	Gear+Output Shaft Kit		
53/55	24815201C	1	Gear+Output Shaft Kit		
54	24810209	1	O-Ring D. 38X3,5		
57	24810212	1	Bearing		

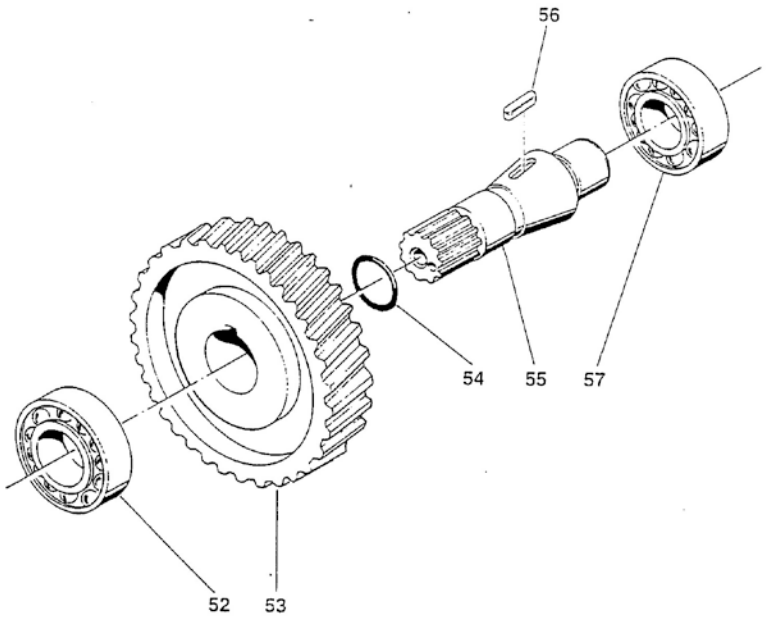

Gearbox TM-93

	D_5030_5		Maintenance Kit		
FIG.	**REF.**	**QTY**	**DESCR.**	**FROM**	**UPTO**
1	24810401	1	Kit Gasket		
2	A0105000	1	15W40 Sole Diesel Oil 5L		
3	24810403	2	Clutch Plate Kit		

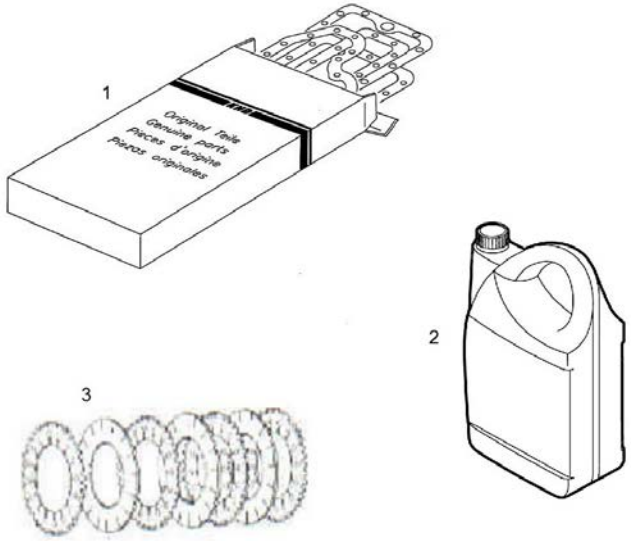

Gearbox TM-93A

D_5031_1.1			Sheet 1.1/4		
FIG.	REF.	QTY	DESCR.	FROM	UPTO
107	24810001A	1	Front Body TM 93A		
108	24810080	1	Plate Pipe [NP]		
109	24810081	1	ASPIRATION Tube [NP]		
110	24810082	2	Bolt DIN 933 M8-10 8.8 [NP]		
113	24810085	2	Pin		
114	24810002A	1	Reverse Body TM 93A		
117	24810088	1	Washer 14-20-1,5 [NP]		
118	24810011	1	Plug,oil drain		
119	24810089	1	Screw		
120	24810090	1	Cover		
125	24810214	1	Oil Grommet		
126	24810224	1	Flange, Output		
127	24810219	1	BUTT Washer		
128	24840220	1	Pin		
129	24810221	1	Washer GROWER DIN 127-14 [NP]		
130	24810222	1	Bolt DIN 933 M14X40 12.9		
131	24810095	1	Gear, ConductOR		
132	24810096	1	Gear, Conduct		
134	24810098	3	Screw		
NS	24810043	1	Pump Assy Oil [NS]		

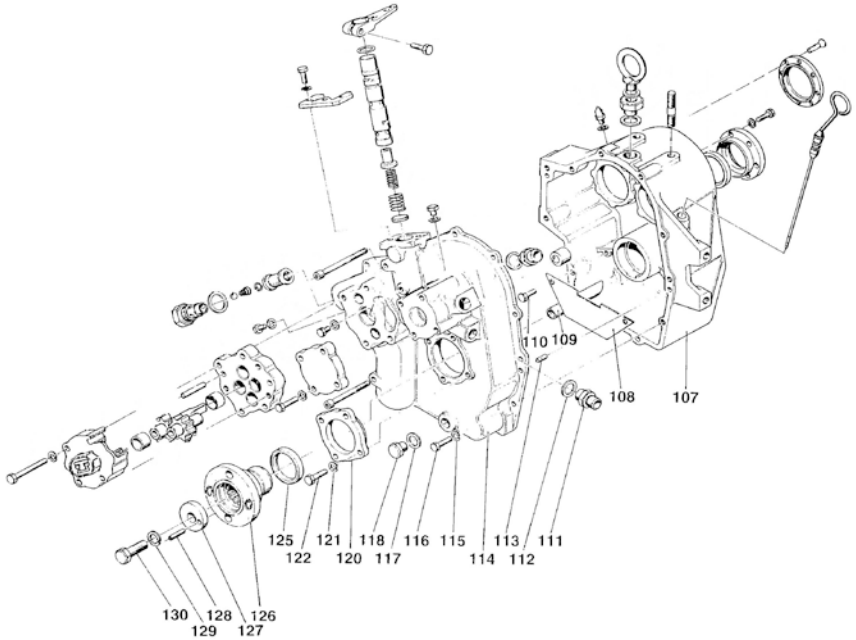

[NP] Not provided
[NS] Not shown

Gearbox TM-93A

D_5030_1.2			Sheet 1.2/4		
FIG.	REF.	QTY	DESCR.	FROM	UPTO
119	24810089	1	Screw		
123	53033008	4	Washer GROWER DIN 127-8		
124	52102258	4	Bolt DIN 933 M8-25 8.8		
131	24810095	1	Gear, ConductOR		
132	24810096	1	Gear, Conduct		
58	24810013	4	Bolt DIN 931 M8-65 8.8 [NP]		
59	24810014	4	Washer GROWER DIN 127-8 [NP]		
61	24810025	2	Bushing		
63	24820023.1	2	Pin		
64	24810024	1	Plug, Oil Filter DRAIN		
67	24810027	1	Washer		
68	24810028	1	Screw		
69	18024143	1	Ball,steel 1/2"		
70	24810030	1	Valve Spring		
71	24810032	1	SNAP Ring		
72	24810035	1	Oil Filter		
73	24810036	2	Washer		
74	24810038	1	Cover		
76	24810040	1	Screw		

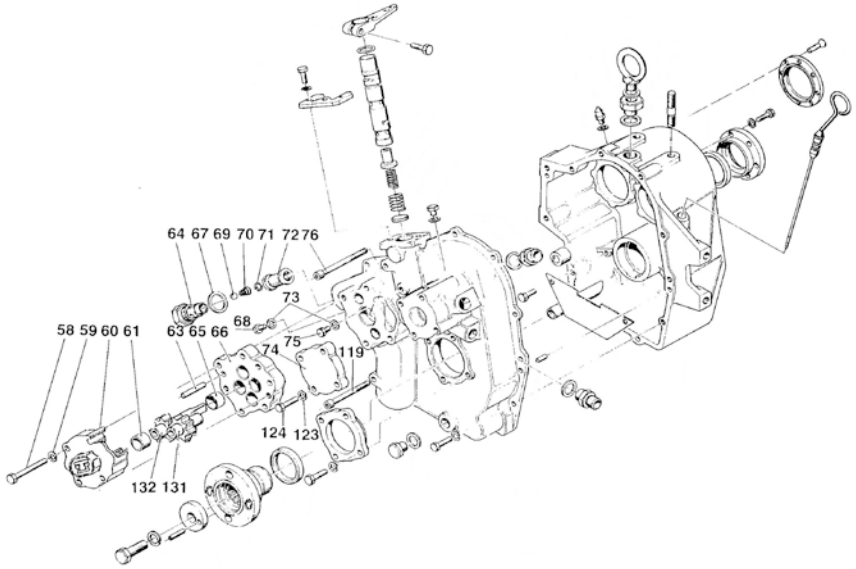

[NP] Not provided

Gearbox TM-93A

D_5030_1.3			Sheet 1.3/4		
FIG.	REF.	QTY	DESCR.	FROM	UPTO
100	24810103S	1	Grommet, Oil SILICON		
101	24810072	1	Cover		
102	53033008	6	Washer GROWER DIN 127-8		
103	52102258	6	Bolt DIN 933 M8-25 8.8		
104	24810075	1	Cover		
105	24810076	8	Screw		
106	24830008	1	ROD, LEVEL Oil		
77	24810041	1	Support		
78	24810042	2	Washer GROWER DIN 127-6 [NP]		
79	24810044	2	Bolt DIN 933 M6-16 8.8 [NP]		
80	24810056	1	O-Ring D. 15,08X2,62 [NP]		
81	24810424	1	Lever		
82	24810047	1	Bolt DIN 933 M8-25 8.8 [NP]		
83	24810051	1	Distributor		
84	24810052	1	Valve		
85	24810053	1	Spring, Valve INNER		
86	24810054	1	Spring, Valve		
87	24810055	1	Expansion Plug		
88	24810028	1	Screw		
89	24810036	1	Washer		
90	24810059	1	Plane Washer		
91	24810060	1	Racord		
92	24810062	1	Valve BY PASS [NP]		
93	24810063	2	Plane Washer		
94	24810065	1	Plug		
96	24810012	1	Nut		
97	24810068	1	Plug		
98	56000083	1	Washer 21-26-1,5		
99	24810071	2	Stud		

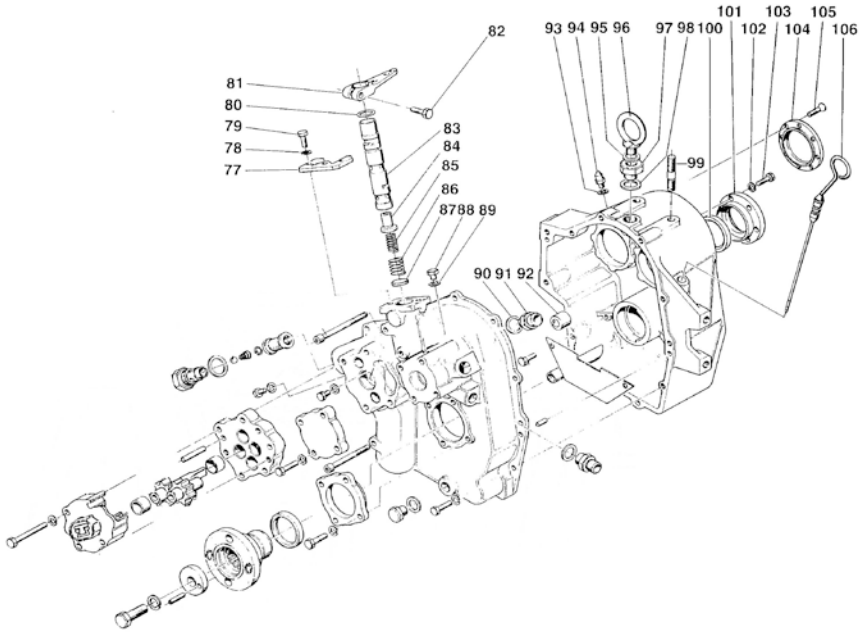

[NP] Not provided

Gearbox TM-93A

D_5031_2			Intermediate Shaft 2/4		
FIG.	REF.	QTY	DESCR.	FROM	UPTO
1	24870207	1	Bearing		
2	24810307	1	Washer		
3	24810309	1	Roller		
4	24810310	1	Ring		
5	24812302A	1	Gear R. 1,5 TM 93A		
5	24814302A	1	Gear R. 2,4 TM 93A		
5	24813302A	1	Gear Red. 2 TM 93A		
6	24810312	1	SNAP Ring		
7	24810313	1	Ring		
8	24810314	1	Grommet		
9	24810315	10	Disk		
10	24810316	9	Disk		
11	24810317	1	BushING		
12	24870118	1	THRUST RACE		
13	24810309	1	Roller		
14	24870318	1	THRUST RACE		
15	24810322	1	Spring		
16	24810323	1	Washer		
17	24810324	1	Piston		
18	24810325	1	Washer		
19	24810326	1	Plug		
20	24810301	1	INTERMEDIATE Shaft		
21	24810328	2	Washer		
22	24810329	1	KEY		
23	24810330	1	Bell		
24	24870206	1	Bearing		
25	24810333	0	Spacer [VAR]		
26	24810334	1	Plug		

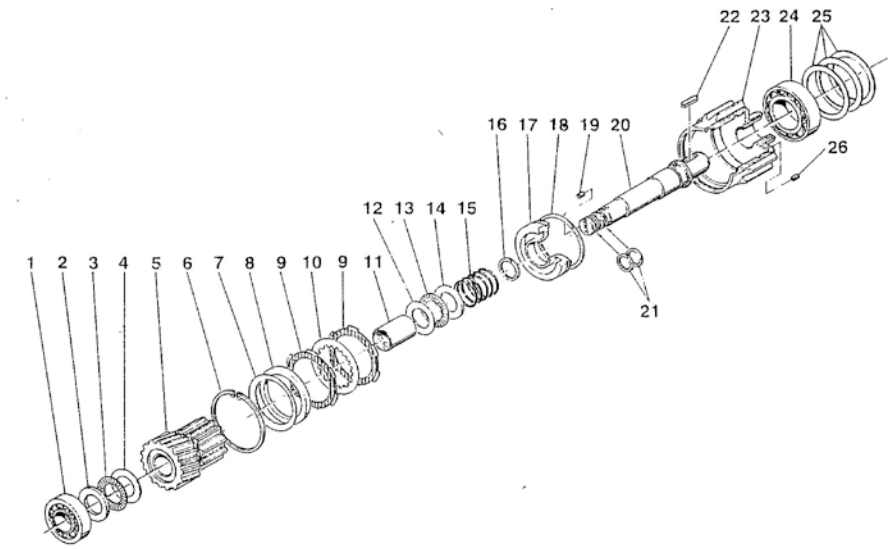

[VAR] Variable according to repair

Gearbox TM-93A

D_5031_3			Input Shaft 3/4		
FIG.	REF.	QTY	DESCR.	FROM	UPTO
27	24870207	1	Bearing		
28	24810307	1	Washer		
29	24810309	1	Roller		
30	(*)	1	Not available [NP]		
31	24812302	1	Gear R. 1,5 TM 93		
31	24814302	1	Gear R. 2,4 TM 93		
31	24813302	1	Gear R. 2 TM 93		
32	24810312	1	SNAP Ring		
33	24810313	1	Ring		
34	24810314	1	Grommet		
35	24810315	10	Disk		
36	24810316	9	Disk		
37	24810317	1	BushING		
38	24870118	1	THRUST RACE		
39	24810309	1	Roller		
40	24870318	1	THRUST RACE		
41	24810322	1	Spring		
42	24810323	1	Washer		
43	24810324	1	Piston		
44	24810325	1	Washer		
45	24810328	2	Washer		
46	24810326	1	Plug		
47	24810101	1	Input Shaft		
48	24810330	1	Bell		
49	24810329	1	KEY		
50	24810334	1	Plug		
51	24870206	1	Bearing		

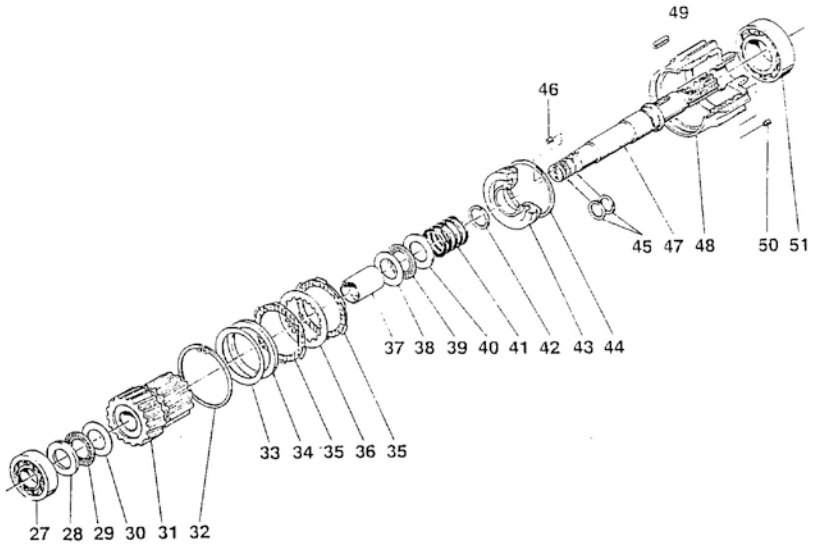

[NP] Not provided

Gearbox TM-93A

D_5031_4			Output Shaft 4/4		
FIG.	REF.	QTY	DESCR.	FROM	UPTO
52	24810206	1	Conical Roller Bearing 32208		
53/55	24813201AC	1	Gear+Output Shaft Kit		
53/55	24814201AC	1	Gear+Output Shaft Kit		
53/55	24812201AC	1	Gear+Output Shaft Kit		
54	24810209	1	O-Ring D. 38X3,5		
57	24810212	1	Bearing		

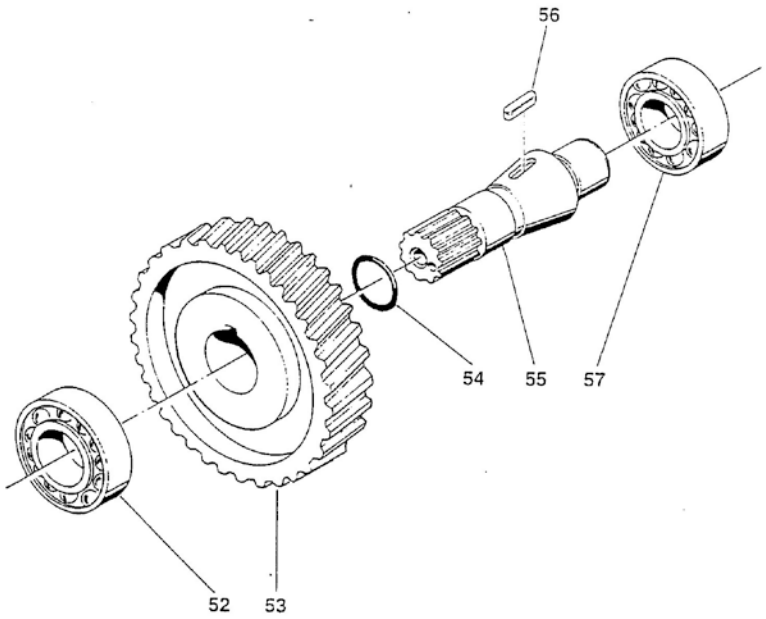

Gearbox TM-93A

	D_5030_5		Maintenance Kit		
FIG.	**REF.**	**QTY**	**DESCR.**	**FROM**	**UPTO**
1	24810401	1	Kit Gasket		
2	A0105000	1	15W40 Sole Diesel Oil 5L		
3	24810403	2	Clutch Plate Kit		

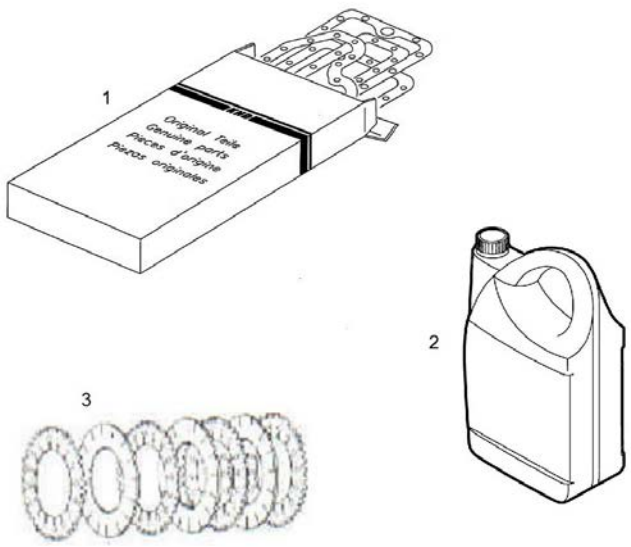

Kit Gearbox

17410110.1			Kit Z-Drive VOLVO 280/290 Z=26		
FIG.	REF.	QTY	DESCR.	FROM	UPTO
1	16510170	1	Flexible Coupling Type C SAE 11"1/2		
2	53038010	8	Washer DIN 6798-A 10		
3	52103308	8	Bolt DIN 912 M10-25 8.8		
4	14910012	1	Bell,housing reverser		
5	53033010	12	Washer GROWER DIN 127-10		
6	52102309	12	Bolt DIN 933 M10-30 8.8		
7	17410110.1R	1	Kit Z-Drive Volvo 280/290 Z=26		
8	53038012	6	Washer DIN 6798-A 12		
9	52301309	6	Bolt DIN 931 W7/16-30 8.8		
NS	M87503040	1	Water Intake Hose (HQ) D. 30-38 [NS]		
NS	14711030	1	Hose [NS]		
NS	14711031	1	Hose [NS]		
NS	54082025	2	Clamp DIN 3017 25-40/12 W4 [NS]		
NS	58088281	1	Pastic Cable Zip Tie [NS]		

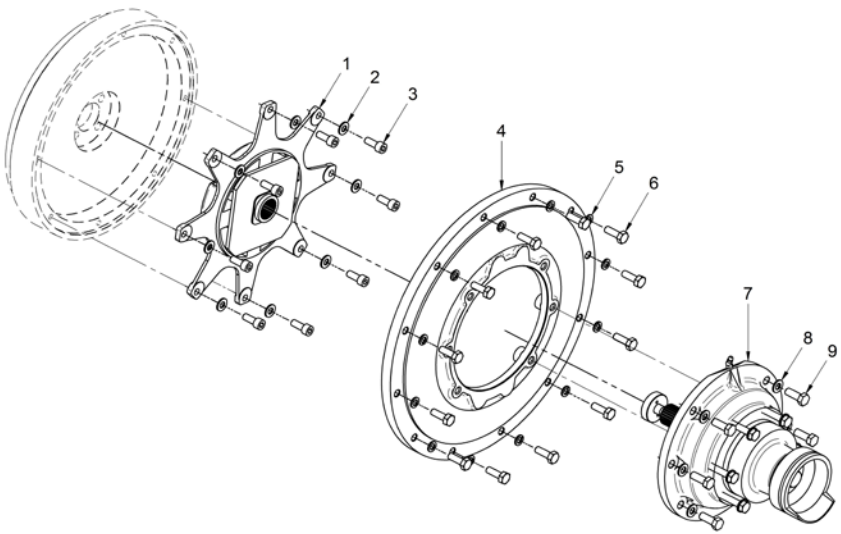

[NS] Not shown

Kit Gearbox

17410110.2			Kit Z-Drive Volvo 280/290 Z=10		
FIG.	REF.	QTY	DESCR.	FROM	UPTO
1	16510170	1	Flexible Coupling Type C SAE 11"1/2		
2	53038010	8	Washer DIN 6798-A 10		
3	52103308	8	Bolt DIN 912 M10-25 8.8		
4	14910012	1	Bell,housing reverser		
5	53033010	12	Washer GROWER DIN 127-10		
6	52102309	12	Bolt DIN 933 M10-30 8.8		
7	17410110.2R	1	Kit Z-Drive Volvo 280/290 Z=10		
8	53038012	6	Washer DIN 6798-A 12		
9	52301309	6	Bolt DIN 931 W7/16-30 8.8		
NS	M87503040	1	Water Intake Hose (HQ) D. 30-38 [NS]		
NS	14711030	1	Hose [NS]		
NS	14711031	1	Hose [NS]		
NS	54082025	2	Clamp DIN 3017 25-40/12 W4 [NS]		
NS	58088281	1	Pastic Cable Zip Tie [NS]		

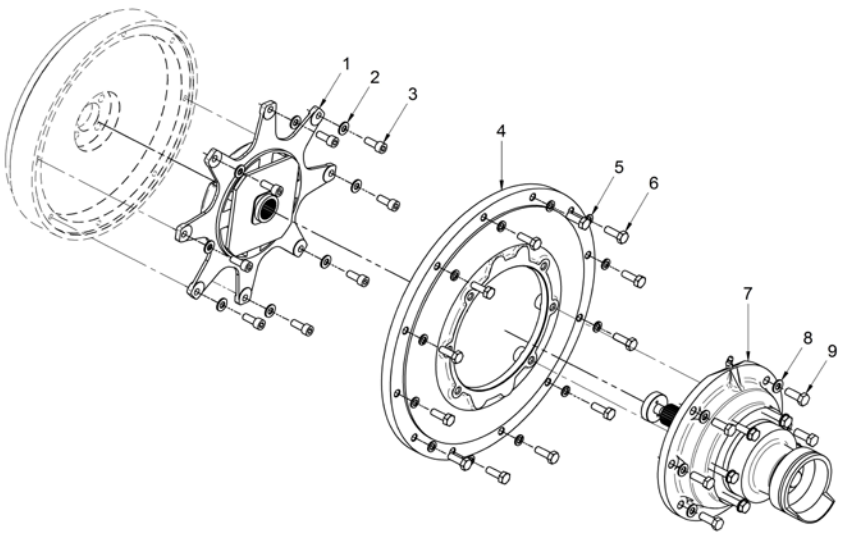

[NS] Not shown

Kit Gearbox

	17410223		Kit GearBox ZF-63IV		
FIG.	**REF.**	**QTY**	**DESCR.**	**FROM**	**UPTO**
1	16510170	1	Flexible Coupling Type C SAE 11"1/2		
2	53038010	8	Washer DIN 6798-A 10		
3	52103312	8	Bolt DIN 912 M10-45 8.8		
4	14910012	1	Bell,housing reverser		
5	53033010	16	Washer GROWER DIN 127-10		
6	52102309	12	Bolt DIN 933 M10-30 8.8		
7	53038012	6	Washer DIN 6798-A 12		
8	52301311	5	Bolt DIN 931 W7/16-40 8.8		17/07/2017
8	52302310	5	Bolt DIN 933 W7/16-35 8.8	18/07/2017	
9	ALLPA.93	1	Coupling,cable	23/05/2017	
9	14719115	1	Coupling,cable		23/05/2017
10	51030006	6	Washer DIN 125-6		
11	51051107	1	Pin DIN-94 1,6-16		
12	52102157	2	Bolt DIN 933 M6-20 8.8		
13	55307104	2	Bolt DIN 86 W3/16-10		
14	14719013	1	Clamp,cable		
15	12119021	1	SUPORT Clamp		
16	16519020	1	Bracket, Gear box control		
17	53033006	2	Washer GROWER DIN 127-6		
18	52120006	2	Nut DIN 934 M6 8.8		
19	52320716	1	Nut DIN 934 W 7/16 8.8		
20	17510004	1	Stud 7/16Wx44		
21	54082025	4	Clamp DIN 3017 25-40/12 W4		
22	15312007	2	Cover, water cooler D 30		
23	54082050	2	Clamp DIN 3017 50-70/12 W4		
24	57000375	4	Washer 17-22-1,5		
25	17017102	2	Spacer 10,5X22X46		
26	14712015	2	Bolt,Coupling pipe oil		
27	16512010	1	Bracket,oil cooler		
28	17511009	1	Hose		
29	18011026	1	Pipe		
30	14712051	1	Cooler,oil		
31	51083060	1	Clamp "P" 59-63		
32	18512024	2	Pipe		
33	17410022	1	Flywheel Supplement		

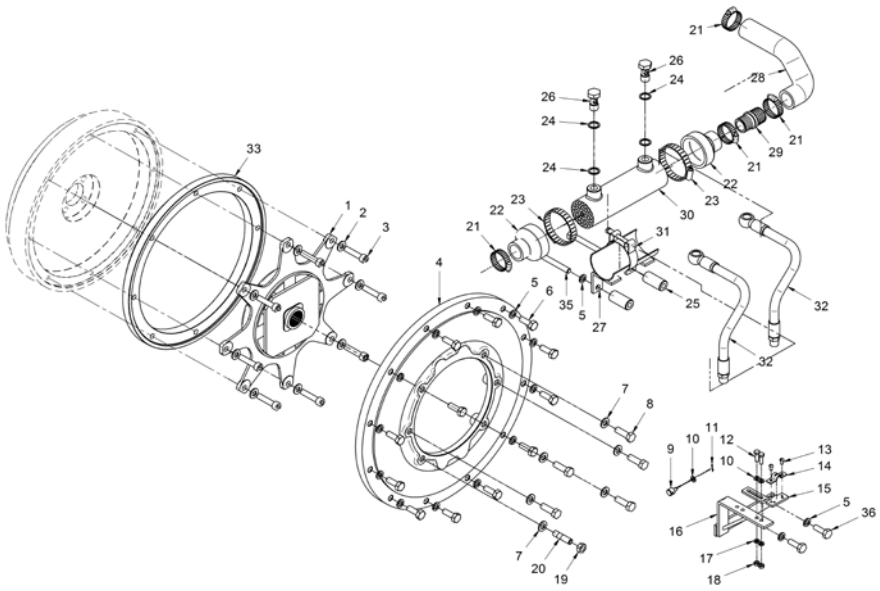

Kit Gearbox

	17410223		Kit GearBox ZF-63IV		
FIG.	**REF.**	**QTY**	**DESCR.**	**FROM**	**UPTO**
35	52101319	2	Bolt DIN 931 M10-80 8.8		
36	52302258	2	Bolt DIN 933 W3/8-25 8.8		

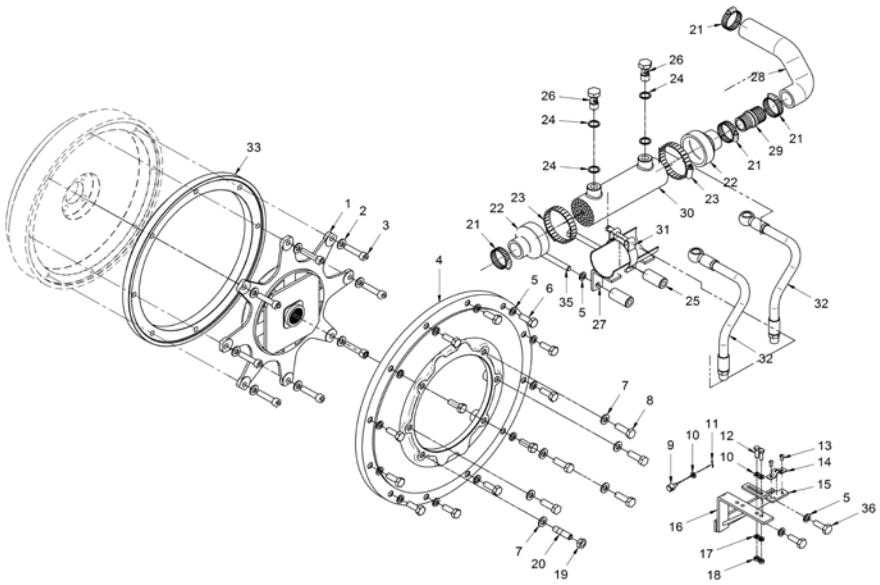

Kit Gearbox

	17410228		Kit SAE 7		
FIG.	**REF.**	**QTY**	**DESCR.**	**FROM**	**UPTO**
1	14910012	1	Bell,housing reverser		
2	53033010	12	Washer GROWER DIN 127-10		
3	52102309	12	Bolt DIN 933 M10-30 8.8		

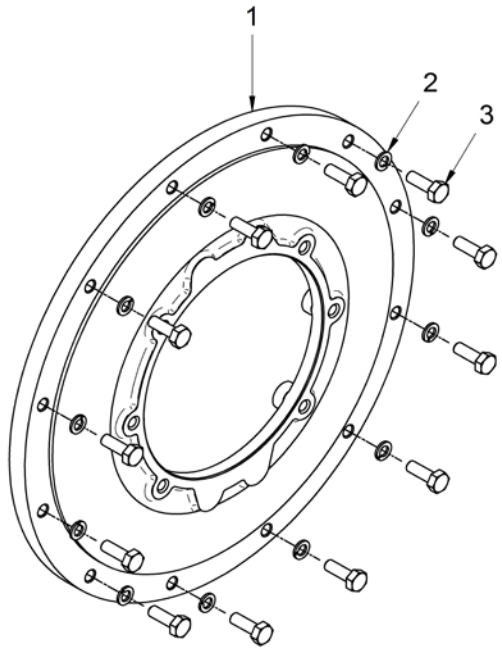

Kit Gearbox

	17510200		Kit GearBox TM-93/A		
FIG.	**REF.**	**QTY**	**DESCR.**	**FROM**	**UPTO**
1	16510170	1	Flexible Coupling Type C SAE 11"1/2		
2	53038010	8	Washer DIN 6798-A 10		
3	52103308	8	Bolt DIN 912 M10-25 8.8		
5	53033010	14	Washer GROWER DIN 127-10		
6	24810021	1	SAE3 Housing TM-93 and 170		
7	52102309	12	Bolt DIN 933 M10-30 8.8		
8	52102306	1	Bolt DIN 933 M10-15 8.8	06/06/2007	
9	56000061	1	Washer 10-16-1,5		
10	ALLPA.93	1	Coupling,cable	23/05/2017	
10	14719115	1	Coupling,cable		23/05/2017
11	51030006	4	Washer DIN 125-6		
12	51051107	1	Pin DIN-94 1,6-16		
13	52102256	2	Bolt DIN 933 M8-15 8.8		
14	53033008	6	Washer GROWER DIN 127-8		
15	51030008	6	Washer DIN 125-8		
16	18619020	1	Bracket,Gear box control		
17	51030005	2	Washer DIN 125-5		
18	24810913	1	Clamp,CABLE		
19	51030010	2	Washer DIN 125-10		
20	52120010	2	Nut DIN 934 M10 8.8		
21	52102257	4	Bolt DIN 933 M8-20 8.8		
22	18012041	1	Bracket,TM93/170 oil cooler		
23	14712015	2	Bolt,Coupling pipe oil		
24	57000375	4	Washer 17-22-1,5		
25	54082025	4	Clamp DIN 3017 25-40/12 W4		
26	17511009	1	Hose		
27	18011026	1	Pipe		
28	15312007	2	Cover, water cooler D 30		
29	54082050	2	Clamp DIN 3017 50-70/12 W4		
30	14712051	1	Cooler,oil		
31	52120008	4	Nut DIN 934 M8 8.8		
32	59072604	2	Clamp	29/03/2014	
33	17112024	2	Pipe, rev.oil Cooler		

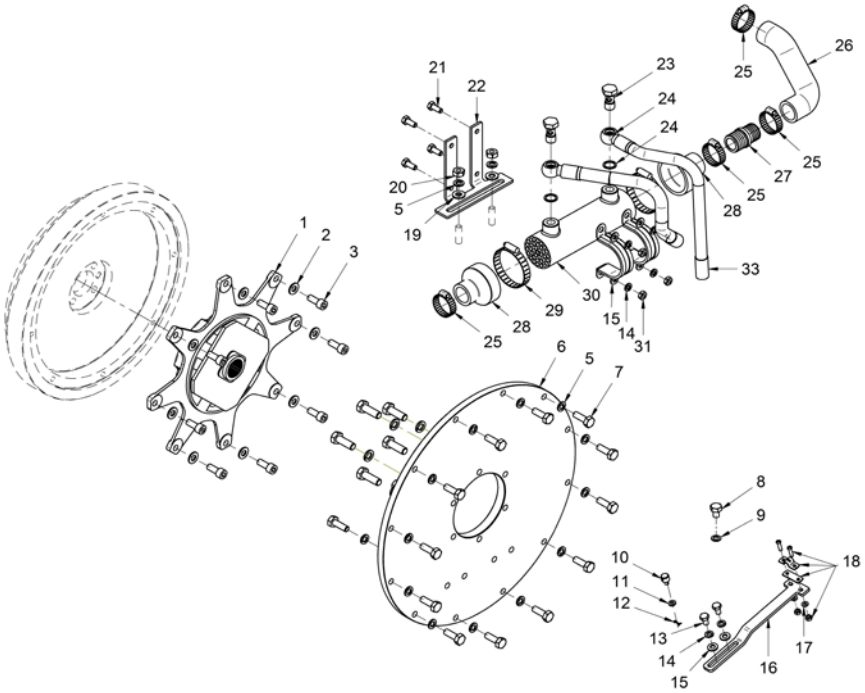

Kit Gearbox

17510210			Kit GearBox TM-170/170A/880A		
FIG.	**REF.**	**QTY**	**DESCR.**	**FROM**	**UPTO**
1	16510170	1	Flexible Coupling Type C SAE 11"1/2		
2	53038010	8	Washer DIN 6798-A 10		
3	52103308	8	Bolt DIN 912 M10-25 8.8		
4	24810021	1	SAE3 Housing TM-93 and 170		
5	53033010	14	Washer GROWER DIN 127-10		
6	52102309	12	Bolt DIN 933 M10-30 8.8		
7	52102306	1	Bolt DIN 933 M10-15 8.8	06/06/2007	
8	56000061	1	Washer 10-16-1,5		
9	24810913	1	Clamp,CABLE		
10	51030005	2	Washer DIN 125-5		
11	18619020	1	Bracket,Gear box control		
12	51051107	1	Pin DIN-94 1,6-16		
14	ALLPA.93	1	Coupling,cable	23/05/2017	
14	14719115	1	Coupling,cable		23/05/2017
15	51030008	6	Washer DIN 125-8		
16	53033008	6	Washer GROWER DIN 127-8		
17	52120008	6	Nut DIN 934 M8 8.8		
18	17511009	1	Hose		
19	54082025	4	Clamp DIN 3017 25-40/12 W4		
20	15312007	2	Cover, water cooler D 30		
21	54082050	2	Clamp DIN 3017 50-70/12 W4		
22	14712051	1	Cooler,oil		
23	52120010	2	Nut DIN 934 M10 8.8		
24	51030010	2	Washer DIN 125-10		
25	18012041	1	Bracket,TM93/170 oil cooler		
26	52102257	4	Bolt DIN 933 M8-20 8.8		
27	18011026	1	Pipe		
28	59072604	2	Clamp	29/03/2014	
29	57000375	4	Washer 17-22-1,5		
30	14712015	2	Bolt,Coupling pipe oil		
31	17112024	2	Pipe, rev.oil Cooler		
NS	51030006	3	Washer DIN 125-6 [NS]	23/05/2017	

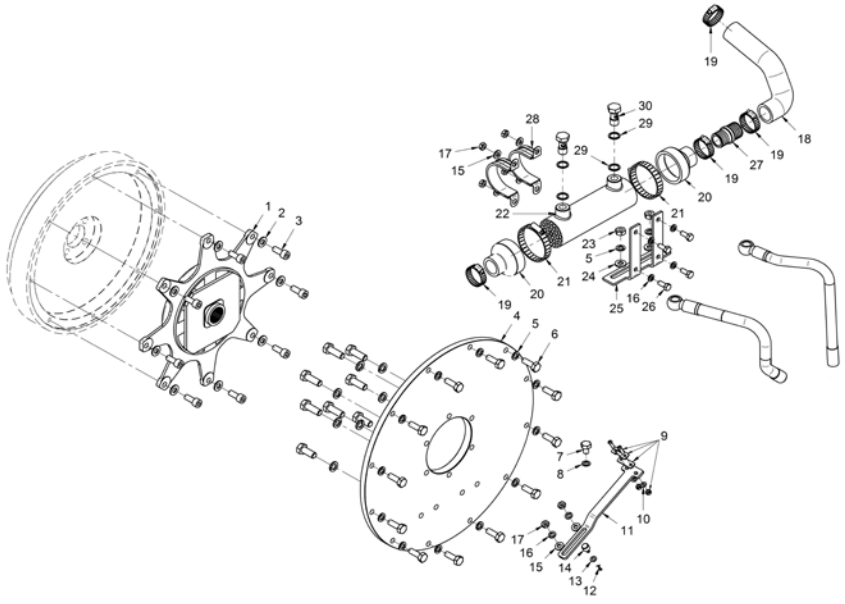

[NS] Not shown

Kit Gearbox

	17510215		Kit GearBox TM-265/A		
FIG.	**REF.**	**QTY**	**DESCR.**	**FROM**	**UPTO**
1	53038010	8	Washer DIN 6798-A 10		
2	52103308	8	Bolt DIN 912 M10-25 8.8		
3	53033010	14	Washer GROWER DIN 127-10		
4	52102308	12	Bolt DIN 933 M10-25 8.8		
5	16710007	2	Bracket,REVERSE TM 265		
6	53033016C	8	Washer	10/12/2009	
7	52102461	8	Bolt DIN 933 M16-40 8.8		
8	24810913	1	Clamp,CABLE		
9	51030005	2	Washer DIN 125-5		
10	ALLPA.93	1	Coupling,cable	23/05/2017	
10	14719115	1	Coupling,cable		23/05/2017
11	51030006	4	Washer DIN 125-6		
12	51051107	1	Pin DIN-94 1,6-16		
13	52102306	1	Bolt DIN 933 M10-15 8.8	06/06/2007	
14	56000061	1	Washer 10-16-1,5		
15	18619020	1	Bracket,Gear box control		
16	52102256	2	Bolt DIN 933 M8-15 8.8		
17	53033008	2	Washer GROWER DIN 127-8		
18	51030008	2	Washer DIN 125-8		
19	17511016	1	Pipe		
20	54082025	4	Clamp DIN 3017 25-40/12 W4		
21	13611038	1	Pipe 30-40-75		
22	60180007	1	Outlet Coupling	20/02/2014	
23	52103158	8	Bolt DIN 912 M6-25 8.8		
24	14712002	2	Cover, water cooler		
25	14712004	2	O-Ring D. 72X4		
26	14712003	1	Element,oil cooler		
27	14712001	1	Body,cooler		
28	57000375	4	Washer 17-22-1,5		
29	14712015	2	Bolt,Coupling pipe oil		
30	14711021	1	Hose Nº 1		
31	16511020	1	Pipe 30-40-175		
32	17512019	1	Bracket, Cooler Oil		
33	52103256	4	Bolt DIN 912 M8-15 8.8		
34	52120010	2	Nut DIN 934 M10 8.8		

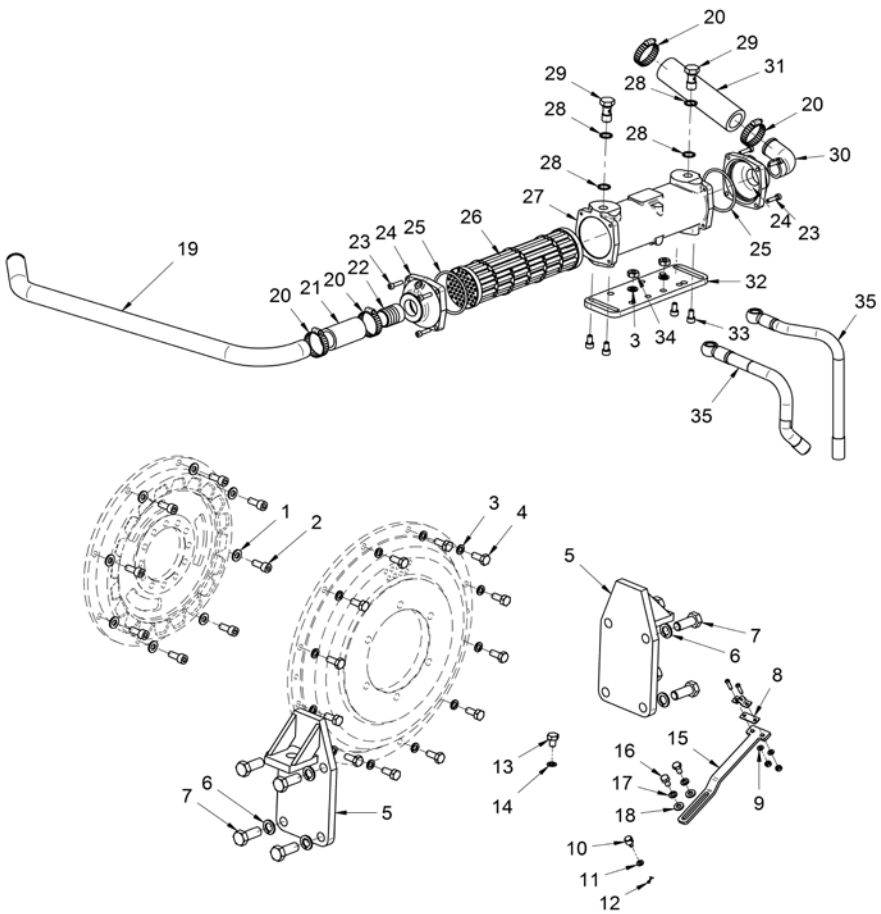

Kit Gearbox

	17510215		Kit GearBox TM-265/A		
FIG.	**REF.**	**QTY**	**DESCR.**	**FROM**	**UPTO**
35	17112024	2	Pipe, rev.oil Cooler		

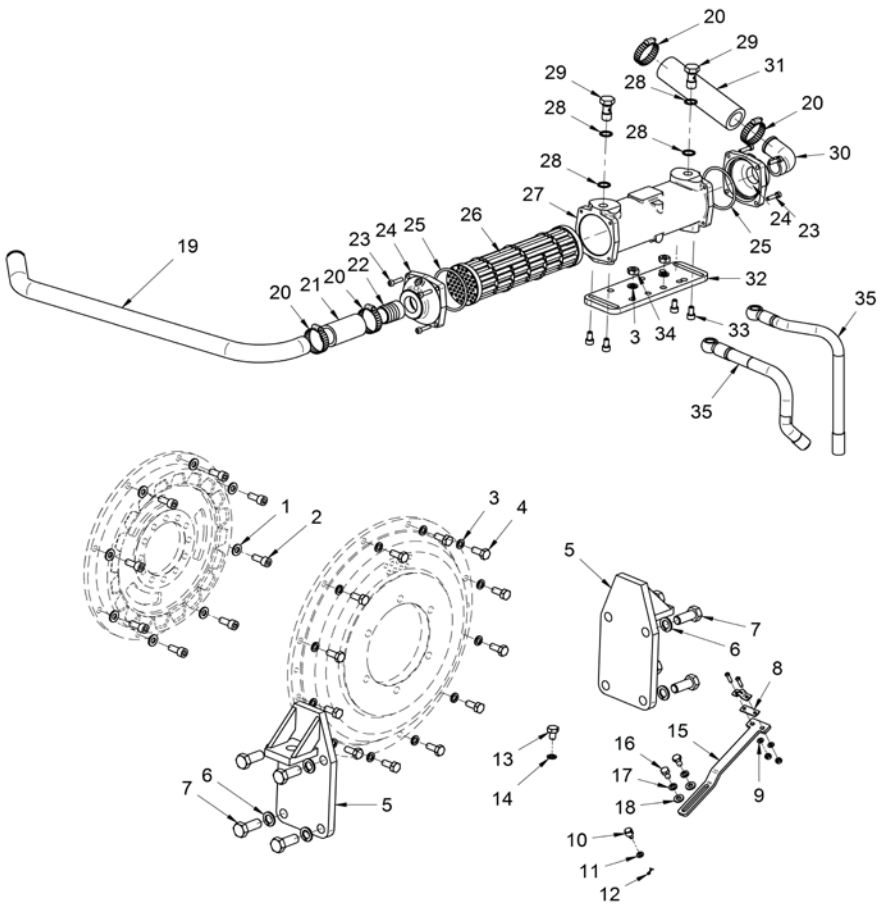

Kit Gearbox

	17510220		Kit REV.BW For SM-105		
FIG.	REF.	QTY	DESCR.	FROM	UPTO
1	16510170	1	Flexible Coupling Type C SAE 11"1/2		
2	53038010	8	Washer DIN 6798-A 10		
3	52103308	8	Bolt DIN 912 M10-25 8.8		
4	14910012	1	Bell,housing reverser		
5	53033010	12	Washer GROWER DIN 127-10		
6	52102309	12	Bolt DIN 933 M10-30 8.8		
7	53033012	8	Washer GROWER DIN 127-12		
8	52301319	6	Bolt DIN 931 W7/16-80 8.8		
9	52302309	2	Bolt DIN 933 W7/16-30 8.8		
10	17112019	1	Bracket,Cooler Oil		
11	54083063	2	Clamp GBS 63-68 W4 STC		
12	57000375	7	Washer 17-22-1,5		
13	14712032	1	Coupling,ball pipe oil		
14	14712031	4	Retainer		
15	54082025	6	Clamp DIN 3017 25-40/12 W4		
16	15312007	2	Cover, water cooler D 30		
17	54082050	2	Clamp DIN 3017 50-70/12 W4		
18	14712051	1	Cooler,oil		
19	14712035	3	Collar, Union		
20	14712015	3	Bolt,Coupling pipe oil		
21	18011020	1	Pipe		
22	15212022	2	Elbow	15/02/2017	
22	15312009	2	Elbow		14/02/2017
NS	M84501019	1	LOW Pressure Hose D. 10-19 [NS]	23/10/2008	
NS	M87503242	1	Water Intake Hose (HQ) D. 32-42 [NS]		
NS	51030008	4	Washer DIN 125-8 [NS]		
NS	51083060	2	Clamp "P" 59-63 [NS]		

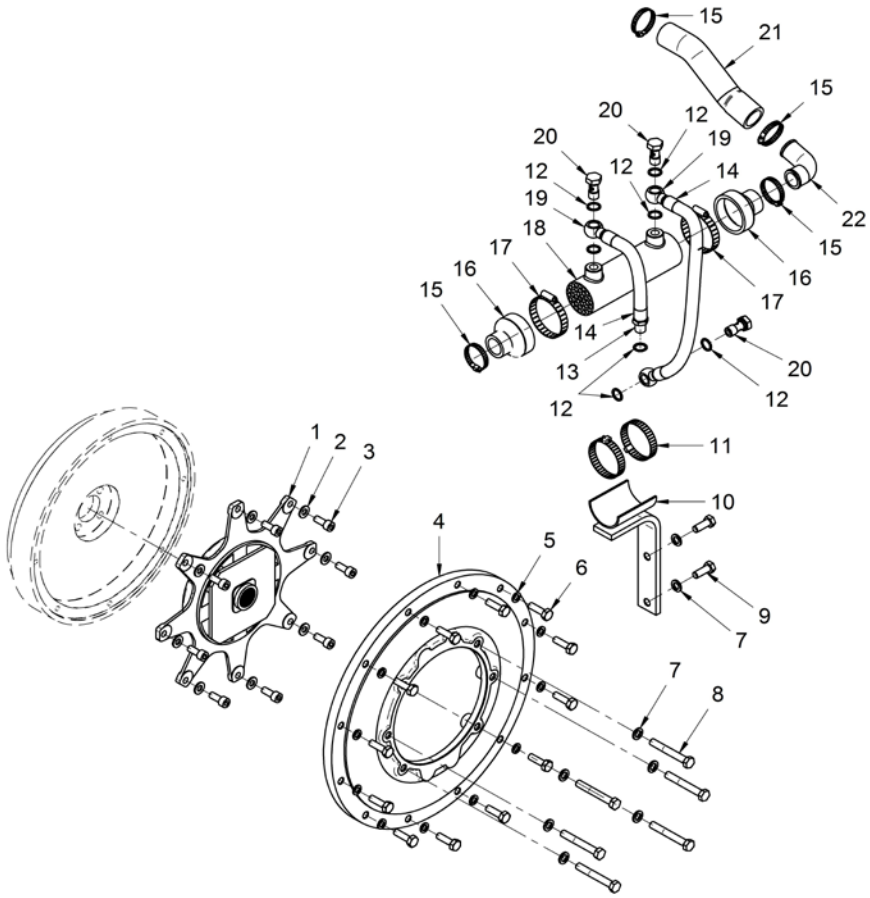

[NS] Not shown

Kit Gearbox

	17510222		Kit GearBox PRM-750 IN-LINE		
FIG.	REF.	QTY	DESCR.	FROM	UPTO
1	16510170	1	Flexible Coupling Type C SAE 11"1/2		
2	53038010	8	Washer DIN 6798-A 10		
3	52103308	8	Bolt DIN 912 M10-25 8.8		
4	14910012	1	Bell,housing reverser		
5	53033010	18	Washer GROWER DIN 127-10		
6	52102310	12	Bolt DIN 933 M10-35 8.8		
7	53033011	6	Washer GROWER DIN 127-11		
8	52301309	6	Bolt DIN 931 W7/16-30 8.8		
9	52102157	2	Bolt DIN 933 M6-20 8.8		
10	51030006	8	Washer DIN 125-6		
11	51051107	1	Pin DIN-94 1,6-16		
12	ALLPA.93	1	Coupling,cable	23/05/2017	
12	14719115	1	Coupling,cable		23/05/2017
13	12119000	1	Assy Bracket,morse control		
14	16519023	1	Bracket,morse rev.PRMINI-302/402		
15	53033006	2	Washer GROWER DIN 127-6		
16	52120006	2	Nut DIN 934 M6 8.8		
17	16512050	1	Oil Cooler,bracket		
18	51083060	2	Clamp "P" 59-63		
19	54082025	2	Clamp DIN 3017 25-40/12 W4		
20	15312007	2	Cover, water cooler D 30		
21	54082050	2	Clamp DIN 3017 50-70/12 W4		
22	14712051	1	Cooler,oil		
23	57000375	4	Washer 17-22-1,5		
24	14712015	2	Bolt,Coupling pipe oil		
25	54081025	3	Clamp DIN 3017 25-40/9 W4		
26	18011020	1	Pipe		
27	15212022	2	Elbow	15/02/2017	
27	15312009	2	Elbow		14/02/2017
NS	M87503040	1	Water Intake Hose (HQ) D. 30-38 [NS]		
NS	18512022	2	Pipe [NS]		
NS	51030008	4	Washer DIN 125-8 [NS]		
NS	52102257	4	Bolt DIN 933 M8-20 8.8 [NS]		
NS	52120008	4	Nut DIN 934 M8 8.8 [NS]		
NS	53033008	4	Washer GROWER DIN 127-8 [NS]		

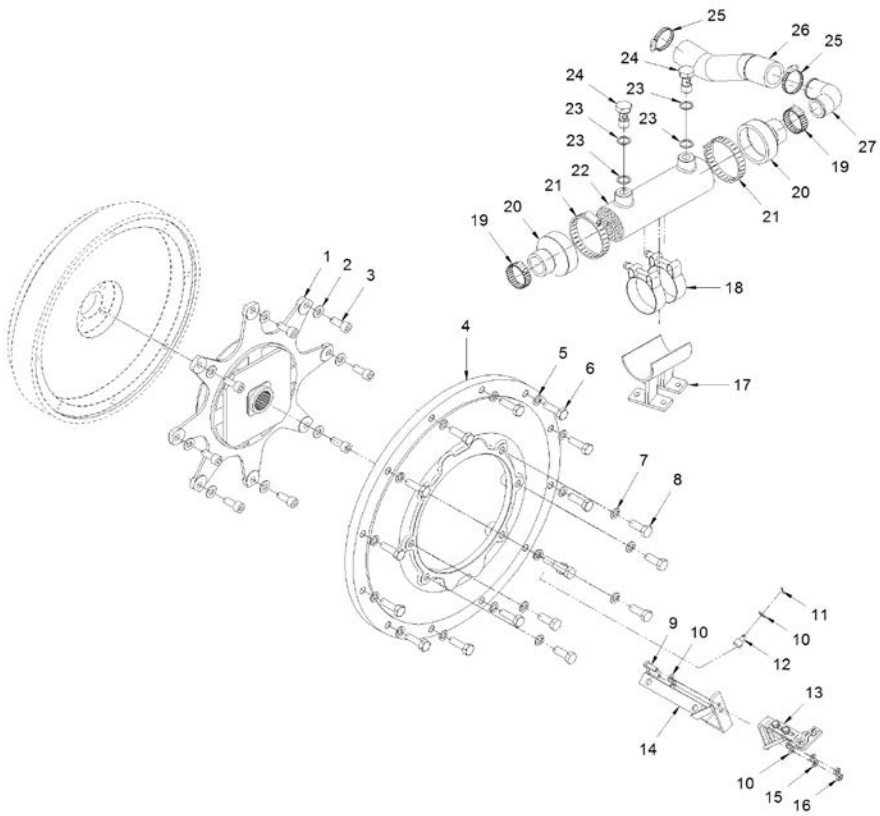

[NS] Not shown

Kit Gearbox

17510222			Kit GearBox PRM-750 IN-LINE		
FIG.	**REF.**	**QTY**	**DESCR.**	**FROM**	**UPTO**
NS	53033012	8	Washer GROWER DIN 127-12 [NS]		
NS	56000083	4	Washer 21-26-1,5 [NS]		
NS	58088281	2	Pastic Cable Zip Tie [NS]		

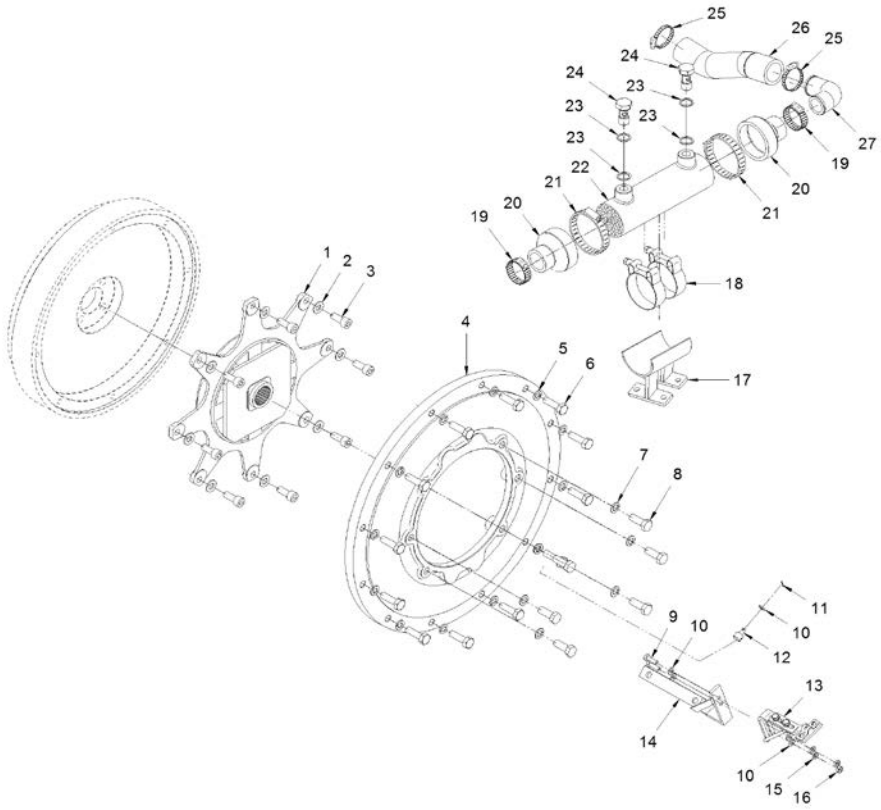

Kit Gearbox

	17510224		Kit GearBox TM-485A1		
FIG.	**REF.**	**QTY**	**DESCR.**	**FROM**	**UPTO**
1	16510170	1	Flexible Coupling Type C SAE 11"1/2		
2	53038010	12	Washer DIN 6798-A 10		
3	52103308	8	Bolt DIN 912 M10-25 8.8		
4	14910012	1	Bell,housing reverser		
5	53033010	12	Washer GROWER DIN 127-10		
6	52102309	12	Bolt DIN 933 M10-30 8.8		
7	53038012	6	Washer DIN 6798-A 12		
8	52302309	5	Bolt DIN 933 W7/16-30 8.8		
9	52320716	2	Nut DIN 934 W 7/16 8.8		
10	17510004	2	Stud 7/16Wx44		
11	54082025	6	Clamp DIN 3017 25-40/12 W4		
12	15312007	2	Cover, water cooler D 30		
13	54082050	2	Clamp DIN 3017 50-70/12 W4		
14	14712051	1	Cooler,oil		
15	51030008	4	Washer DIN 125-8		
16	52120008	6	Nut DIN 934 M8 8.8		
17	59072604	2	Clamp	29/03/2014	
18	57000375	7	Washer 17-22-1,5		
19	14712015	3	Bolt,Coupling pipe oil		
20	53033008	8	Washer GROWER DIN 127-8		
21	51031008	2	Washer DIN 9021 8		
22	18012041	1	Bracket,TM93/170 oil cooler		
23	12120018	2	Stud		
24	52102257	6	Bolt DIN 933 M8-20 8.8		
25	17512011	1	Pipe		
26	17512010	1	Pipe		
NS	17519003	1	Bracket Spacer, Engine Control [NS]		
NS	24810913	1	Clamp,CABLE [NS]		
NS	52102112	2	Bolt DIN 933 M5-45 8.8 CINCADO [NS]		

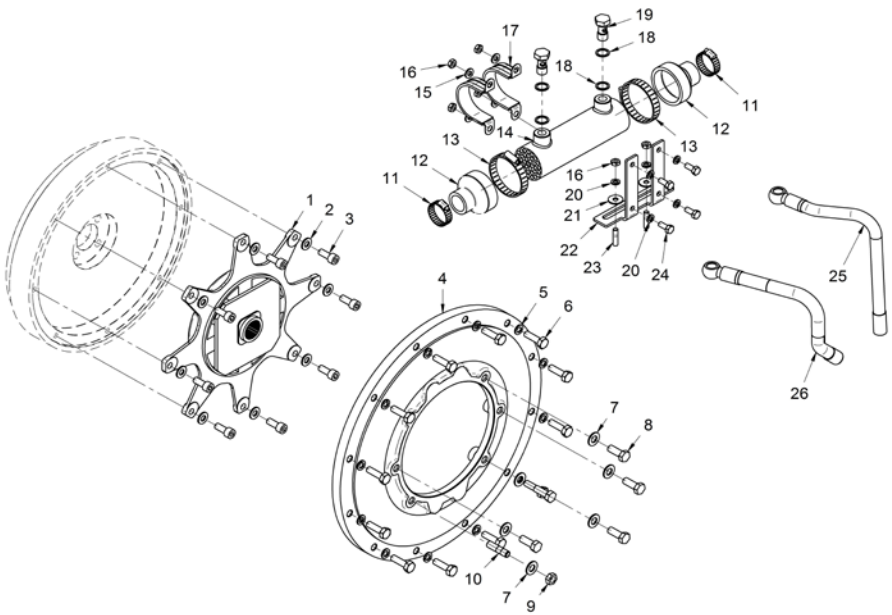

[NS] Not shown

Kit Gearbox

	17510225		Kit GearBox PRM-500		
FIG.	**REF.**	**QTY**	**DESCR.**	**FROM**	**UPTO**
1	24610022	1	Damper		
2	53033010	18	Washer GROWER DIN 127-10		
3	52103308	6	Bolt DIN 912 M10-25 8.8		
4	24230022	1	Adaptor Flange. PRM-302 SAE 3		
5	52102310	12	Bolt DIN 933 M10-35 8.8		
6	51051107	1	Pin DIN-94 1,6-16		
7	51030006	6	Washer DIN 125-6		
8	ALLPA.93	1	Coupling,cable	23/05/2017	
8	14719115	1	Coupling,cable		23/05/2017
9	52120006	2	Nut DIN 934 M6 8.8		
10	53033006	2	Washer GROWER DIN 127-6		
11	12119000	1	Assy Bracket,morse control		
12	16519023	1	Bracket,morse rev.PRMINI-302/402		
13	52102157	2	Bolt DIN 933 M6-20 8.8		
14	16512050	1	Oil Cooler,bracket		
15	51083060	2	Clamp "P" 59-63		
16	54082025	5	Clamp DIN 3017 25-40/12 W4		
17	15312007	2	Cover, water cooler D 30		
18	54082050	2	Clamp DIN 3017 50-70/12 W4		
19	14712051	1	Cooler,oil		
20	57000375	4	Washer 17-22-1,5		
21	14712015	2	Bolt,Coupling pipe oil		
22	18011020	1	Pipe		
23	15212022	1	Elbow	15/02/2017	
23	15312009	1	Elbow		14/02/2017
24	18512022	2	Pipe		
NS	M87503040	1	Water Intake Hose (HQ) D. 30-38 [NS]		
NS	24260001	1	Reducing Sleeve 3/8-1/2 [NS]		
NS	24260002	1	Reducing Sleeve 3/8-3/4 [NS]		
NS	24260003	1	Tenon Red. 1/2-3/8 [NS]		
NS	51030008	4	Washer DIN 125-8 [NS]		
NS	52102257	4	Bolt DIN 933 M8-20 8.8 [NS]		
NS	52120008	4	Nut DIN 934 M8 8.8 [NS]		
NS	52301309	2	Bolt DIN 931 W7/16-30 8.8 [NS]		
NS	53033008	4	Washer GROWER DIN 127-8 [NS]		

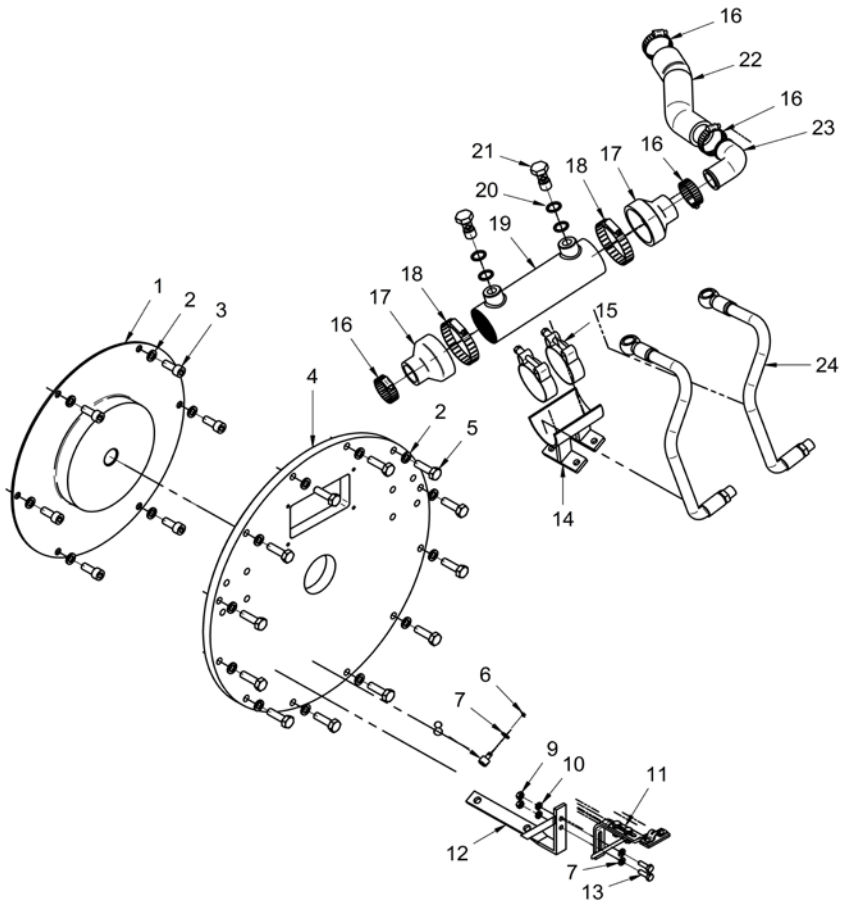

[NS] Not shown

Kit Gearbox

	17510225		Kit GearBox PRM-500		
FIG.	**REF.**	**QTY**	**DESCR.**	**FROM**	**UPTO**
NS	53033011	2	Washer GROWER DIN 127-11 [NS]		
NS	53033012	8	Washer GROWER DIN 127-12 [NS]		
NS	56000083	1	Washer 21-26-1,5 [NS]		
NS	58088281	2	Pastic Cable Zip Tie [NS]		

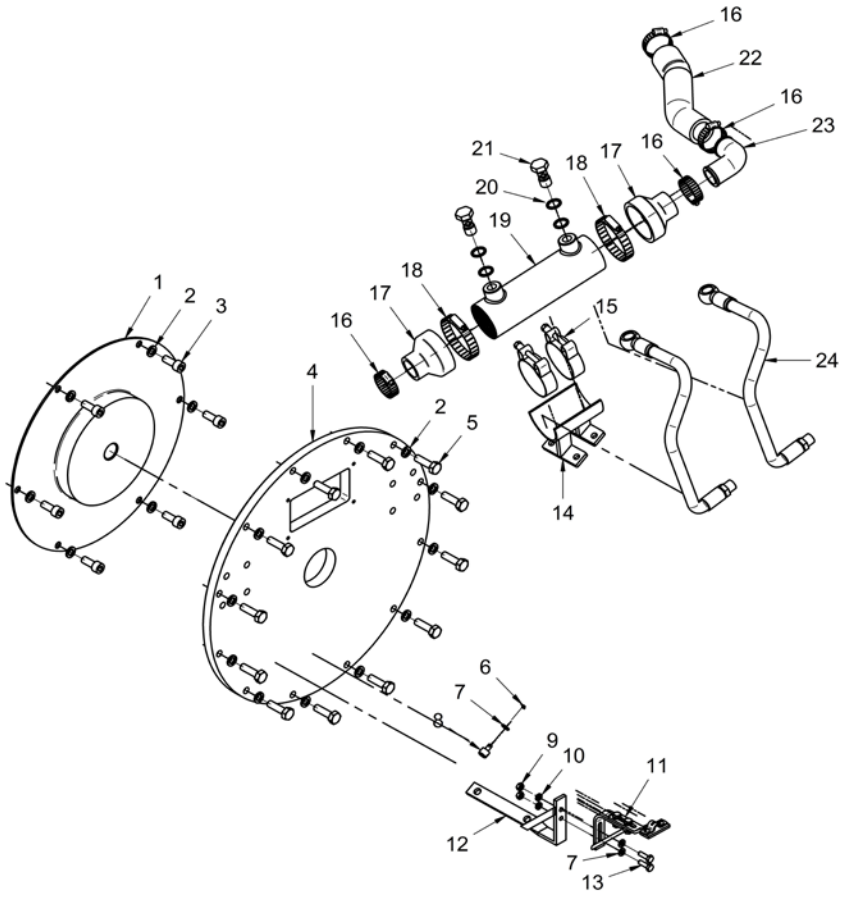

Kit Gearbox

17510244			Kit Bobtail-Keel Cooling		
FIG.	REF.	QTY	DESCR.	FROM	UPTO
1	17420046	1	Cover,Gear Case		
2A	52101266	5	Bolt DIN 931 M8-65 8.8		
2B	53033008	5	Washer GROWER DIN 127-8		
3	18011102	2	Cover,Water Cooler		
4	18011008	2	O-Ring D. 72X3		
5	18013016	1	Exhaust Flange (S)		
6	16513002	1	Exhaust Elbow Gasket		
NS	51030012	1	Washer DIN 125-12 [NS]		
NS	53038008	1	Washer DIN 6798-A 8 [NS]		

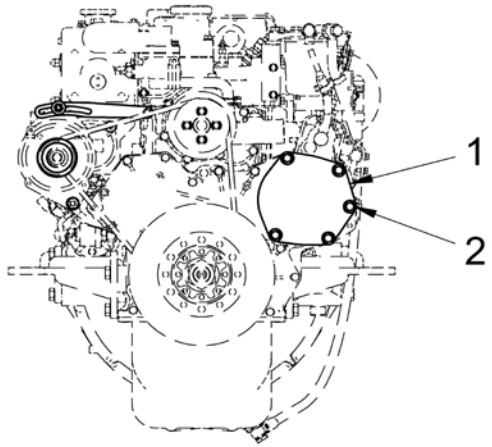

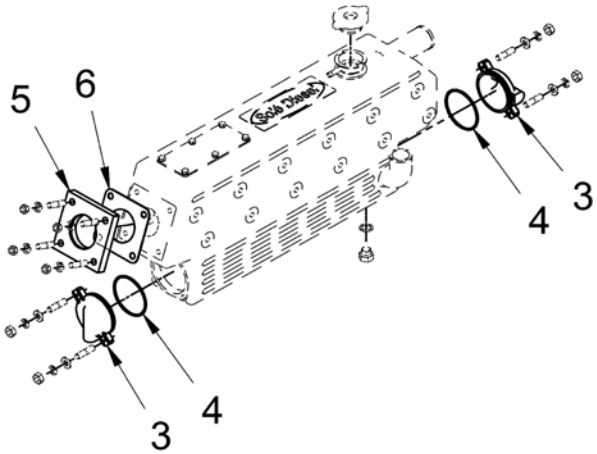

[NS] Not shown

17417100			Kit 2nd Alternator 28V/140A		
FIG.	**REF.**	**QTY**	**DESCR.**	**FROM**	**UPTO**
1	17417101	1	Alternator, Bracket		
2	17110102	1	Pulley 2A (S)		
3	17417102	1	Alternator, Bracket		
4	17417106	1	Alt. 28V 140A Mahle	14/06/2016	
5	53033010	4	Washer GROWER DIN 127-10		
6	52101369	8	Bolt DIN 931 M12-80 8.8		
7	51030010	8	Washer DIN 125-10		
8	52120010	4	Nut DIN 934 M10 8.8		
9	52102310	4	Bolt DIN 933 M10-35 8.8		
10	53033012	3	Washer GROWER DIN 127-12		
12	51030012	3	Washer DIN 125-12		
13	52120012	3	Nut DIN 934 M12 8.8		
14	54102365	2	Bolt DIN 933 M 12-60 INOX		
15	52102360	1	Bolt DIN 933 M12-35 8.8		
16	52120014	2	Nut DIN 934 M14 8.8		
17	17417104	2	Belt Type SPAX 807		

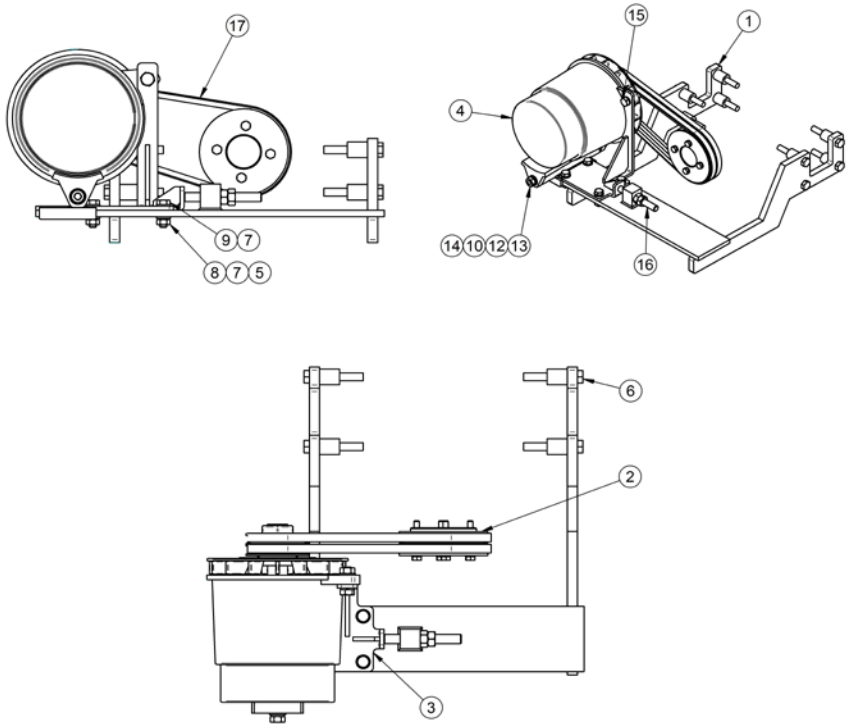

17517093			Kit 2nd Alternator 28V/55A		
FIG.	**REF.**	**QTY**	**DESCR.**	**FROM**	**UPTO**
1	17410001.1	1	Front Bracket		
2	17417027	1	Alt. 28V/55A Mahle	16/03/2016	
3	17417022	1	Pulley		
4	17417092	1	Bracket Alternator		
5	17510106	1	Pulley 4A D195 (S)		
6	17517006	1	Belt Type SPAX 950		
7	51030010	1	Washer DIN 125-10		
8	51030012	1	Washer DIN 125-12		
9	52101376	1	Bolt DIN 931 M12-130 8.8		
10	52102310	1	Bolt DIN 933 M10-35 8.8		
11	52102361	4	Bolt DIN 933 M12-40 8.8		
12	52120010	1	Nut DIN 934 M10 8.8		
13	52120012	1	Nut DIN 934 M12 8.8		
14	53033010	1	Washer GROWER DIN 127-10		
15	53033012	5	Washer GROWER DIN 127-12		

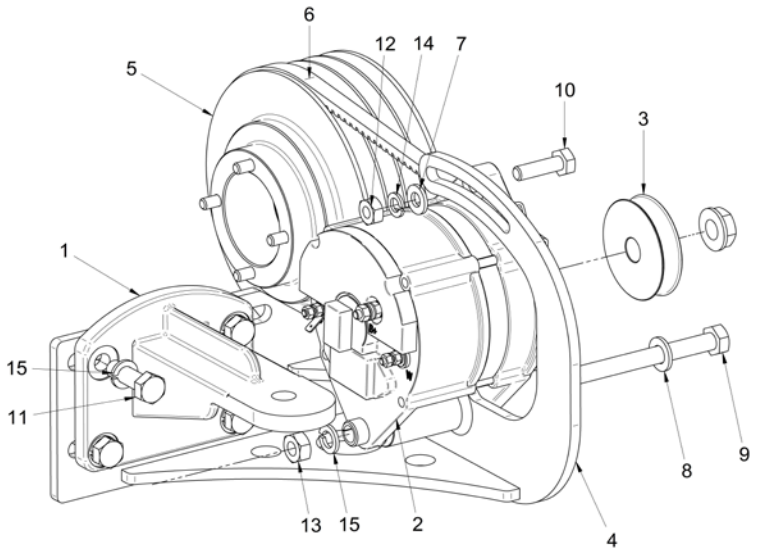

17517095			Kit 2nd Alternator 24V/55A Bipolar		
FIG.	**REF.**	**QTY**	**DESCR.**	**FROM**	**UPTO**
1	17410001.1	1	Front Bracket		
2	17510106	1	Pulley 4A D195 (S)		
3	19517102	1	Belt		
4	17517096	1	SECOND Alternator Bracket		
5	19417011	4	Bushing		
6	17517098	1	Pulley Alternator		
7	19427032	1	Alt. 28V/55A Mahle		
8	51030008	4	Washer DIN 125-8		
9	52101269	2	Bolt DIN 931 M8-80 8.8		
10	52102361	4	Bolt DIN 933 M12-40 8.8		
11	52120008	2	Nut DIN 934 M8 8.8		
12	53033008	2	Washer GROWER DIN 127-8		
13	53033012	4	Washer GROWER DIN 127-12		

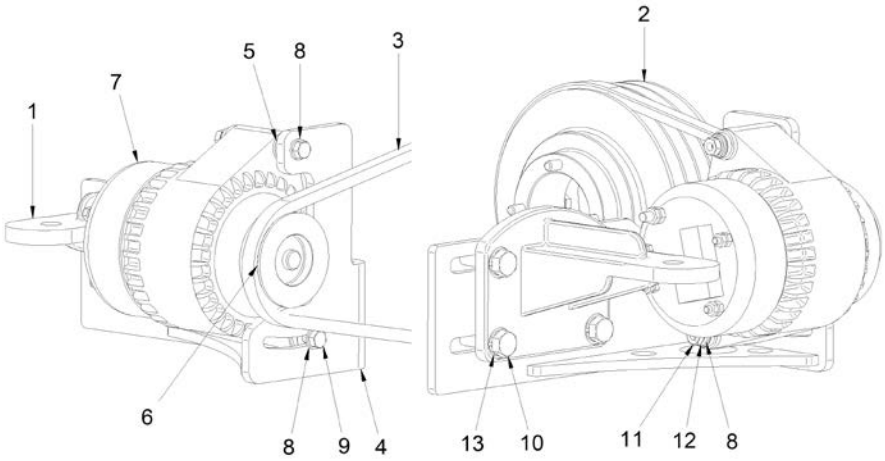

	17517200		Kit Wire Earth Isolated 12V		
FIG.	REF.	QTY	DESCR.	FROM	UPTO
1	60900999.1	2	Connection M14X1,5 5/8" EXA.19 L=25		
2	56000073	2	Copper Washer 16-23-1,5		
3	56000069	2	Washer 14-20-1,5		
4	60900972	1	High Coolant, 2 Poles		
5	60900982	1	Temperature SENDER		
6	17427007.1	1	Plate,Adjusting		
7	17117012	2	Bushing		
8	52101326	1	Bolt DIN 931 M10-130 8.8		
9	17425268.1	3	Nut		
9	17427002.1	1	Bracket, Alternator		
10	17117011	2	Bushing		
11	60900978	1	Switch, Oil Press		
12	60900987	1	Sender, Oil Press.		
13	19017104	1	Relay 12 V. Bipolar		06/06/2016
13	19017113	1	Relay 12 V, Earth Isolated	06/06/2016	
14	51030006	4	Washer DIN 125-6		
15	52102154	2	Bolt DIN 933 M6-10 8.8		
16	17417107	1	Support Relay,Plate		
17	51030008	4	Washer DIN 125-8		
18	52102258	4	Bolt DIN 933 M8-25 8.8		
19	51030005	4	Washer DIN 125-5		
20	52102104	1	Bolt DIN 933 M5-10 8.8		
21	17417013	1	Bushing		
22	17417014	1	Washer		
24	17417016	3	Washer		
25	17417015	6	DOUILLE		
26	17425264.1	1	Stop SOLENOID		
27	17519001.1	1	Bracket, Engine Control		
28	13019001	2	Clamp		
29	15119015	2	CABLE Holder Ball		
30	52120006	2	Nut DIN 934 M6 8.8		
31	53033006	2	Washer GROWER DIN 127-6		
32	14419023	2	Ball JOINT		
33	52102155	2	Bolt DIN 933 M6-12 8.8		
NS	13817011	1	Bracket [NS]		

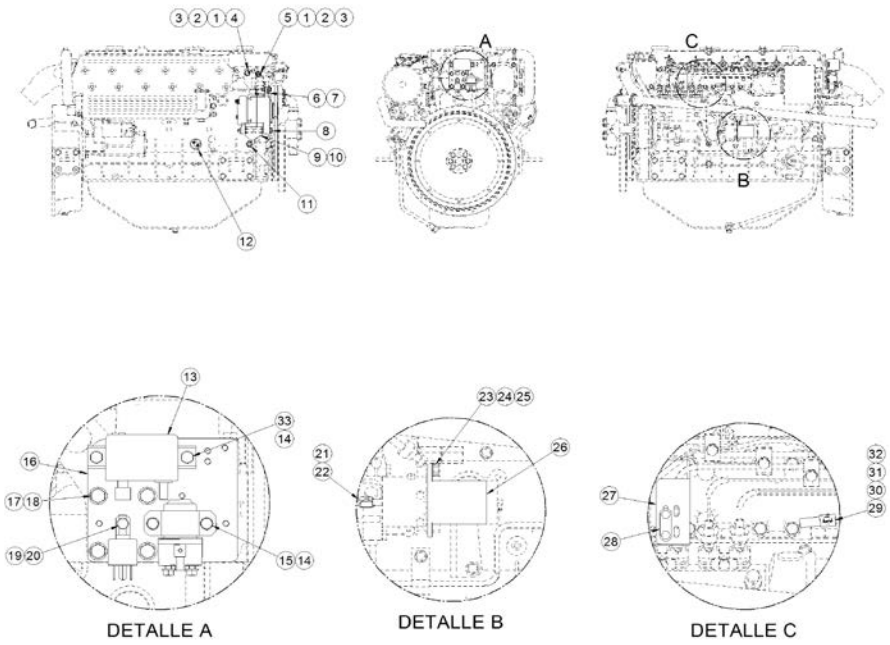

[NS] Not shown

17517200			Kit Wire Earth Isolated 12V		
FIG.	REF.	QTY	DESCR.	FROM	UPTO
NS	17117052	1	Oil Pressure Sensor Adaptor [NS]	29/09/2015	
NS	51030010	2	Washer DIN 125-10 [NS]		
NS	52120010	1	Nut DIN 934 M10 8.8 [NS]		
NS	53033010	1	Washer GROWER DIN 127-10 [NS]		
NS	60900152	1	Wire [NS]		
NS	60900157	1	Wire [NS]		
NS	60975048	1	MASS BLACK TO Wiring START [NS]		
NS	60975202R.2	1	SM-105 Electrical Wiring EARTH ISOLATED [NS]		13/04/2016
NS	60975203	1	Wiring Electrical Isolated SM-105 SVT [NS]	13/04/2016	

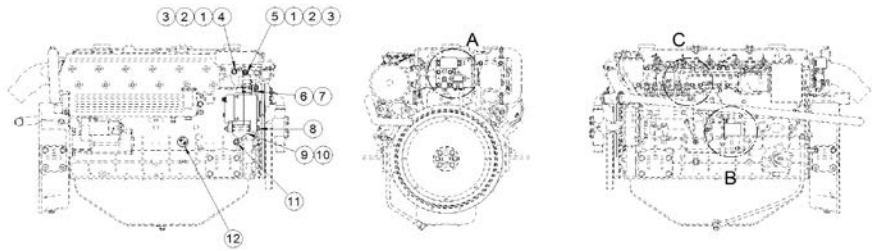

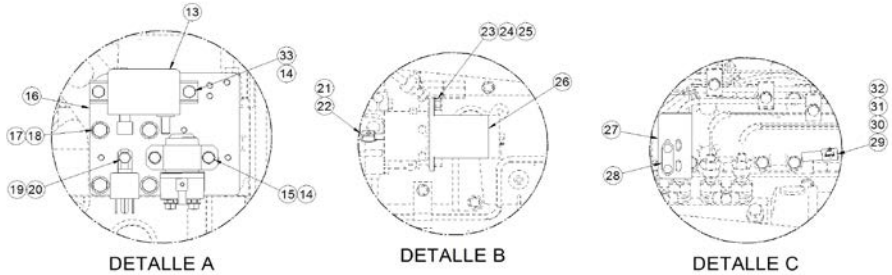

Electrical System

17517211			Kit 24V Engine Electrical System		
FIG.	REF.	QTY	DESCR.	FROM	UPTO
	17117022	1	Pulley Alternator, Type A		09/06/2016
	17417005	1	Relay 24V 24-100		
	17417005.1	1	Relay 24V 24-22A		
	17417024	1	Alternator 28V/55A		
	17525264.2	1	Stop SOLENOID 24V		
	17527001.2	1	Starter Assy 24V		
	17527017.2	6	Glow Plug 24V		
	17617006	1	Spacer 6,5X12X5		
	51030005	1	Washer DIN 125-5		
	51030006	2	Washer DIN 125-6		
	51031008	1	Washer DIN 9021 8		
	52102104	1	Bolt DIN 933 M5-10 8.8		
	52102156	1	Bolt DIN 933 M6-16 8.8		
	52102260	1	Bolt DIN 933 M8-35 8.8		
	60975130	1	SVT 30 MINI-74/SM-105/103 24V Panel		

IMAGEN DISPONIBLE PRÓXIMAMENTE
IMAGE AVAILABLE COMING SOON

Other Kits

13812010			Pression Gauge Kit		
FIG.	**REF.**	**QTY**	**DESCR.**	**FROM**	**UPTO**
1	13812013.1	1	Pressure Tap		
2	13812011	1	Flexible Hose F-M G1/4-M16x2		
3	13812012	1	Presion Gauge 0-10 bar		
4	13812014	1	Protective Rubber		

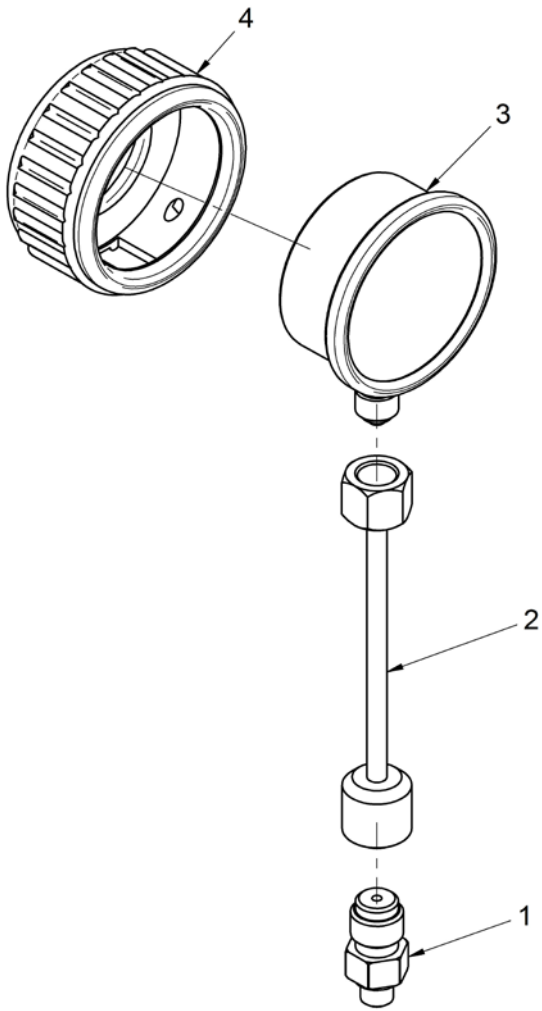

Other Kits

17012093			Kit Trolling Valve for TM-93		
FIG.	REF.	QTY	DESCR.	FROM	UPTO
1	24810050	1	Trolling Valve TM-93		
2	24810913	1	Clamp,CABLE		
3	51030005	2	Washer DIN 125-5		
4	57000375	6	Washer 17-22-1,5		
5	14712015	3	Bolt,Coupling pipe oil		
6	14719115	2	Coupling,cable		
7	51030006	4	Washer DIN 125-6		
8	51051107	2	Pin DIN-94 1,6-16		
NS	17112024	2	Pipe, rev.oil Cooler [NS]		

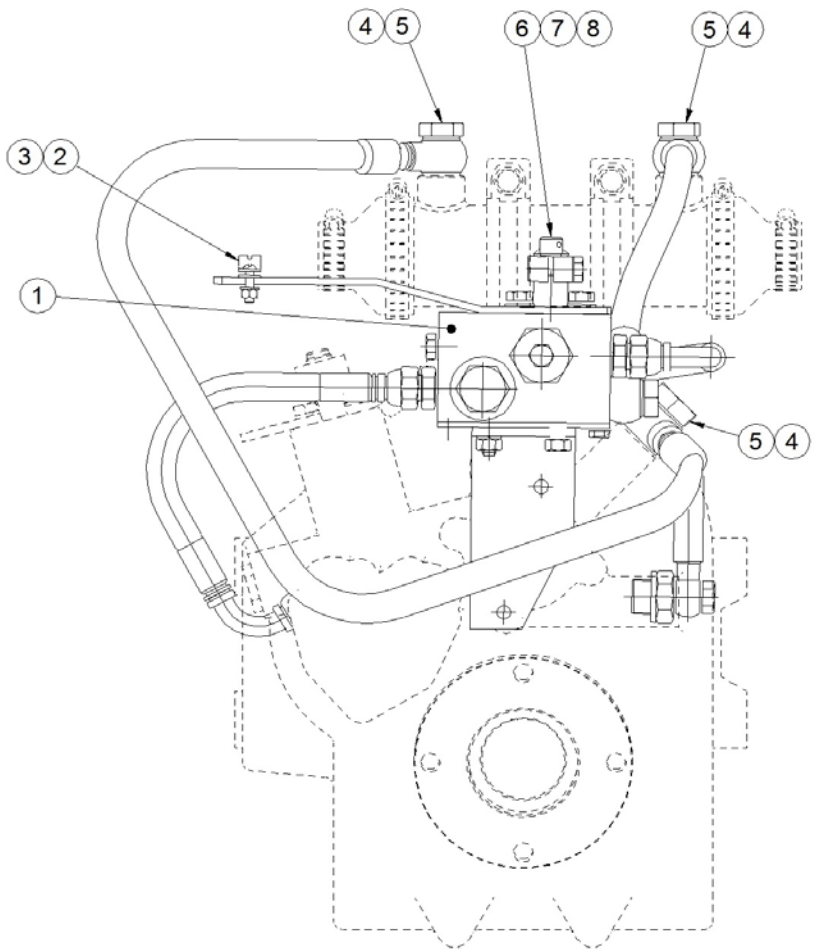

[NS] Not shown

Other Kits

	17211150		Boiler Kit (S)		
FIG.	**REF.**	**QTY**	**DESCR.**	**FROM**	**UPTO**
1	17124053	2	Joint		

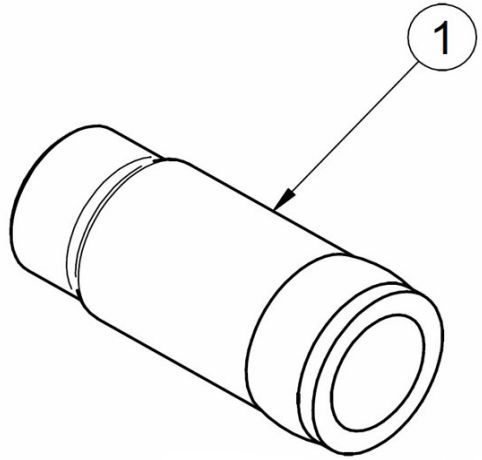

Other Kits

17411020			Kit Hose Extension, Sea Water		
FIG.	REF.	QTY	DESCR.	FROM	UPTO
1	17411021	1	Pipe, Sea water		
2	M87503040	0	Water Intake Hose (HQ) D. 30-38 [VAR]		
3	54082032	2	Clamp DIN 3017 32-50/12 W4		

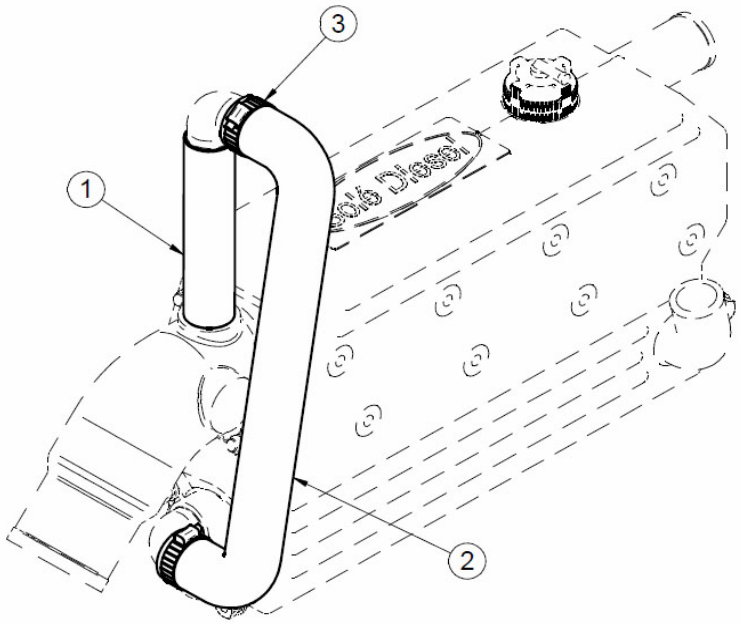

[VAR] Variable according to repair

Other Kits

17414000			Kit 2nd Fuel Filter (S)		
FIG.	REF.	QTY	DESCR.	FROM	UPTO
1	17414003	1	Bracket 2nd Filter		
2	17414002	1	Bracket		
3	19424022	2	Gas-Oil Filter Element		
4	16514022	2	Coupling,screw		
5	57000378	4	Washer 18-24-1,5		
6	51030010	2	Washer DIN 125-10		
7	53033010	2	Washer GROWER DIN 127-10		
8	52120010	2	Nut DIN 934 M10 8.8		
9	52101311	2	Bolt DIN 931 M10-40 8.8		
10	52101260	2	Bolt DIN 931 M8-35 8.8		
11	18617012	2	Spacer 10,5X24X15	03/10/2015	
12	53033008	2	Washer GROWER DIN 127-8		
13	17414005	1	2nd Filter Pipe		
14	17414004	1	2nd Filter Pipe		
NS	17414006	1	Joint [NS]		
NS	58088284	3	Pastic Cable Zip Tie [NS]		

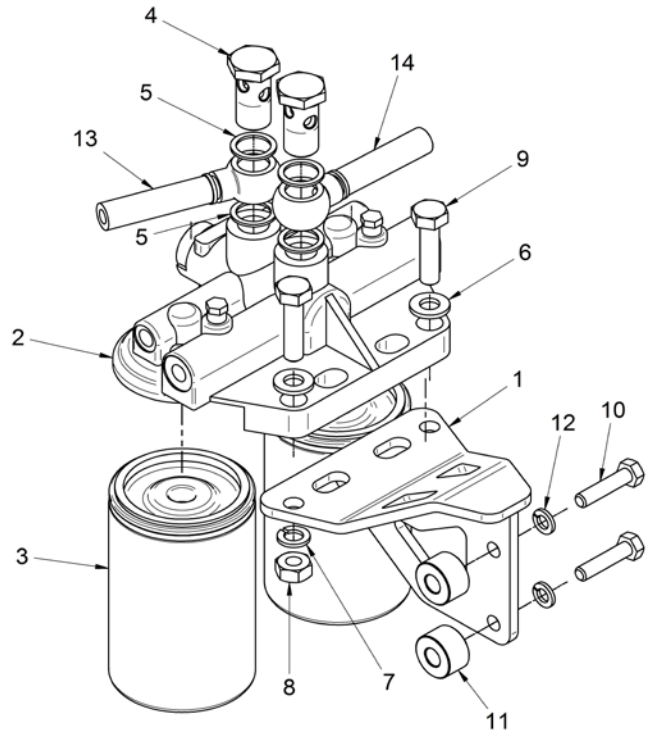

[NS] Not shown

Other Kits

17524100R			Kit Double Jacketed Fuel Injection Pipes		
FIG.	REF.	QTY	DESCR.	FROM	UPTO
1	17524010R	1	Pipes Kit [NP]		
2	17514018	1	Assy,Fuel Return [NP]		
3	56000057	12	Washer 8-13-1,5 [NP]		
4	13114007	6	Screw SHORT Connector [NP]		

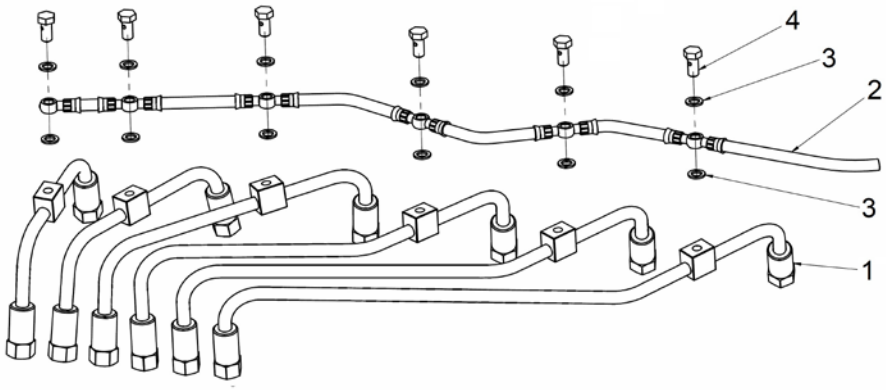

[NP] Not provided

Other Kits

19012170			Kit Trolling Valve for TM-170		
FIG.	REF.	QTY	DESCR.	FROM	UPTO
1	24820050	1	Trolling Valve TM-170		
2	24810913	1	Clamp,CABLE		
3	51030005	2	Washer DIN 125-5		
4	57000375	4	Washer 17-22-1,5		
5	14712015	2	Bolt,Coupling pipe oil		
6	14719115	2	Coupling,cable		
7	51030006	4	Washer DIN 125-6		
8	51051107	2	Pin DIN-94 1,6-16		
9	17112024	2	Pipe, rev.oil Cooler		

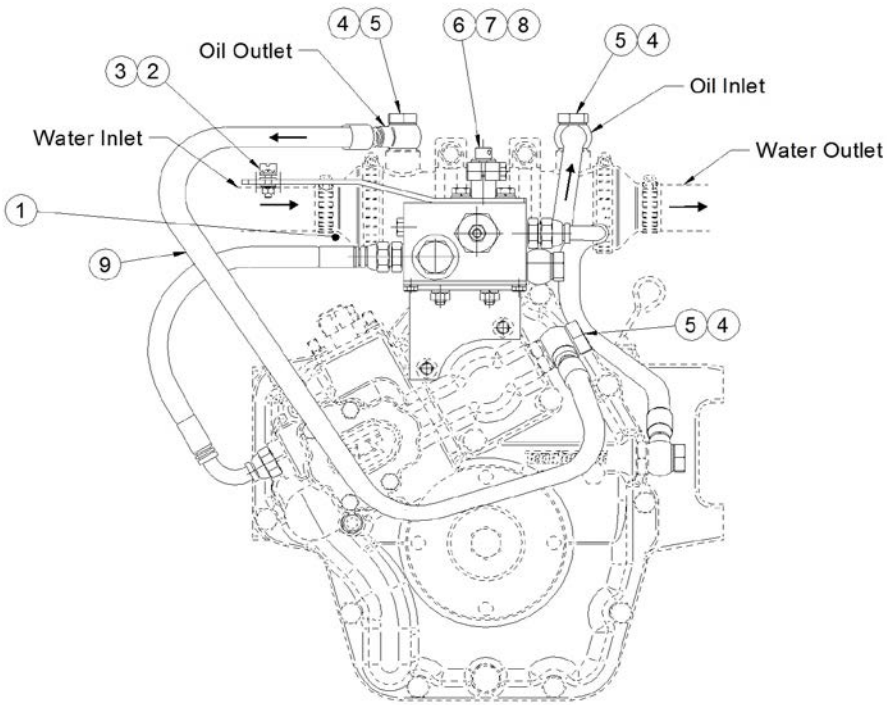

Other Kits

19112265			Kit Trolling Valve for TM-265		
FIG.	**REF.**	**QTY**	**DESCR.**	**FROM**	**UPTO**
1	24840050	1	Trolling Valve TM-265		
2	24810913	1	Clamp,CABLE		
3	51030005	2	Washer DIN 125-5		
4	57000375	4	Washer 17-22-1,5		
5	14712015	2	Bolt,Coupling pipe oil		
6	14719115	2	Coupling,cable		
7	51030006	2	Washer DIN 125-6		
8	51051107	2	Pin DIN-94 1,6-16		
9	19412018	1	Pipe, rev.oil Cooler		
10	17112024	1	Pipe, rev.oil Cooler		

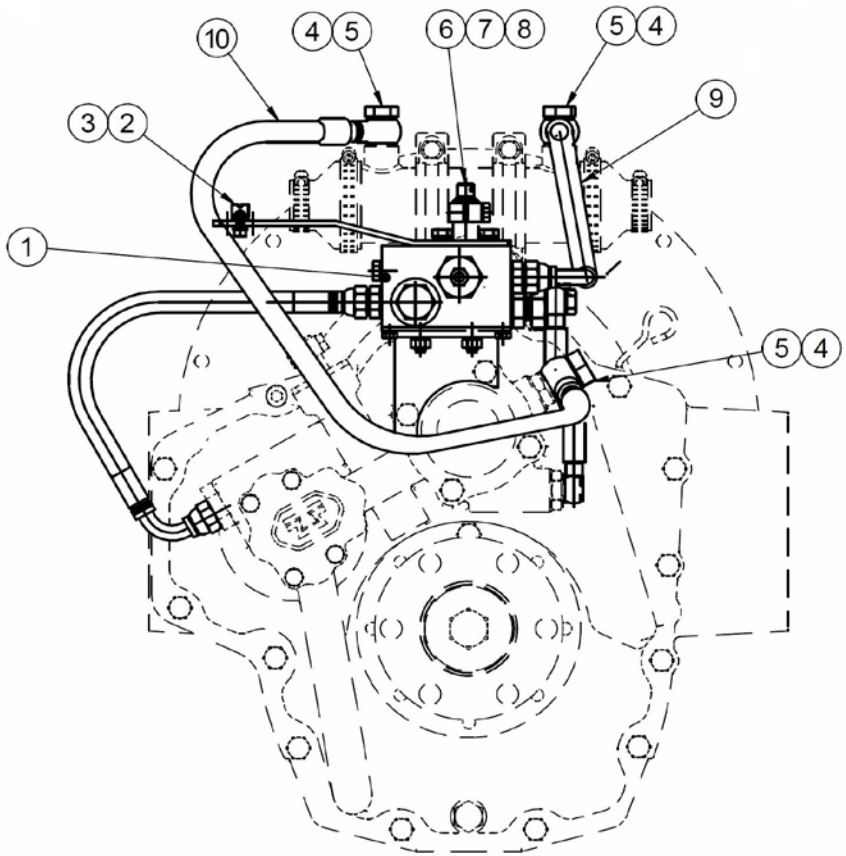

Exhaust System

17413118			Kit Dry Exh. Flexible Pipe & Silencer(S)		
FIG.	REF.	QTY	DESCR.	FROM	UPTO
1	18013115	1	Kit Dry Exhaust With Flexible Pipe (S)		
2	19013020	1	Gasket		
3	17413018	1	Exhaust Muffler		
4	52101463	4	Bolt DIN 931 M16-50 8.8		
5	53033016C	4	Washer	10/12/2009	
6	52120016	4	Nut DIN 934 M16 8.8		
7	51030016	4	Washer DIN 125-16		
8	17413019	1	RAINCover		

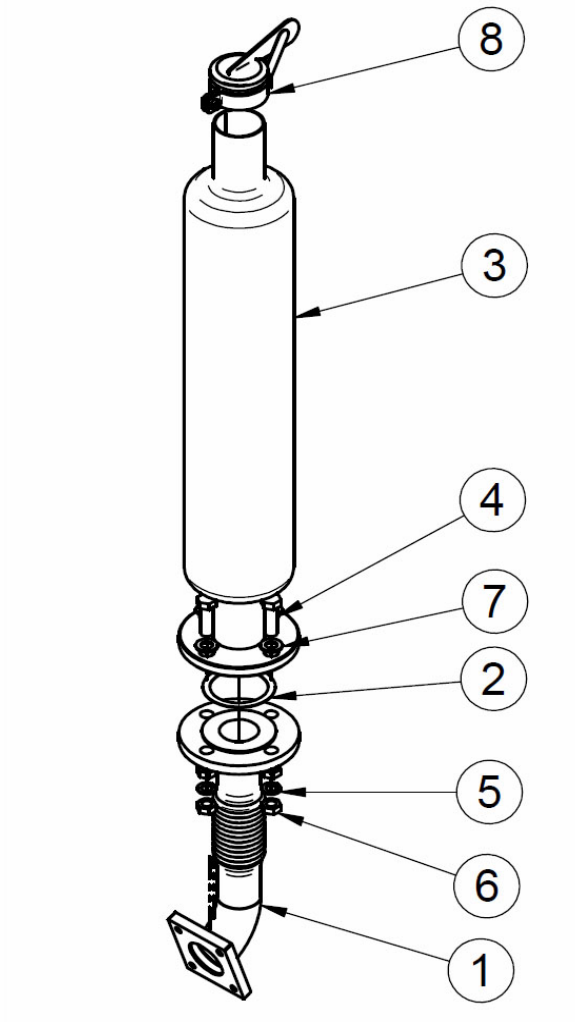

Exhaust System

	18013016		Exhaust Flange (S)		
FIG.	**REF.**	**QTY**	**DESCR.**	**FROM**	**UPTO**
1	18013016.1	1	Exhaust Flange		

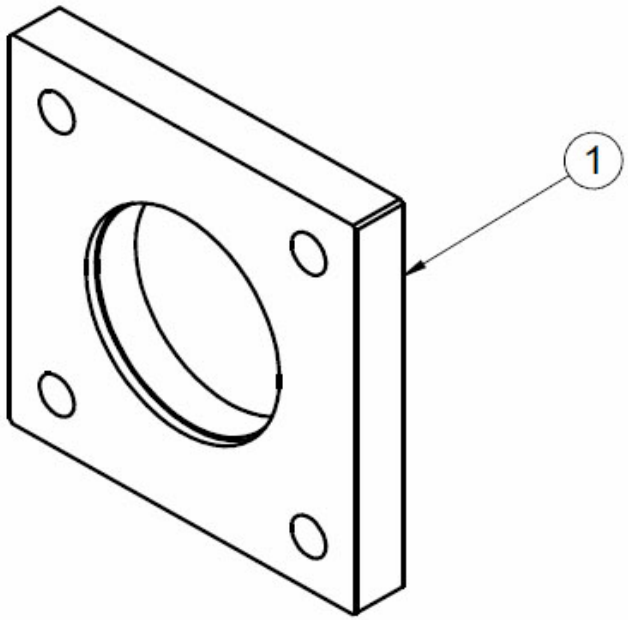

Exhaust System

18013115			Kit Dry Exhaust With Flexible Pipe (S)		
FIG.	REF.	QTY	DESCR.	FROM	UPTO
1	51068060	1	Flange		
2	19013017	1	Expansion,compensator		
3	51066060	1	KNEE 90 FIG. 6002/5 2"		
4	18013016.1	1	Exhaust Flange		

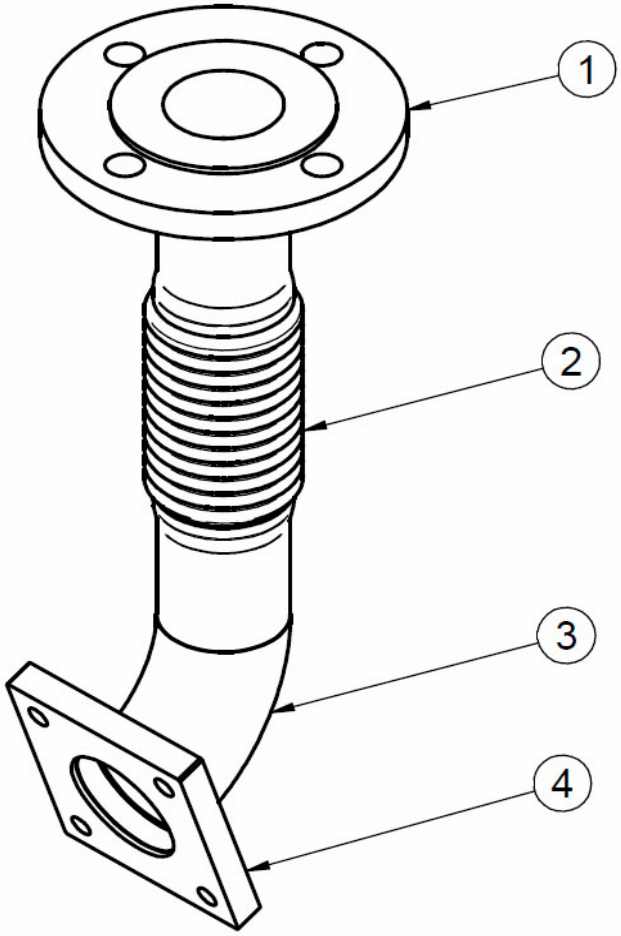

Power Take-off Pulley

	17510104		Pulley 4B (S)		
FIG.	**REF.**	**QTY**	**DESCR.**	**FROM**	**UPTO**
1	17510104.1	1	Pulley 4B		
2	53038008	4	Washer DIN 6798-A 8		
3	52101264	4	Bolt DIN 931 M8-55 8.8		

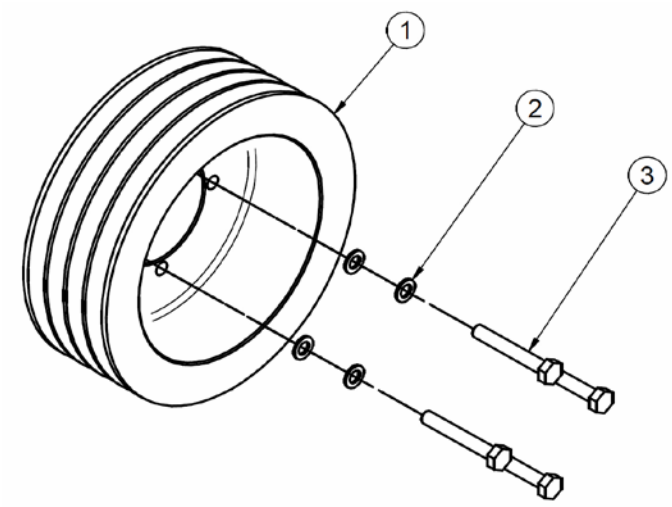

Power Take-off Pulley

	17510106		Pulley 4A D195 (S)		
FIG.	**REF.**	**QTY**	**DESCR.**	**FROM**	**UPTO**
1	17510106.1	1	Pulley 4A		
2	53038008	4	Washer DIN 6798-A 8		
3	52101264	4	Bolt DIN 931 M8-55 8.8		

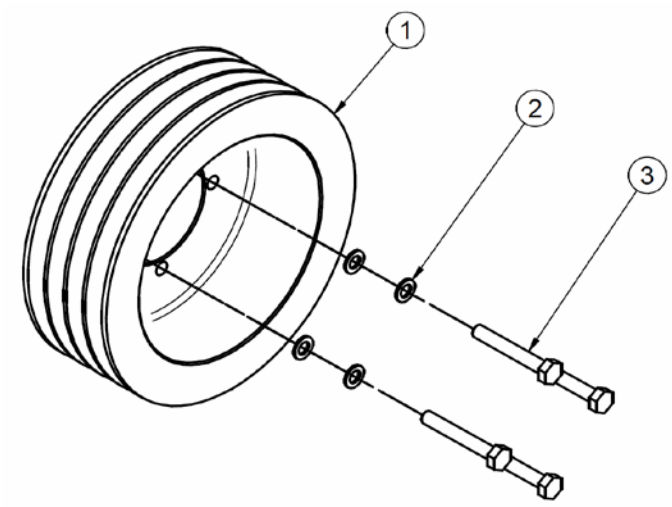

Power Take-off Pulley

	17510125		Kit Power Take-off D40 (S)		
FIG.	**REF.**	**QTY**	**DESCR.**	**FROM**	**UPTO**
1	17510125.1	1	Shaft		
2	53033008	4	Washer GROWER DIN 127-8		
3	52101262	4	Bolt DIN 931 M8-45 8.8		
4	60500064	1	BUTT Washer		
5	53033010	1	Washer GROWER DIN 127-10		
6	52102309	1	Bolt DIN 933 M10-30 8.8		
7	40040086	1	Flange Ø 40 Shaft Key		

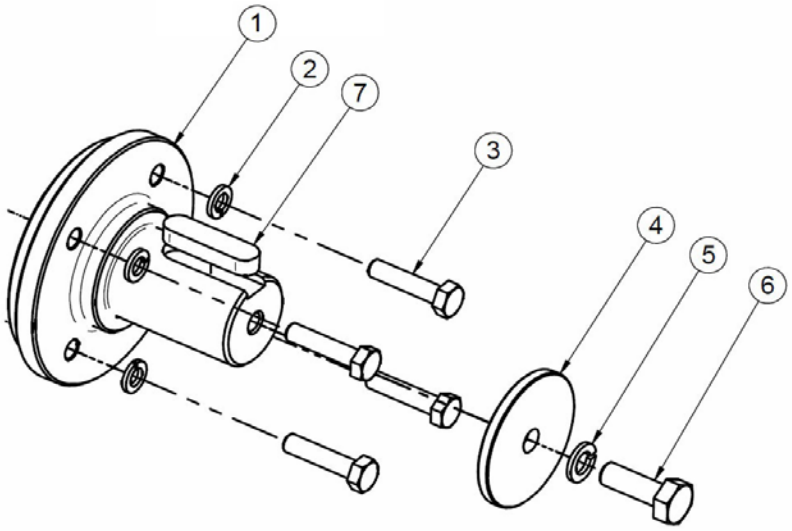

Power Take-off Pulley

	17510126		Kit Power Take-off D50		
FIG.	**REF.**	**QTY**	**DESCR.**	**FROM**	**UPTO**
1	17510126.1	1	PTO Shaft		
2	53033008	4	Washer GROWER DIN 127-8		
3	52101262	4	Bolt DIN 931 M8-45 8.8		
4	17510127	1	Washer		
5	53033014	1	Washer GROWER DIN 127-14		
6	52102411	1	Bolt DIN 933 M14-40 8.8		
7	40045012	1	KEY		

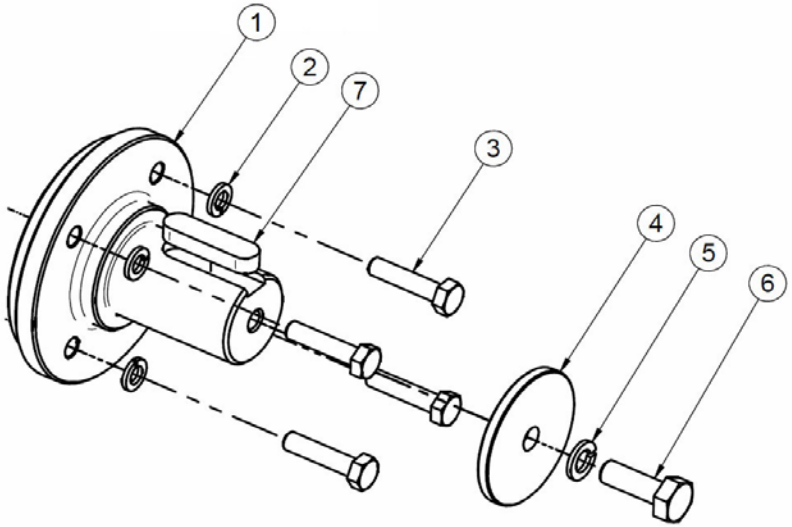

Kit Keel Cooling

17511200			Kit Keel Cooling & Dry Exhaust Hydr.Gear		
FIG.	REF.	QTY	DESCR.	FROM	UPTO
1	17420046	1	Cover,Gear Case		
2A	52101266	5	Bolt DIN 931 M8-65 8.8		
2B	53033008	5	Washer GROWER DIN 127-8		
3	17511015	1	Pipe		
4	54082025	3	Clamp DIN 3017 25-40/12 W4		
5	19411045	1	Pipe 42-54-90		
6	54082032	2	Clamp DIN 3017 32-50/12 W4		
7	18011102	1	Cover,Water Cooler		
8	18011008	2	O-Ring D. 72X3		
9	18013016	1	Exhaust Flange (S)		
10	16513002	1	Exhaust Elbow Gasket		
11	15217010	1	Bracket,wirings		
12	59071452	2	Clamp 1 42/15 W1		
13	51030006	2	Washer DIN 125-6		
14	52102106	1	Bolt DIN 933 M5-15 8.8		
15	52102156	1	Bolt DIN 933 M6-16 8.8		
16	18011103	1	Cover,Water Cooler		
17	13311005	1	Plug		
NS	M87503242	1	Water Intake Hose (HQ) D. 32-42 [NS]		
NS	51030005	1	Washer DIN 125-5 [NS]		
NS	51031006	1	Washer DIN 9021 6 [NS]		
NS	52102257	1	Bolt DIN 933 M8-20 8.8 [NS]		
NS	52120006	1	Nut DIN 934 M6 8.8 [NS]		
NS	53033012	1	Washer GROWER DIN 127-12 [NS]		
NS	53038010	1	Washer DIN 6798-A 10 [NS]		

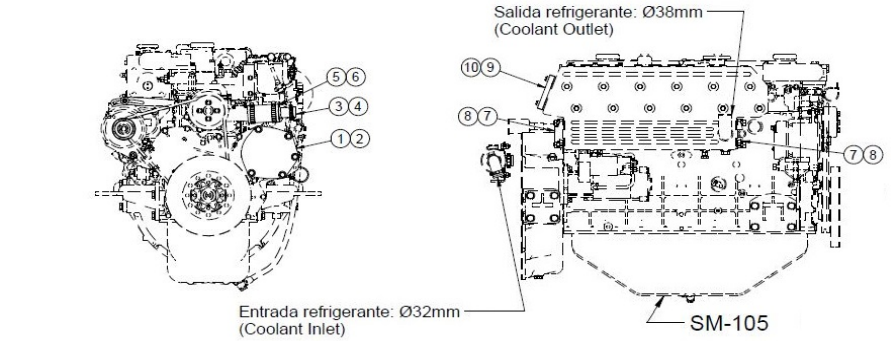

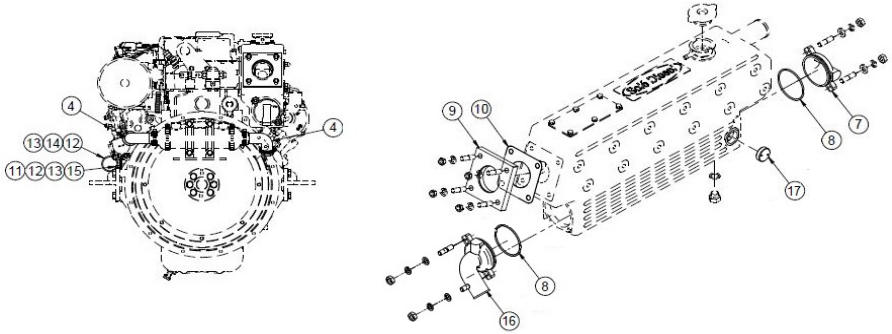

[NS] Not shown

Kit Instrument Panel SVT

	60974135		Kit 2nd Panel SVT 40 MINI-74/SM-105 12V		
FIG.	**REF.**	**QTY**	**DESCR.**	**FROM**	**UPTO**
1	60974130	1	SVT 30 MINI-74/SM-105/103 Panel		
2	60974132	1	SVT 40 MINI-74/SM-105 Panel		
3	60900210.2	1	T Double Panel DERIVATION		

Kit Instrument Panel SVT

60975134			Kit 2nd Panel SVT 40 MINI-74/105 24V		
FIG.	**REF.**	**QTY**	**DESCR.**	**FROM**	**UPTO**
1	60975130	1	SVT 30 MINI-74/SM-105/103 24V Panel		
2	60975133	1	SVT 40 MINI-74/SM-105 24V Panel		
3	60900210.2	1	T Double Panel DERIVATION		

Kits NMEA 2000 - one engine

61474100			Kit SDC 2000 MINI-74/105 12V		
FIG.	**REF.**	**QTY**	**DESCR.**	**FROM**	**UPTO**
1	61400200	1	Kit SDC 2000 24V Standard		
2	60900091	2	MICRO Relay 12V 12-20		

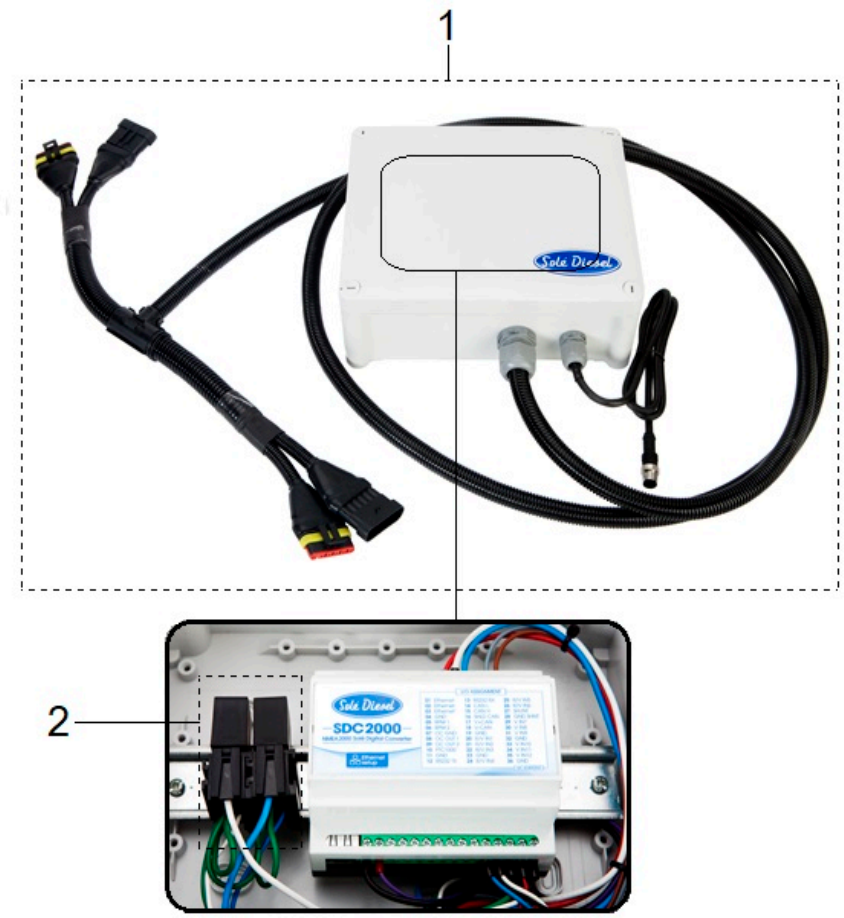

[NS] Not shown

Kits NMEA 2000 - one engine

61474200			Kit SDC 2000 MINI-74/105 24V		
FIG.	REF.	QTY	DESCR.	FROM	UPTO
1	61400200	1	Kit SDC 2000 24V Standard		
2	60900092	2	MICRO Relay 24V 24-10		

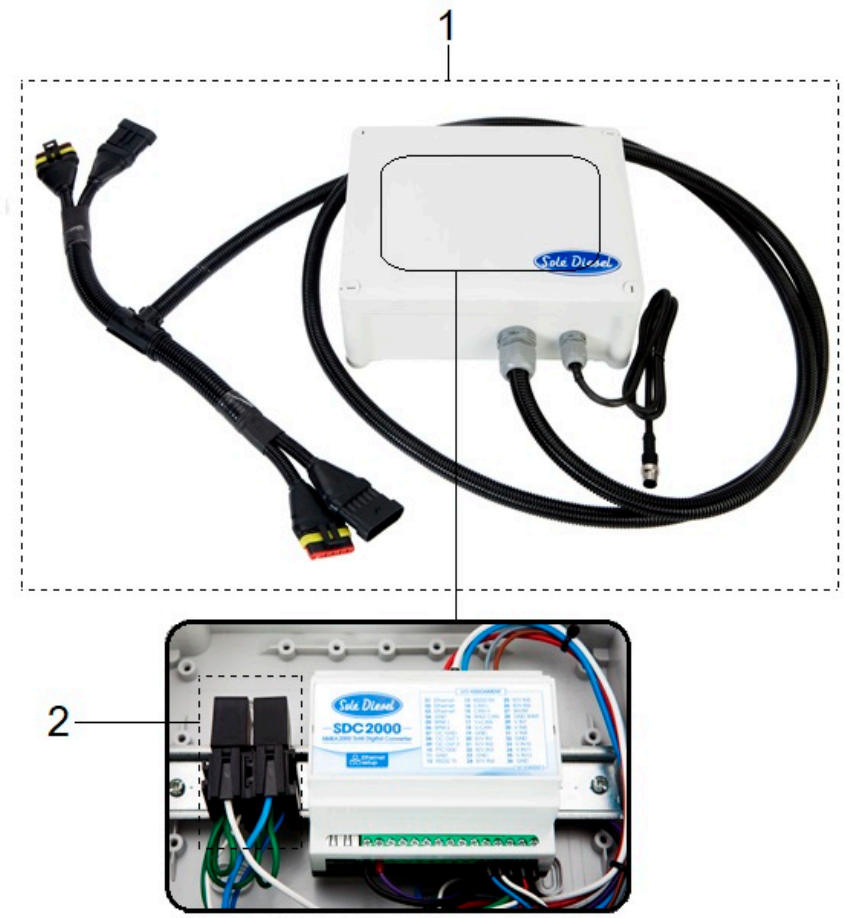

[NS] Not shown