Solé Diesel

Engine SM-94

VERSION 2018-1

SPARE PARTS MANUAL

PARTS LIST CATALOGUE

NORMS TO PLACE AN ORDER:

For fast and more efficient service, please specify the following information on spare parts orders that must be preferably done by FAX or e-mail as specified below:

1- Engine model: As shown in identification plate

2- Engine serial number: As shown in identification plate and stamped on crankcase

3- Item description + part number + quantity required

Spare parts requests must be adressed to:

recambios@solediesel.com

Telf.: +34 93 775 44 05

Fax: +34 93 775 30 13

The components shown in the catalog have:

- Figure: Number by which they are represented in scheme
- Description: Trade name of the component
- Quantity: Total number of parts used in the assembly of the part represented (may differ from the total minimum quantities)

Hoses, indicates the total length in meters

The diagrams shown in this catalog of spare parts, have only the purpose to identify the piece in question, its representation is not meaningful and may differ from the actual piece.

In case of doubt, contact Solé Diesel, or your authorized dealer.

The parts i / or references in this catalog are subject to change without notice.

SOLÉ, S.A.

C-243b, Km, 2 - P.O. BOX 15

08760 Martorell (Barcelona) Spain

Download the latest version of this manual HERE

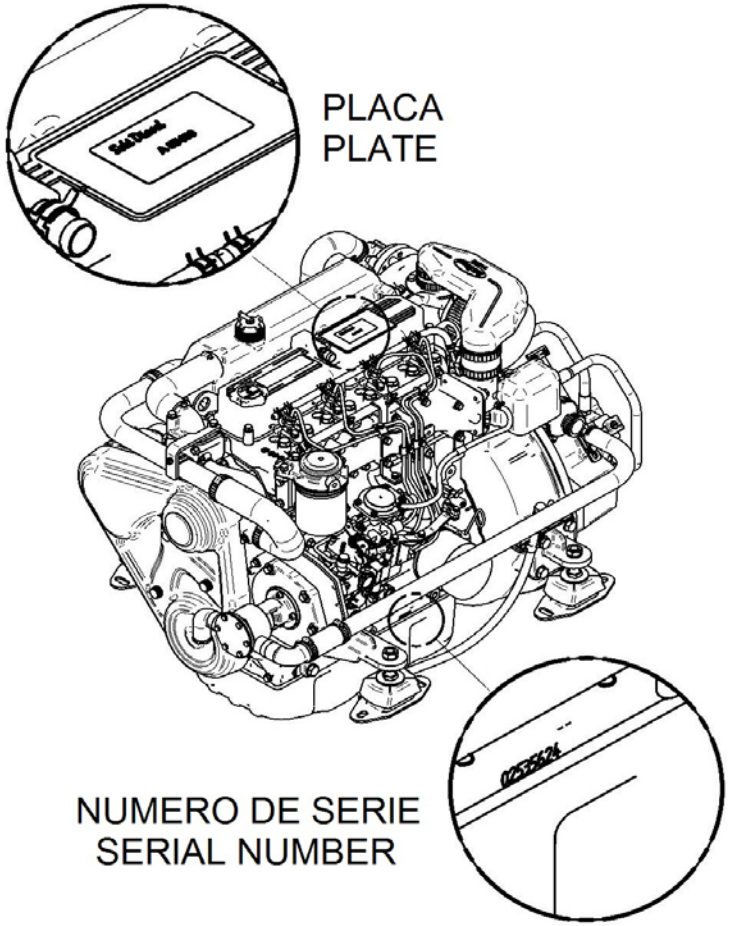

Contents

Engine Body
Cylinder Head
Rocker Cover & Breather
Valve Drive
Timing Parts
Gear Case
Cranckcase
Rear Plate
Piston & Connectiong Rod
Crankshaft & Flywheel
Oil System
Oil Pan
Engine Brackets
Bracket, Engine Control
Oil cooler
Belt Protection

Inlet & Exhaust
Inlet
Turbocharger
Spare parts, Turbocharger

Cooling System
Water Pump
Cooler Pipes
Water Cooler Assy SM-82/94
1" Water Pump, Set
Wet Exhaust

Fuel System
Fuel Pipe
Injection Nozzle
Fuel Supply Parts

12V Electrical System
Kit Alternador 14V/95A
Electrical Wiring
SVT 30 SM-82/94 Panel

Maintenance Kit
Gasket Kit
Pipe Rubber Set,Water Line SM-82/SM-94
Gasket Kit

Gearbox TM-93
Sheet 1.1/4
Sheet 1.2/4
Sheet 1.3/4
Intermediate Shaft 2/4
Input Shaft 3/4
Output Shaft 4/4
Maintenance Kit

Gearbox TM-93A
Sheet 1.1/4
Sheet 1.2/4
Sheet 1.3/4
Intermediate Shaft 2/4
Input Shaft 3/4
Output Shaft 4/4
Maintenance Kit

Gearbox TM-170
Sheet 1.1/4
Sheet 1.2/4
Sheet 1.3/4
Input Shaft 2/4
Intermediate Shaft 3/4
Output Shaft 4/4
Maintenance Kit

TM-345 Gearbox
Sheet 1/4
Sheet 2/4
Sheet 3/4
Sheet 4/4
Maintenance Kit

TM-345A Gearbox
Sheet 1/4
Sheet 2/4
Sheet 3/4
Sheet 4/4
Maintenance Kit

GearBox ZF-63 IV
Sheet 1/2
Sheet 2/2
Mechanical Selector Valve
Electric Selector Valve 12V/24V
Electric Selector Valve 12V/24V (TV)

Gearbox TM-485A1
Sheet 1/4
Sheet 2/4
Sheet 3/4
Sheet 4/4
Maintenance Kit

Gearbox TMC-260
Sheet 1/3
Sheet 2/3
Cooling System 3/3
Maintenance Kit

Gearbox TM-880A
Sheet 1.1/4
Sheet 1.2/4
Sheet 1.3/4
Input Shaft 2/4
Intermediate Shaft 3/4
Output Shaft 4/4
Maintenance Kit

Kit Gearbox
Kit Z-Drive VOLVO 280/290 Z=26
Kit Z-Drive Volvo 280/290 Z=10
Kit GearBox TM-93
Kit GearBox TM-345/A
Kit GearBox TM-170/A/880A
Kit GearBox BORG WARNER With Oil Cooler
Kit GearBox BW (Without Oil Cooler)
Kit GearBox ZF-63IV
Kit SAE 7
Kit GearBox TM-485A1
Kit GearBox PRM-500
Kit Bobtail

Electrical System
Kit 2nd Alternator 28V/55A
Kit 2nd Alternator 14V/95A
Kit 2nd Alternator 28V/140A
Kit Wire Earth Isolated 12V SM-82/94

Other Kits
Pressure Gauge Kit 10 BAR
Kit Trolling Valve for TM-93/A
Kit Trolling Valve for TM-345/A
Boiler Kit (S)
Kit Trolling Valve for TM-485A1
Kit Trolling Valve for TM-170/A

Exhaust System
Exhaust Flange (S)
Kit Dry Exhaust With Flexible Pipe (S)
Kit Dry Exh. Flexible Pipe & Silencer(S)

Power Take-off Pulley
Pulley 2B (S)
Pulley 2A (S)
Pulley 4A D138 (S)
Kit Power Take-off D40 (S)
Kit Pulley & Power Take-off 2A
Kit Pulley & Power Take-off 2B
Pulley 4B (S)
Pulley 4A D195 (S)

Kit Keel Cooling
Kit Keel Cooling & Dry Exh.- TM GearBox

Kit Instrument Panel SVT
SVT 30 Panel 12V + Exh. Temp. Alarm Kit
SVT 30 24V Panel + Exh. Temp. Alarm Kit
Kit 2nd Panel SVT 40 SM-82/94 12V

Kits NMEA 2000 - one engine
Kit SDC 2000 SM-82/94 12V
Kit SDC 2000 SM-82/94 24V

Engine Body

D_MIF1_1_1			Cylinder Head		
FIG.	REF.	QTY	DESCR.	FROM	UPTO
1	17921001	1	Head Assy, Cylinder		
2	(*)	1	Not available [NP]		
2A	17220006	12	Cap, SealING		
2B	13220012	7	Cap Sealing		
2C	17121002	8	Guide,Valve [NP]		
2D	17421061	4	Seat,Valve,IN		
2E	17421062	4	Seat,Valve,Exhaust		
2F	17820011	4	Plug, Tapered [NP]		
3	17421046G.3	1	Plug		
4	17921013	4	Cap,Sealing		
5	17421005	17	Bolt,cylinder head		
6	17821004	1	Gasket,Cylinder Head		
7	17420014	1	EYE,LIFTING,Front		
8	17421018	1	EYE,LIFTING,Head REA		
9	17421011	1	Gasket		
10	17821012	2	Bolt,W/Washer		
11	17421012G.1	4	Bolt W/Washer (Generator)		

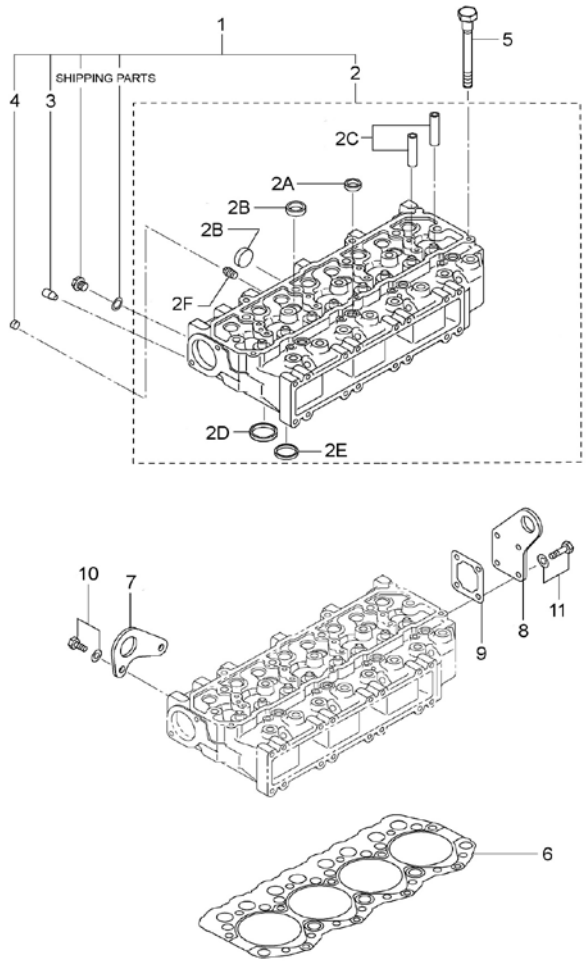

[NP] Not provided

Engine Body

D_MIE1_1_2			Rocker Cover & Breather		
FIG.	REF.	QTY	DESCR.	FROM	UPTO
1	17821009	1	Cover Assy,Rocker		
2	17821003	1	Cap Oil FILLER		
3	17421014G.1	5	Bolt W/Washer (Generator)		
4	17421010	1	Rocker Cover Gasket		
5	17821007	1	Clip,Hose		
6	17821006	1	Hose		

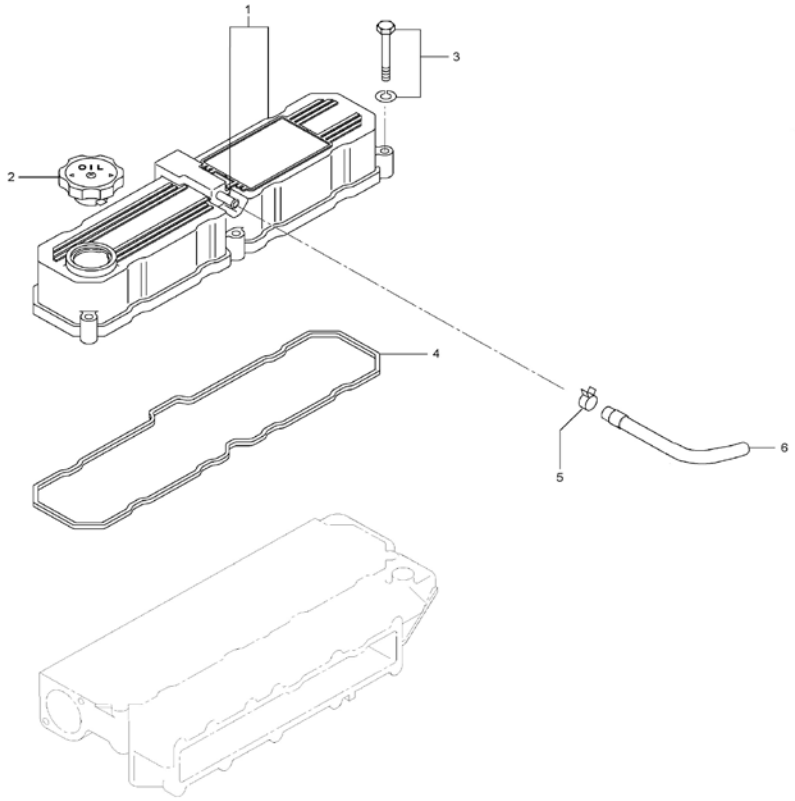

Engine Body

D_MIE1_1_3			Valve Drive		
FIG.	REF.	QTY	DESCR.	FROM	UPTO
1	17422055	4	Intake Valve		
2	17422056	4	Exhaust Valve		
3	13322028	8	Spring,valve outler		
4	17422058	8	Retainer,Upper		
5	17122059	16	COTTER,Valve		
6	13322024	8	Cap		
7	17422054	8	Seal,Valve Stem		
8	(*)	1	Not available [NP]		
8A	17222050	2	Ring, SNAP		
8B	17422046	1	Shaft Assy,Rocker		
8BA	13322023	2	Cap, SealING		
8C	17422048	4	Bracket,Rocker Shaft		
8D	17422053	4	Bolt,Rocker Bracket		
8E	17422142.1	8	Rocker Assy		
8EA	17122060	8	Nut		
8EB	17122044	8	Screw Adjusting		
8F	17422047G.1	3	Spring,Rocker		
8G	52102258	4	Bolt DIN 933 M8-25 8.8		
8H	53033008	4	Washer GROWER DIN 127-8		

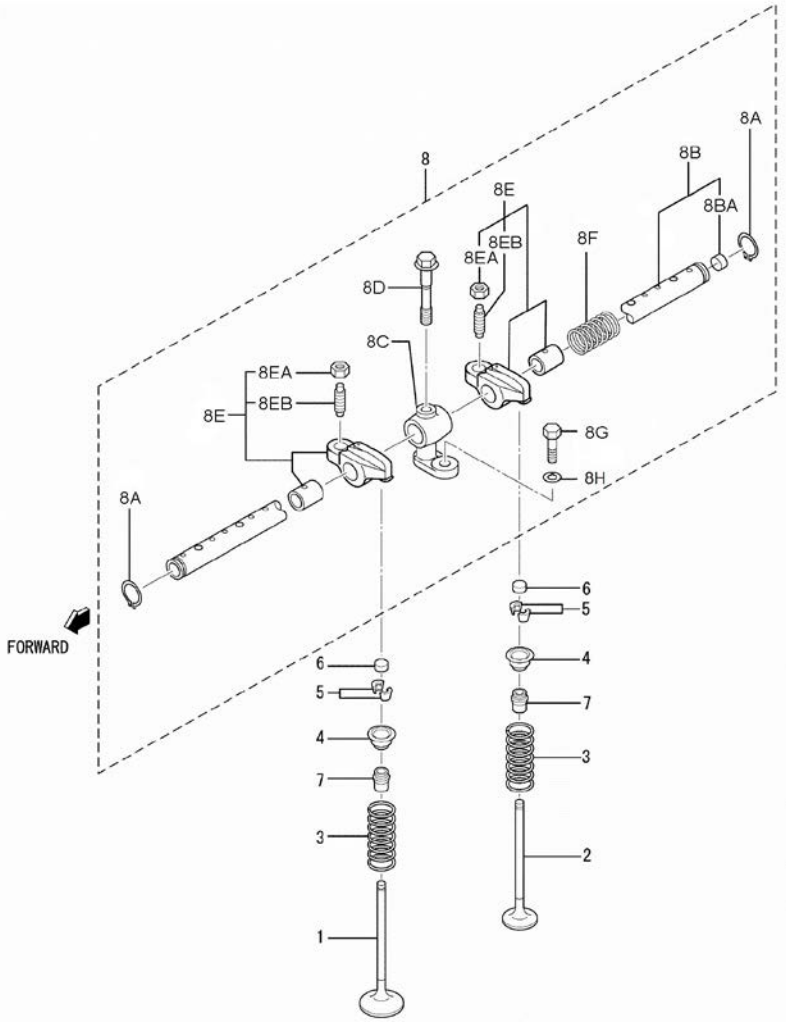

[NP] Not provided

Engine Body

D_MIF1_1_4			Timing Parts		
FIG.	REF.	QTY	DESCR.	FROM	UPTO
1	17922035	1	Camshaft		
2	13322034	1	KEY WOODRUFF		
3	17422075	1	Plate,THRUST		
4	17422037G.1	2	Bolt W/Washer (Generator)		
5	17122061	8	Tappet		
6	17122041	8	ROD, push		
7	17822019	1	Gear, CrankShaft		
8	17422037	1	Gear,CamShaft Z=46		
9	17810023	1	Gear, drive		
10	17822038	1	Gear,IDLER Assy Z=49		
11	17422066	1	Gear,Oil Pump Z=31		
12	52103256	2	Bolt DIN 912 M8-15 8.8		
13	17122032	1	Plate, thrust		
14	17720010	1	Bolt,W/Washer		

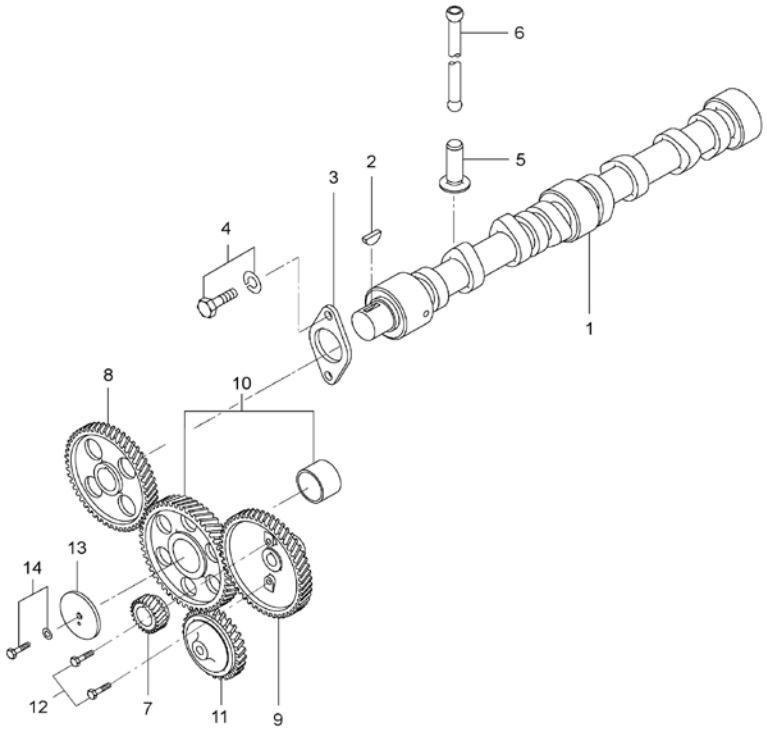

Engine Body

D_MIE1_1_5			Gear Case		
FIG.	REF.	QTY	DESCR.	FROM	UPTO
1	17420024G.1	1	Plate,Front (Generator)		
2	17420035G	1	Case,TIMING Gear		
3	17420018	1	Gasket,Front Plate		
4	17422037G.1	5	Bolt W/Washer (Generator)		
5	17420040	1	Gasket,Gear		
6	17520047	13	Bolt,W/Washer		
7	17420039.1	1	Seal Assy,Oil		
8	17811026	1	DriveR Plate,water pump		
9	17825002	1	Nut		
10	15310072	1	CrossHead		
11	17420047	1	O-Ring D. 140X2		
12	17810010	1	Block Water Pump		
13	13310013	1	Gasket,water pump		
14	53038008	4	Washer DIN 6798-A 8	26/06/2017	
15	53033008	1	Washer GROWER DIN 127-8		
16	52101269	5	Bolt DIN 931 M8-80 8.8		
17	51030006	4	Washer DIN 125-6		
18	52103156	4	Bolt DIN 912 M6-16 8.8		

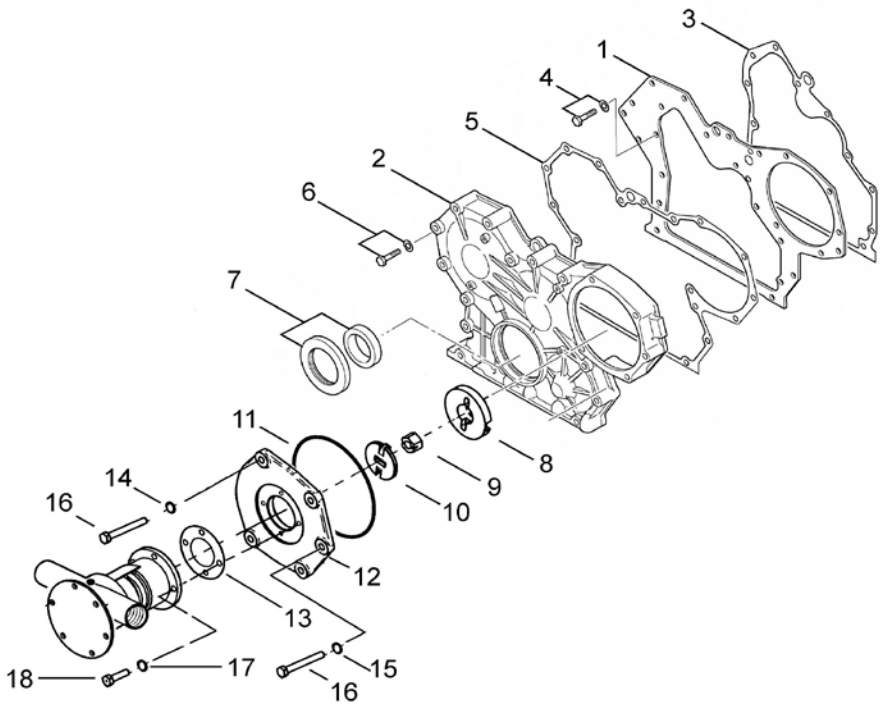

Engine Body

	D_MIF1_1_6		Cranckcase		
FIG.	REF.	QTY	DESCR.	FROM	UPTO
0	17820001	1	Crankcase Assy		
1	(*)	1	Not available [NP]		
1A	17120019	2	Pin, dowel		
1B	13320006	10	Cap, Sealing		
1C	17420009	10	Bolt Bearing Cap		
2	13320007	4	Cap, SealING		
3	17120022	1	Plug, tapered		
4	17820011	5	Plug, Tapered [NP]		
5	17420027G.1	2	Plug,TAPPERED (Generator)		
6	17120021	1	Plug TAPER [NP]		
7	17420112	2	Seal,Valve		
8	17420012	6	Pin,Spring		
9	17421046G.3	3	Plug		
10	17420013G.3	1	Plug		
11	13320025	2	Pin		
12	17820016	4	Pipe, Oil Jet		
13	17420011G.3	1	Bushing		
14	17420034	1	Shaft,IDLER		
15	17420036	2	Pin,Dowel		
16	17420109	3	Plate,THRUST.C/S STD		
17	17420110	3	Plate,THRUST.C/S +0,15		
18	17920004	3	Plate,THRUST.C/S +0,35		
19	17420003	1	METAL,MAIN Set STD		
20	17420004	1	METAL,MAIN Set -0,25		
21	17420005	1	METAL,MAIN Set -0,50		
22	17420006	1	METAL,MAIN Set -0,75		

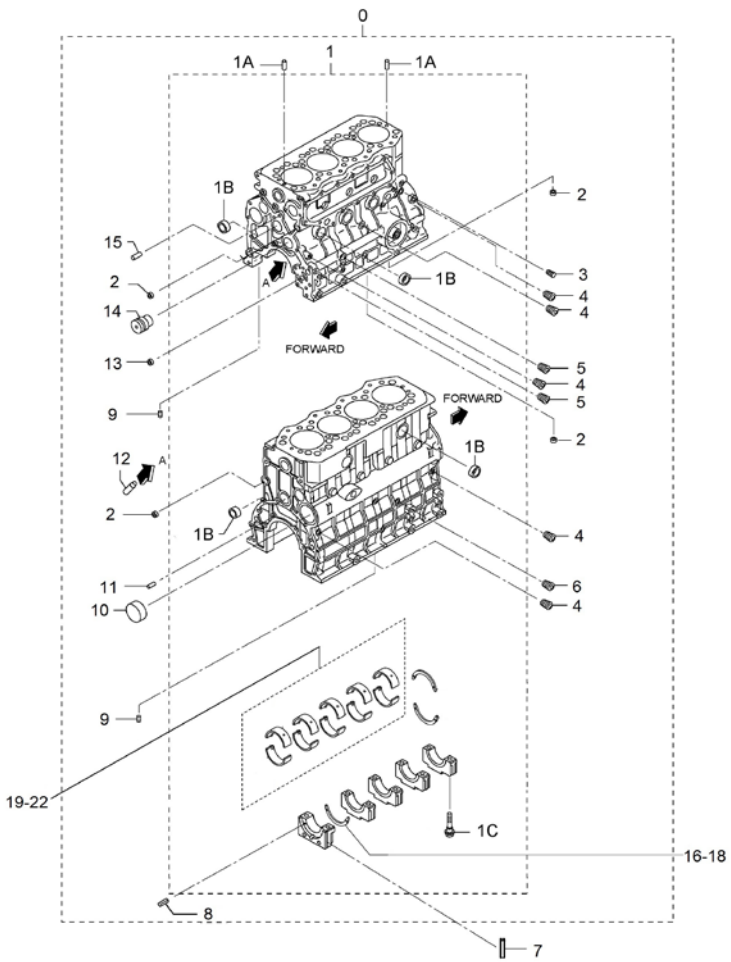

[NP] Not provided

Engine Body

D_MIE1_1_7			Rear Plate		
FIG.	REF.	QTY	DESCR.	FROM	UPTO
1	17820002	1	Flywheel Housing		
2	17420025	1	Gasket,REAR		
3	17327129.2	10	Bolt		
4	17420028G.1	2	Bolt,W/Washer (Generator)		
5	13320063	1	Seal Oil		
6	13320067	2	Stud		
7	17827003	2	Nut		
8	53033010	2	Washer GROWER DIN 127-10		
9	17121016	1	Plug, drain		
10	17121013	1	Gasket		
11	13224045	1	Plug		
12	56000077	1	Washer 18-23-1,5		

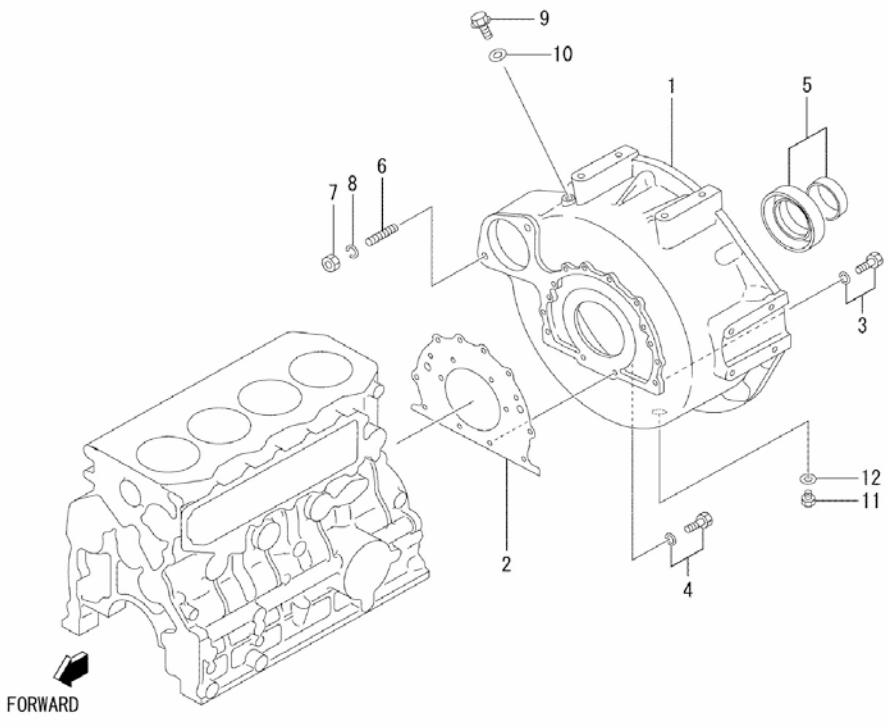

D_MIE1_1_8			Piston & Connectiong Rod		
FIG.	REF.	QTY	DESCR.	FROM	UPTO
1	17822001	4	Piston STD.		
2	17822002	4	Piston O.S 0,25		
3	17822003	4	Piston O.S 0,50		
4	17822006	4	Ring Set,Piston STD.		
5	17822007	4	Ring Set,Piston 0,25		
6	17822008	4	Ring Set,Piston 0,50		
7	17422009	4	Pin,Piston		
8	17422010	8	Ring,SNAP		
9	17822012	4	Rod Assy. Connecting		
9A	17822011	8	Nut		
9B	17122013	8	Bolt,connecting rod		
9C	17422033	4	Bushing,Con-Rod		
10	17122014	4	Half Bearing, con-rod Std.		
11	17422015	1	Bearing Set,Con-Rod,U.S 0,25		
12	17822016	1	Bearing Set, Con-Rod,U.S 0,50		
13	17822017	1	Bearing Set, Con-Rod,U.S 0,75		

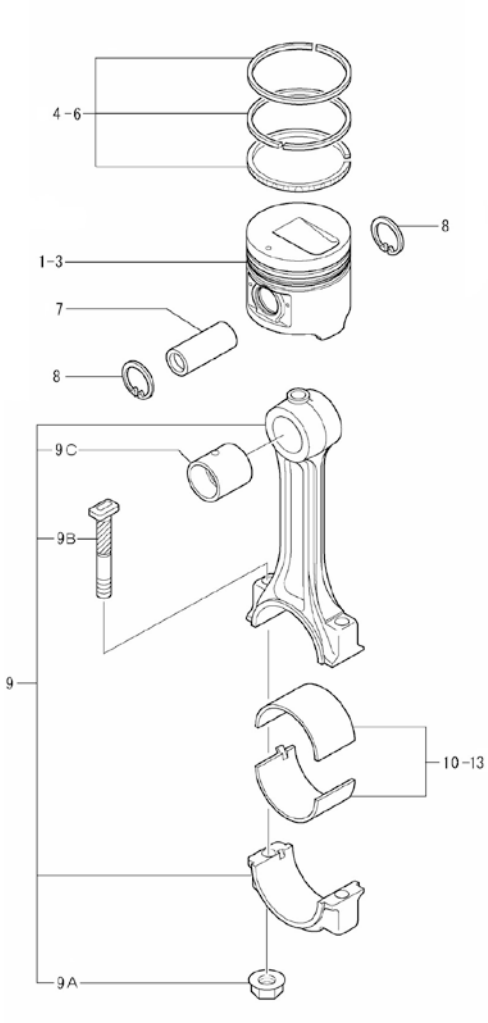

Engine Body

D_MIE1_1_9			Crankshaft & Flywheel		
FIG.	REF.	QTY	DESCR.	FROM	UPTO
1	17822018	1	CrankShaft Assy		
2	13322059	2	Pin		
3	13322034	2	KEY WOODRUFF		
4	(*)	1	Not available [NP]		
5	17422026	1	Nut,CrankShaft		
6	17822019	1	Gear, CrankShaft		
7	17422024	1	Pulley CrankShaft		
8	17422027	1	Flywheel Assy		
8A	17422029	1	Gear,Ring Z=122		
9	13322065	6	Bolt		
10	53033012	6	Washer GROWER DIN 127-12		

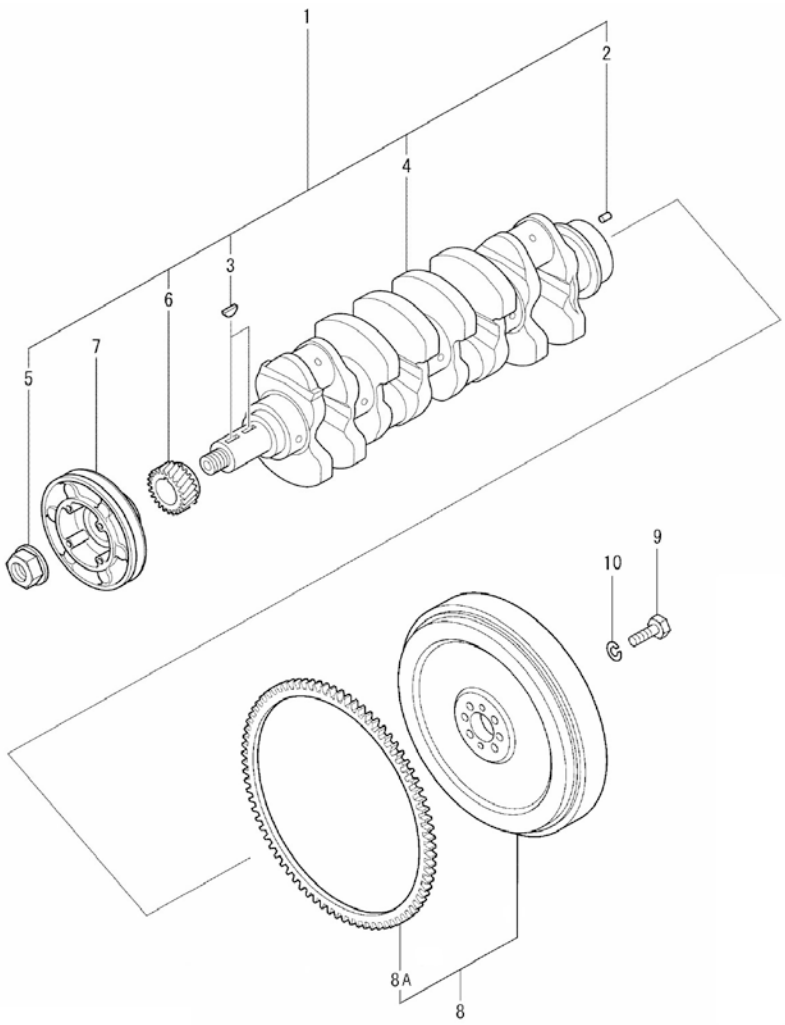

[NP] Not provided

Engine Body

D_MIE1_1_10			Oil System		
FIG.	REF.	QTY	DESCR.	FROM	UPTO
1	17524040	1	Pump Assy,Oil		
2	17424055	1	O-Ring D. 60X2		
3	17421012G.1	4	Bolt W/Washer (Generator)		
4	13122045	1	Nut		
5	53033010	1	Washer GROWER DIN 127-10		
6	17424052	1	STrainer,Oil		
7	17424060	1	O-Ring D. 22X2,4		
8	17422037G.1	2	Bolt W/Washer (Generator)		
9	17124071	1	Valve, Assy		
10	17424063	1	Gasket		
11	17824071	1	Valve, Assy		
12	17420017	1	Gasket		
13	17424051	1	Oil Filter Element		
14	17424054	1	Union,Oil Filter		
15	17827027	1	Switch, Oil pressure		
16	17117052	1	Oil Pressure Sensor Adaptor		
17	60900985	1	Pressure Sensor		

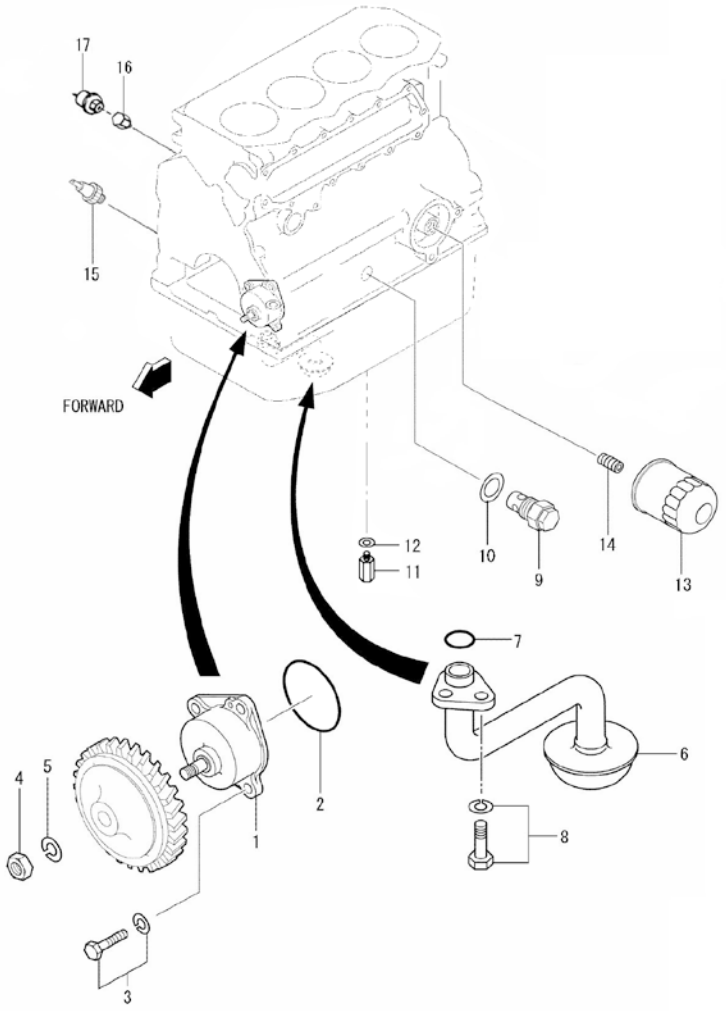

D_MIE1_1_11			Oil Pan		
FIG.	REF.	QTY	DESCR.	FROM	UPTO
1	53033012	1	Washer GROWER DIN 127-12		
2	17214022	1	Bracket, Pipe		
3	52102360	1	Bolt DIN 933 M12-35 8.8		
4	16514020	1	Plug		
5	56000219	1	Washer 14-20-3		
6	17114021	1	ExtraCTION Hose		
7	12814051	1	Screw,eye		
8	56000069	1	Washer 14-20-1,5		
9	56000069	1	Washer 14-20-1,5		
10	17420030	1	Oil PAN Assy		
11	17420029	1	Gauge Oil LEVEL		
12	17821012	24	Bolt,W/Washer		

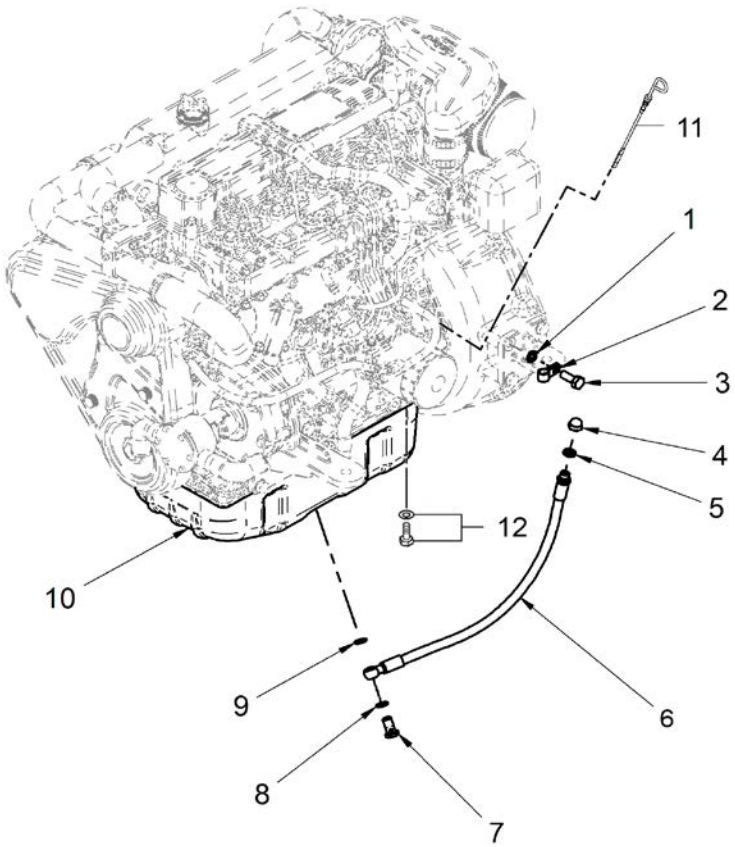

Engine Body

D_MIE1_1_12			Engine Brackets		
FIG.	REF.	QTY	DESCR.	FROM	UPTO
1	17410002	2	REAR Bracket		
2	17410001	2	Front Bracket		
3	61678000	4	Anti Vibration Mounts Type D 55Sh		
4	53033012	16	Washer GROWER DIN 127-12		
5	52102360	16	Bolt DIN 933 M12-35 8.8		

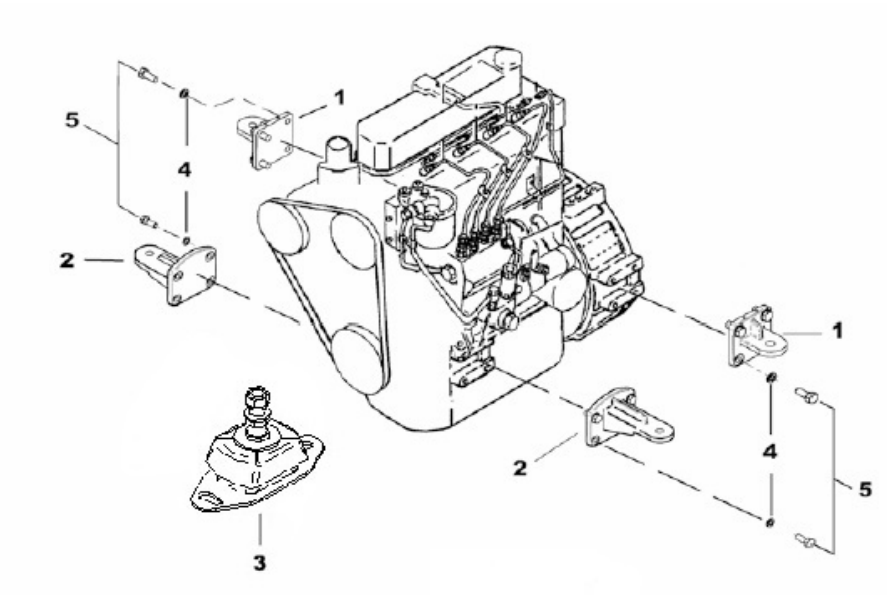

D_MIE1_1_13			Bracket, Engine Control		
FIG.	REF.	QTY	DESCR.	FROM	UPTO
1	12119021	1	SUPORT Clamp		
2	52102156	1	Bolt DIN 933 M6-16 8.8		
3	53033006	1	Washer GROWER DIN 127-6		
4	52102110	2	Bolt DIN 933 M5-30 8.8 CINCADO		
5	13819001	1	Clamp		
6	52120006	1	Nut DIN 934 M6 8.8		
7	14419023	1	Ball JOINT		
8	15119015	1	CABLE Holder Ball		

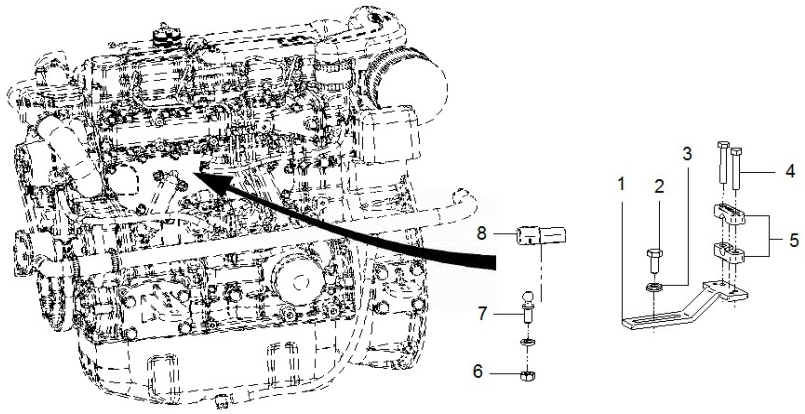

Engine Body

D_MIE1_1_14			Oil cooler		
FIG.	REF.	QTY	DESCR.	FROM	UPTO
1	17424060	2	O-Ring D. 22X2,4		
2	17822112	1	Gasket, Side Cover		
3	17822110	1	Cooler Assy, Oil		
3A	17822111	1	Case Assy, Oil Cooler		
3AA	17822120	1	Plug Tapered		
3B	17125008.1	5	Nut,Flange		
3C	13321019	1	Stud		
3D	17822114	1	Element, Oil Cooler		
3E	17520017	2	O-Ring D. 30X3,4		
3F	17822115	4	O-Ring		
4	17822116	15	Bolt, Flange		
5	17125008.1	5	Nut,Flange		
6	17822117	1	Cover		
7	17822118	1	Bolt, Flange		
8	17420048	1	Gasket		

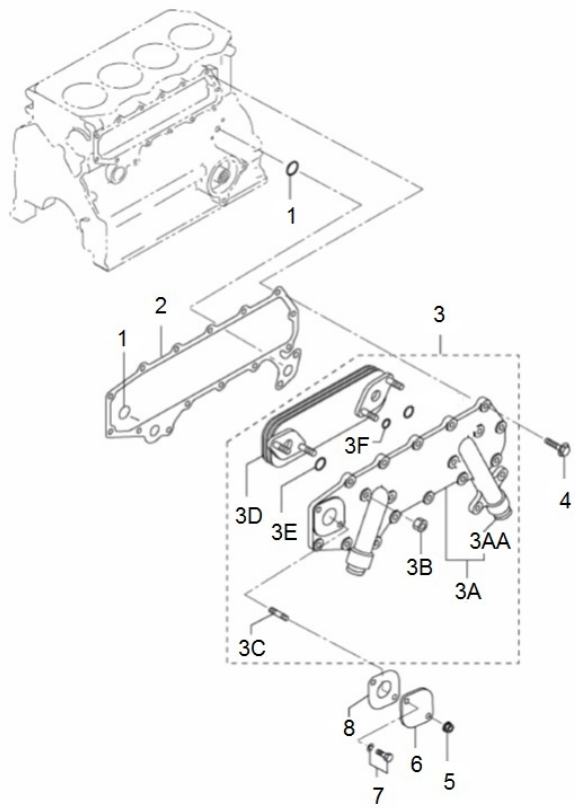

D_MIE1_1_15			Belt Protection		
FIG.	REF.	QTY	DESCR.	FROM	UPTO
1	17810021	1	Belt Protection		
2	17810022	1	Bracket Protection Belt		
3	53033006	2	Washer GROWER DIN 127-6		
4	52102156	2	Bolt DIN 933 M6-16 8.8		
5	13810070	3	Knob		

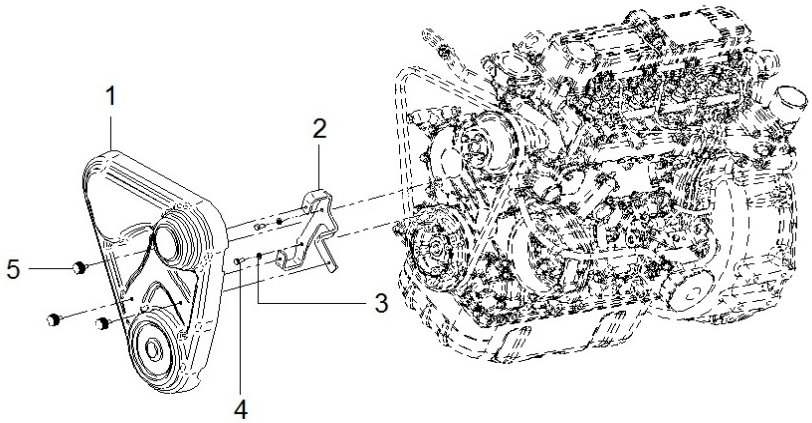

Inlet & Exhaust

	D_MIF1_2_1		Inlet		
FIG.	REF.	QTY	DESCR.	FROM	UPTO
1	17821030	1	Manifold Assy,Inlet		
2	17421032	1	Gasket IN.MANIFOld		
3	54082040	2	Clamp DIN 3017 40-60/12 W4		
4	17810030	1	Hose		
5	54081020	1	Clamp DIN 3017 20-32/9 W4		
6	17810013	1	Elbow,Frared Tube		
7	17810017	1	Adaptor		
8	54082050	3	Clamp DIN 3017 50-70/12 W4		
9	17910012	1	Air Filter		
10	17810031	1	Hose		
11	17125004.1	4	Bolt		
12	17821013	1	Nipple, Air		
13	17821017	2	Clip,Hose		
14	17821015	1	Cap,Sealing		
15	17421014G	2	Bolt (Generator)		
16	53033008	2	Washer GROWER DIN 127-8		
17	17821016	1	Clip,Hose		
18	17421014G.1	14	Bolt W/Washer (Generator)		
19	17421042	1	Gasket		
20	17821029	1	Elbow, Air Inlet		
21	17910020	1	Spacer, Turbocharger		
22	53033008	2	Washer GROWER DIN 127-8		
23	52102257	2	Bolt DIN 933 M8-20 8.8		
24	17818010	1	Termic, Bucklers	07/12/2016	

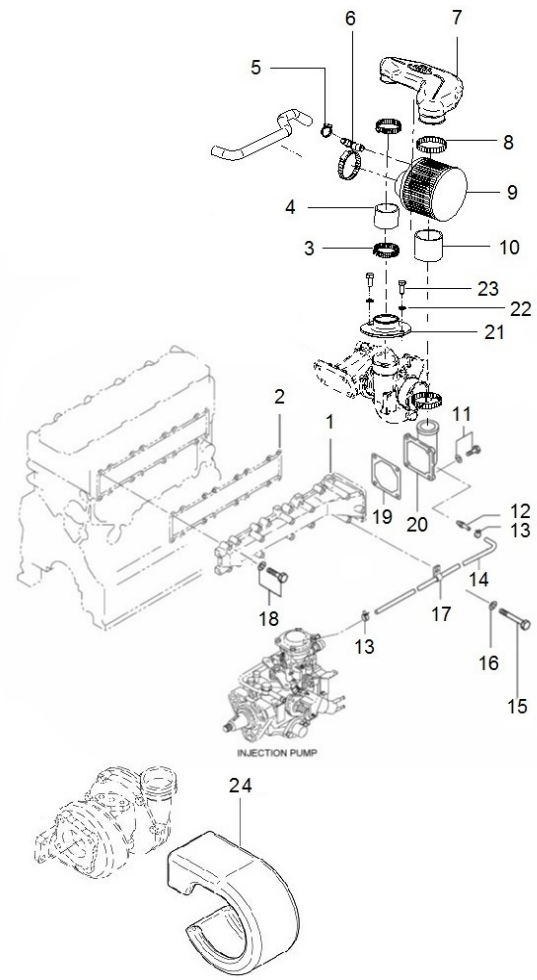

Inlet & Exhaust

D_MIF1_2_2			Turbocharger		
FIG.	REF.	QTY	DESCR.	FROM	UPTO
1	17812007	1	Elbow		
2	17124056	2	Gasket		
3	17712006	1	Pipe		
4	17828006	1	Bolt, Eye		
5	17420049	1	Gasket		
6	17928012	1	Turbocharger, Assy		
7	17712004	1	Gasket		
8	52102156	2	Bolt DIN 933 M6-16 8.8		
9	17912005	1	Pipe		
10	54081020	2	Clamp DIN 3017 20-32/9 W4		
11	17728007	1	Hose,Oil		
12	17728008	1	Elbow		

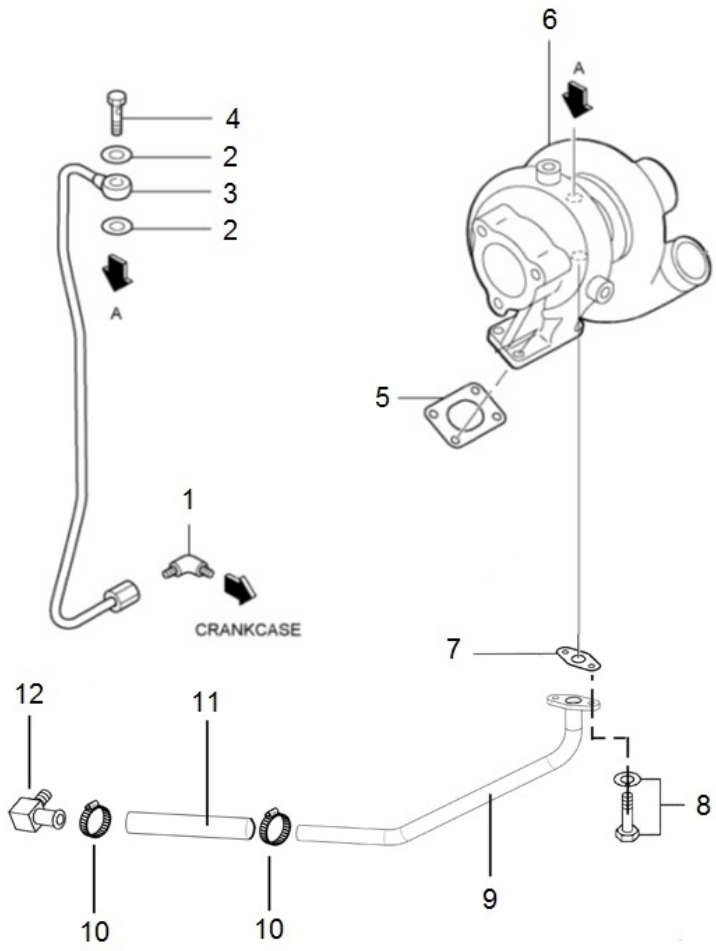

D_MIF1_2_3			Spare parts, Turbocharger		
FIG.	REF.	QTY	DESCR.	FROM	UPTO
0	17928012	1	Turbocharger, Assy		
1	17928012.9	1	Rotor, Turbine		
2	17928012.8	1	Cover, Compressor		
3	17928012.10	1	Housing, Turbine		
4	17928012.6	1	O-Ring		
5	17828012.10	1	Ring, Snap		
6	17828002.9	1	Coupling Assy		

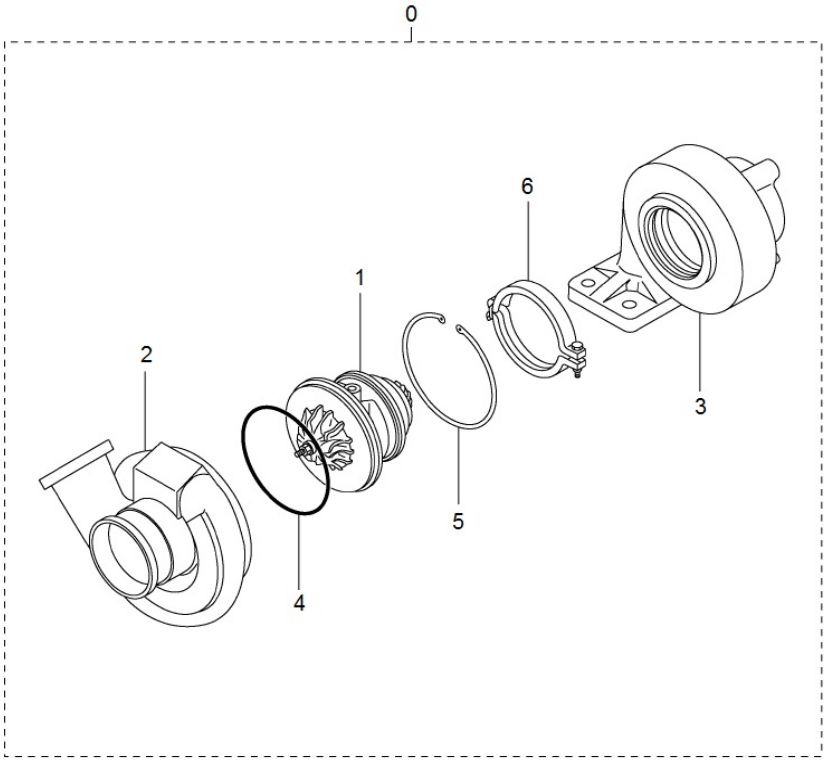

D_MIF1_3_1			Water Pump		
FIG.	REF.	QTY	DESCR.	FROM	UPTO
1	17421020G.1	1	Fresh Water Pump (tube Ø18)		
1A	17421043	1	Cover,Water Pump		
1B	17020023	1	Plug TAPER 3/8		
1C	17421022	1	Gasket,Pump Cover		
1D	17821026	2	Bolt, Flange		
1E	17421026G	1	Bolt,Flange		
2	17421041	1	Gasket,Side Cover		
3	17421039G.1	4	Bolt,W/Washer (Generator)		
4	17121021	1	Pulley,Water Pump		
5	17121056	4	Bolt DIN 933 M8-15 8.8		
6	17421037G.1	1	Case Assy (Generator)		
7	17421016G.1	1	Gasket(Generator)		
8A	17821038	1	Bolt, Flange		
8B	17821038	1	Bolt, Flange		
9	17821039	1	Bolt, Flange		
10	17421025G.1	1	Hose,BY-PASS (Generator)		
11	54081020	2	Clamp DIN 3017 20-32/9 W4		
12	60900980	1	Temperature Sensor		
13	17121016	1	Plug, drain		
14	17121013	1	Gasket		
15	17821031	1	Gasket		
16	17121027	1	Thermostat		
17	17111020	1	FITTING,water outlet		
18	52101263	1	Bolt DIN 931 M8-50 8.8		
19	52102259	1	Bolt DIN 933 M8-30 8.8		
20	53033008	2	Washer GROWER DIN 127-8		
21	56000073	1	Copper Washer 16-23-1,5		
22	17427080	1	SWITCH,THERMO		
23	17420062G.1	1	Bolt,W/Washer (Generator)		

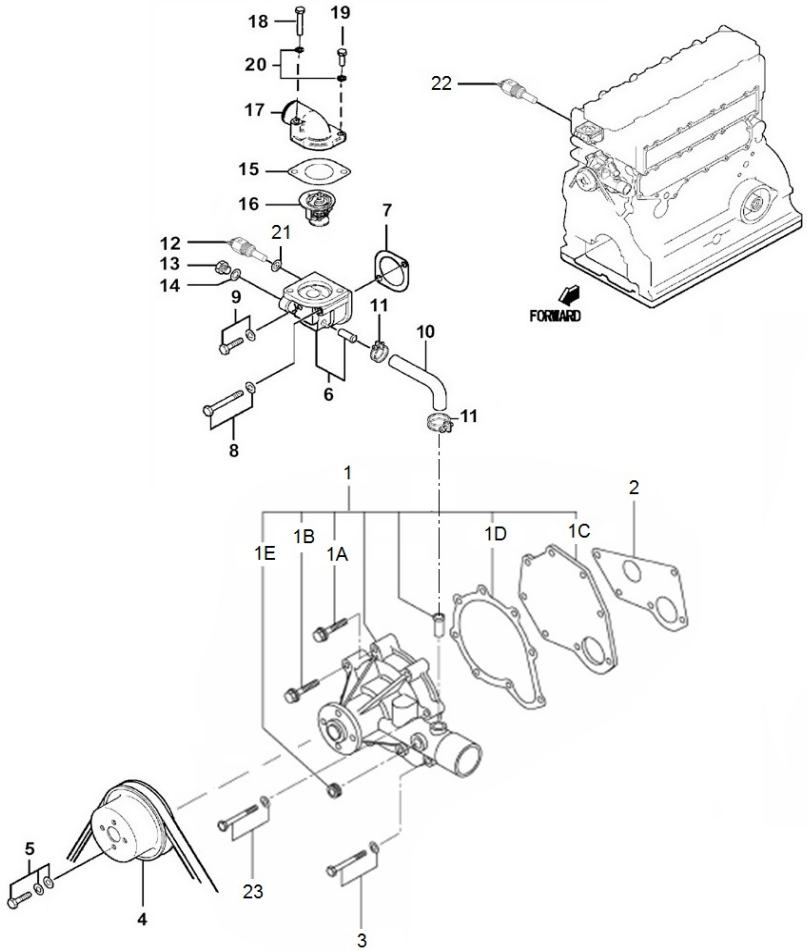

Cooling System

D_MIE1_3_2			Cooler Pipes		
FIG.	REF.	QTY	DESCR.	FROM	UPTO
1	17811000	1	Water Cooler Assy SM-82/94		
2	37811001	1	1" Water Pump, Set		
3	14711021	2	Hose Nº 1		
4	14711022	1	Hose Nº 2		
5	54082032	6	Clamp DIN 3017 32-50/12 W4		
6	15211026	1	Elbow,rubber		
7	17011022	1	Pipe,from cooler to engine		
8	17411013	1	Elbow,Engine Water Exhaust		
9	16711016	1	Rubber Elbow		
10	17111020	1	FITTING,water outlet		
11	13211036	1	Pipe 30-40-100		
12	17411011	1	Pipe		
13	60180007	1	Outlet Coupling		
14	17811034	1	Rubber Wet Exhaust Inlet Bend		
15	17511014	1	Bracket		
16	52120006	1	Nut DIN 934 M6 8.8		
17	53033006	1	Washer GROWER DIN 127-6		
18	52102259	1	Bolt DIN 933 M8-30 8.8		
19	53033008	1	Washer GROWER DIN 127-8		
20	59071383	1	Clamp TYP.1 38/15 W1		
21	52102157	1	Bolt DIN 933 M6-20 8.8		
22	51030006	1	Washer DIN 125-6		
23	17421035	1	Gasket,Exhaust MANIFOld		
24	13311006	4	Stud,cover		
25	52102258	4	Bolt DIN 933 M8-25 8.8		
26	53038008	4	Washer DIN 6798-A 8		
27	54082025	4	Clamp DIN 3017 25-40/12 W4		
28	51125008	4	Nut Exhaust		

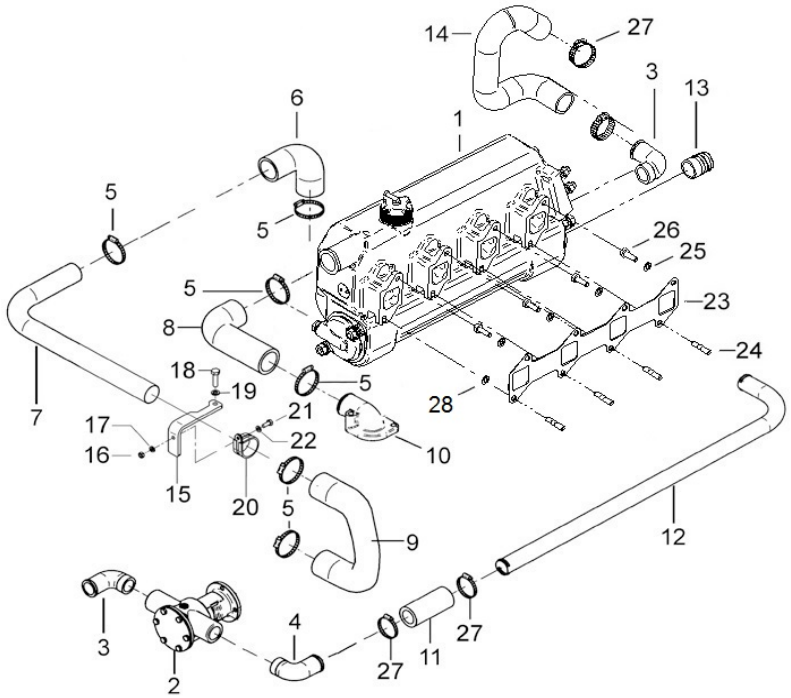

Cooling System

17811000			Water Cooler Assy SM-82/94		
FIG.	REF.	QTY	DESCR.	FROM	UPTO
1	17811001	1	Body, Warter Cooler [NP]		
2	18011004	1	Tubular Bundle		
3	18011008	2	O-Ring D. 72X3		
4	17411003	1	Water Cooler Cover		
5	16511007	8	Stud		
6	51030010	4	Washer DIN 125-10		
7	53033010	8	Washer GROWER DIN 127-10		
8	52120010	4	Nut DIN 934 M10 8.8		
9	56000061	1	Washer 10-16-1,5	07/03/2017	
10	54102306	1	Bolt DIN 933 M10-16 INOX.		
11	56000073	2	Copper Washer 16-23-1,5		
12	12111076	1	Plug		
13	18011002	1	Water Cooler Cover		
14	18011031	1	Engine Anode		
15	18011009	1	Anode Plug		
16	12113092	1	Plug		
17	13811010	1	Cap		
18	17111011	1	Elbow 1 1/8"		
19	55120110	4	Nut DIN 934 M10		

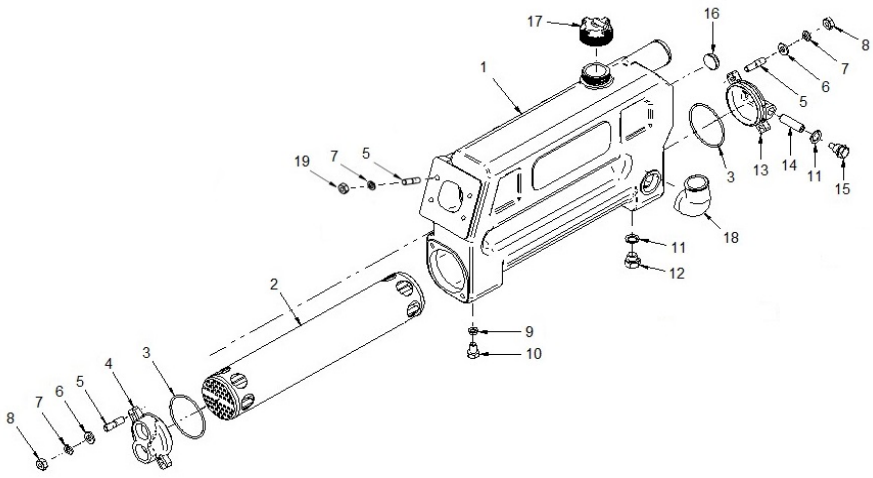

[NP] Not provided

Cooling System

	37811000		1" Water Pump, Set		
FIG.	**REF.**	**QTY**	**DESCR.**	**FROM**	**UPTO**
1	34711002	1	Cover Pump		
2	34711003	1	Gasket Cover		
3	34711041	1	Impeller Plug		
4	34711008	1	1" Impeller		
5	37811005	1	Cam 6,5 mm		
6	34711026	1	Plate,Friction		
7	54040016	1	CIRClip E-16		
8	36511018	1	Washer,seal		
9	36511019	1	Seal		
10	33311013	1	O-Ring D. 15X2		
11	36511001	1	Body,water pump		
12	36511017	1	Pin,Dowel	18/05/2007	
13	54108154	1	Bolt DIN 84 M6-10		
14	54102154	6	Bolt DIN 933 M6-10 INOX		
15	36511010	1	Shaft,pump		
16	36511015	1	Spacer 17X24X7		
17	33311014	2	Ball Bearing 6203		
18	53040017	1	CIRClip DIN 471 E-17		
19	36511020	1	Seal 16-30-7		
20	53041040	1	CIRClip DIN 472 I-40		

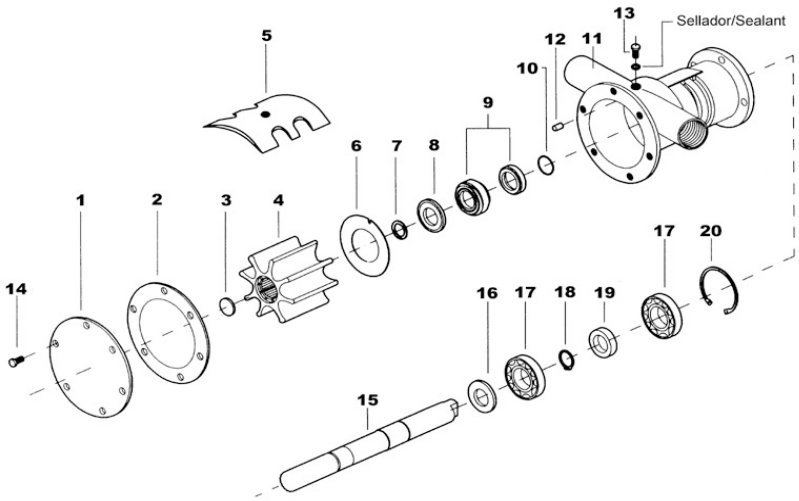

D_MIF1_3_5			Wet Exhaust		
FIG.	REF.	QTY	DESCR.	FROM	UPTO
1	17813014	1	Adaptor		
2	52103258	3	Bolt DIN 912 M8-25 8.8		
3	17813016	1	Gasket		
4	17813015	1	Elbow,wet exhaust		
5	53033008	3	Washer GROWER DIN 127-8		
6	52103259	3	Bolt DIN 912 M8-30 8.8		

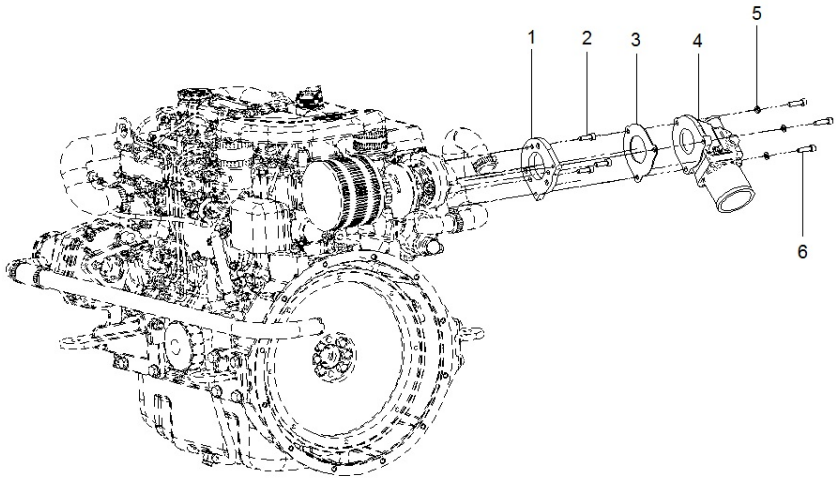

Fuel System

D_MIF1_4_1			Fuel Pipe		
FIG.	REF.	QTY	DESCR.	FROM	UPTO
1	17825002	1	Nut		
2	17825006	1	O-Ring		
3	17825005	1	Flange, Inj. Pump		
4	17825007	1	O-Ring		
5	17125009.1	3	Stud		
6	17721012	1	Bolt,W/Washer		
7	17125008.1	3	Nut,Flange		
8	17120062	1	Bolt,w/washer		
9	17825010	1	Washer		
10	17825011	2	Bolt,W/Washer		
11	51030010	2	Washer DIN 125-10		
12	17825013	1	Bracket , Injection Pump		
13	17425036	1	Bolt,Flange		
14	17825015	1	Bracket , Injection Pump		
15	17825016	1	Nut, Flange		
16	17933008	1	Pump Assy,Fuel Injection		
17	17824014	1	Stay		
18	17120022	2	Plug, tapered		
19	17824007	4	Gasket, Nozzle		
20	17824008	1	Cap		
21	17422037G.1	1	Bolt W/Washer (Generator)		
22	17926001	4	Nozzle, Assy		
23	17824006	11	Clip,Hose		
24	17824005	5	Hose		
25	17822118	4	Bolt, Flange		
26	17824013	4	Support, Nozzle		
27	17524025	4	Bolt,W/Washer		
28	17824011	6	Clamp		
29	17824012	2	Clamp		
30	17824015	1	Pipe Injection N.1		
31	17824016	1	Pipe Injection N.2		
32	17824019	1	Pipe Injection N.3		
33	17824022	1	Pipe Injection N.4		
34	17824002	1	Pipe, Fuel Return		

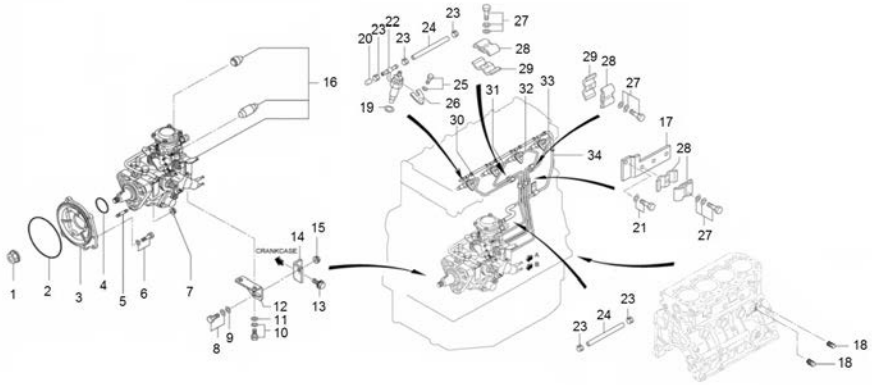

D_MIF1_4_2			Injection Nozzle		
FIG.	REF.	QTY	DESCR.	FROM	UPTO
0	17926001	4	Nozzle, Assy		
1	17928018	4	Tip Assy, Nozzle		
2	17926003	4	Holder		
2A	17926002	4	Body, Assy		
2B01	17826020	0	Washer [VAR]		
2B02	17026144	0	Washer 1,050 [VAR]		
2B03	17026145	0	Washer 1,100 [VAR]		
2B04	17026146	0	Washer 1,150 [VAR]		
2B05	17026010	0	Washer 1,20 [VAR]		
2B06	17026011	0	Washer 1,25 [VAR]		
2B07	17026012	0	Washer 1,30 [VAR]		
2B08	17026013	0	Washer 1,35 [VAR]		
2B09	17926014	0	Washer 1,400 [VAR]		
2B10	17926015	0	Washer 1,450 [VAR]		
2B11	17026016	0	Washer 1,50 [VAR]		
2B12	17026017	0	Washer 1,55 [VAR]		
2B13	17026019	0	Washer 1,60 [VAR]		
2B14	17026020	0	Washer 1,65 [VAR]		
2B15	17926021	0	Washer 1,700 [VAR]		
2B16	17026022	0	Washer 1,75 [VAR]		
2B17	17026023	0	Washer 1,80 [VAR]		
2B18	17026131	0	Washer 1,275 [VAR]		
2B19	17026132	0	Washer 1,325 [VAR]		
2B20	17026133	0	Washer 1,375 [VAR]		
2B21	17026134	0	Washer 1,425 [VAR]		
2B22	17026135	0	Washer 1,475 [VAR]		
2B23	17926099	0	Washer 0,950 [VAR]		
2B24	17926100	0	Washer 0,700 [VAR]		
2B25	17926101	0	Washer 0,750 [VAR]		
2B26	17926102	0	Washer 0,800 [VAR]		
2B27	17926103	0	Washer 0,850 [VAR]		
2B28	17926104	0	Washer 0,900 [VAR]		
2B29	17926105	0	Washer 0,975 [VAR]		
2B30	17926106	0	Washer 1,025 [VAR]		
2B31	17926107	0	Washer 1,075 [VAR]		

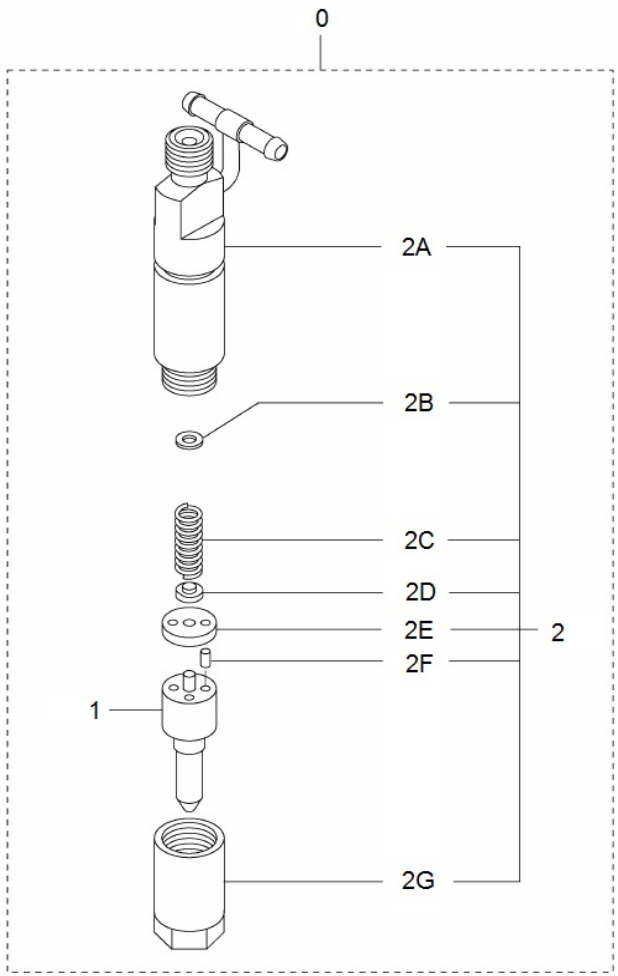

[VAR] Variable according to repair

D_MIF1_4_2			Injection Nozzle		
FIG.	REF.	QTY	DESCR.	FROM	UPTO
2B32	17926108	0	Washer 1,125 [VAR]		
2B33	17926109	0	Washer 1,175 [VAR]		
2B34	17926110	0	Washer 1,225 [VAR]		
2C	17026104	4	Spring,pressure		
2D	17026103	4	Pin,pressure		
2E	17026107	4	Packing,tip		
2F	17026008	8	Pin Straight		
2G	17826006	4	Nut, Retaining		

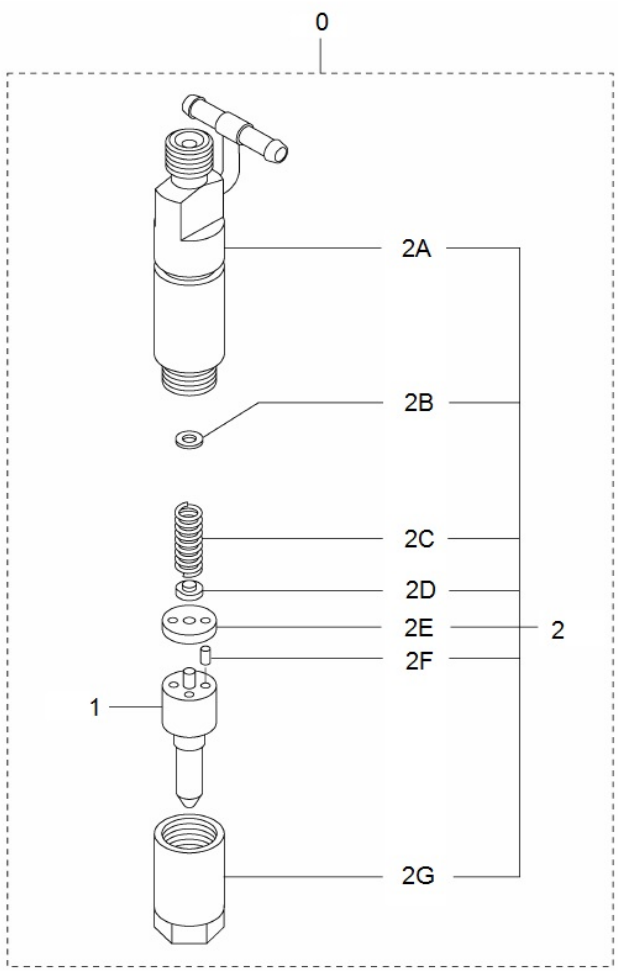

D_MIE1_4_5			Fuel Supply Parts		
FIG.	REF.	QTY	DESCR.	FROM	UPTO
1	17824020	1	Fuel Filter Assy [NP]		
1A	17824026	1	Cover,filter		
1B	17114022	1	Gas-Oil Filter Element		
1C	17824027	1	Plug Set, Air		
2	52102257	2	Bolt DIN 933 M8-20 8.8		
3	53038008	2	Washer DIN 6798-A 8		
4	17814001	1	Bracket, Fuel Filter		
5	52102258	2	Bolt DIN 933 M8-25 8.8		
6	53033008	2	Washer GROWER DIN 127-8		
7	17814002	1	Pipe		
8	51086016	2	ONE EAR Clamp With INTERIOR Ring		

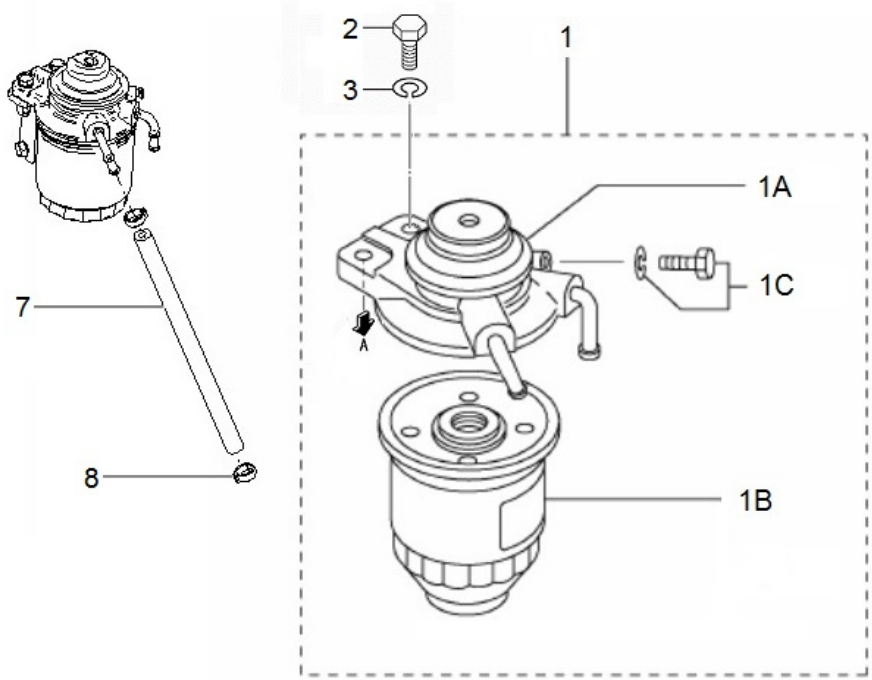

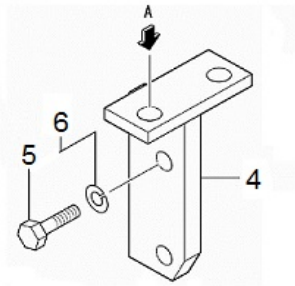

[NP] Not provided

D_MIE1_5_1			Kit Alternador 14V/95A		
FIG.	REF.	QTY	DESCR.	FROM	UPTO
1	17427002	1	Bracket,Alternator		
2	17117025	1	Alt. 14V/95A Mahle		
3	52102259	1	Bolt DIN 933 M8-30 8.8		
4	51031008	1	Washer DIN 9021 8		
5	53038008	1	Washer DIN 6798-A 8		
6	52120008	2	Nut DIN 934 M8 8.8		
7	17417025	1	Spacer 13.5x10.2x11		
8	51030010	1	Washer DIN 125-10		
9	53033010	1	Washer GROWER DIN 127-10		
10	52101325	1	Bolt DIN 931 M10-120 8.8		
11	17117016.7	1	Pulley		
12	51030016	1	Washer DIN 125-16		
13	51030005	2	Washer DIN 125-5		
14	17425036	2	Bolt,Flange		
15	52120005	1	Nut DIN 934 M5 8.8		
16	17427007	1	Plate,Adjusting		
17	51030008	1	Washer DIN 125-8		
18	17421028	1	Belt Type SPA 1180		

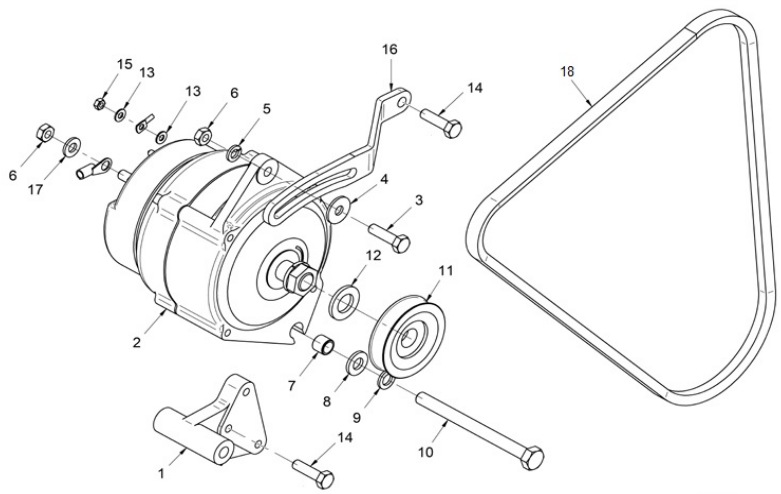

12V Electrical System

D_MIE1_5_5			Electrical Wiring		
FIG.	REF.	QTY	DESCR.	FROM	UPTO
1	13817003	1	Cover		
2	52102308	2	Bolt DIN 933 M10-25 8.8		
3	53033010	2	Washer GROWER DIN 127-10		
4	17817001	1	Bracket		
5	13827005	1	Glow Relay		
6	51030006	2	Washer DIN 125-6		
7	52102154	2	Bolt DIN 933 M6-10 8.8		
8	52102104	1	Bolt DIN 933 M5-10 8.8		
9	51030005	1	Washer DIN 125-5		
10	13817007	1	Rubber Cover		
11	13817006	1	Cover		
12	13817005	1	Relay 6V		
13	51031006	1	Washer DIN 9021 6		
14	52102154	1	Bolt DIN 933 M6-10 8.8		
15	17827017	4	Plug, Glow		
16A	60938210.1	0	Engine Wiring Ext. 3 M. SUPERSEAL [VAR]		
16B	60985210.1	0	Engine Wiring Ext. 4 M. SUPERSEAL [VAR]		
16C	60985210.12.1	0	Engine Wiring Ext. 12 M. SUPERSEAL [VAR]		
16D	60985210.24.1	0	Engine Wiring Ext. 24 M. SUPERSEAL [VAR]		
17	60978200R	1	Wiring Electrical SM-82/94 SVT		
18	17427018	1	Plate Glow Plug		

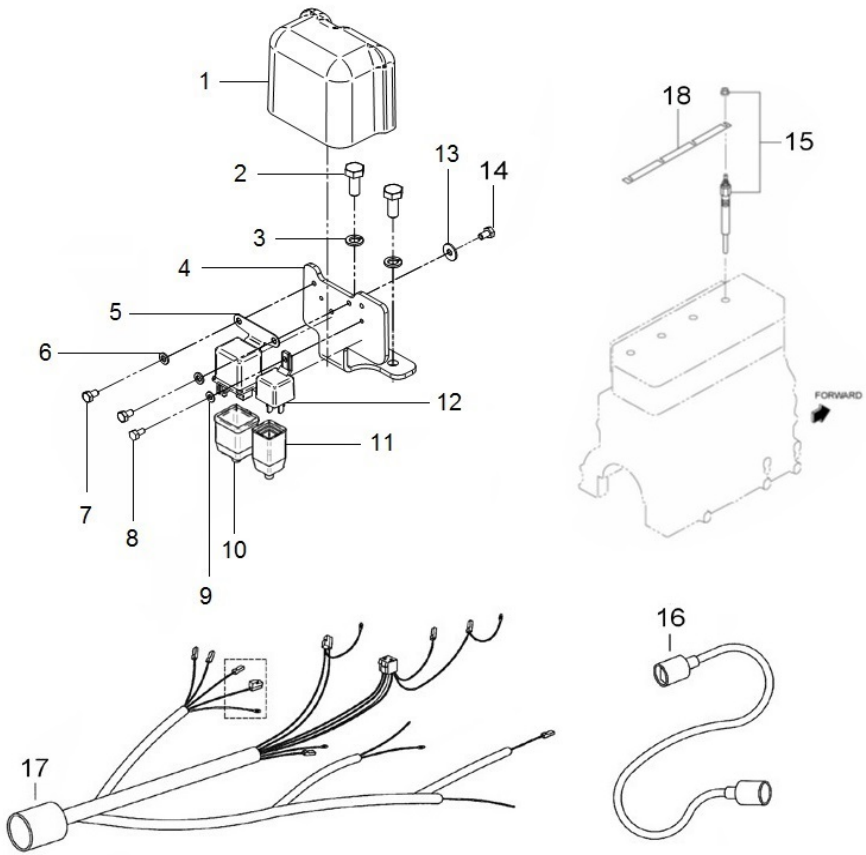

[VAR] Variable according to repair

12V Electrical System

D_60978100			SVT 30 SM-82/94 Panel		
FIG.	REF.	QTY	DESCR.	FROM	UPTO
1	54108003	2	Bolt DIN 84 M3-8 INOX.		
2	60900037	1	Key-Locking		
3	60900037.2	1	Connector		
4	60900910.2	5	Nut 8-32 W/CapTIVE STAR Washer		
5	60900931	4	SOCKET,WEDGE BASE		
6	60900929	4	Bulb 12V		
7	60990005.1	1	Panel N.3		
8	60990006.1	1	Gasket Panel		
9	60900096	1	Cover Plate for Motor Propeller		
10	60900301.2	1	V3 C.I. 12V Prop. Engine Board.Varnished [NP]		
11	60900910.1	1	MTG Bracket 3" LG GA AMEGA		
12	60900915.2	3	MTG Bracket		
13	60900941	1	VOLTMETER 12V		
14	60978900	1	Tachometer SM-82/94 SVT		
15	60900937	1	Water Gauge 12 V		
16	60900939	1	Oil Pressure Gauge 12V		
NS	60910014	1	System Back Panel SVT/MVT 30 12V [NS]	07/12/2016	
NS	60900091	1	MICRO Relay 12V 12-20 [NS]		

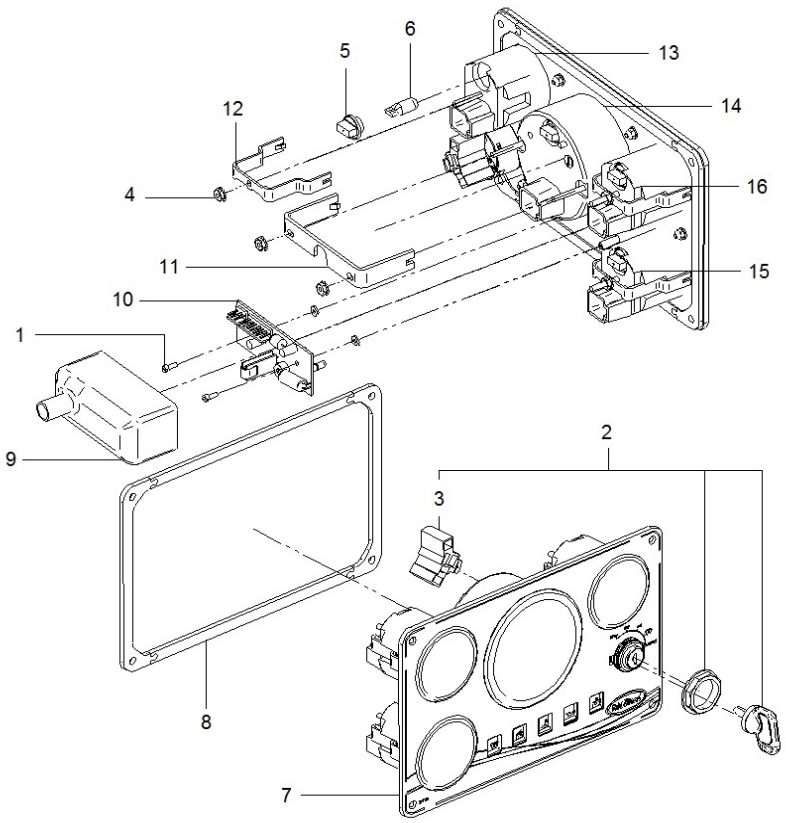

[NP] Not provided
[NS] Not shown

Maintenance Kit

	D_17920101		Gasket Kit		
FIG.	**REF.**	**QTY**	**DESCR.**	**FROM**	**UPTO**
0	17920101	1	Gasket Kit		
1	17822115	4	O-Ring		
2	17520017	2	O-Ring D. 30X3,4		
3	17120058	2	O-Ring D. 13X2,5		
4	17120058	1	O-Ring D. 13X2,5		
5	17825007	1	O-Ring		
6	17520074	2	Washer,SealING		
7	17420047	1	O-Ring D. 140X2		
8	17121013	2	Gasket		
9	17421011	1	Gasket		
10	17422054	8	Seal,Valve Stem		
11	17421010	1	Rocker Cover Gasket		
12	17420018	1	Gasket,Front Plate		
14	17420112	2	Seal,Valve		
15	17420025	1	Gasket,REAR		
16	17420040	1	Gasket,Gear		
18	17421032	1	Gasket IN.MANIFOld		
19	17024013	4	Gasket Nozzle		
20	17821014	1	Gasket		
21	17424055	1	O-Ring D. 60X2		
22	17822112	1	Gasket, Side Cover		
23	17421022	1	Gasket,Pump Cover		
24	17421041	1	Gasket,Side Cover		
25	17821031	1	Gasket		
26	17421016G.1	1	Gasket(Generator)		
27	34711003	1	Gasket Cover		
28	13310013	1	Gasket,water pump		
29	17824007	4	Gasket, Nozzle		
30	17420048	1	Gasket		
31	17821004	1	Gasket,Cylinder Head		
32	17420049	1	Gasket		
33	17421042	1	Gasket		
34	17524091	1	Gasket,Oil Pipe		
35	17424063	1	Gasket		
36	17421014	1	Gasket		

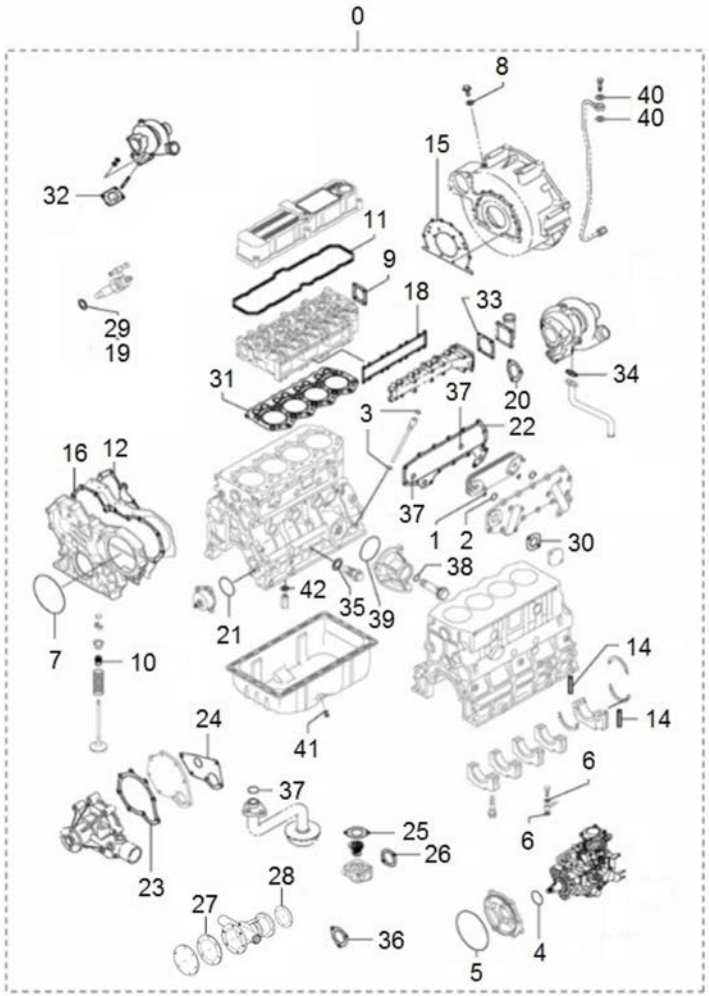

Maintenance Kit

D_17920101			Gasket Kit		
FIG.	**REF.**	**QTY**	**DESCR.**	**FROM**	**UPTO**
37	17424060	3	O-Ring D. 22X2,4		
38	17524056	1	O-Ring D. 40X6		
39	17524059	1	O-Ring D. 95X3		
40	17124056	2	Gasket		
41	17120074	1	Gasket		
42	17420017	2	Gasket		

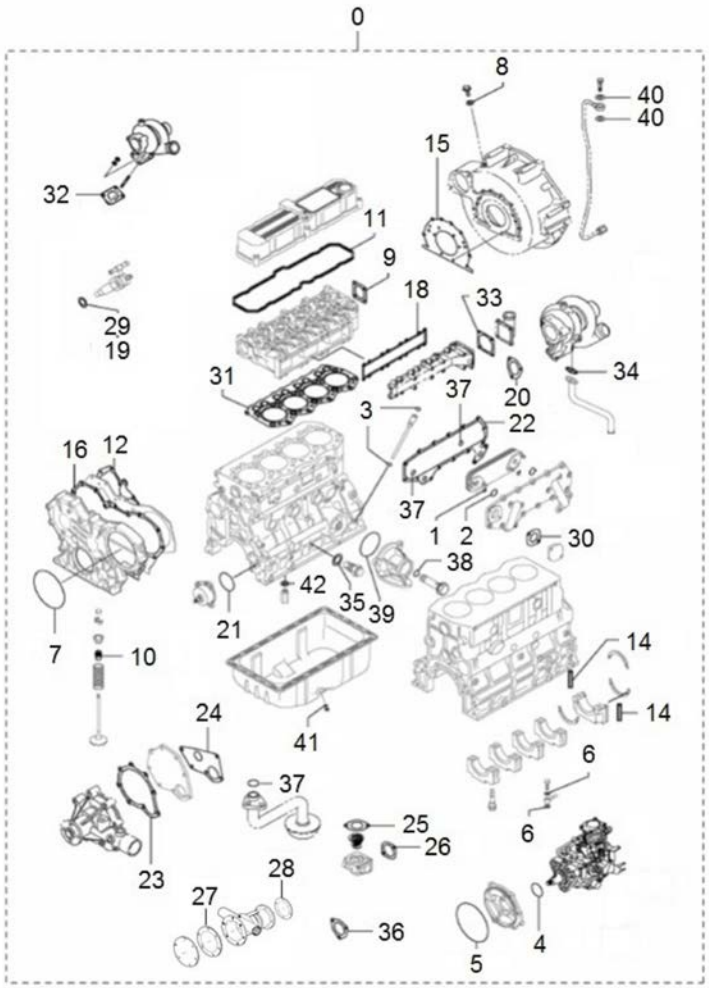

Maintenance Kit

17811100			Pipe Rubber Set,Water Line SM-82/SM-94		
FIG.	**REF.**	**QTY**	**DESCR.**	**FROM**	**UPTO**
1	17811034	1	Rubber Wet Exhaust Inlet Bend		
2	15211026	1	Elbow,rubber		
3	17411013	1	Elbow,Engine Water Exhaust		
4	16711016	1	Rubber Elbow		
5	13211036	1	Pipe 30-40-100		

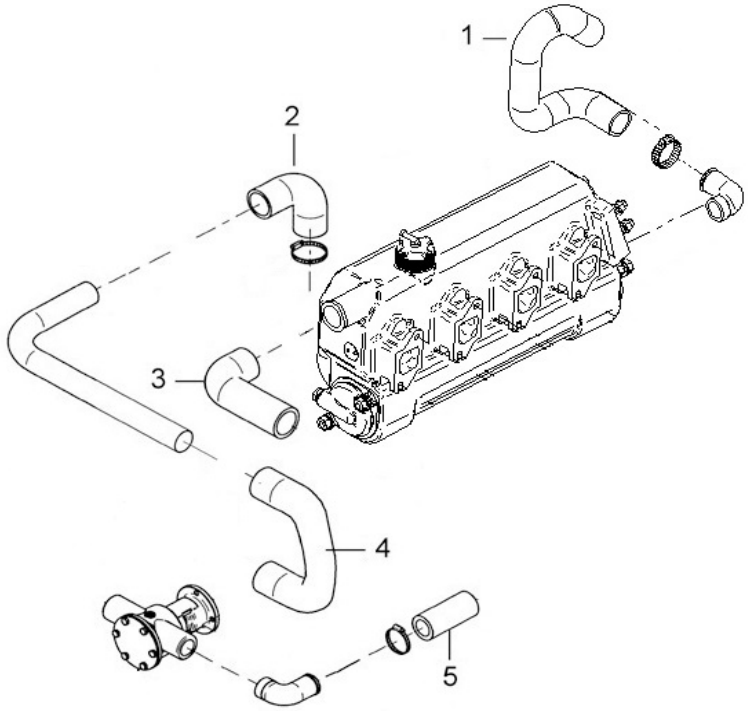

Maintenance Kit

	17820101.1		Gasket Kit		
FIG.	**REF.**	**QTY**	**DESCR.**	**FROM**	**UPTO**
1	17821004	1	Gasket,Cylinder Head		
2	17421010	1	Rocker Cover Gasket		
3	17421032	1	Gasket IN.MANIFOld		
4	17421016	1	Exhaust manifold gasket		
5	17422054	8	Seal,Valve Stem		
6	17821031	1	Gasket		

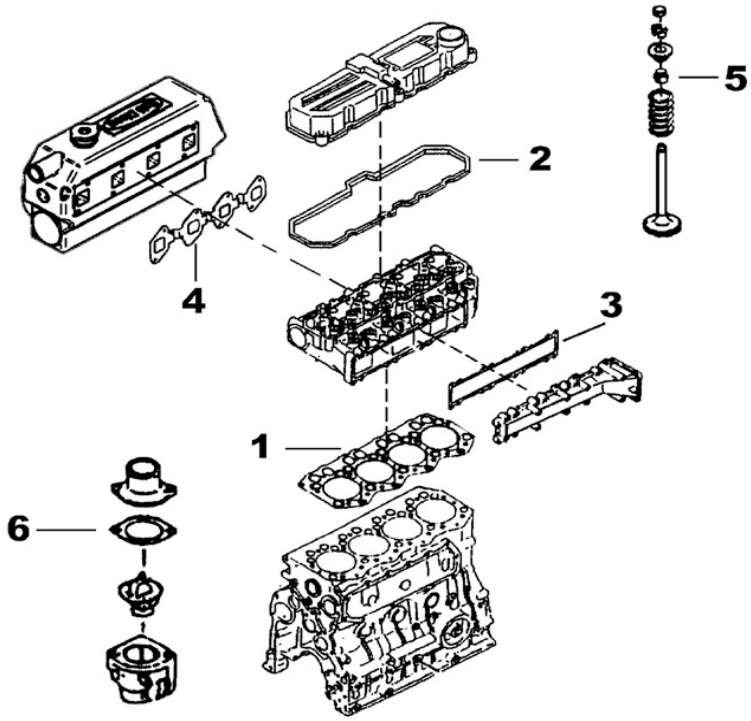

Gearbox TM-93

D_5030_1.1			Sheet 1.1/4		
FIG.	REF.	QTY	DESCR.	FROM	UPTO
100	24810103S	1	Grommet, Oil SILICON		
106	24830008	1	ROD, LEVEL Oil		
107	24810001	1	Front Body TM 93		
108	24810080	1	Plate Pipe [NP]		
109	24810081	1	ASPIRATION Tube [NP]		
110	24810082	2	Bolt DIN 933 M8-10 8.8 [NP]		
113	24810085	2	Pin		
114	24810002	1	Reverse Body TM 93		
117	24810088	1	Washer 14-20-1,5 [NP]		
118	24810011	1	Plug,oil drain		
119	24810089	1	Screw		
120	24810090	1	Cover		
125	24810214	1	Oil Grommet		
126	24810224	1	Flange, Output		
127	24810219	1	BUTT Washer		
128	24840220	1	Pin		
129	24810221	1	Washer GROWER DIN 127-14 [NP]		
130	24810222	1	Bolt DIN 933 M14X40 12.9		
131	24810095	1	Gear, ConductOR		
132	24810096	1	Gear, Conduct		
134	24810098	3	Screw		
NS	24810043	1	Pump Assy Oil [NS]		

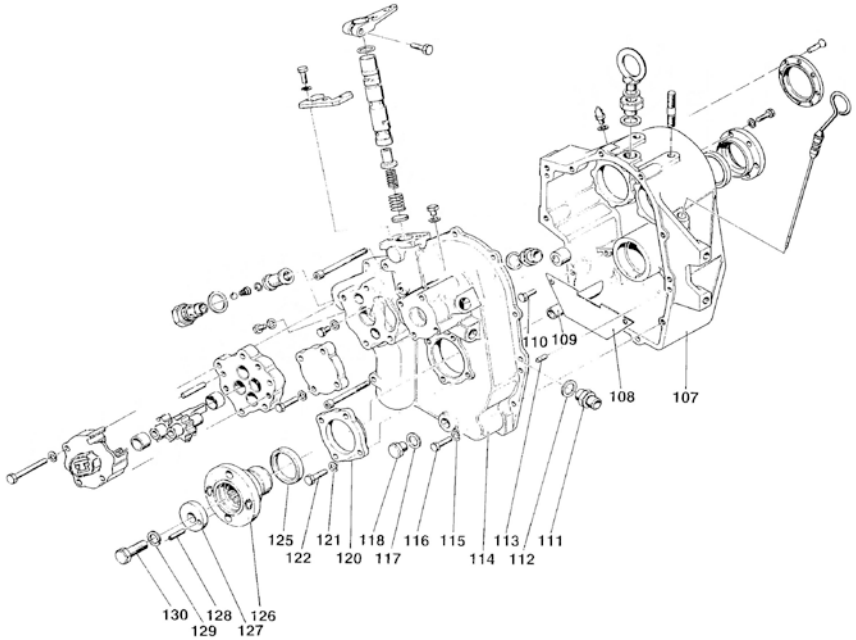

[NP] Not provided
[NS] Not shown

Gearbox TM-93

D_5030_1.2			Sheet 1.2/4		
FIG.	REF.	QTY	DESCR.	FROM	UPTO
119	24810089	1	Screw		
123	53033008	4	Washer GROWER DIN 127-8		
124	52102258	4	Bolt DIN 933 M8-25 8.8		
131	24810095	1	Gear, ConductOR		
132	24810096	1	Gear, Conduct		
58	24810013	4	Bolt DIN 931 M8-65 8.8 [NP]		
59	24810014	4	Washer GROWER DIN 127-8 [NP]		
61	24810025	2	Bushing		
63	24820023.1	2	Pin		
64	24810024	1	Plug, Oil Filter DRAIN		
67	24810027	1	Washer		
68	24810028	1	Screw		
69	18024143	1	Ball,steel 1/2"		
70	24810030	1	Valve Spring		
71	24810032	1	SNAP Ring		
72	24810035	1	Oil Filter		
73	24810036	2	Washer		
74	24810038	1	Cover		
76	24810040	1	Screw		

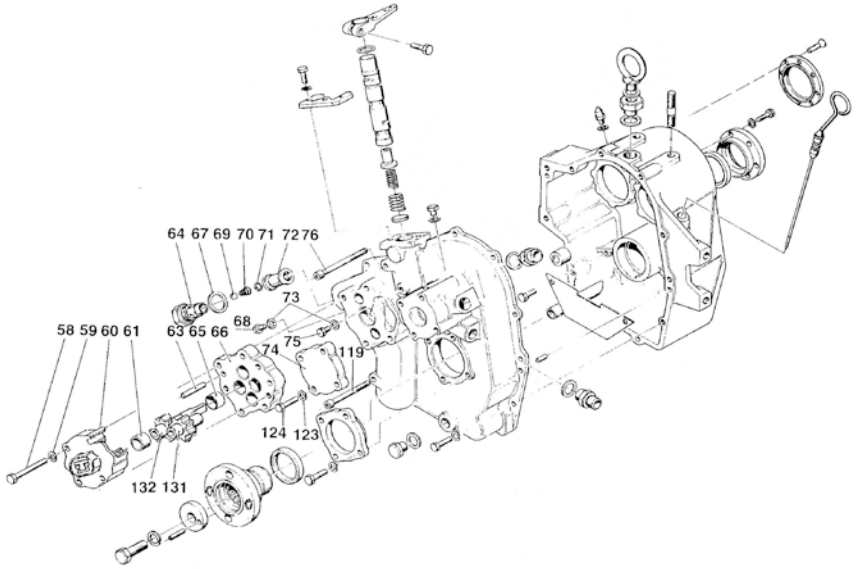

[NP] Not provided

Gearbox TM-93

D_5030_1.3			Sheet 1.3/4		
FIG.	REF.	QTY	DESCR.	FROM	UPTO
100	24810103S	1	Grommet, Oil SILICON		
101	24810072	1	Cover		
102	53033008	6	Washer GROWER DIN 127-8		
103	52102258	6	Bolt DIN 933 M8-25 8.8		
104	24810075	1	Cover		
105	24810076	8	Screw		
106	24830008	1	ROD, LEVEL Oil		
77	24810041	1	Support		
78	24810042	2	Washer GROWER DIN 127-6 [NP]		
79	24810044	2	Bolt DIN 933 M6-16 8.8 [NP]		
80	24810056	1	O-Ring D. 15,08X2,62 [NP]		
81	24810424	1	Lever		
82	24810047	1	Bolt DIN 933 M8-25 8.8 [NP]		
83	24810051	1	Distributor		
84	24810052	1	Valve		
85	24810053	1	Spring, Valve INNER		
86	24810054	1	Spring, Valve		
87	24810055	1	Expansion Plug		
88	24810028	1	Screw		
89	24810036	1	Washer		
90	24810059	1	Plane Washer		
91	24810060	1	Racord		
92	24810062	1	Valve BY PASS [NP]		
93	24810063	2	Plane Washer		
94	24810065	1	Plug		
96	24810012	1	Nut		
97	24810068	1	Plug		
98	56000083	1	Washer 21-26-1,5		
99	24810071	2	Stud		

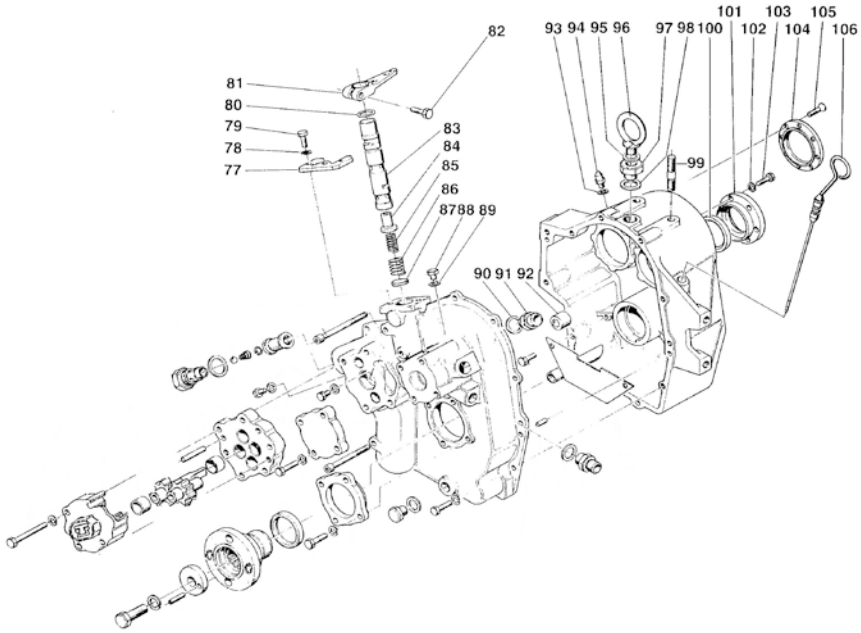

[NP] Not provided

Gearbox TM-93

D_5030_2			Intermediate Shaft 2/4		
FIG.	REF.	QTY	DESCR.	FROM	UPTO
1	24870207	1	Bearing		
2	24810307	1	Washer		
3	24810309	1	Roller		
4	24810310	1	Ring		
5A	24812302	1	Gear R. 1,5 TM 93		
5B	24813302	1	Gear R. 2 TM 93		
5C	24814302	1	Gear R. 2,4 TM 93		
5D	24815302	1	Gear R. 2,8 TM 93		
6	24810312	1	SNAP Ring		
7	24810313	1	Ring		
8	24810314	1	Grommet		
9	24810315	10	Disk		
10	24810316	9	Disk		
11	24810317	1	BushING		
12	24870118	1	THRUST RACE		
13	24810309	1	Roller		
14	24870318	1	THRUST RACE		
15	24810322	1	Spring		
16	24810323	1	Washer		
17	24810324	1	Piston		
18	24810325	1	Washer		
19	24810326	1	Plug		
20	24810301	1	INTERMEDIATE Shaft		
21	24810328	2	Washer		
22	24810329	1	KEY		
23	24810330	1	Bell		
24	24870206	1	Bearing		
25	24810333	0	Spacer [VAR]		
26	24810334	1	Plug		

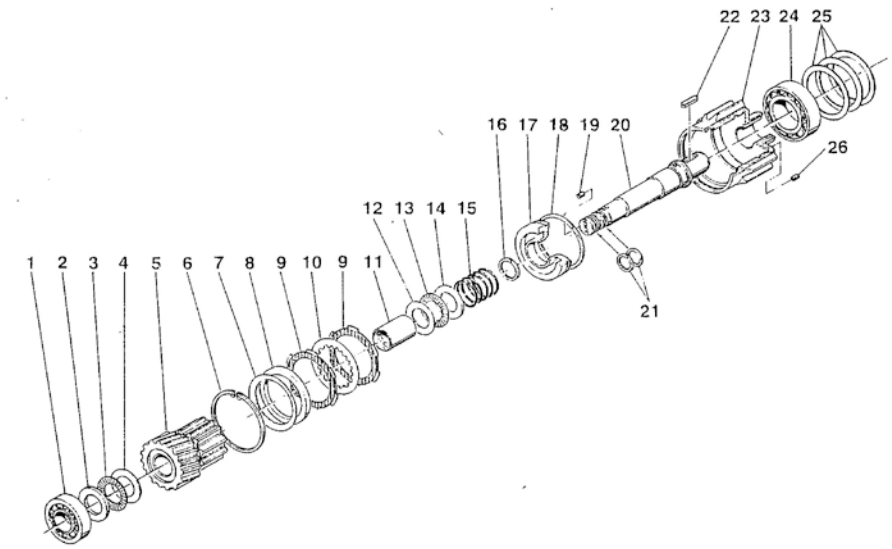

[VAR] Variable according to repair

Gearbox TM-93

D_5030_3			Input Shaft 3/4		
FIG.	REF.	QTY	DESCR.	FROM	UPTO
27	24870207	1	Bearing		
28	24810307	1	Washer		
29	24810309	1	Roller		
30	(*)	1	Not available [NP]		
31A	24812302	1	Gear R. 1,5 TM 93		
31B	24813302	1	Gear R. 2 TM 93		
31C	24814302	1	Gear R. 2,4 TM 93		
31D	24815302	1	Gear R. 2,8 TM 93		
32	24810312	1	SNAP Ring		
33	24810313	1	Ring		
34	24810314	1	Grommet		
35	24810315	10	Disk		
36	24810316	9	Disk		
37	24810317	1	BushING		
38	24870118	1	THRUST RACE		
39	24810309	1	Roller		
40	24870318	1	THRUST RACE		
41	24810322	1	Spring		
42	24810323	1	Washer		
43	24810324	1	Piston		
44	24810325	1	Washer		
45	24810328	2	Washer		
46	24810326	1	Plug		
47	24810101	1	Input Shaft		
48	24810330	1	Bell		
49	24810329	1	KEY		
50	24810334	1	Plug		
51	24870206	1	Bearing		

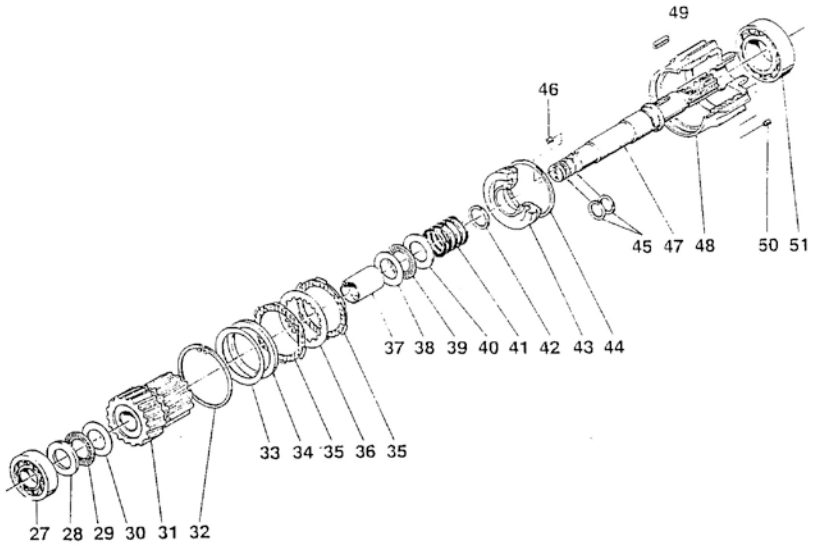

[NP] Not provided

Gearbox TM-93

D_5030_4			Output Shaft 4/4		
FIG.	REF.	QTY	DESCR.	FROM	UPTO
52	24810206	1	Conical Roller Bearing 32208		
53/55	24815201C	1	Gear+Output Shaft Kit		
53/55	24813201C	1	Gear+Output Shaft Kit		
53/55	24812201C	1	Gear+Output Shaft Kit		
53/55	24814201C	1	Gear+Output Shaft Kit		
54	24810209	1	O-Ring D. 38X3,5		
57	24810212	1	Bearing		

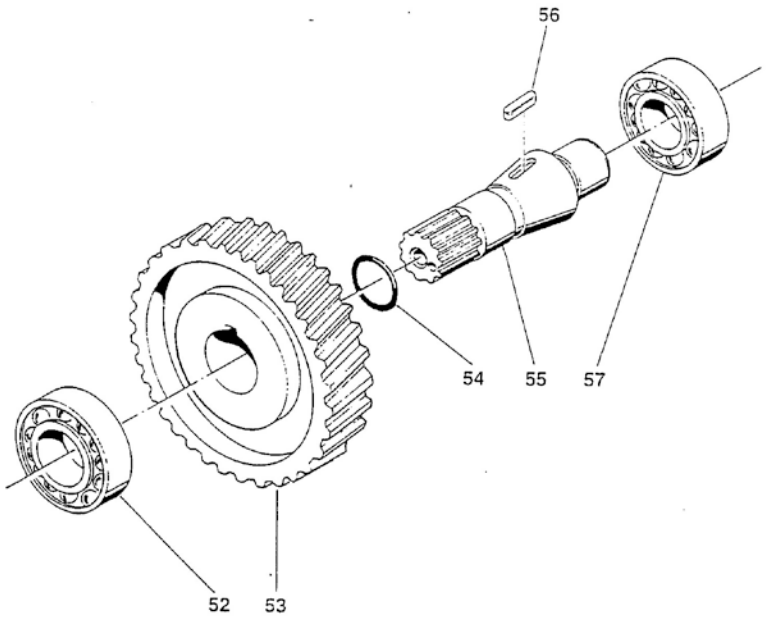

Gearbox TM-93

	D_5030_5		Maintenance Kit		
FIG.	**REF.**	**QTY**	**DESCR.**	**FROM**	**UPTO**
1	24810401	1	Kit Gasket		
2	A0105000	1	15W40 Sole Diesel Oil 5L		
3	24810403	2	Clutch Plate Kit		

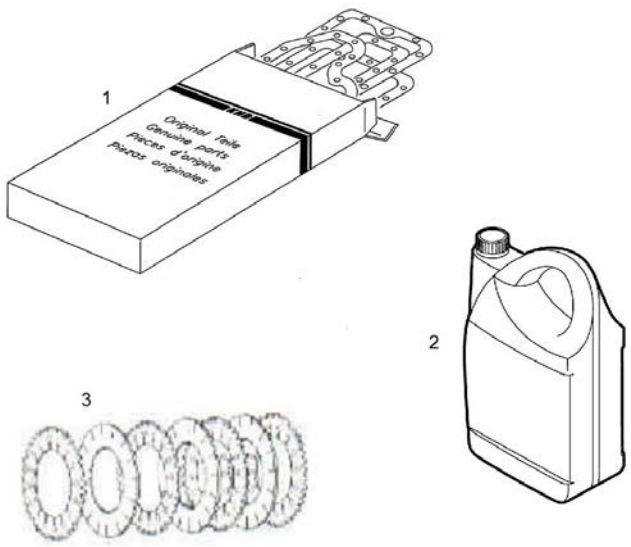

Gearbox TM-93A

D_5031_1.1			Sheet 1.1/4		
FIG.	REF.	QTY	DESCR.	FROM	UPTO
107	24810001A	1	Front Body TM 93A		
108	24810080	1	Plate Pipe [NP]		
109	24810081	1	ASPIRATION Tube [NP]		
110	24810082	2	Bolt DIN 933 M8-10 8.8 [NP]		
113	24810085	2	Pin		
114	24810002A	1	Reverse Body TM 93A		
117	24810088	1	Washer 14-20-1,5 [NP]		
118	24810011	1	Plug,oil drain		
119	24810089	1	Screw		
120	24810090	1	Cover		
125	24810214	1	Oil Grommet		
126	24810224	1	Flange, Output		
127	24810219	1	BUTT Washer		
128	24840220	1	Pin		
129	24810221	1	Washer GROWER DIN 127-14 [NP]		
130	24810222	1	Bolt DIN 933 M14X40 12.9		
131	24810095	1	Gear, ConductOR		
132	24810096	1	Gear, Conduct		
134	24810098	3	Screw		
NS	24810043	1	Pump Assy Oil [NS]		

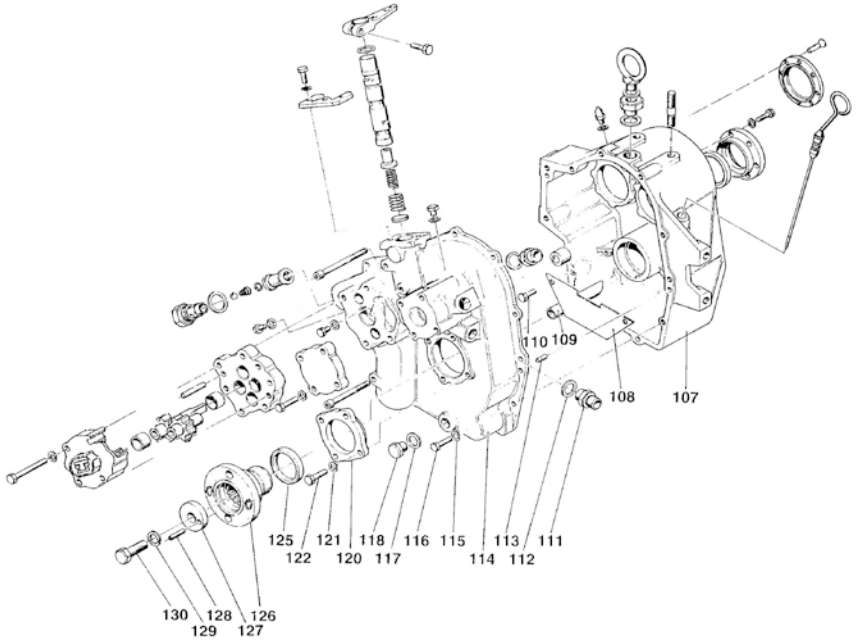

[NP] Not provided
[NS] Not shown

Gearbox TM-93A

D_5030_1.2			Sheet 1.2/4		
FIG.	REF.	QTY	DESCR.	FROM	UPTO
119	24810089	1	Screw		
123	53033008	4	Washer GROWER DIN 127-8		
124	52102258	4	Bolt DIN 933 M8-25 8.8		
131	24810095	1	Gear, ConductOR		
132	24810096	1	Gear, Conduct		
58	24810013	4	Bolt DIN 931 M8-65 8.8 [NP]		
59	24810014	4	Washer GROWER DIN 127-8 [NP]		
61	24810025	2	Bushing		
63	24820023.1	2	Pin		
64	24810024	1	Plug, Oil Filter DRAIN		
67	24810027	1	Washer		
68	24810028	1	Screw		
69	18024143	1	Ball,steel 1/2"		
70	24810030	1	Valve Spring		
71	24810032	1	SNAP Ring		
72	24810035	1	Oil Filter		
73	24810036	2	Washer		
74	24810038	1	Cover		
76	24810040	1	Screw		

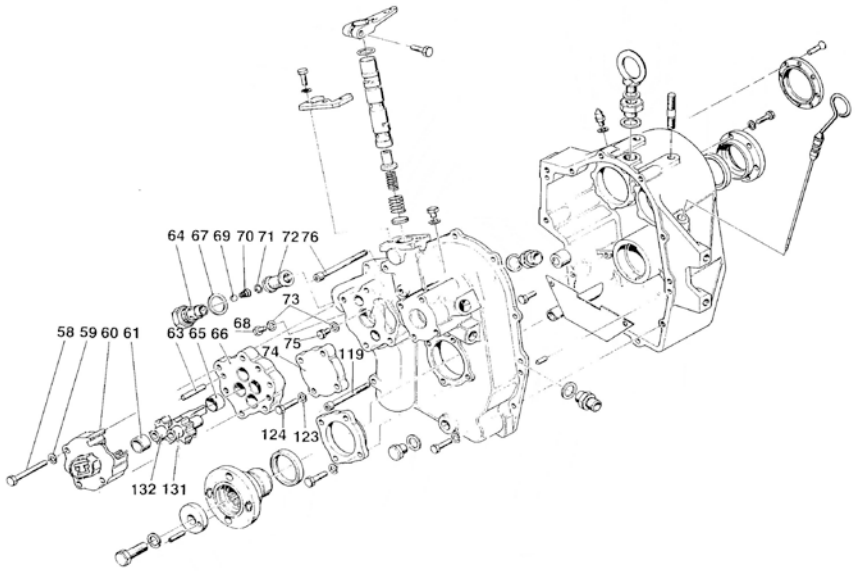

[NP] Not provided

Gearbox TM-93A

D_5030_1.3			Sheet 1.3/4		
FIG.	REF.	QTY	DESCR.	FROM	UPTO
100	24810103S	1	Grommet, Oil SILICON		
101	24810072	1	Cover		
102	53033008	6	Washer GROWER DIN 127-8		
103	52102258	6	Bolt DIN 933 M8-25 8.8		
104	24810075	1	Cover		
105	24810076	8	Screw		
106	24830008	1	ROD, LEVEL Oil		
77	24810041	1	Support		
78	24810042	2	Washer GROWER DIN 127-6 [NP]		
79	24810044	2	Bolt DIN 933 M6-16 8.8 [NP]		
80	24810056	1	O-Ring D. 15,08X2,62 [NP]		
81	24810424	1	Lever		
82	24810047	1	Bolt DIN 933 M8-25 8.8 [NP]		
83	24810051	1	Distributor		
84	24810052	1	Valve		
85	24810053	1	Spring, Valve INNER		
86	24810054	1	Spring, Valve		
87	24810055	1	Expansion Plug		
88	24810028	1	Screw		
89	24810036	1	Washer		
90	24810059	1	Plane Washer		
91	24810060	1	Racord		
92	24810062	1	Valve BY PASS [NP]		
93	24810063	2	Plane Washer		
94	24810065	1	Plug		
96	24810012	1	Nut		
97	24810068	1	Plug		
98	56000083	1	Washer 21-26-1,5		
99	24810071	2	Stud		

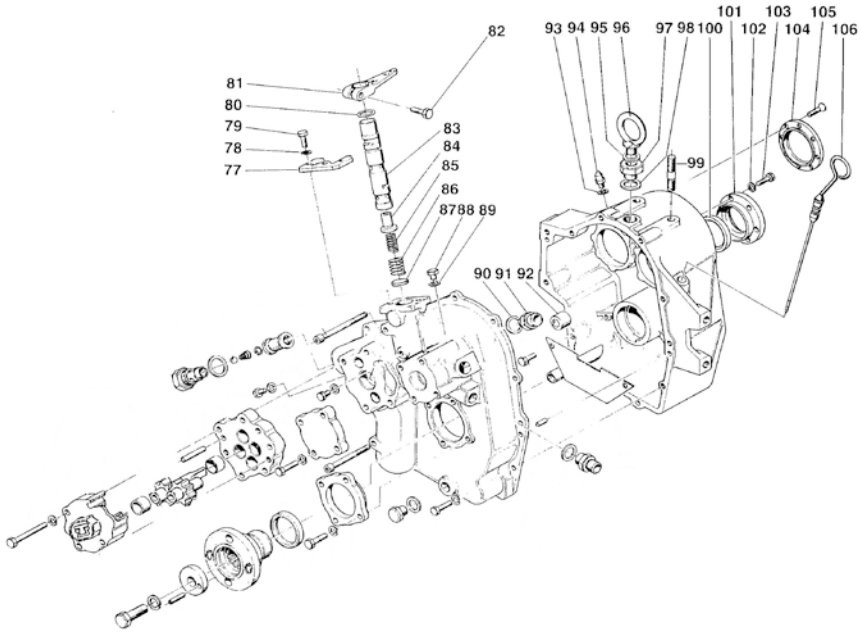

[NP] Not provided

Gearbox TM-93A

D_5031_2			Intermediate Shaft 2/4		
FIG.	REF.	QTY	DESCR.	FROM	UPTO
1	24870207	1	Bearing		
2	24810307	1	Washer		
3	24810309	1	Roller		
4	24810310	1	Ring		
5	24814302A	1	Gear R. 2,4 TM 93A		
5	24812302A	1	Gear R. 1,5 TM 93A		
5	24813302A	1	Gear Red. 2 TM 93A		
6	24810312	1	SNAP Ring		
7	24810313	1	Ring		
8	24810314	1	Grommet		
9	24810315	10	Disk		
10	24810316	9	Disk		
11	24810317	1	BushING		
12	24870118	1	THRUST RACE		
13	24810309	1	Roller		
14	24870318	1	THRUST RACE		
15	24810322	1	Spring		
16	24810323	1	Washer		
17	24810324	1	Piston		
18	24810325	1	Washer		
19	24810326	1	Plug		
20	24810301	1	INTERMEDIATE Shaft		
21	24810328	2	Washer		
22	24810329	1	KEY		
23	24810330	1	Bell		
24	24870206	1	Bearing		
25	24810333	0	Spacer [VAR]		
26	24810334	1	Plug		

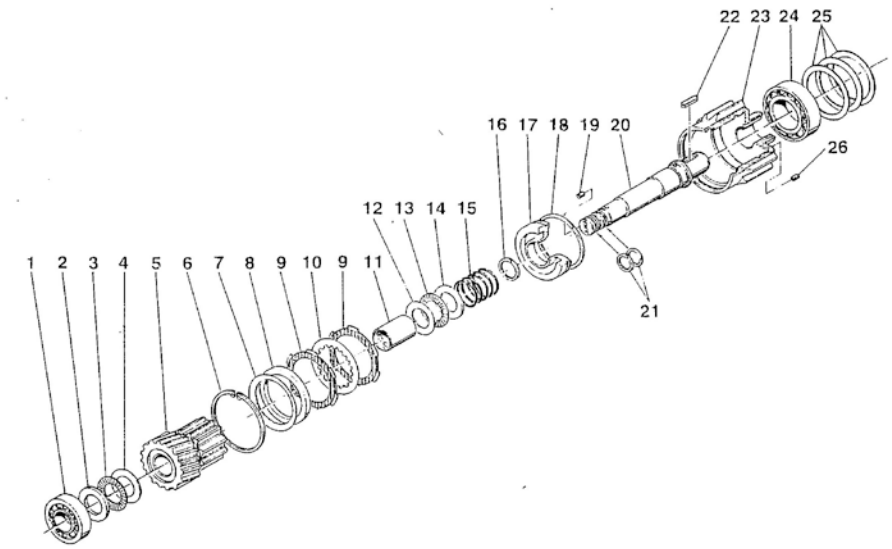

[VAR] Variable according to repair

Gearbox TM-93A

	D_5031_3		Input Shaft 3/4		
FIG.	REF.	QTY	DESCR.	FROM	UPTO
27	24870207	1	Bearing		
28	24810307	1	Washer		
29	24810309	1	Roller		
30	(*)	1	Not available [NP]		
31	24813302	1	Gear R. 2 TM 93		
31	24814302	1	Gear R. 2,4 TM 93		
31	24812302	1	Gear R. 1,5 TM 93		
32	24810312	1	SNAP Ring		
33	24810313	1	Ring		
34	24810314	1	Grommet		
35	24810315	10	Disk		
36	24810316	9	Disk		
37	24810317	1	BushING		
38	24870118	1	THRUST RACE		
39	24810309	1	Roller		
40	24870318	1	THRUST RACE		
41	24810322	1	Spring		
42	24810323	1	Washer		
43	24810324	1	Piston		
44	24810325	1	Washer		
45	24810328	2	Washer		
46	24810326	1	Plug		
47	24810101	1	Input Shaft		
48	24810330	1	Bell		
49	24810329	1	KEY		
50	24810334	1	Plug		
51	24870206	1	Bearing		

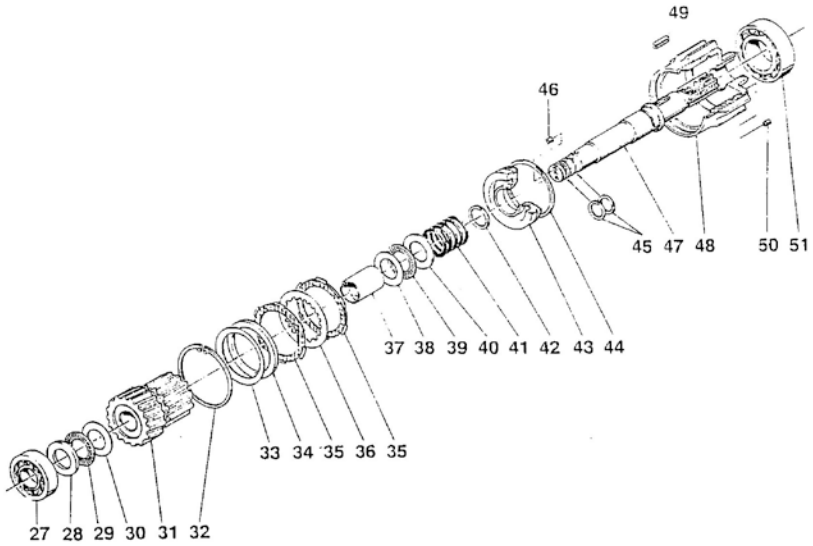

[NP] Not provided

Gearbox TM-93A

D_5031_4			Output Shaft 4/4		
FIG.	REF.	QTY	DESCR.	FROM	UPTO
52	24810206	1	Conical Roller Bearing 32208		
53/55	24814201AC	1	Gear+Output Shaft Kit		
53/55	24812201AC	1	Gear+Output Shaft Kit		
53/55	24813201AC	1	Gear+Output Shaft Kit		
54	24810209	1	O-Ring D. 38X3,5		
57	24810212	1	Bearing		

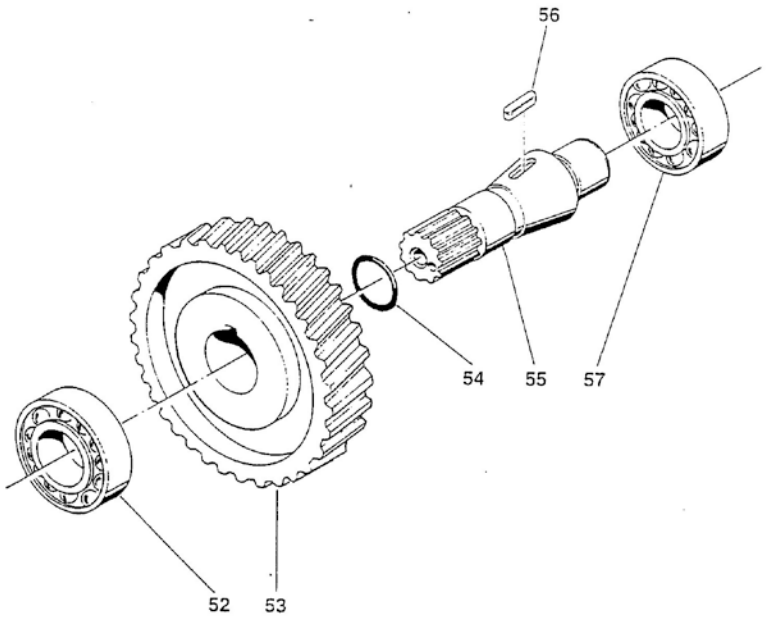

Gearbox TM-93A

	D_5030_5		Maintenance Kit		
FIG.	**REF.**	**QTY**	**DESCR.**	**FROM**	**UPTO**
1	24810401	1	Kit Gasket		
2	A0105000	1	15W40 Sole Diesel Oil 5L		
3	24810403	2	Clutch Plate Kit		

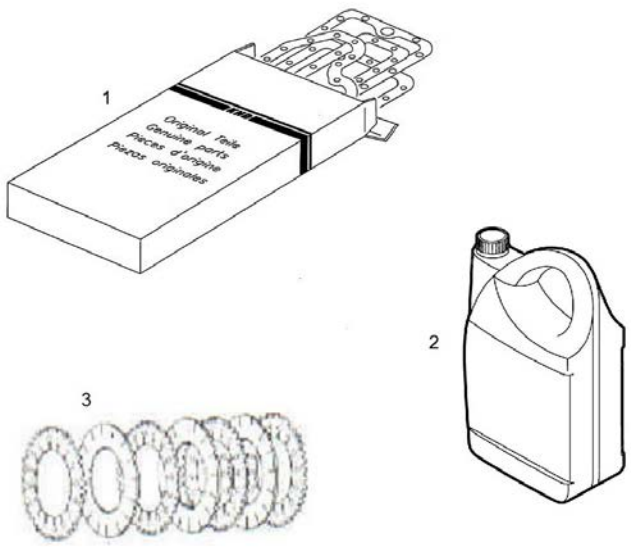

Gearbox TM-170

D_5027_1.1			Sheet 1.1/4		
FIG.	REF.	QTY	DESCR.	FROM	UPTO
1	24820090	2	Pin		
2	24816080	1	Plate Pipe		
3	24810082	2	Bolt DIN 933 M8-10 8.8 [NP]		
4	24820001	1	Front Body TM 170		
5	24810047	6	Bolt DIN 933 M8-25 8.8 [NP]		
6	24810014	6	Washer GROWER DIN 127-8 [NP]		
7	24820072	1	Cover Input Shaft		
8	24820103	1	Oil Grommet		
9	24810065	1	Plug		
10	24820005.1	1	NAME Plate		
11	24810071	2	Stud		
12	56000083	1	Washer 21-26-1,5		
13	24810012	1	Nut		
14	24810063	1	Plane Washer		
15	24810068	1	Plug		
16	24810008	1	ROD, Oil LEVEL		
17	24820071	2	Stud		
18	24820002	1	Reverse Body TM 170		
19	24810059	1	Plane Washer		
20	24810060	1	Racord		
21	24810062	1	Valve BY PASS [NP]		
22	24820086	1	Washer 8-13-1,5 [NP]		
23	24830105	1	Plug		
24	24820102	1	Cover, REAR		

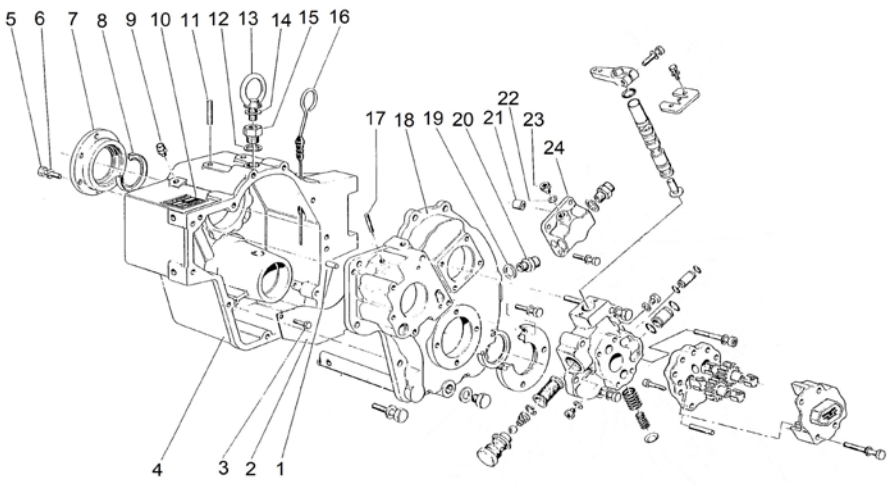

[NP] Not provided

Gearbox TM-170

D_5026_1.2			Sheet 1.2/4		
FIG.	REF.	QTY	DESCR.	FROM	UPTO
25	24810013	4	Bolt DIN 931 M8-65 8.8 [NP]		
26	24820015.1	1	Oil Pump Body		
27	24820025.1	3	Bolt DIN 912 M6-25 8.8 [NP]		
28	24810025	4	Bushing		
29	24810096	1	Gear, Conduct		
30	24820023.1	2	Pin		
31	24820026	1	Distributor Cap		
32	24810055	1	Expansion Plug		
33	24816054	1	Spring, Valve		
34	24820098	2	Bolt DIN 912 M10-50 8.8 [NP]		
35	24810035	1	Oil Filter		
36	24810032	1	SNAP Ring		
37	24810030	1	Valve Spring		
38	18024143	1	Ball,steel 1/2"		
39	24810027	1	Washer		
40	24810024	1	Plug, Oil Filter DRAIN		
41	24820208	1	Cover Front		
42	24820214	1	Grommet		
43	24810011	1	Plug,oil drain		
44	24810088	1	Washer 14-20-1,5 [NP]		
45	52101314	1	Bolt DIN 931 M10-55 8.8		
46	24816081	1	Aspiration Tube TM 880A		
NS	24820013	2	Bolt DIN 912 M10-30 8.8 [NP] [NS]		
NS	24810026.1	3	Cover [NS]		
NS	24820090	2	Pin [NS]		
NS	52103311	9	Bolt DIN 912 M10-40 8.8 [NS]		

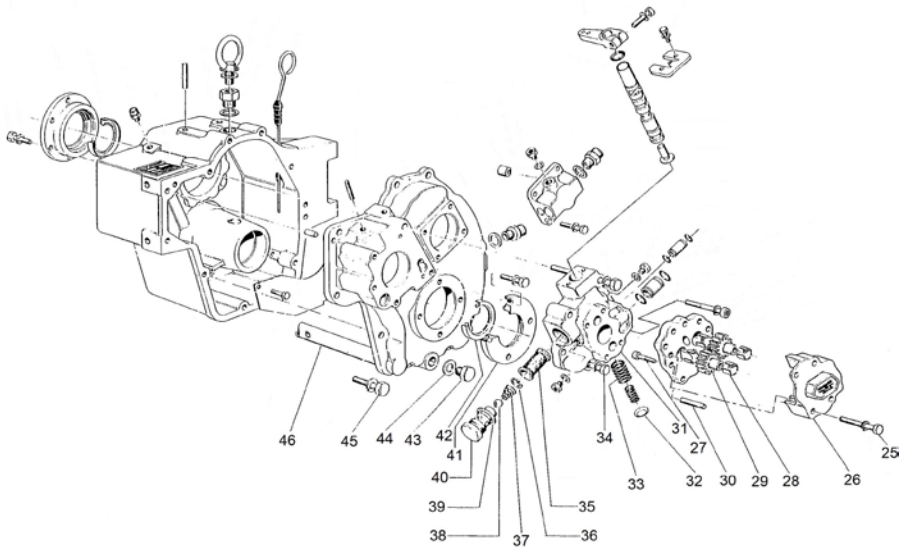

[NP] Not provided
[NS] Not shown

Gearbox TM-170

D_5026_1.3			Sheet 1.3/4		
FIG.	REF.	QTY	DESCR.	FROM	UPTO
47	24820062	2	Tube, Racord		
48	24820063	2	O-Ring D. 15X1,7		
49	24820013	2	Bolt DIN 912 M10-30 8.8 [NP]		
50	24810026.1	3	Cover		
51	24810095	3	Gear, ConductOR		
52	24810056	1	O-Ring D. 15,08X2,62 [NP]		
54	24810044	2	Bolt DIN 933 M6-16 8.8 [NP]		
55	24810042	2	Washer GROWER DIN 127-6 [NP]		
56	24810041	1	Support		
57	24810051	1	Distributor		
58	24810052	1	Valve		
59	24820075	4	Washer GROWER DIN 127-10 [NP]		
60	24820076	4	Bolt DIN 933 M10-30 8.8 [NP]		
61	24820087	1	Bolt DIN 931 M10-130 8.8 [NP]		
62	24820060	1	Tube, Racord		
63	24820059	2	O-Ring D. 10X1,7		
82	24810424	1	Lever		
NS	56000083	1	Washer 21-26-1,5 [NS]		
NS	24820102	1	Cover, REAR [NS]		
NS	24830105	1	Plug [NS]		
NS	24820103	1	Oil Grommet [NS]		

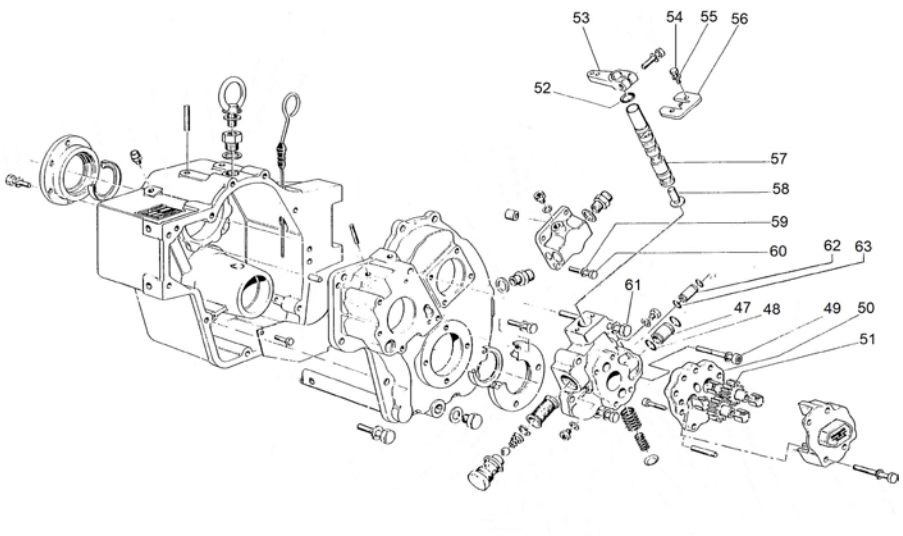

[NP] Not provided
[NS] Not shown

Gearbox TM-170

	D_5027_2		Input Shaft 2/4		
FIG.	REF.	QTY	DESCR.	FROM	UPTO
1	24820134	1	Conical Roller Bearing 32011-JR		
2	24810334	1	Plug		
3	24820130	1	Bell		
4	24820125	1	Washer		
5	24820124	1	Piston		
6	24820115	9	Disk		
7	24820116	8	Disk		
8	24810211	1	KEY		
9	24820126	1	Washer		
10	24820101	1	Input Shaft		
11	24810328	2	Washer		
12	24810326	1	Plug		
13	24820122	1	Spring		
14	24820123	1	Bearing		
141	24810333	0	Spacer [VAR]		
15	24820113	1	Grommet		
16	24820129	1	Ring		
17	24820128	1	SNAP Ring		
18A	24822302	1	Gear R. 1,50 TM 170		
18B	24823302	1	Gear R. 2,04 TM 170		
18C	24824302	1	Gear R. 2.50 TM 170		
18D	24825302	1	Gear Red. 2,94 TM 170		
19	24820117	1	Bushing		
20	24820118	1	Ring		
21	24820121	1	Roller Bearing AXK-4060		
22	24820105	1	Washer		
23	24820104	1	Conical Roller Bearing 32307		

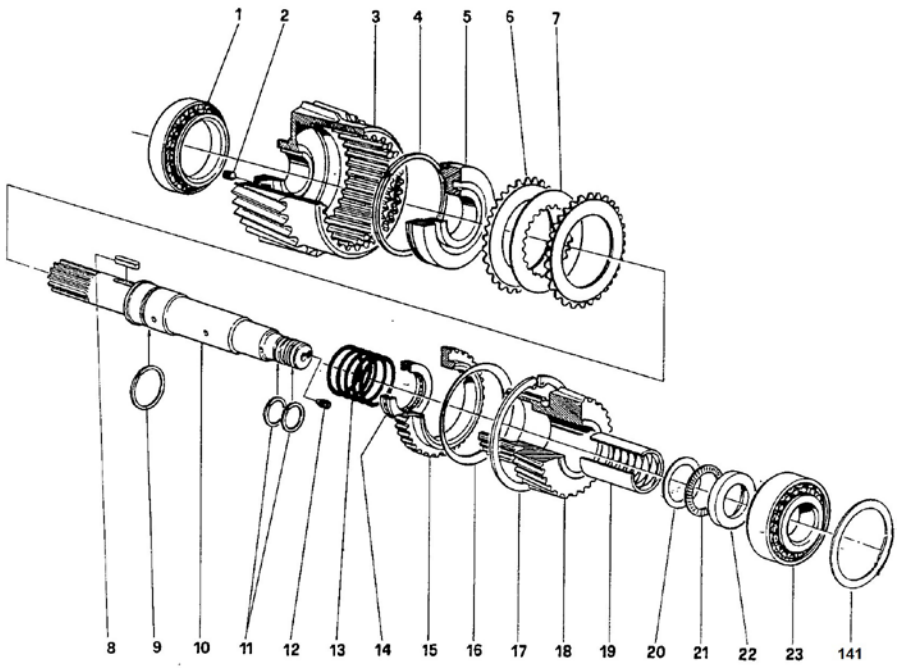

[VAR] Variable according to repair

Gearbox TM-170

D_5027_3			Intermediate Shaft 3/4		
FIG.	REF.	QTY	DESCR.	FROM	UPTO
141	24810333	0	Spacer [VAR]		
24	24820134	1	Conical Roller Bearing 32011-JR		
25	24810334	1	Plug		
26	24820330	1	Bell		
27	24820125	1	Washer		
28	24820124	1	Piston		
29	24820115	9	Disk		
30	24820116	8	Disk		
31	24810211	1	KEY		
32	24820126	1	Washer		
33	24820301	1	INTERMEDIATE Shaft		
34	24810328	2	Washer		
35	24810326	1	Plug		
36	24820122	1	Spring		
37	24820123	1	Bearing		
38	24820113	1	Grommet		
39	24820129	1	Ring		
40	24820128	1	SNAP Ring		
41A	24822302	1	Gear R. 1,50 TM 170		
41B	24823302	1	Gear R. 2,04 TM 170		
41C	24824302	1	Gear R. 2.50 TM 170		
41D	24825302	1	Gear Red. 2,94 TM 170		
42	24820117	1	Bushing		
43	24820118	1	Ring		
44	24820121	1	Roller Bearing AXK-4060		
45	24820105	1	Washer		
46	24820104	1	Conical Roller Bearing 32307		

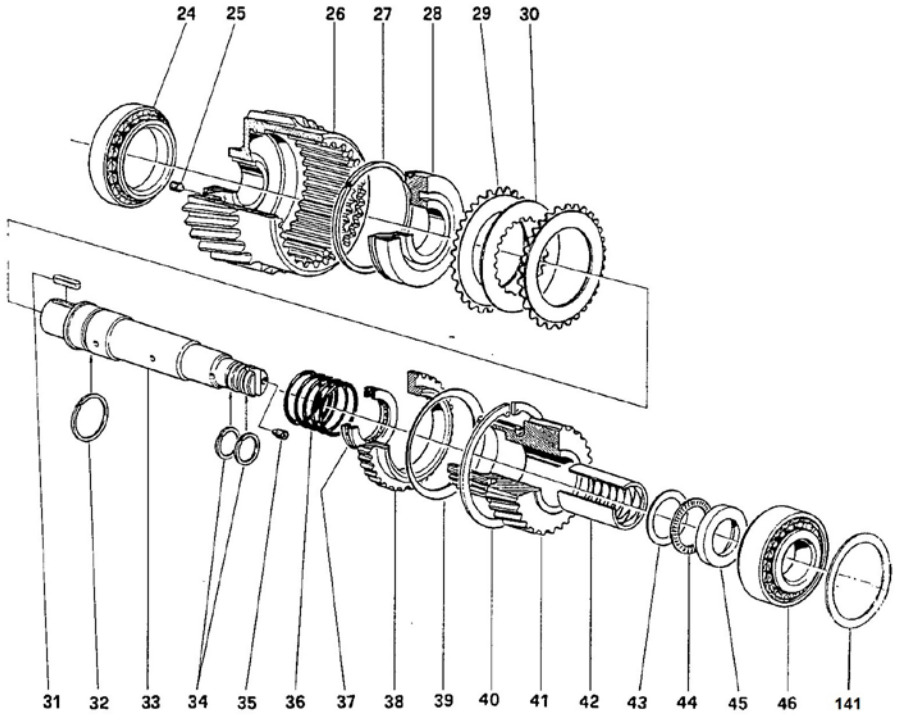

[VAR] Variable according to repair

Gearbox TM-170

	D_5027_4		Output Shaft 4/4		
FIG.	REF.	QTY	DESCR.	FROM	UPTO
140	24820333.1	0	Shim [VAR]		
47	24820206	1	Conical Roller Bearing 33210		
49/50	24824201C	1	Gear+Output Shaft Kit+Spacer		
49/50	24823201C	1	Gear+Output Shaft Kit+Spacer		
49/50	24825201C	1	Gear+Output Shaft Kit+Spacer		
49/50	24822201C	1	Gear+Output Shaft Kit+Spacer		
51	24820209	1	Spacer, Output Shaft		
52	24820212	1	Conical Roller Bearing 30210-J2/Q		
53	24820224	1	Flange, Output		
54	24820225	1	O-Ring D. 45X3,5		
55	24820219	1	BUTT Washer		
56	24820220	1	Pin		
57	24820221	1	1 [NP]		
58	24820222.1	1	Screw		

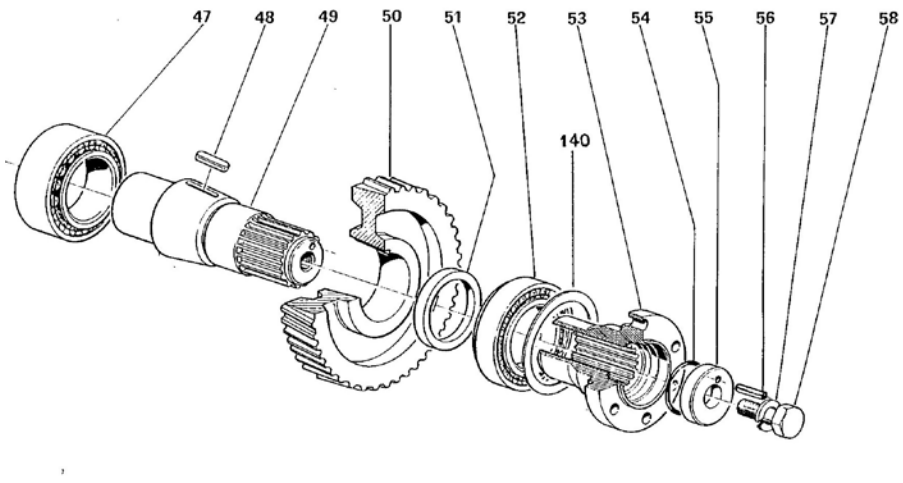

[NP] Not provided

[VAR] Variable according to repair

Gearbox TM-170

	D_5027_5		Maintenance Kit		
FIG.	**REF.**	**QTY**	**DESCR.**	**FROM**	**UPTO**
1	24820401	1	Kit Gasket		
2	A0105000	1	15W40 Sole Diesel Oil 5L		
3	24820403	2	Clutch Plate Kit		

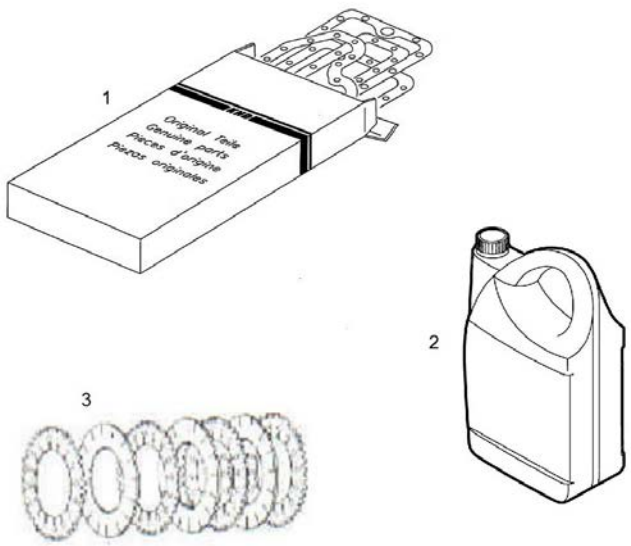

TM-345 Gearbox

D_5023_1			Sheet 1/4		
FIG.	REF.	QTY	DESCR.	FROM	UPTO
1	24850091	1	Screw		
2	24850092	3	Washer		
3	24850090	2	Washer		
4	24820068	3	Plug M8X1		
5	24820086	3	Washer 8-13-1,5 [NP]		
6	24810065	1	Plug		
7	24850008	1	Gauge Oil LEVEL		
26	24850028	11	Screw		
41	24810044	5	Bolt DIN 933 M6-16 8.8 [NP]		
56	24850005	1	Plate, IDENTIFICATION		
59	24810063	1	Plane Washer		
60	24850011	1	Plug,oil drain		
61	24850040	2	Bolt DIN 933 M6-25 8.8 [NP]		
62	24810047	1	Bolt DIN 933 M8-25 8.8 [NP]		
77	24810532	1	SWITCHER		
78	24810533	1	O-Ring D. 14X1,7		
79	24850527	1	Pin		

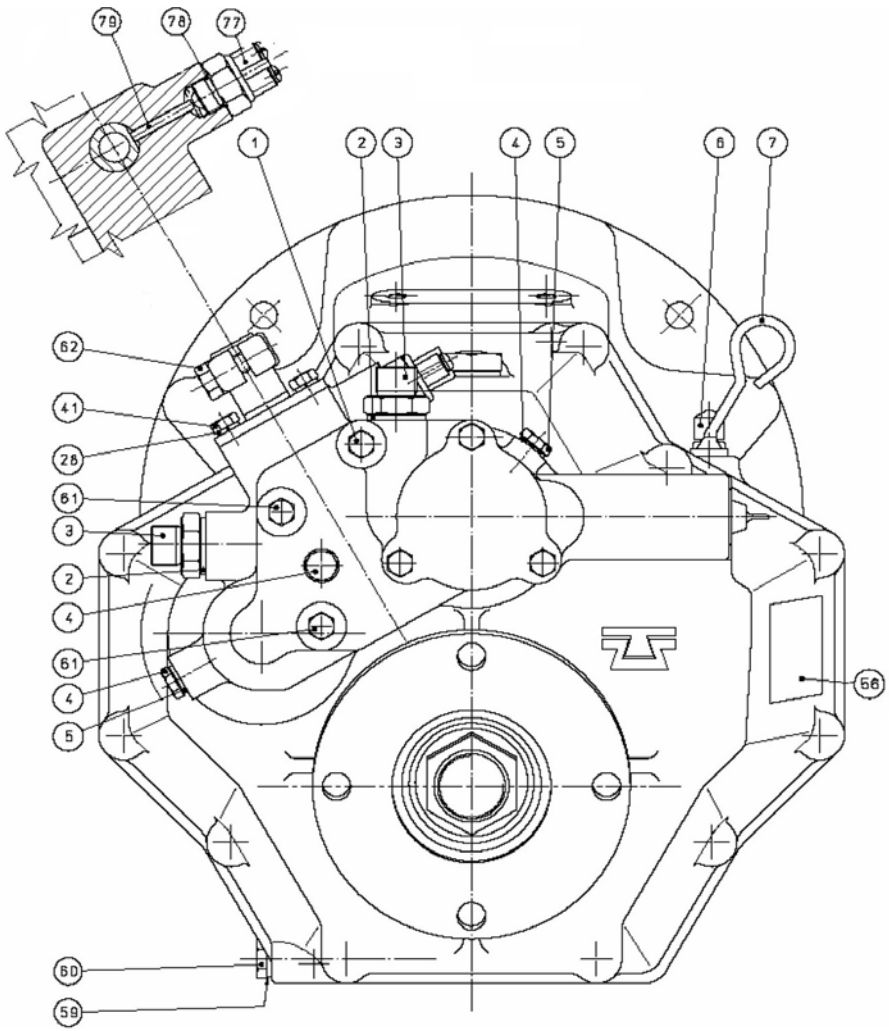

[NP] Not provided

TM-345 Gearbox

D_5023_2			Sheet 2/4		
FIG.	**REF.**	**QTY**	**DESCR.**	**FROM**	**UPTO**
33	24830113	1	Screw		

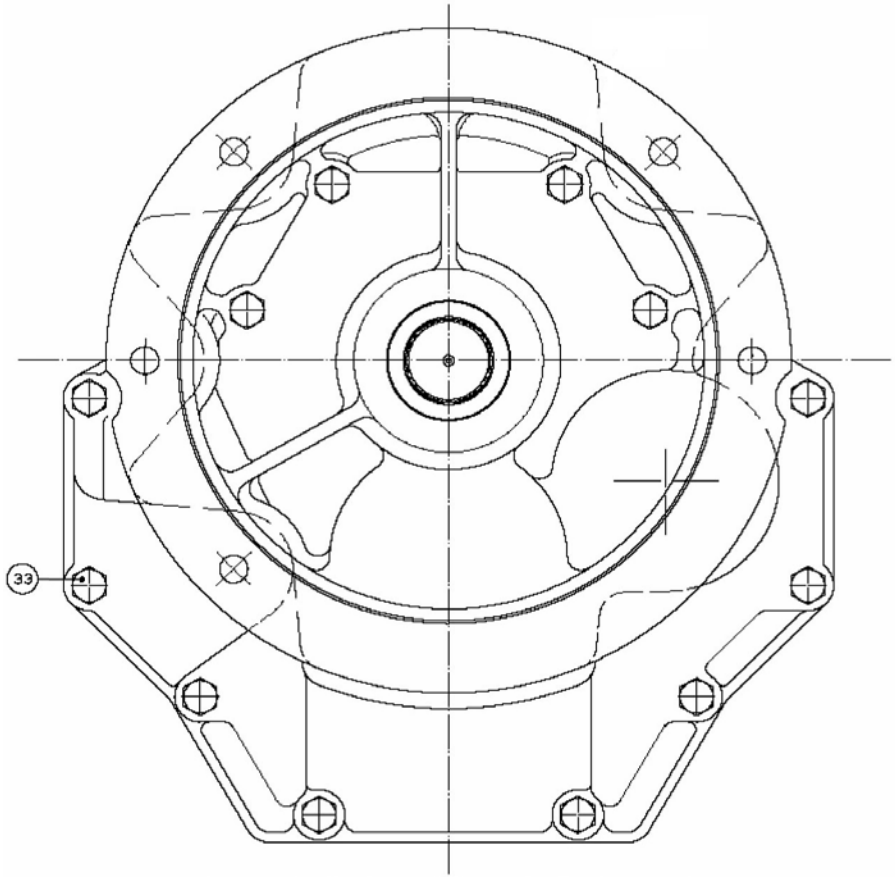

TM-345 Gearbox

	D_5023_3		Sheet 3/4		
FIG.	**REF.**	**QTY**	**DESCR.**	**FROM**	**UPTO**
8	24850323	2	Washer		
9-10	24850403	2	Clutch Plate Kit		
11	24850310	2	Ring		
12	24850307	2	Ring		
13	24850333	2	Spacer		
14	24850312	2	SEGER		
15A	24852203	1	Gear R. 1,54 TM 345		
15B	24853203	1	Gear R. 2 TM 345		
15C	24854203	1	Gear R. 2,47 TM 345		
16	24850012	1	Plug		
17	24850318	4	Ring		
18	24850306	4	Bearing, needle		
19	24850325	2	Washer		
20	24850308	2	Conical Roller Bearing 32305		
21	24850328	4	Washer		
22	24810326	2	Plug		
23	24850016	1	Bushing		
24	24850020	1	PUMB Box		
25	24850015	1	Pump Cover		
27	24850029	3	Screw		
28	24810042	9	Washer GROWER DIN 127-6 [NP]		
29	24850095	1	Gear, Pump Out		
30	24850094	1	Pump Shaft		
31	24850096	1	Gear, Pump INNER		
32	24850097	1	O-Ring D. 50X1,7		
34	24850099	1	Nut		
35	24850224A	1	Flange, Output TM-345A		
36	24840103	1	Grommet		
37	24850212	1	Conical Roller Bearing 30207A		
38	24850001A	1	Front Body TM-345A		
39A	24852210	1	Gear R. 1,54 TM 345		
39B	24853210	1	Gear R. 2 TM 345		
39C	24854210	1	Gear R. 2,47 TM 345		
40	24850013	2	Pin		
42	24850080	1	Plate Pipe		

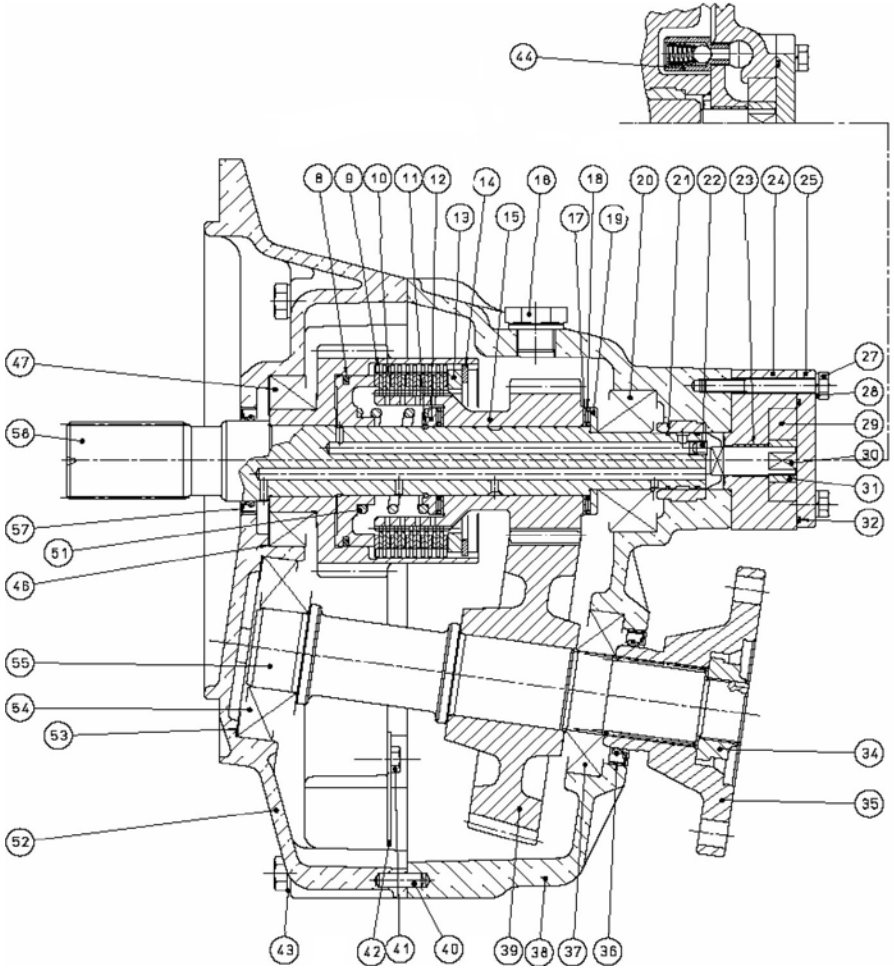

[NP] Not provided

TM-345 Gearbox

	D_5023_3		Sheet 3/4		
FIG.	**REF.**	**QTY**	**DESCR.**	**FROM**	**UPTO**
43	24850093	12	Washer		
44	24850063	1	By pass Valve		
46	24850108	6	Shim Adjusting		
47	24850104	2	Conical Roller Bearing 32009-X		
51	24850122	2	Spring		
52	24850207A	1	Cover TM-345A		
53	24810333	3	Spacer		
54	24850206	1	Conical Roller Bearing 31307A		
55	24850201	1	Output Shaft		
57	24810103S	1	Grommet, Oil SILICON		
58	24850101	1	Input Shaft		

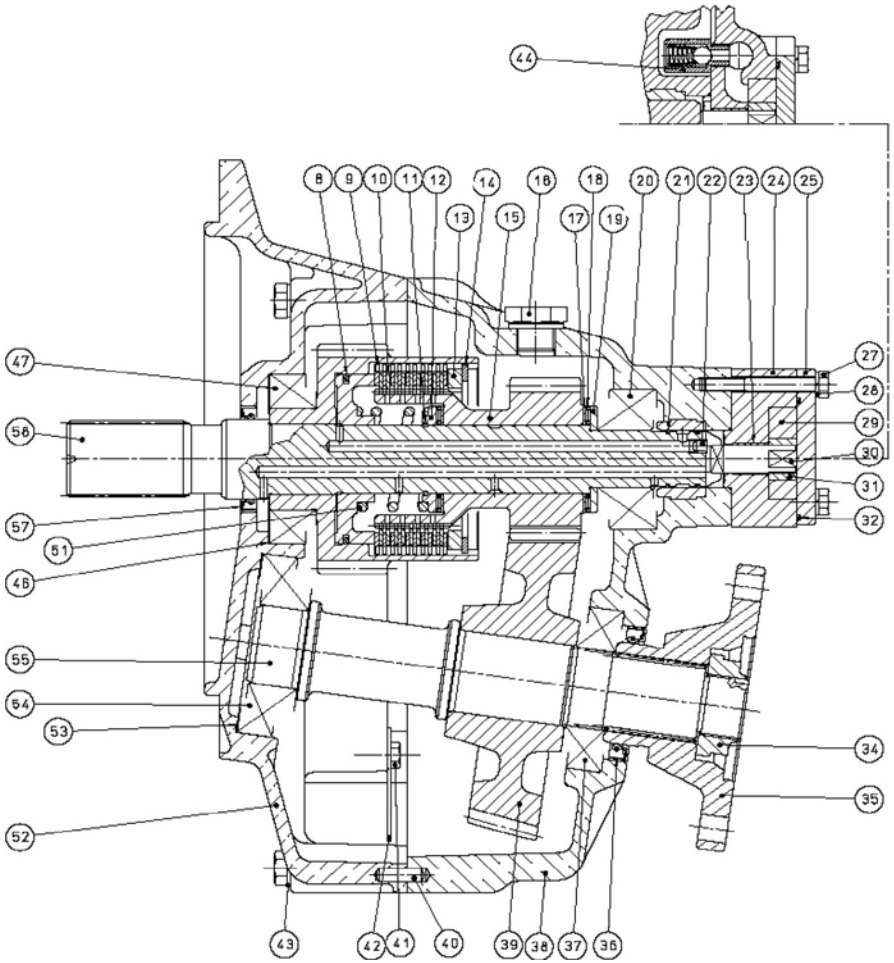

TM-345 Gearbox

	D_5023_4		Sheet 4/4		
FIG.	**REF.**	**QTY**	**DESCR.**	**FROM**	**UPTO**
45A	24852203	1	Gear R. 1,54 TM 345		
45B	24853203	1	Gear R. 2 TM 345		
45C	24854203	1	Gear R. 2,47 TM 345		
48	24850124	2	Piston		
49	24850301	1	INTERMEDIATE Shaft		
50	24850330	1	Bell		
63	24810056	2	O-Ring D. 15,08X2,62 [NP]		
64	24850081	1	Aspiration Tube		
65	24810035	1	Oil Filter		
66	24850085	1	Pin		
67	24850059	1	O-Ring D. 50X5,3		
68	24850076	1	Spacer		
69	24850057	1	Nut		
70	24850030	1	Spring		
71	24810424	1	Lever		
72	24810041	1	Support		
73	24850062	1	Selector Valve		
74	24850052	1	Valve		
75	24850078	1	Spring		
76	24850079	1	Screw		

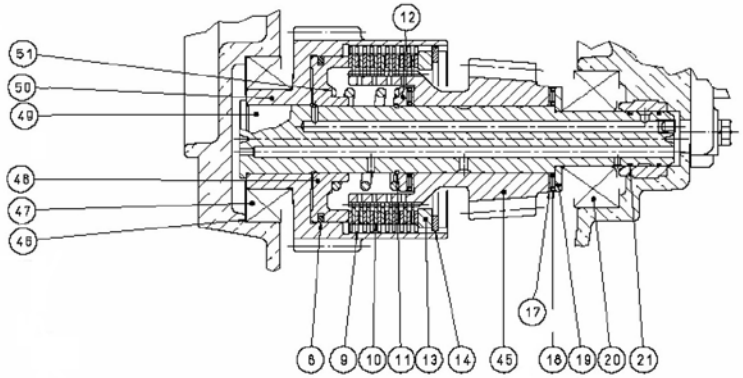

INTERMEDIATE SHAFT ASSEMBLY

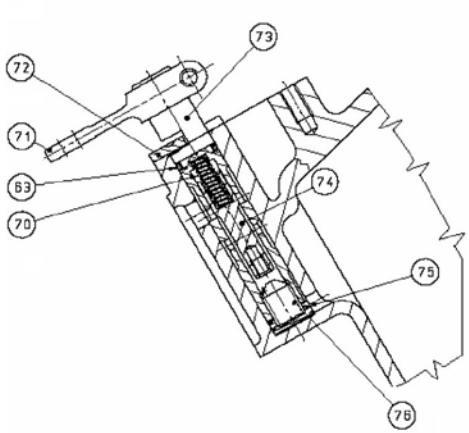

SELECTOR VALVE ASSEMBLY

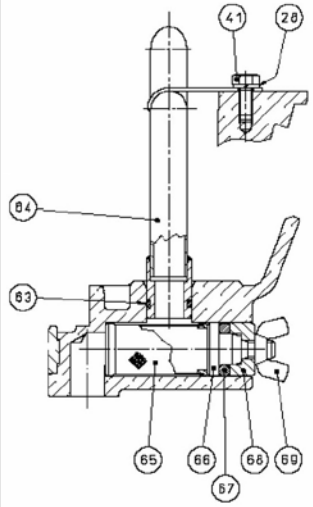

OIL FILTER ASSEMBLY

[NP] Not provided

TM-345 Gearbox

	D_5023_5		Maintenance Kit		
FIG.	**REF.**	**QTY**	**DESCR.**	**FROM**	**UPTO**
1	24850401	1	Kit Gasket		
2	A0105000	1	15W40 Sole Diesel Oil 5L		
3	24850403	2	Clutch Plate Kit		

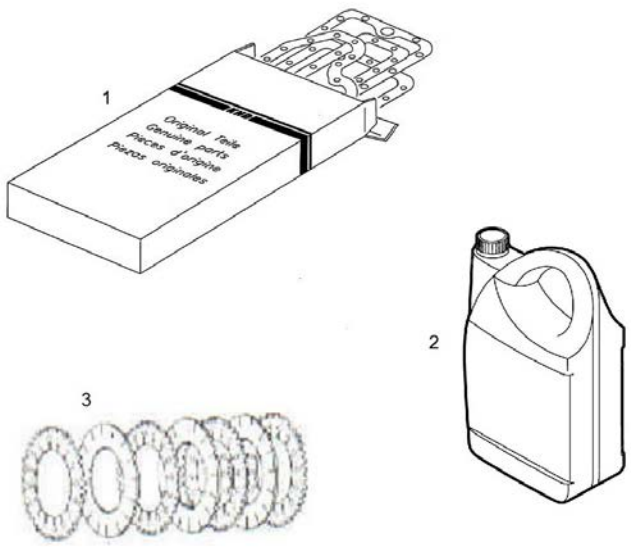

TM-345A Gearbox

D_5024_1			Sheet 1/4		
FIG.	REF.	QTY	DESCR.	FROM	UPTO
1	24850091	1	Screw		
2	24850092	3	Washer		
3	24850090	2	Washer		
4	24820068	3	Plug M8X1		
5	24820086	3	Washer 8-13-1,5 [NP]		
6	24810065	1	Plug		
7	24850008	1	Gauge Oil LEVEL		
26	24850028	11	Screw		
41	24810044	5	Bolt DIN 933 M6-16 8.8 [NP]		
56	24850005	1	Plate, IDENTIFICATION		
59	24810063	1	Plane Washer		
60	24850011	1	Plug,oil drain		
61	24850040	2	Bolt DIN 933 M6-25 8.8 [NP]		
62	24810047	1	Bolt DIN 933 M8-25 8.8 [NP]		
77	24810532	1	SWITCHER		
78	24810533	1	O-Ring D. 14X1,7		
79	24850527	1	Pin		

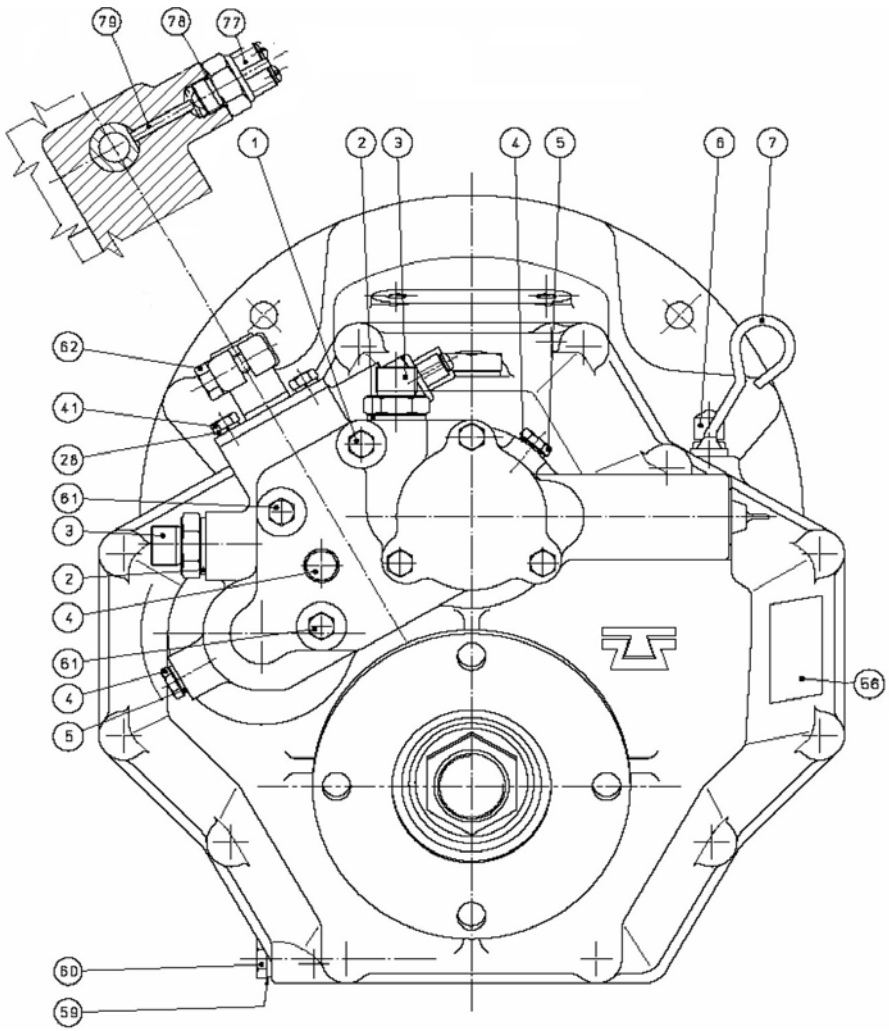

[NP] Not provided

TM-345A Gearbox

	D_5024_2		Sheet 2/4		
FIG.	**REF.**	**QTY**	**DESCR.**	**FROM**	**UPTO**
33	24830113	1	Screw		

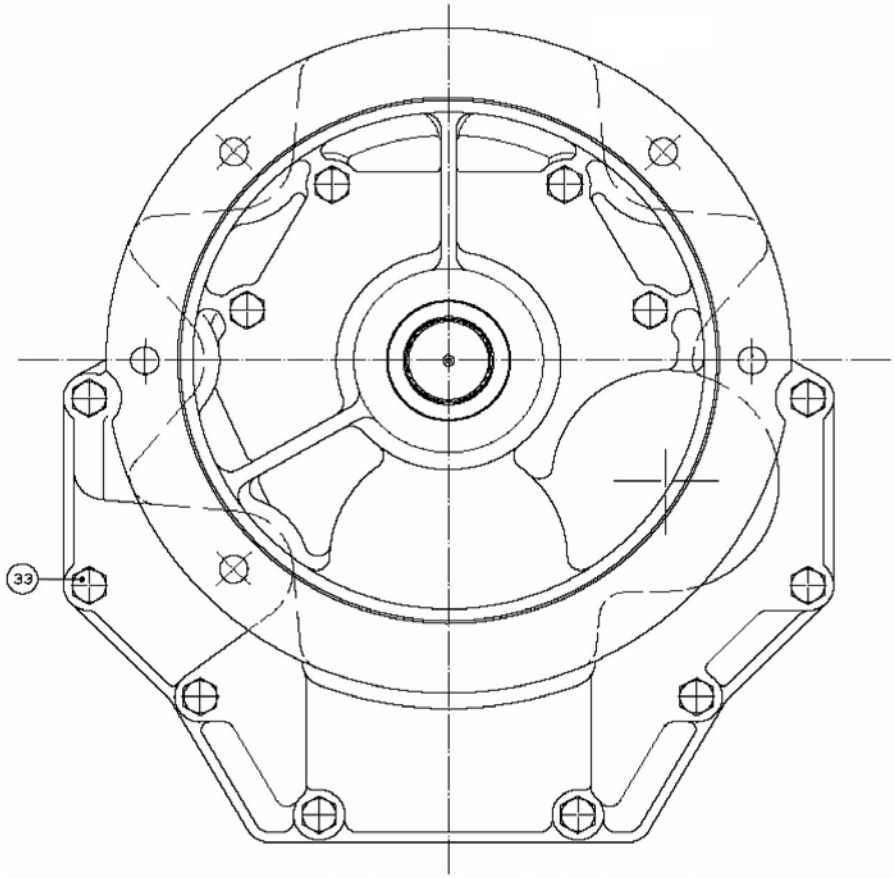

TM-345A Gearbox

	D_5024_3		Sheet 3/4		
FIG.	REF.	QTY	DESCR.	FROM	UPTO
8	24850323	2	Washer		
11	24850310	2	Ring		
12	24850307	2	Ring		
13	24850333	2	Spacer		
14	24850312	2	SEGER		
15A	24852203A	1	Gear R. 1,54 TM 345A		
15B	24853203A	1	Gear Red. 2 TM 345A		
15C	24854203A	1	Gear R. 2,47 TM 345A		
16	24850012	1	Plug		
17	24850318	4	Ring		
18	24850306	4	Bearing, needle		
19	24850325	2	Washer		
20	24850308	2	Conical Roller Bearing 32305		
21	24850328	4	Washer		
22	24810326	2	Plug		
23	24850016	1	Bushing		
24	24850020	1	PUMB Box		
25	24850015	1	Pump Cover		
27	24850029	3	Screw		
28	24810042	9	Washer GROWER DIN 127-6 [NP]		
29	24850095	1	Gear, Pump Out		
30	24850094	1	Pump Shaft		
31	24850096	1	Gear, Pump INNER		
32	24850097	1	O-Ring D. 50X1,7		
34	24850099	1	Nut		
35	24850224A	1	Flange, Output TM-345A		
36	24840103	1	Grommet		
37	24850212	1	Conical Roller Bearing 30207A		
38	24850001A	1	Front Body TM-345A		
39A	24852210A	1	Gear R. 1,54 TM 345A		
39B	24853210A	1	Gear R. 2 TM 345A		
39C	24854210A	1	Gear R. 2,47 TM 345A		
40	24850013	2	Pin		
42	24850080	1	Plate Pipe		
43	24850093	12	Washer		

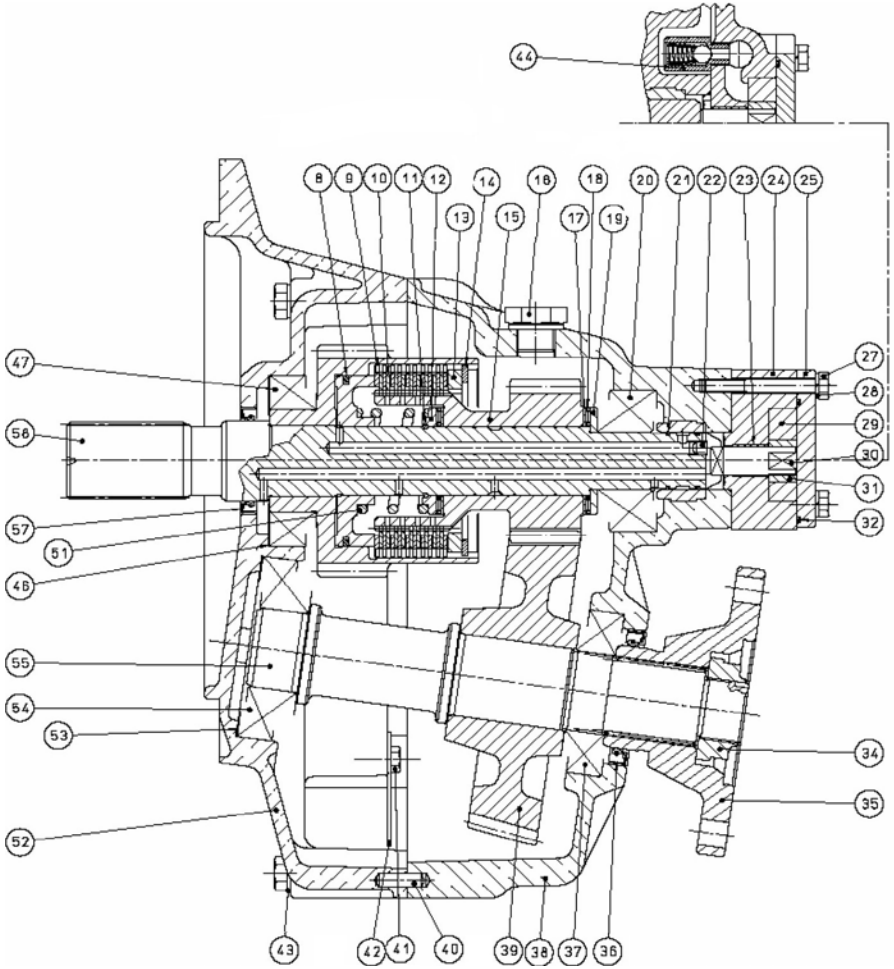

[NP] Not provided

TM-345A Gearbox

	D_5024_3		Sheet 3/4		
FIG.	**REF.**	**QTY**	**DESCR.**	**FROM**	**UPTO**
44	24850063	1	By pass Valve		
46	24850108	6	Shim Adjusting		
47	24850104	2	Conical Roller Bearing 32009-X		
51	24850122	2	Spring		
52	24850207A	1	Cover TM-345A		
53	24810333	3	Spacer		
54	24850206	1	Conical Roller Bearing 31307A		
55	24850201	1	Output Shaft		
57	24810103S	1	Grommet, Oil SILICON		
58	24850101	1	Input Shaft		

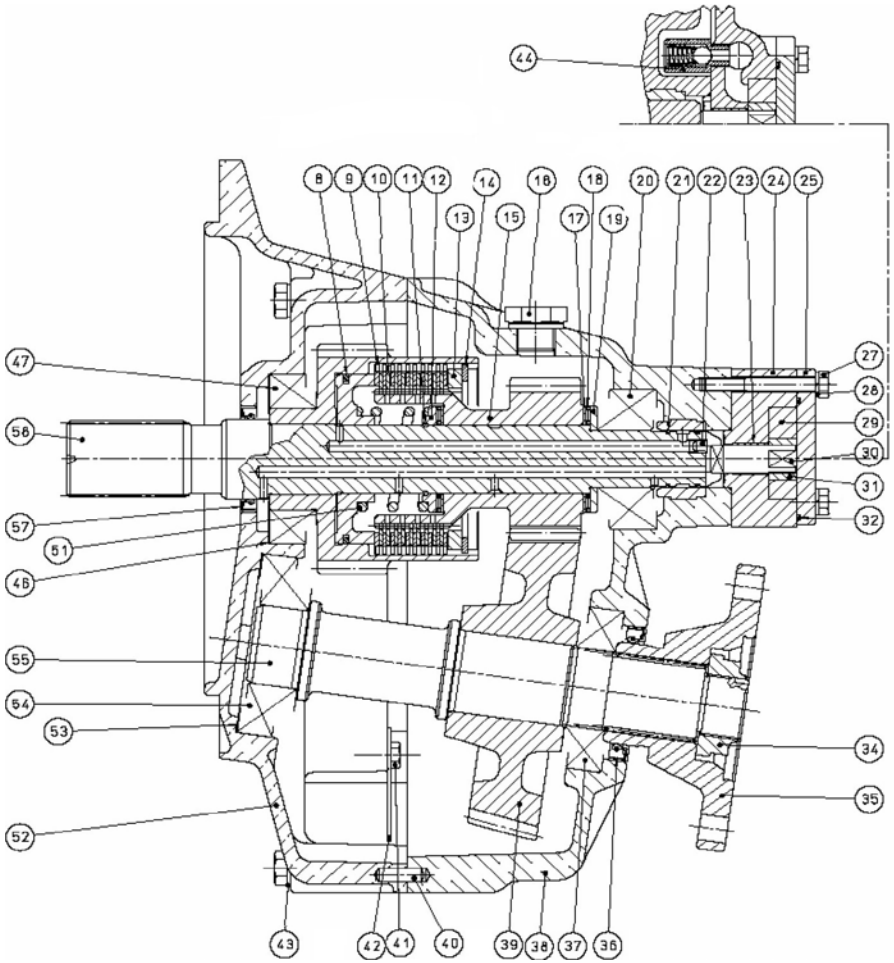

TM-345A Gearbox

	D_5024_4		Sheet 4/4		
FIG.	**REF.**	**QTY**	**DESCR.**	**FROM**	**UPTO**
45A	24852302	1	Gear R. 1,54 TM 345A		
45B	24853302	1	Gear R. 2 TM 345A		
45C	24854302	1	Gear R. 2,47 TM 345A		
48	24850124	2	Piston		
49	24850301	1	INTERMEDIATE Shaft		
50	24850330	1	Bell		
63	24810056	2	O-Ring D. 15,08X2,62 [NP]		
64	24850081	1	Aspiration Tube		
65	24810035	1	Oil Filter		
66	24850085	1	Pin		
67	24850059	1	O-Ring D. 50X5,3		
68	24850076	1	Spacer		
69	24850057	1	Nut		
70	24850030	1	Spring		
71	24810424	1	Lever		
72	24810041	1	Support		
73	24850062	1	Selector Valve		
74	24850052	1	Valve		
75	24850078	1	Spring		
76	24850079	1	Screw		

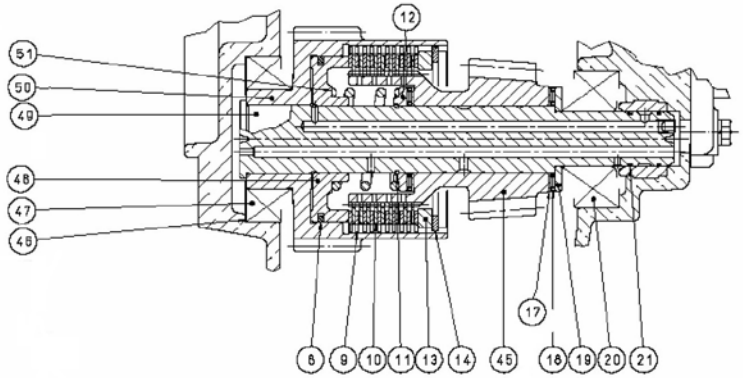

INTERMEDIATE SHAFT ASSEMBLY

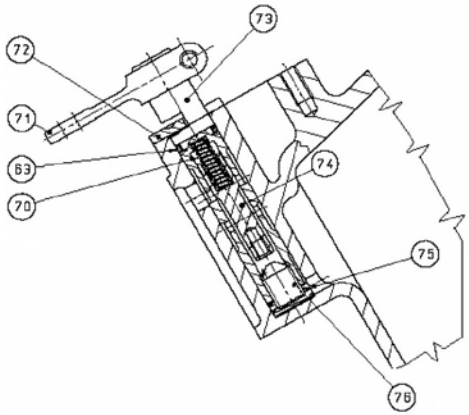

SELECTOR VALVE ASSEMBLY

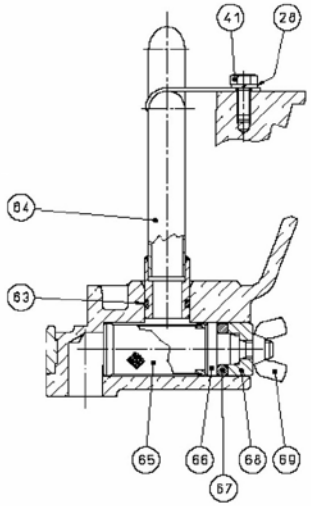

OIL FILTER ASSEMBLY

[NP] Not provided

TM-345A Gearbox

	D_5023_5		Maintenance Kit		
FIG.	**REF.**	**QTY**	**DESCR.**	**FROM**	**UPTO**
1	24850401	1	Kit Gasket		
2	A0105000	1	15W40 Sole Diesel Oil 5L		
3	24850403	2	Clutch Plate Kit		

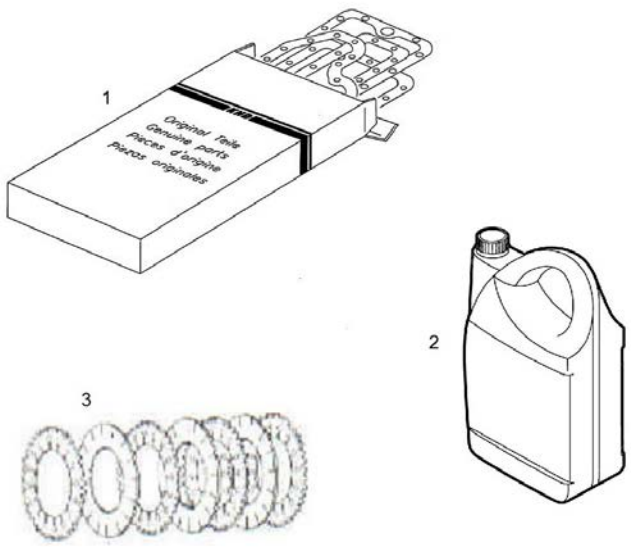

GearBox ZF-63 IV

	D_50Z3_1		Sheet 1/2		
FIG.	**REF.**	**QTY**	**DESCR.**	**FROM**	**UPTO**
1	24640001	1	Housing		
2A	24640002	1	Breather valve		
2B	24642001	1	Hunger breather valve		
3	24610036	2	Plug		
4A	24640004	1	Output shaft seal		
4B	24642002	1	Output shaft seal		
5	24640005	1	Plug		
6A	24640006	1	Suction pipe		
6B	24640007	1	Suction pipe with support		
7	24640008	1	Retainer support		
8	24640009	1	Hex head screw		
9	24640010	1	Filter cover, assy.		
11	24640011	1	O-Ring		
12	24640012	1	O-Ring		
13	24610413	1	Washer		
14	24640014	1	Screw M8x30		
16	24613352	1	Filter Assy,oil		
19	24640018	1	Oilfilter		
20	24640019	1	Gasket		
21A	24640020	1	Oildipstick		
21B	24640021	1	Oildipstick + OR		
22	24640022	1	O-Ring		
23	24640023	1	Cover (housing)		
24	24640024	2	Locator pin		
25	24640025	4	Hex head screw		
26	24640026	16	Washer		
27	24640027	11	Hex head screw		
28	24640028	1	Hex head screw		
29	24640029	1	Input shaft seal		
30A	24640030	1	Output shaft seal		
30B	24642003	1	Output shaft seal		
31	24640031	1	Name plate		

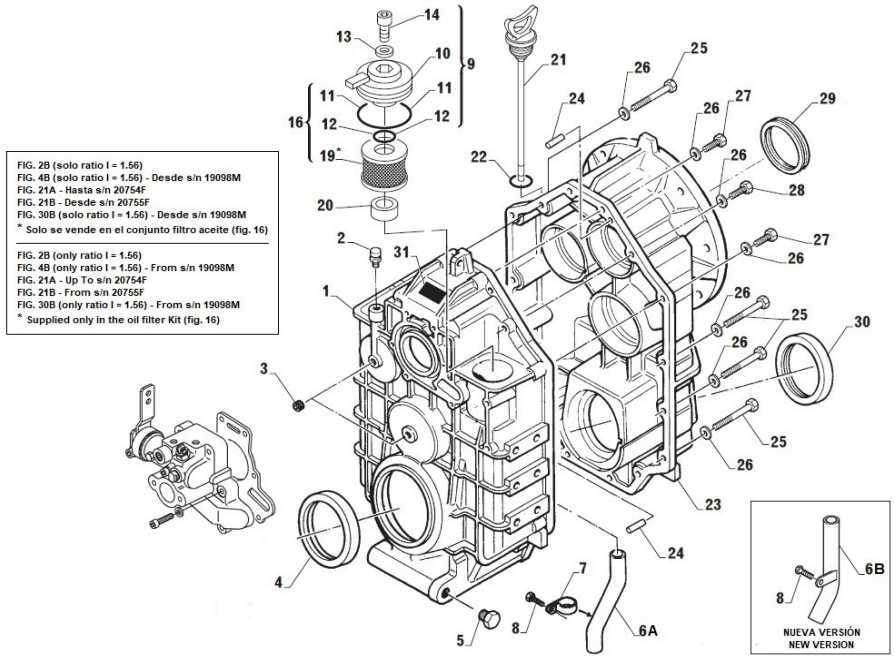

GearBox ZF-63 IV

	D_50Z3_2		Sheet 2/2		
FIG.	**REF.**	**QTY**	**DESCR.**	**FROM**	**UPTO**
1	24640034	1	Flange		
2	24640035	8	Screw		
3	24640201	4	Locator pin		
4	24640101	3	Piston ring		
5	24640102	1	Tapered roller bearing		
6	24640103	2	Butting ring		
7	24640104	1	Reverse gear Z3=49		
8	24640105	4	Needle bearing		
9	24640106	1	Key		
10	24640107	1	Input shaft, assy.		
11	24640108	2	Snap ring		
12	24640109	2	End disc		
13	24640110	10	Outer clutch disc		
14	24640111	8	Inner clutch disc		
15	24640112	2	Retainer ring		
16A	24640113	6	Cup spring		
16B	24640114	6	Cup spring		
17	24640115	2	Inner clutch piston ring		
18	24640116	2	Clutch piston		
19	24640117	2	Ball		
20	24640118	2	Outer clutch piston ring		
21	24640119	1	Input shaft and clutch housing		
22	24640120	2	Tapered roller bearing		
23A	24640121	2	Shim 0.1 mm		
23B	24640122	2	Shim 0.15 mm		
23C	24640301	2	Shim 0.2 mm		
23D	24640302	2	Shim 0.5 mm		
24	24640303	1	Tapered roller bearing		
25	24640304	1	Tapered roller bearing		
27	24640306	1	Tapered roller bearing		
28A	24640307	2	Shim 0.1 mm		
28B	24640308	2	Shim 0.15 mm		
28C	24640309	2	Shim 0.3 mm		
28D	24640310	2	Shim 0.5 mm		
29	24640202	1	Tapered roller bearing		

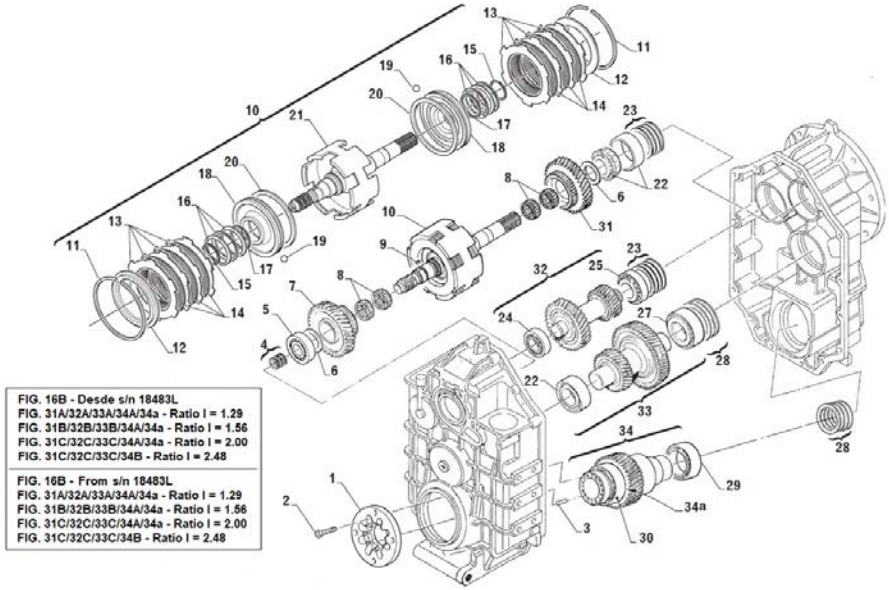

GearBox ZF-63 IV

	D_50Z3_2		Sheet 2/2		
FIG.	**REF.**	**QTY**	**DESCR.**	**FROM**	**UPTO**
30	24640203	1	Tapered roller bearing		
31A	24642104	1	Forward gear Z1=39		
31B	24642105	1	Forward gear Z1=35		
31C	24643101	1	Forward gear Z1=30		
32A	24642306	1	Intermediate shaft Z4=45, Z5=36		
32B	24642307	1	Intermediate shaft Z4=45, Z5=32		
32C	24643302	1	Intermediate shaft Z4=45, Z5=27		
33A	24642308	1	Intermediate shaft Z2=49, Z6=33		
33B	24642309	1	Intermediate shaft Z2=53, Z6=33		
33C	24643303	1	Intermediate shaft Z2=58, Z6=33		
33D	24644303	1	Intermediate shaft Z2=58, Z6=32		
34a	24642212	1	Spacer		
34A	24642210	1	Output shaft Z7=34		
34B	24644204	1	Output shaft Z7=41		

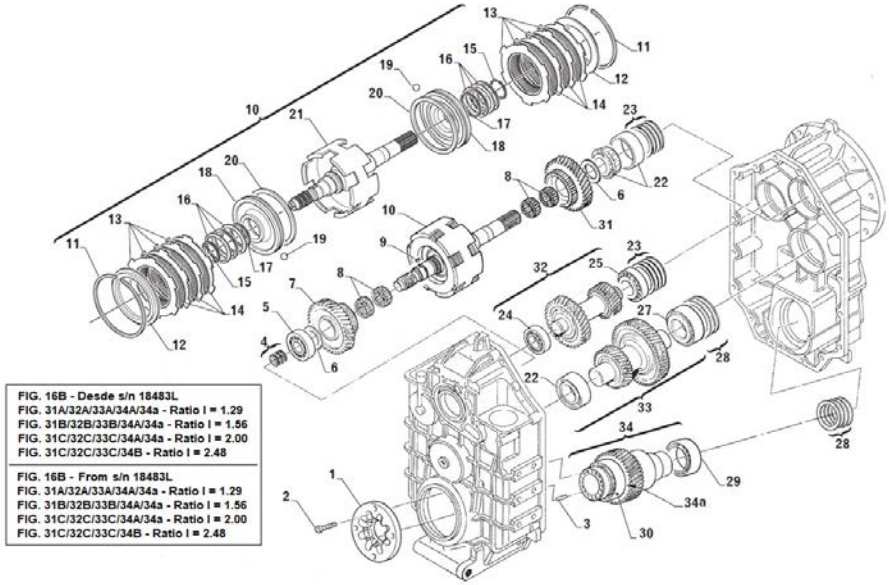

D_50Z3_3			Mechanical Selector Valve		
FIG.	REF.	QTY	DESCR.	FROM	UPTO
1A	24640401	1	Control Valve Assy. 23 Bar		
3	24640403	1	Gasket		
4	24640404	1	Lever		
5	24610404	7	Cap Screw M8X40		
6	24610033	8	Spring Washer		
7	24610041	1	Hex Nut		
8	24640408	1	Gasket		
9	24640409	1	Stop Screw		
10	24640410	1	Screw Plug		
11	24640411	1	Dummy Plug		
12	24640412	1	Screw Plug M10X1		
13	24640413	3	Washer		
14	24640414	1	Guide Bolt		
15	24640415	1	Spring		
16	24640416	2	Ball		
17	24640417	1	Neutral Safety Switch Assy.		
18	24640418	1	O-Ring		
19	24640419	1	Bushing		
20	24640420	1	Snap Ring		
21	24640421	1	Bushing		
22	24640422	1	Spring		
23	24640423	1	Ball		
24	24640424	1	Spacer		

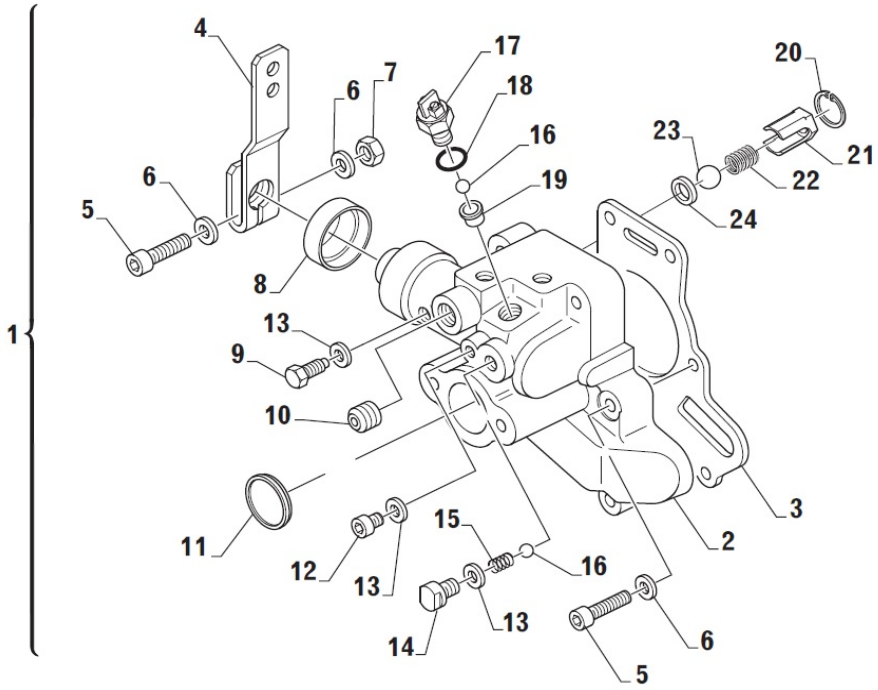

D_50Z3_4			Electric Selector Valve 12V/24V		
FIG.	REF.	QTY	DESCR.	FROM	UPTO
1A	24640501	1	Electr. Selector Valve On/Off 26 Bar 12V		
1B	24640502	1	Electr. Selector Valve On/Off 26 Bar 24V		
2A	24640503	2	Solenoid Valve On/Off 12V, 26 Bar		
2B	24640504	2	Solenoid Valve On/Off 24V, 26 Bar		
3	24640411	1	Dummy Plug		
4	24640412	1	Screw Plug M10X1		
5	24640413	1	Washer		
6	24640410	1	Screw Plug		
7	24640509	2	Cap Screw M8X65		
8	24610404	4	Cap Screw M8X40		
9	24610033	6	Spring Washer		
10	24640512	2	Connector Kit		
11	24640403	1	Gasket		

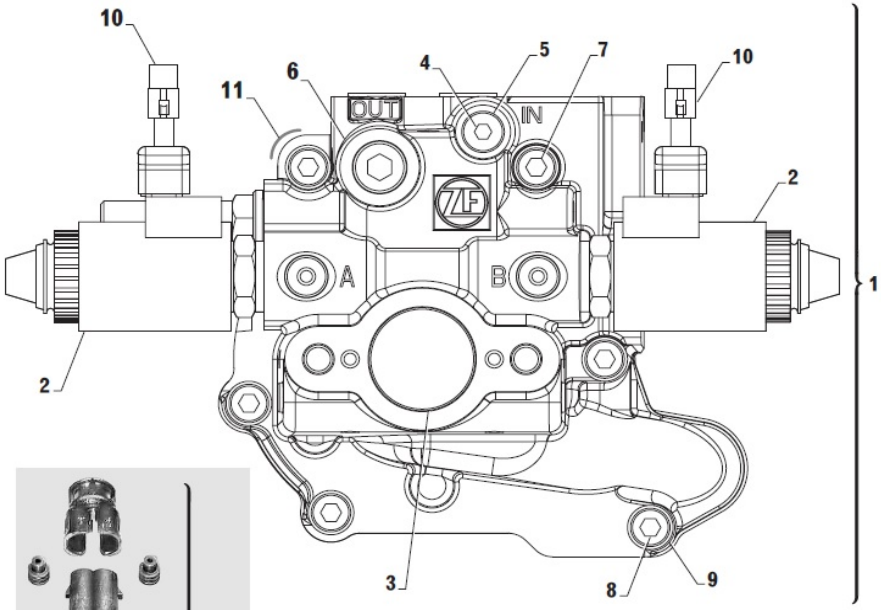

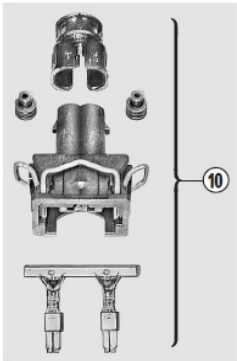

FIG. 2A/2A - Ma = 20 Nm
FIG. 4 - Ma = 12 Nm
FIG. 6 - Ma = 35 Nm
FIG. 12A/12B - 27 Nm

GearBox ZF-63 IV

D_50Z3_5			Electric Selector Valve 12V/24V (TV)		
FIG.	REF.	QTY	DESCR.	FROM	UPTO
1A	24640514	1	Elec. Selec. Valve On/Off 12V 26 Bar TV		
1B	24640515	1	Elec. Selec. Valve On/Off 24V 26 Bar TV		
2A	24640503	2	Solenoid Valve On/Off 12V, 26 Bar		
2B	24640504	2	Solenoid Valve On/Off 24V, 26 Bar		
3	24640411	1	Dummy Plug		
4	24640412	1	Screw Plug M10X1		
5	24640413	1	Washer		
6	24640410	1	Screw Plug		
7	24640509	2	Cap Screw M8X65		
8	24610404	4	Cap Screw M8X40		
9	24610033	6	Spring Washer		
10	24640512	3	Connector Kit		
11	24640526	1	Trolling Device		
12A	24640527	1	Proportional Valve 12V		
12B	24640528	1	Proportional Valve 24V		
13	24640403	1	Gasket		

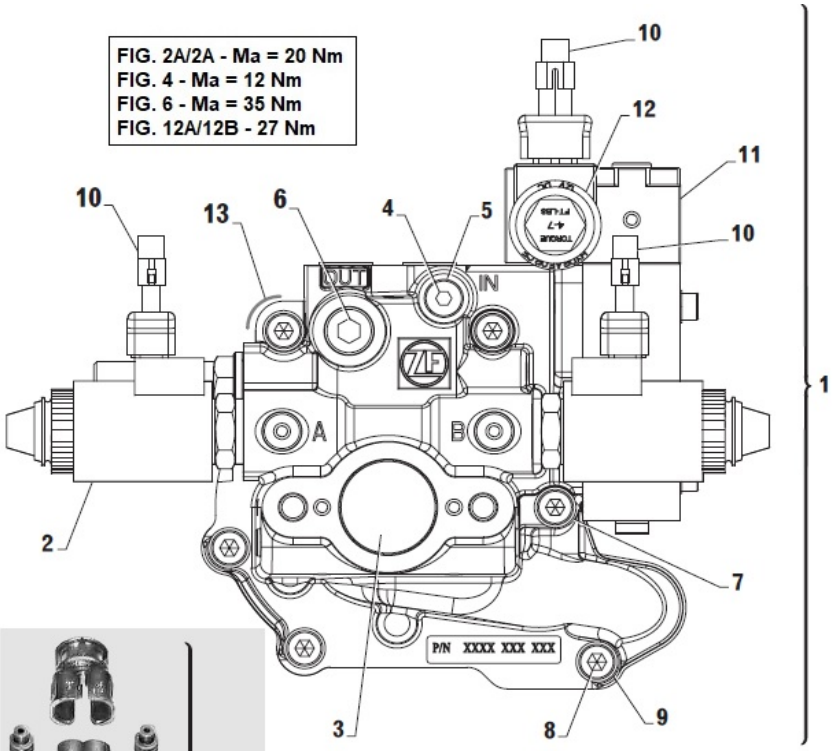

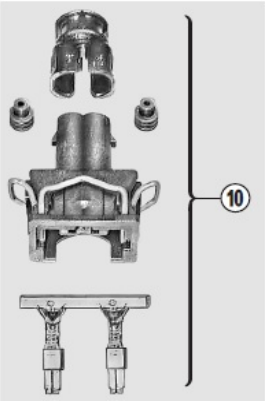

Gearbox TM-485A1

	D_5025_1		Sheet 1/4		
FIG.	**REF.**	**QTY**	**DESCR.**	**FROM**	**UPTO**
3	24873001.1	1	Housing TM 485A1 [NP]		
6	24870102.1	1	Cover		
7	24870007.1	1	Cover		
23	24870080.1	1	BULKHead		
40	24870008.1	1	Gauge Oil LEVEL		
41	24870043	1	Pump Assy Oil		
43	24810506	1	Screw		
46	24870045.1	1	Screw [NP]		
47	24870046.1	1	Screw		
49	24810011	3	Plug,oil drain		
50	24830017	1	Plug		
63	24810088	3	Washer 14-20-1,5 [NP]		
64	24830016	1	Washer 18-23-1,5 [NP]		
65	24850092	1	Washer		
68	24850093	16	Washer		
69	24810044	7	Bolt DIN 933 M6-16 8.8 [NP]		
71	24830025	8	Bolt DIN 933 M8-35 8.8 [NP]		
79	24810527	1	SCREW, RACORD		

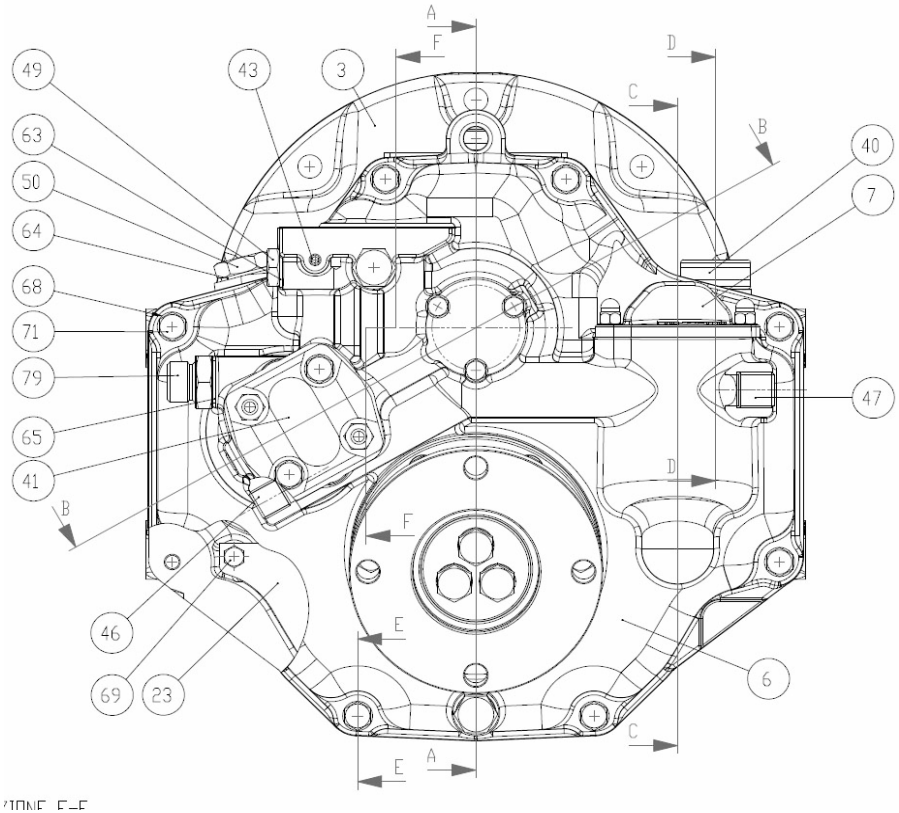

[NP] Not provided

Gearbox TM-485A1

D_5025_2			Sheet 2/4		
FIG.	**REF.**	**QTY**	**DESCR.**	**FROM**	**UPTO**
2	24870062	2	Selector Valve		
4	24870105	1	REAR Cover Input Shaft		
5	24870208	1	REAR Cover Output Shaft		
9	24813500.67	6	Spacer		
10	24870219	3	Shim		
11	24870222	1	Washer		
12	24810307	2	Washer		
13	24870124	2	Piston		
14	24810322	2	Spring		
15	24870201	1	Output Shaft		
16	24873101	1	Input Shaft		
18	24810316	18	Disk		
19	24870115	20	Conduct Disk		
20	24870113	2	Retainer Ring		
21	24810328	4	Washer		
22	24810325	2	Washer		
26	24870081.1	1	SUCTION Pipe [NP]		
31	24810065	1	Plug		
35	24873203	1	Gear R.2,09		
36	24873210	1	Gear R.2,09		
38	24870203	1	TRANSFER Gear,LAY Shaft		
39	24870224	1	Flange Output		
45	24850087	2	Plug		
51	24810103	1	Oil Grommet		
52	24870214	1	LIP Seal		
56	24870059	2	O-Ring		
58	24870318	2	THRUST RACE		
59	24870118	2	THRUST RACE		
60	24810309	4	Roller		
62	24810063	1	Plane Washer		
66	24820075	3	Washer GROWER DIN 127-10 [NP]		
67	24860092	5	Washer		
70	24810047	6	Bolt DIN 933 M8-25 8.8 [NP]		
73	52101310	3	Bolt DIN 931 M10-35 8.8		
75	24870207	2	Bearing		

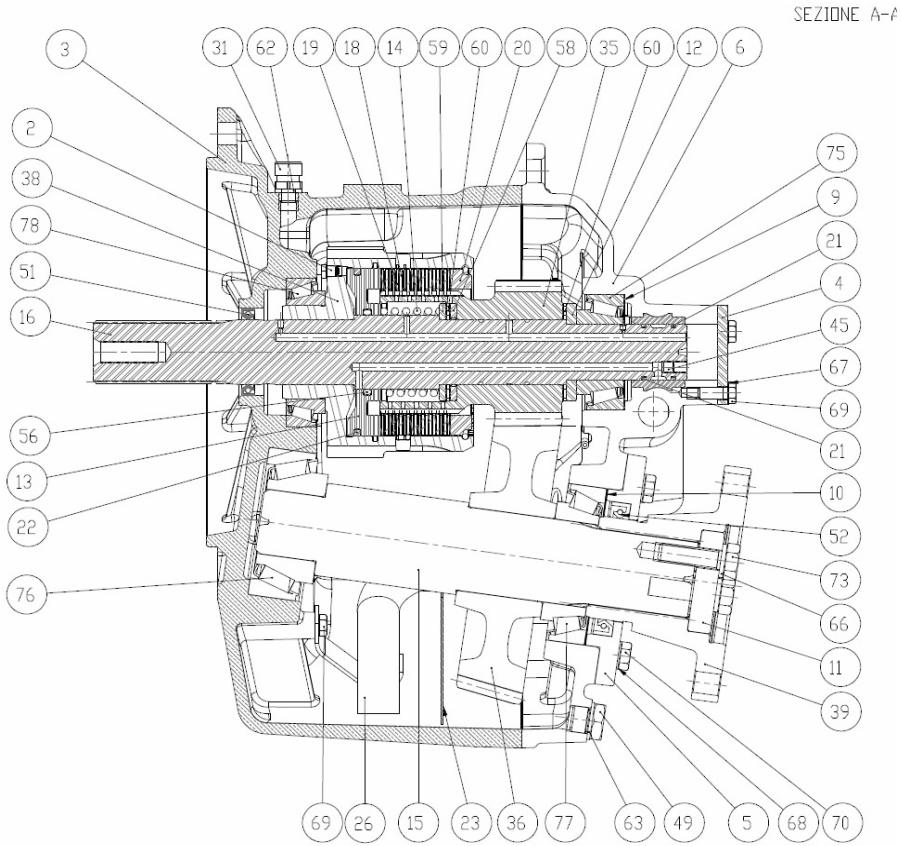

[NP] Not provided

Gearbox TM-485A1

D_5025_2			Sheet 2/4		
FIG.	**REF.**	**QTY**	**DESCR.**	**FROM**	**UPTO**
76	24870212	1	Conical Roller Bearing 30307		
77	24870205	1	Bearing		
78	24870206	2	Bearing		

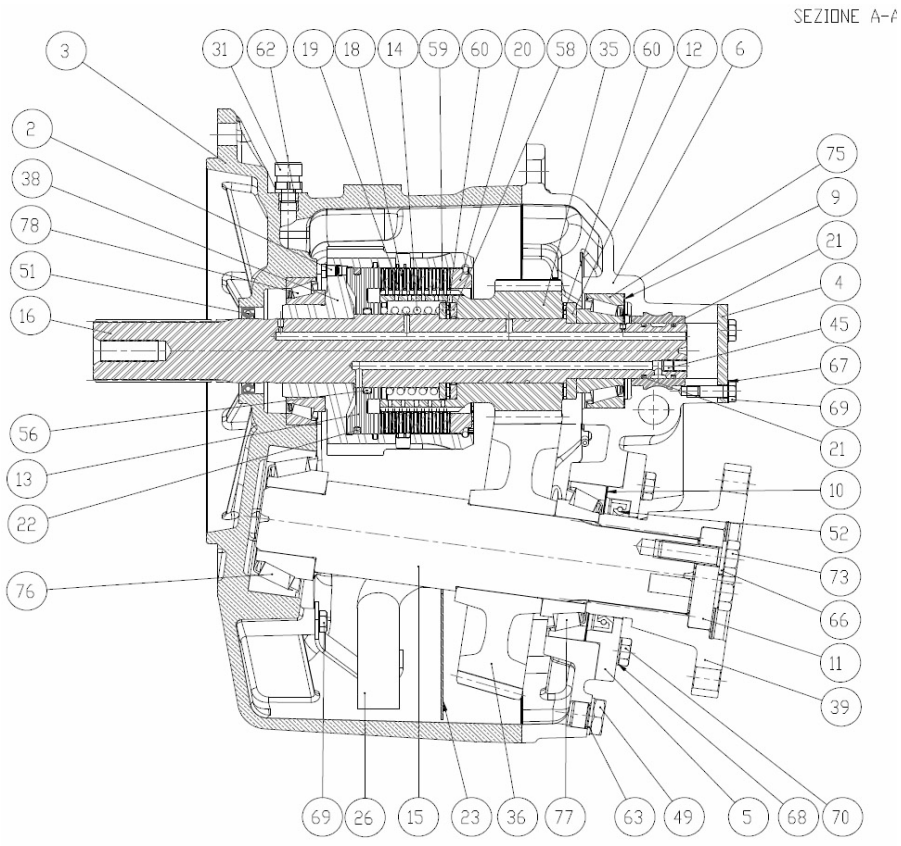

Gearbox TM-485A1

	D_5025_3		Sheet 3/4		
FIG.	REF.	QTY	DESCR.	FROM	UPTO
1	24810062	1	Valve BY PASS [NP]		
17	24870301	1	LAY Shaft		
27	24870082.1	1	Pipe		
28	24870083.1	1	PIPE		
29	24870084.1	1	Bushing		
30	24870310	2	FIXING Ring		
32	24870035.1	1	Oil Filter		
33	24870303	1	Cover		
34	24873302	1	Gear R.2,09		
37	24870103	1	TRANSFER Gear,PRIMARY Shaft		
42	24870086.1	1	Spring [NP]		
44	24870044.1	1	Screw		
48	24870047.1	1	Screw		
55	24870009	1	O-Ring		
57	24870011.1	1	O-Ring		
61	24820086	2	Washer 8-13-1,5 [NP]		
80	24870083	1	PIPE		

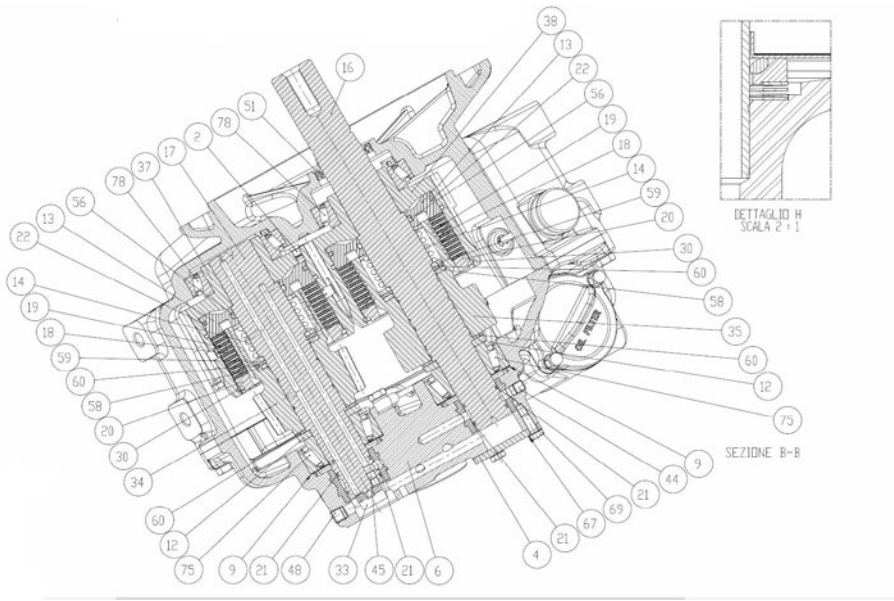

[NP] Not provided

Gearbox TM-485A1

	D_5025_4		Sheet 4/4		
FIG.	**REF.**	**QTY**	**DESCR.**	**FROM**	**UPTO**
8	24870015	1	Gasket		
24	24850005	1	Plate, IDENTIFICATION		
25	24870085	2	Pin		
53	24870009.1	1	O-Ring		
54	24870010.1	2	O-Ring		
72	24870044	2	Screw		
74	24870071	2	Stud		
81	24870012.1	2	Nut		

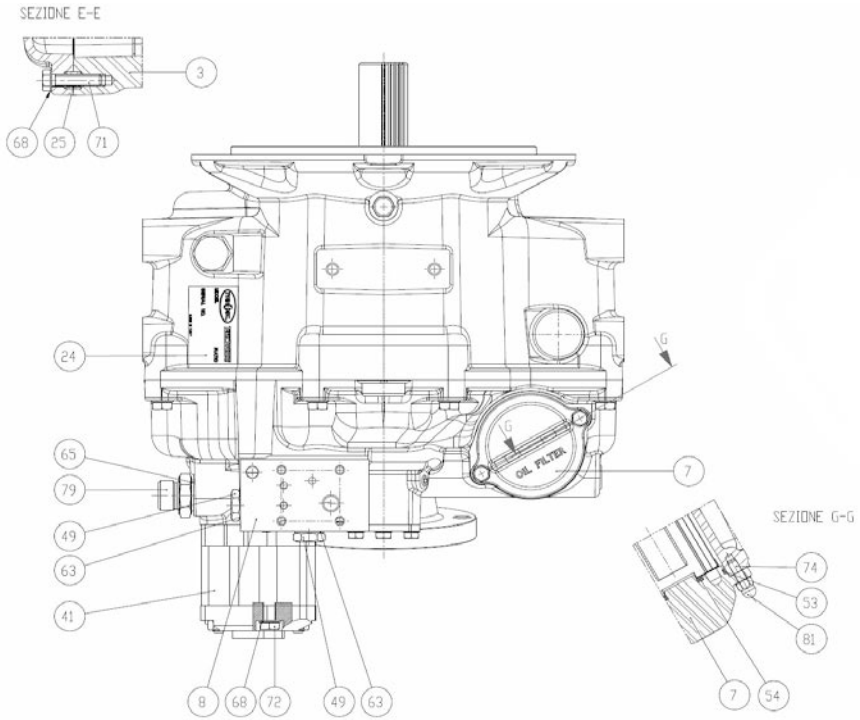

Gearbox TM-485A1

	D_5025_5		Maintenance Kit		
FIG.	**REF.**	**QTY**	**DESCR.**	**FROM**	**UPTO**
1	24873401	1	Gasket Kit		
2	A0105000	1	15W40 Sole Diesel Oil 5L		
3	24873403	2	Clutch Plate Kit		

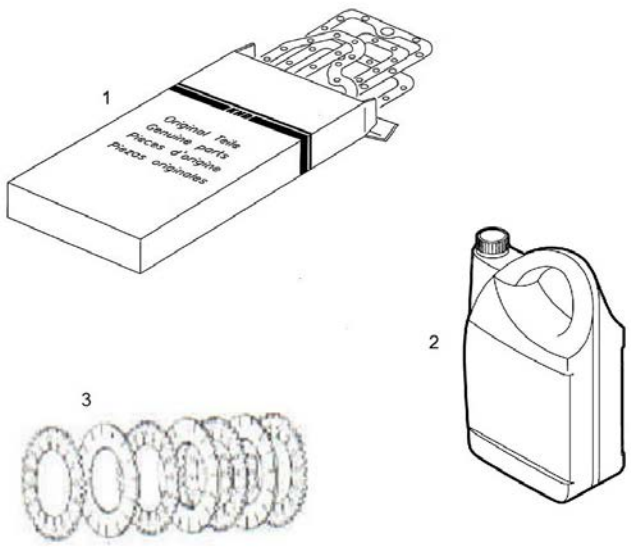

Gearbox TMC-260

	D_5032_1		Sheet 1/3		
FIG.	REF.	QTY	DESCR.	FROM	UPTO
1	24830011	1	Plug		
2	24890008	1	Gauge Oil Level		
3	56000083	1	Washer 21-26-1,5		
4	24890001	1	Cover		
5	24810065	1	Plug		
6	24810063	2	Plane Washer		
7	24890102	1	Cover		
8	24850212	1	Conical Roller Bearing 30207A		
9A	24895101	1	Input Shaft		
9B	24894101	1	Input Shaft		
9C	24893101	1	Input Shaft		
9D	24892101	1	Input Shaft		
10	24810103	1	Oil Grommet		
11	25710104	3	Conical Roller Bearing 32206-J2/Q		
12	24880222	1	Nut		
13	24880201	1	Shaft Output		
14	24880217	2	Shim		
15	24880204	2	Bearing, needle		
16	24880218	2	Shim		
17A	24894203	1	Gear		
17B	24892203	1	Gear		
18	52101261	9	Bolt DIN 931 M8-40 8.8		
19	24850093	17	Washer		
20	24860023	2	Pin		
21	24890302	1	Gear		
22	24890202	1	Clutch		
23	24890307	1	Nut		
24A	24894203	1	Gear		
24B	24895210	1	Gear		
24C	24894210	1	Gear		
24D	24893210	1	Gear		
25	24880205	2	CAGE		
26	24850011	1	Plug,oil drain		
33	52102258	1	Bolt DIN 933 M8-25 8.8		
46	24890205	1	Cover		

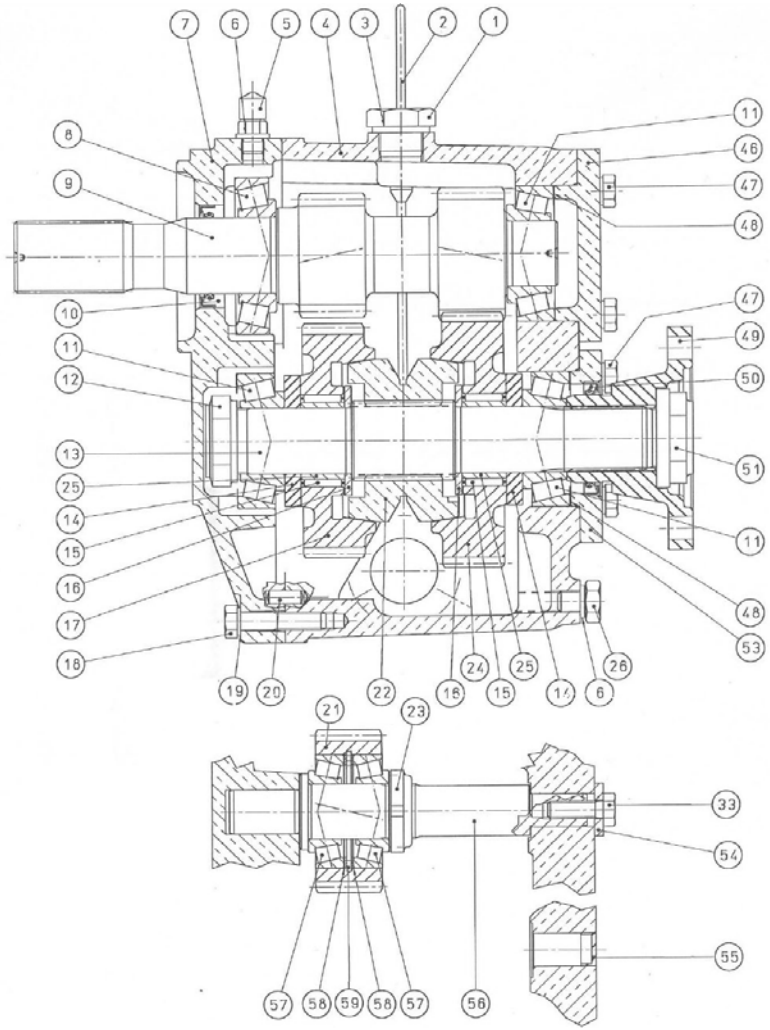

[NP] Not provided

Gearbox TMC-260

D_5032_1			Sheet 1/3		
FIG.	REF.	QTY	DESCR.	FROM	UPTO
47	52102259	8	Bolt DIN 933 M8-30 8.8		
48	24813500.67	6	Spacer		
49	24880224	1	Flange Output		
50	24890214	1	Oil Seal		
51	24850099	1	Nut		
53	24890208	1	Cover		
54	24890306	1	Washer		
55	24890305	1	Plug		
56	24890301	1	INTERMEDIATE Shaft		
57	24860207	2	Conical Roller Bearing 30205A		
58	24890304	2	Washer [NP]		
59	53041052	1	CIRClip DIN 472 I-52		

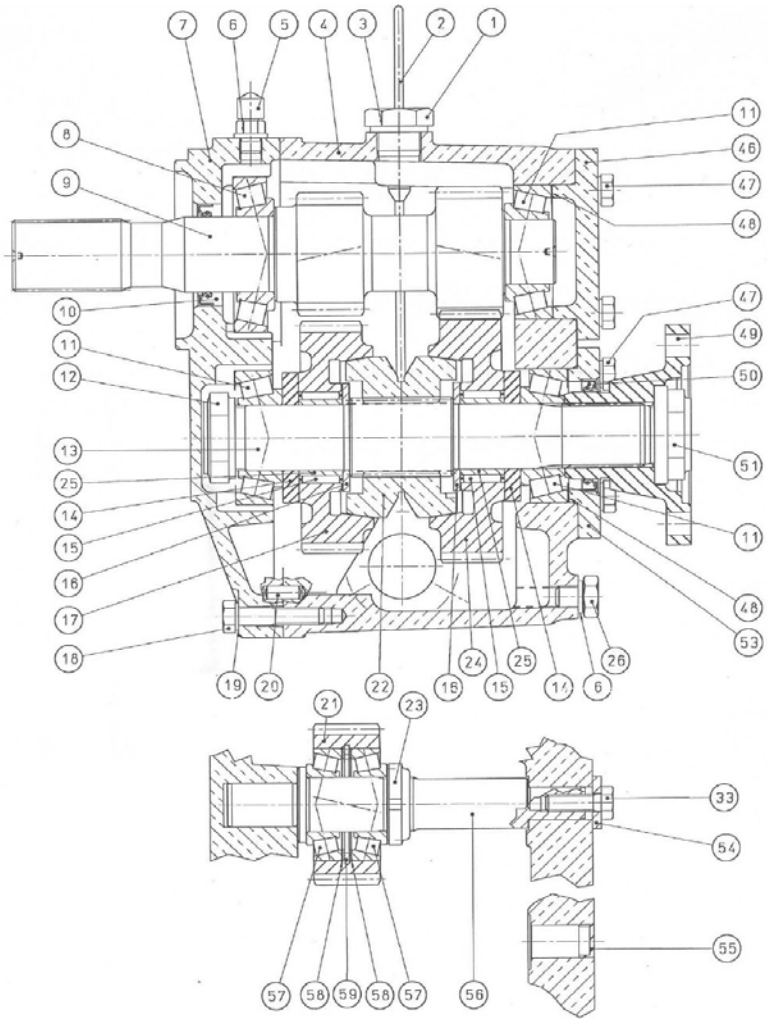

Gearbox TMC-260

	D_5032_2		Sheet 2/3		
FIG.	**REF.**	**QTY**	**DESCR.**	**FROM**	**UPTO**
27	24890026	2	Cover		
28	53052210	1	Pin DIN 1481 3-20		
29	52102257	6	Bolt DIN 933 M8-20 8.8		
30	24880423	1	Pad		
31	24860417	1	O-Ring		
32	24860411	1	Spring		
33	52102258	1	Bolt DIN 933 M8-25 8.8		
34	52120008	2	Nut DIN 934 M8 8.8		
35	51123008	1	Nut DIN 985 M8 5.6		
36	52111260	1	ROD DIN 913 M8-35 8.8		
37	24860071	2	STUD		
38	53033008	2	Washer GROWER DIN 127-8		
39	51030008	2	Washer DIN 125-8		
40	24880402	1	Shaft		
41	24860404	1	Oil Seal		
42	24880401	1	Cover		
43	24810424	1	Lever		
44	24860419	1	Pin		
45	24850005	1	Plate, IDENTIFICATION		
52	53038006	6	Washer DIN 6798-A 6		

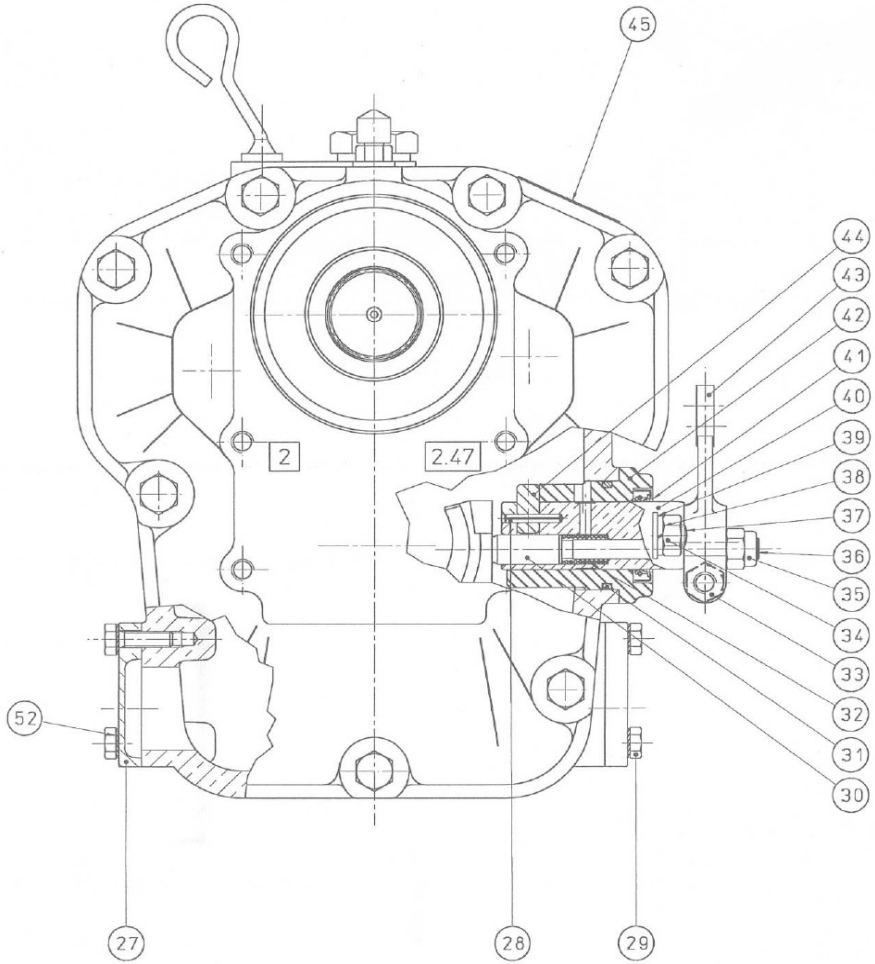

D_5032_3			Cooling System 3/3		
FIG.	REF.	QTY	DESCR.	FROM	UPTO
1	24890051	2	Cover		
2	24890052	2	O-Ring D. 32X2,5		
3	24890053	2	Elbow		
4	24890054	1	Cooler Pipe		

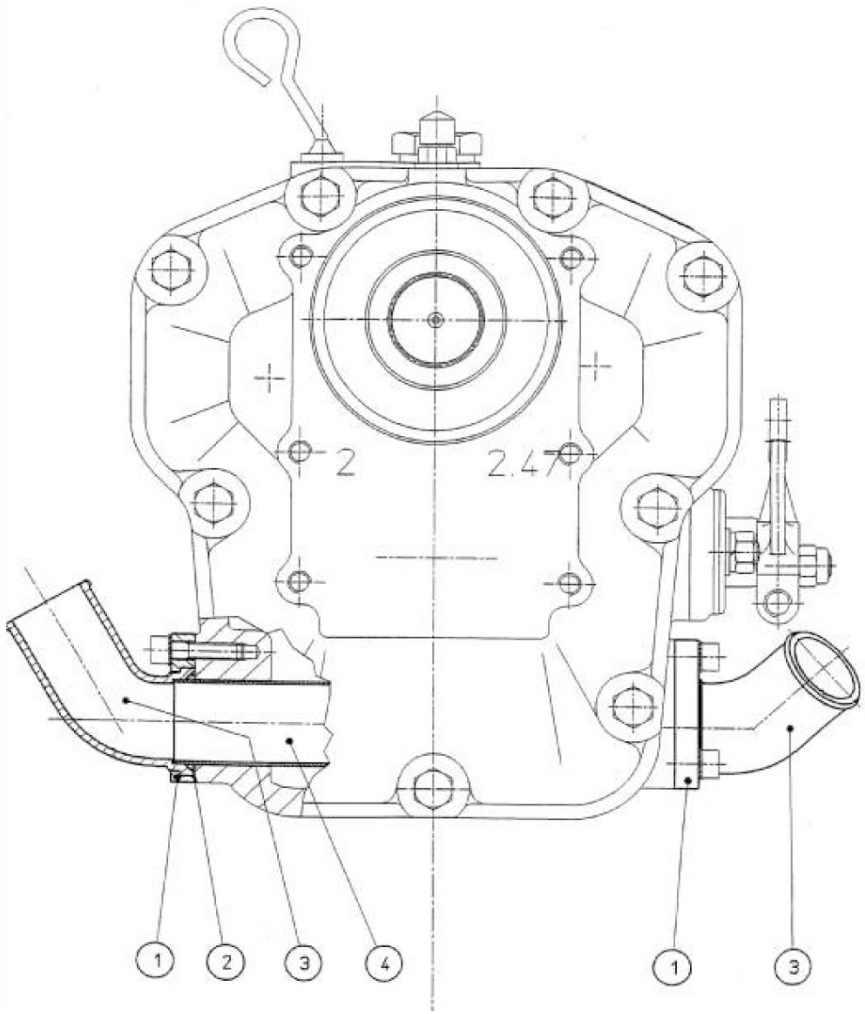

Gearbox TMC-260

	D_5032_4		Maintenance Kit		
FIG.	**REF.**	**QTY**	**DESCR.**	**FROM**	**UPTO**
1	24890401	1	Kit Gasket		
2	A0201000	2	ATF Sole Diesel Oil 1L		

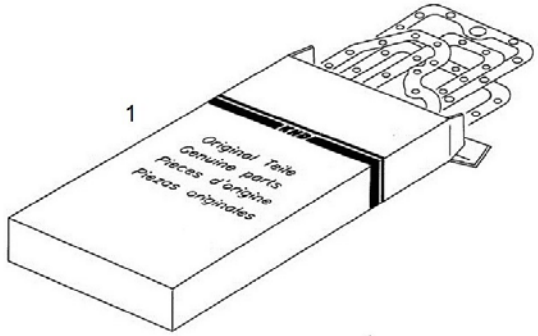

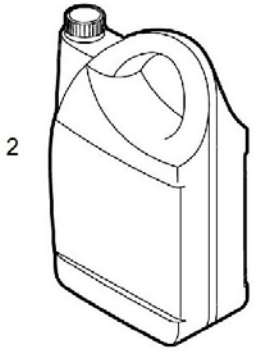

Gearbox TM-880A

D_5026_1.1			Sheet 1.1/4		
FIG.	REF.	QTY	DESCR.	FROM	UPTO
1	24820090	2	Pin		
2	24816080	1	Plate Pipe		
3	24810082	2	Bolt DIN 933 M8-10 8.8 [NP]		
4	24816001	1	Front Body TM 880A		
5	24810047	6	Bolt DIN 933 M8-25 8.8 [NP]		
6	24810014	6	Washer GROWER DIN 127-8 [NP]		
7	24820072	1	Cover Input Shaft		
8	24820103	1	Oil Grommet		
9	24810065	1	Plug		
10	24820005.1	1	NAME Plate		
11	24810071	2	Stud		
12	56000083	1	Washer 21-26-1,5		
13	24810012	1	Nut		
14	24810063	1	Plane Washer		
15	24810068	1	Plug		
16	24810008	1	ROD, Oil LEVEL		
17	24820071	2	Stud		
18	24816002	1	REVERSE Body TM 880A		
19	24810059	1	Plane Washer		
20	24810060	1	Racord		
21	24810062	1	Valve BY PASS [NP]		
22	24820086	1	Washer 8-13-1,5 [NP]		
23	24830105	1	Plug		
24	24820102	1	Cover, REAR		

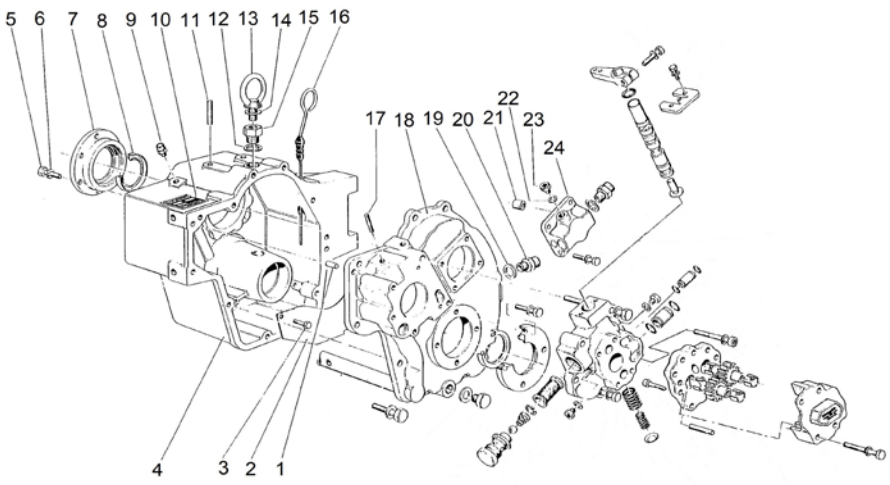

[NP] Not provided

Gearbox TM-880A

D_5026_1.2			Sheet 1.2/4		
FIG.	REF.	QTY	DESCR.	FROM	UPTO
25	24810013	4	Bolt DIN 931 M8-65 8.8 [NP]		
26	24820015.1	1	Oil Pump Body		
27	24820025.1	3	Bolt DIN 912 M6-25 8.8 [NP]		
28	24810025	4	Bushing		
29	24810096	1	Gear, Conduct		
30	24820023.1	2	Pin		
31	24820026	1	Distributor Cap		
32	24810055	1	Expansion Plug		
33	24816054	1	Spring, Valve		
34	24820098	2	Bolt DIN 912 M10-50 8.8 [NP]		
35	24810035	1	Oil Filter		
36	24810032	1	SNAP Ring		
37	24810030	1	Valve Spring		
38	18024143	1	Ball,steel 1/2"		
39	24810027	1	Washer		
40	24810024	1	Plug, Oil Filter DRAIN		
41	24820208	1	Cover Front		
42	24820214	1	Grommet		
43	24810011	1	Plug,oil drain		
44	24810088	1	Washer 14-20-1,5 [NP]		
45	52101314	1	Bolt DIN 931 M10-55 8.8		
46	24816081	1	Aspiration Tube TM 880A		
NS	24820013	2	Bolt DIN 912 M10-30 8.8 [NP] [NS]		
NS	24810026.1	3	Cover [NS]		
NS	24820090	2	Pin [NS]		
NS	52103311	9	Bolt DIN 912 M10-40 8.8 [NS]		

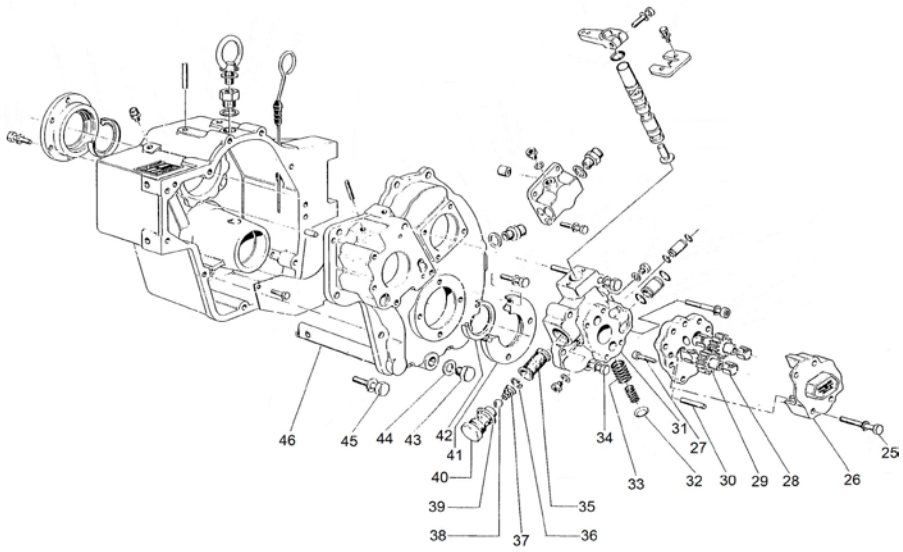

[NP] Not provided
[NS] Not shown

Gearbox TM-880A

D_5026_1.3			Sheet 1.3/4		
FIG.	REF.	QTY	DESCR.	FROM	UPTO
47	24820062	2	Tube, Racord		
48	24820063	2	O-Ring D. 15X1,7		
49	24820013	2	Bolt DIN 912 M10-30 8.8 [NP]		
50	24810026.1	3	Cover		
51	24810095	3	Gear, ConductOR		
52	24810056	1	O-Ring D. 15,08X2,62 [NP]		
54	24810044	2	Bolt DIN 933 M6-16 8.8 [NP]		
55	24810042	2	Washer GROWER DIN 127-6 [NP]		
56	24810041	1	Support		
57	24810051	1	Distributor		
58	24810052	1	Valve		
59	24820075	4	Washer GROWER DIN 127-10 [NP]		
60	24820076	4	Bolt DIN 933 M10-30 8.8 [NP]		
61	24820087	1	Bolt DIN 931 M10-130 8.8 [NP]		
62	24820060	1	Tube, Racord		
63	24820059	2	O-Ring D. 10X1,7		
82	24810424	1	Lever		
NS	56000083	1	Washer 21-26-1,5 [NS]		
NS	24820102	1	Cover, REAR [NS]		
NS	24830105	1	Plug [NS]		
NS	24820103	1	Oil Grommet [NS]		

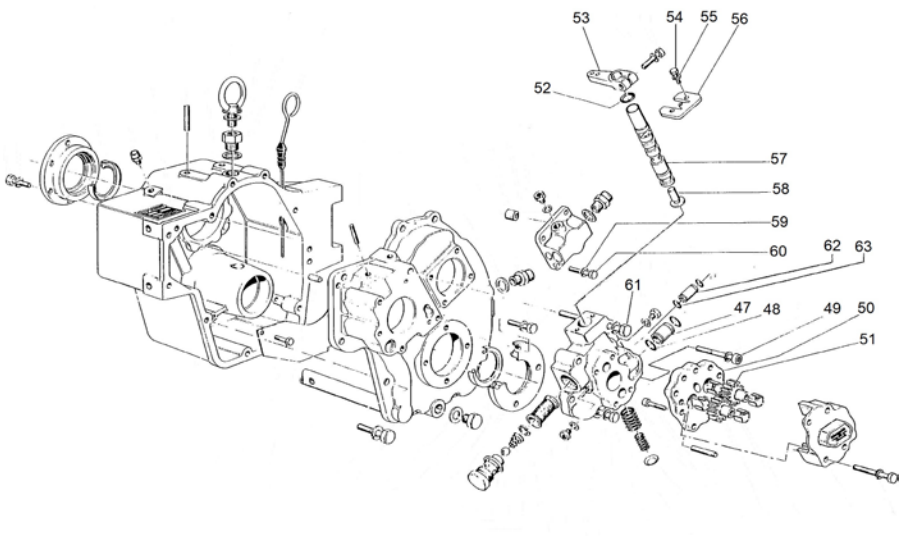

[NP] Not provided
[NS] Not shown

Gearbox TM-880A

D_5026_2			Input Shaft 2/4		
FIG.	REF.	QTY	DESCR.	FROM	UPTO
1	24820134	1	Conical Roller Bearing 32011-JR		
2	24810326	1	Plug		
3	24820130	1	Bell		
4	24820125	1	Washer		
5	24820124	1	Piston		
6	24820115	9	Disk		
7	24820116	8	Disk		
8	24810211	1	KEY		
9	24820126	1	Washer		
10	24820101	1	Input Shaft		
11	24810328	2	Washer		
117	24810333	0	Spacer [VAR]		
12	24810326	1	Plug		
13	24820122	1	Spring		
14	24820123	1	Bearing		
15	24820113	1	Grommet		
16	24820129	1	Ring		
17	24820128	1	SNAP Ring		
18A	24822302	1	Gear R. 1,50 TM 170		
18B	24823302	1	Gear R. 2,04 TM 170		
18C	24824302	1	Gear R. 2.50 TM 170		
19	24820117	1	Bushing		
20	24820118	1	Ring		
21	24820121	1	Roller Bearing AXK-4060		
22	24820105	1	Washer		
23	24820104	1	Conical Roller Bearing 32307		

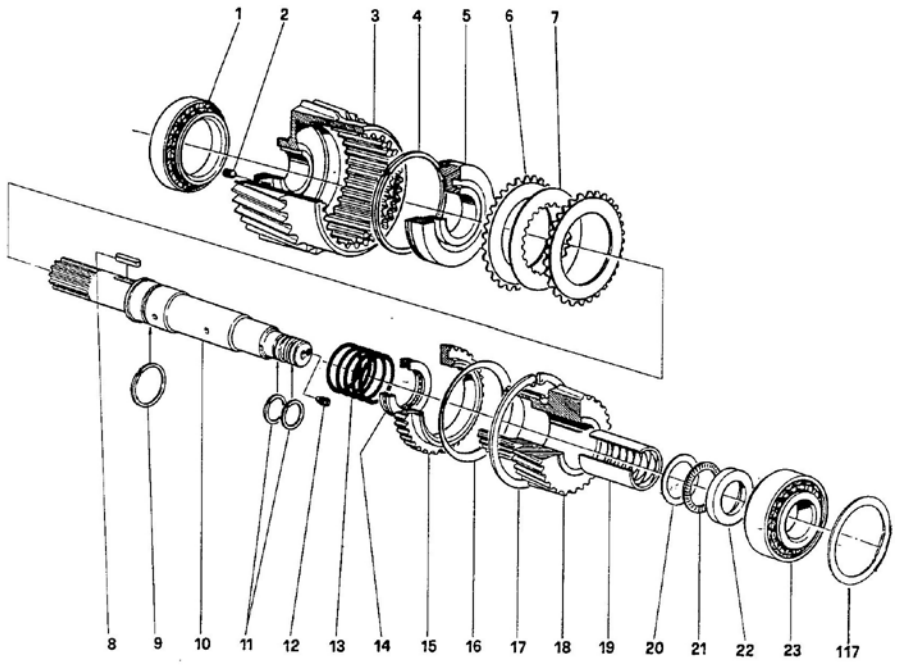

[VAR] Variable according to repair

Gearbox TM-880A

D_5026_3			Intermediate Shaft 3/4		
FIG.	REF.	QTY	DESCR.	FROM	UPTO
117	24810333	0	Spacer [VAR]		
24	24820134	1	Conical Roller Bearing 32011-JR		
25	24810326	1	Plug		
26	24820330	1	Bell		
27	24820125	1	Washer		
28	24820124	1	Piston		
29	24820115	9	Disk		
30	24820116	8	Disk		
31	24810211	1	KEY		
32	24820126	1	Washer		
33	24820301	1	INTERMEDIATE Shaft		
34	24820126	1	Washer		
35	24810326	1	Plug		
36	24820122	1	Spring		
37	24820123	1	Bearing		
38	24820113	1	Grommet		
39	24820129	1	Ring		
40	24820128	1	SNAP Ring		
41A	24822302A	1	Gear R. 1,53 TM 170A		
41B	24823302A	1	Gear R. 2,08 TM 170A		
41C	24824302A	1	Gear R. 2,60 TM 170A		
42	24820117	1	Bushing		
43	24820118	1	Ring		
44	24820121	1	Roller Bearing AXK-4060		
45	24820105	1	Washer		
46	24820104	1	Conical Roller Bearing 32307		

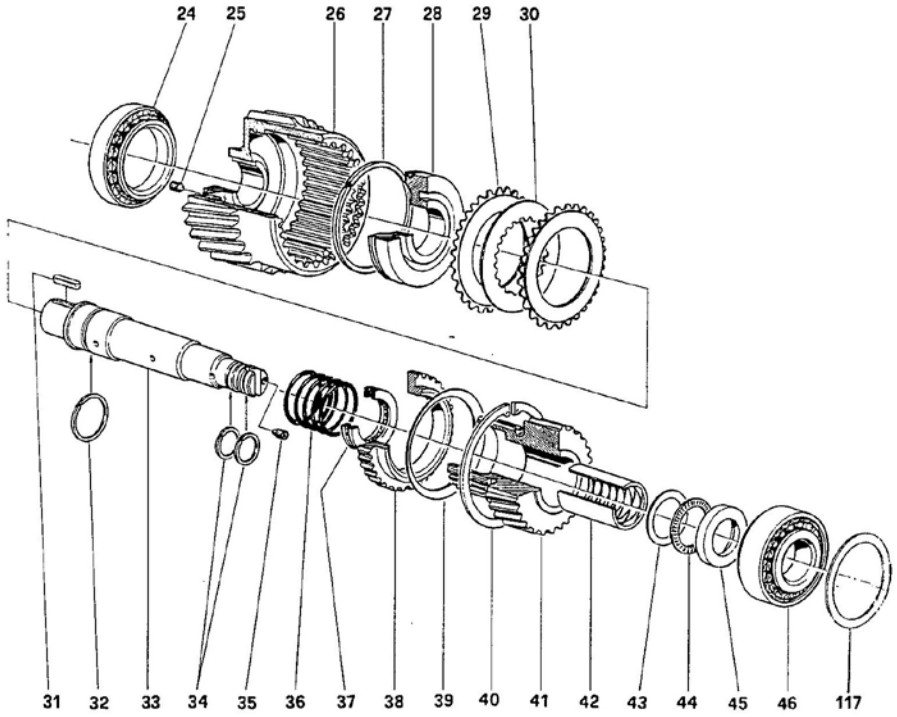

[VAR] Variable according to repair

Gearbox TM-880A

	D_5026_4		Output Shaft 4/4		
FIG.	REF.	QTY	DESCR.	FROM	UPTO
140	24820333.1	0	Shim [VAR]		
47	24820206	1	Conical Roller Bearing 33210		
48/51	24823201AC	1	Gear+Output Shaft Kit+Spacer		
48/51	24822201AC	1	Gear+Output Shaft Kit+Spacer		
48/51	24824201AC	1	Gear+Output Shaft Kit+Spacer		
52	24820212	1	Conical Roller Bearing 30210-J2/Q		
53	24820224	1	Flange, Output		
54	24820225	1	O-Ring D. 45X3,5		
55	24820219	1	BUTT Washer		
56	24820220	1	Pin		
57	24820221	1	1 [NP]		
58	24820222.1	1	Screw		

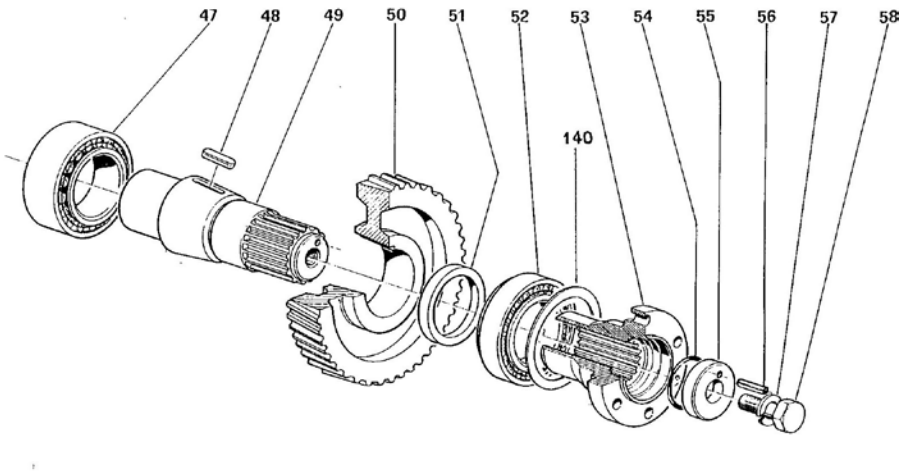

[NP] Not provided

[VAR] Variable according to repair

Gearbox TM-880A

	D_5027_5		Maintenance Kit		
FIG.	**REF.**	**QTY**	**DESCR.**	**FROM**	**UPTO**
1	24820401	1	Kit Gasket		
2	A0105000	1	15W40 Sole Diesel Oil 5L		
3	24820403	2	Clutch Plate Kit		

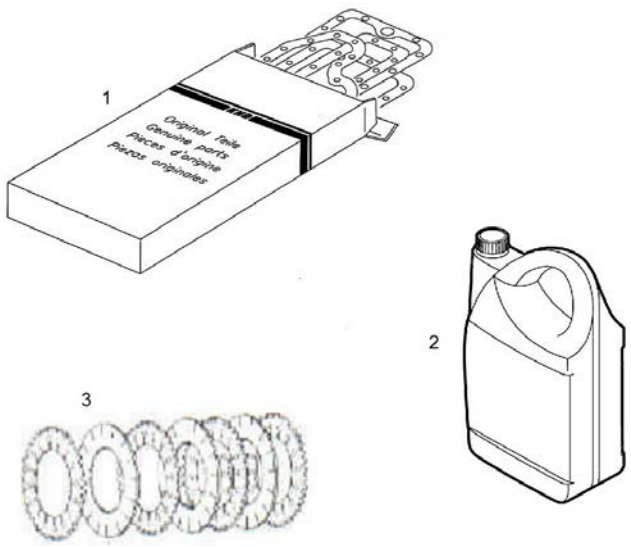

Kit Gearbox

17410110.1			Kit Z-Drive VOLVO 280/290 Z=26		
FIG.	REF.	QTY	DESCR.	FROM	UPTO
1	16510170	1	Flexible Coupling Type C SAE 11"1/2		
2	53038010	8	Washer DIN 6798-A 10		
3	52103308	8	Bolt DIN 912 M10-25 8.8		
4	14910012	1	Bell,housing reverser		
5	53033010	12	Washer GROWER DIN 127-10		
6	52102309	12	Bolt DIN 933 M10-30 8.8		
7	17410110.1R	1	Kit Z-Drive Volvo 280/290 Z=26		
8	53038012	6	Washer DIN 6798-A 12		
9	52301309	6	Bolt DIN 931 W7/16-30 8.8		
NS	M87503040	1	Water Intake Hose (HQ) D. 30-38 [NS]		
NS	14711030	1	Hose [NS]		
NS	14711031	1	Hose [NS]		
NS	54082025	2	Clamp DIN 3017 25-40/12 W4 [NS]		
NS	58088281	1	Pastic Cable Zip Tie [NS]		

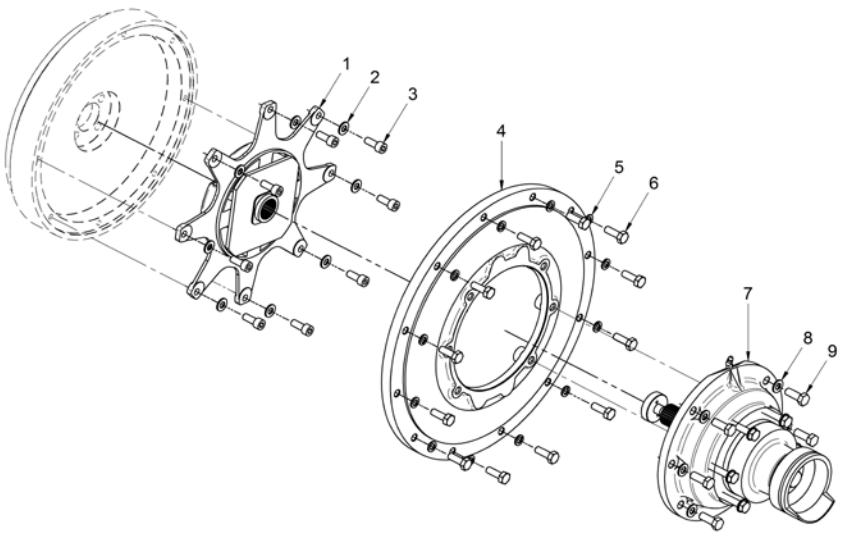

[NS] Not shown

Kit Gearbox

17410110.2			Kit Z-Drive Volvo 280/290 Z=10		
FIG.	REF.	QTY	DESCR.	FROM	UPTO
1	16510170	1	Flexible Coupling Type C SAE 11"1/2		
2	53038010	8	Washer DIN 6798-A 10		
3	52103308	8	Bolt DIN 912 M10-25 8.8		
4	14910012	1	Bell,housing reverser		
5	53033010	12	Washer GROWER DIN 127-10		
6	52102309	12	Bolt DIN 933 M10-30 8.8		
7	17410110.2R	1	Kit Z-Drive Volvo 280/290 Z=10		
8	53038012	6	Washer DIN 6798-A 12		
9	52301309	6	Bolt DIN 931 W7/16-30 8.8		
NS	M87503040	1	Water Intake Hose (HQ) D. 30-38 [NS]		
NS	14711030	1	Hose [NS]		
NS	14711031	1	Hose [NS]		
NS	54082025	2	Clamp DIN 3017 25-40/12 W4 [NS]		
NS	58088281	1	Pastic Cable Zip Tie [NS]		

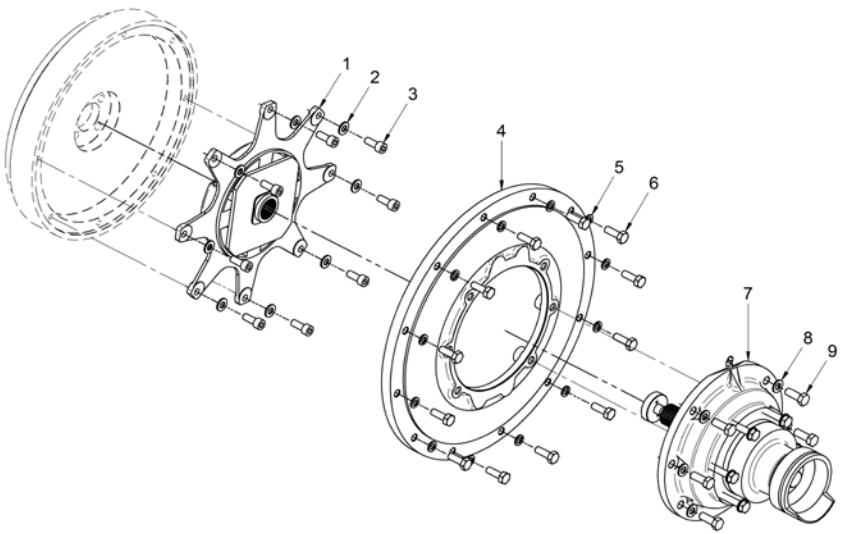

[NS] Not shown

Kit Gearbox

17410200			Kit GearBox TM-93		
FIG.	**REF.**	**QTY**	**DESCR.**	**FROM**	**UPTO**
1	16510170	1	Flexible Coupling Type C SAE 11"1/2		
2	53038010	8	Washer DIN 6798-A 10		
3	52103308	8	Bolt DIN 912 M10-25 8.8		
5	53033010	14	Washer GROWER DIN 127-10		
6	24810021	1	SAE3 Housing TM-93 and 170		
7	52102309	12	Bolt DIN 933 M10-30 8.8		
8	52102306	1	Bolt DIN 933 M10-15 8.8	06/06/2007	
9	56000061	1	Washer 10-16-1,5		
10	ALLPA.93	1	Coupling,cable	23/05/2017	
10	14719115	1	Coupling,cable		23/05/2017
11	51030006	4	Washer DIN 125-6		
12	51051107	1	Pin DIN-94 1,6-16		
13	52102256	2	Bolt DIN 933 M8-15 8.8		
14	53033008	6	Washer GROWER DIN 127-8		
15	51030008	6	Washer DIN 125-8		
16	18619020	1	Bracket,Gear box control		
17	51030005	2	Washer DIN 125-5		
18	24810913	1	Clamp,CABLE		
19	51030010	2	Washer DIN 125-10		
20	52120010	2	Nut DIN 934 M10 8.8		
21	52102257	4	Bolt DIN 933 M8-20 8.8		
22	13912041	1	Bracket,TM Oil Cooler		
23	14712015	2	Bolt,Coupling pipe oil		
24	57000375	4	Washer 17-22-1,5		
25	54082025	4	Clamp DIN 3017 25-40/12 W4		
26	17411022	1	Rubber Elbow		
27	18011026	1	Pipe		
28	15312007	2	Water Cooler Cover		
29	54082050	2	Clamp DIN 3017 50-70/12 W4		
30	14712051	1	Cooler,oil		
31	52120008	4	Nut DIN 934 M8 8.8		
34	59072604	2	Clamp	29/03/2014	
NS	17112024	2	Pipe, rev.oil Cooler [NS]		

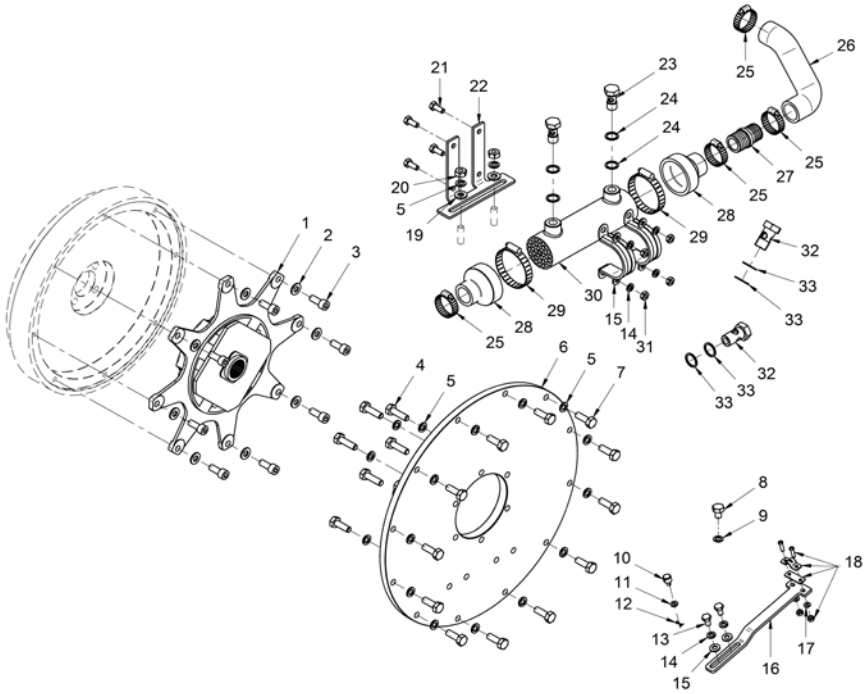

[NS] Not shown

Kit Gearbox

17410210			Kit GearBox TM-345/A		
FIG.	**REF.**	**QTY**	**DESCR.**	**FROM**	**UPTO**
1	17410022	1	Flywheel Supplement		
2	16510170	1	Flexible Coupling Type C SAE 11"1/2		
3	53038010	8	Washer DIN 6798-A 10		
4	52101312	8	Bolt DIN 931 M10-45 8.8		
5	14910012	1	Bell,housing reverser		
6	53033010	12	Washer GROWER DIN 127-10		
7	52101310	12	Bolt DIN 931 M10-35 8.8		
8	53038012	5	Washer DIN 6798-A 12		
9	52302307	5	Bolt DIN 933 W7/16-20 8.8		
10	24810913	1	Clamp,CABLE		
11	51030005	2	Washer DIN 125-5		
12	18619020	1	Bracket,Gear box control		
13	ALLPA.93	1	Coupling,cable	23/05/2017	
13	14719115	1	Coupling,cable		23/05/2017
14	51030008	6	Washer DIN 125-8		
15	51051107	1	Pin DIN-94 1,6-16		
16	17511009	1	Hose		
17	53033008	8	Washer GROWER DIN 127-8		
18	52102256	2	Bolt DIN 933 M8-15 8.8		
19	54082025	4	Clamp DIN 3017 25-40/12 W4		
20	15312007	2	Water Cooler Cover		
21	54082050	2	Clamp DIN 3017 50-70/12 W4		
22	18012041	1	Bracket,TM93/170 oil cooler		
23	52102257	4	Bolt DIN 933 M8-20 8.8		
24	52120008	6	Nut DIN 934 M8 8.8		
25	51031008	2	Washer DIN 9021 8		
26	14712015	2	Bolt,Coupling pipe oil		
27	57000375	4	Washer 17-22-1,5		
29	18011026	1	Pipe		
30	14712051	1	Cooler,oil		
31	12120018	2	Stud		
32	59072604	2	Clamp	29/03/2014	
33	17012024	2	Pipe		
NS	51030006	3	Washer DIN 125-6 [NS]		

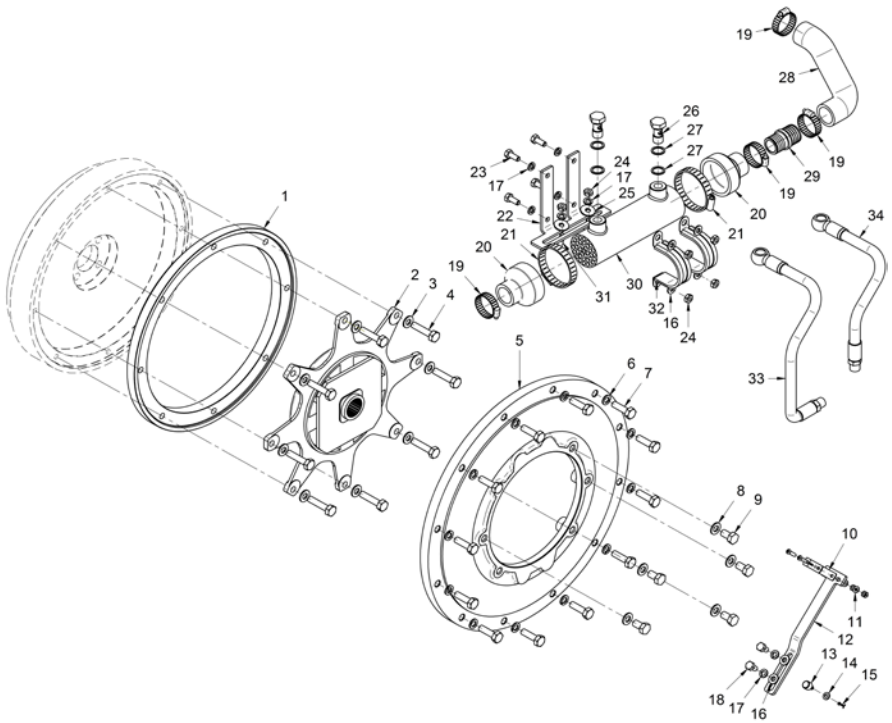

[NS] Not shown

Kit Gearbox

17410215			Kit GearBox TM-170/A/880A		
FIG.	REF.	QTY	DESCR.	FROM	UPTO
1	16510170	1	Flexible Coupling Type C SAE 11"1/2		
2	53038010	8	Washer DIN 6798-A 10		
3	52103308	8	Bolt DIN 912 M10-25 8.8		
4	24810021	1	SAE3 Housing TM-93 and 170		
5	53033010	14	Washer GROWER DIN 127-10		
6	52102309	12	Bolt DIN 933 M10-30 8.8		
7	52102306	1	Bolt DIN 933 M10-15 8.8	06/06/2007	
8	56000061	1	Washer 10-16-1,5		
9	24810913	1	Clamp,CABLE		
10	51030005	2	Washer DIN 125-5		
11	18619020	1	Bracket,Gear box control		
12	51051107	1	Pin DIN-94 1,6-16		
14	ALLPA.93	1	Coupling,cable	23/05/2017	
14	14719115	1	Coupling,cable		23/05/2017
15	51030008	6	Washer DIN 125-8		
16	53033008	6	Washer GROWER DIN 127-8		
17	52120008	6	Nut DIN 934 M8 8.8		
18	17511009	1	Hose		
19	54082025	4	Clamp DIN 3017 25-40/12 W4		
20	15312007	2	Water Cooler Cover		
21	54082050	2	Clamp DIN 3017 50-70/12 W4		
22	14712051	1	Cooler,oil		
23	52120010	2	Nut DIN 934 M10 8.8		
24	51030010	2	Washer DIN 125-10		
25	13912041	1	Bracket,TM Oil Cooler	26/06/2017	
25	18012041	1	Bracket,TM93/170 oil cooler		25/06/2017
26	52102257	4	Bolt DIN 933 M8-20 8.8		
27	18011026	1	Pipe		
28	57000375	4	Washer 17-22-1,5		
29	14712015	2	Bolt,Coupling pipe oil		
30	59072604	2	Clamp	29/03/2014	
31	17112024	1	Pipe, rev.oil Cooler		
32	19412017	1	Pipe,rev.oil cooler	26/06/2017	
NS	51030006	3	Washer DIN 125-6 [NS]	23/05/2017	

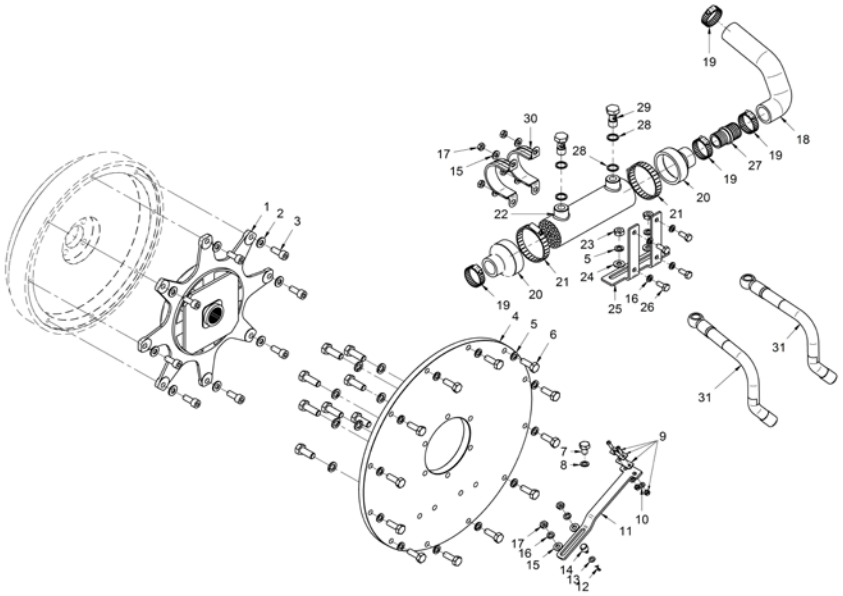

[NS] Not shown

Kit Gearbox

17410220			Kit GearBox BORG WARNER With Oil Cooler		
FIG.	**REF.**	**QTY**	**DESCR.**	**FROM**	**UPTO**
1	16510170	1	Flexible Coupling Type C SAE 11"1/2		
2	53038010	8	Washer DIN 6798-A 10		
3	52103308	8	Bolt DIN 912 M10-25 8.8		
4	14910012	1	Bell,housing reverser		
5	53033010	12	Washer GROWER DIN 127-10		
6	52102310	12	Bolt DIN 933 M10-35 8.8		
7	53033011	8	Washer GROWER DIN 127-11		
8	52301323	6	Bolt DIN 931 W7/16-100 8.8		
9	17112019	1	Bracket,Cooler Oil		
10	52302309	2	Bolt DIN 933 W7/16-30 8.8		
11	51083060	2	Clamp "P" 59-63		
12	14712032	1	Coupling,ball pipe oil		
13	57000375	6	Washer 17-22-1,5		
14	14712035	3	Collar, Union		
15	14712031	4	Retainer		
16	M84501019	1	LOW Pressure Hose D. 10-19	23/10/2008	
17	14712015	3	Bolt,Coupling pipe oil		
18	54082050	2	Clamp DIN 3017 50-70/12 W4		
19	15312007	2	Water Cooler Cover		
20	54082025	4	Clamp DIN 3017 25-40/12 W4		
21	15212022	1	Elbow	15/02/2017	
22	14712051	1	Cooler,oil		
23	18011026	1	Pipe		
24	13211036	1	Pipe 30-40-100		
25	19211011	1	Pipe,water inlet		

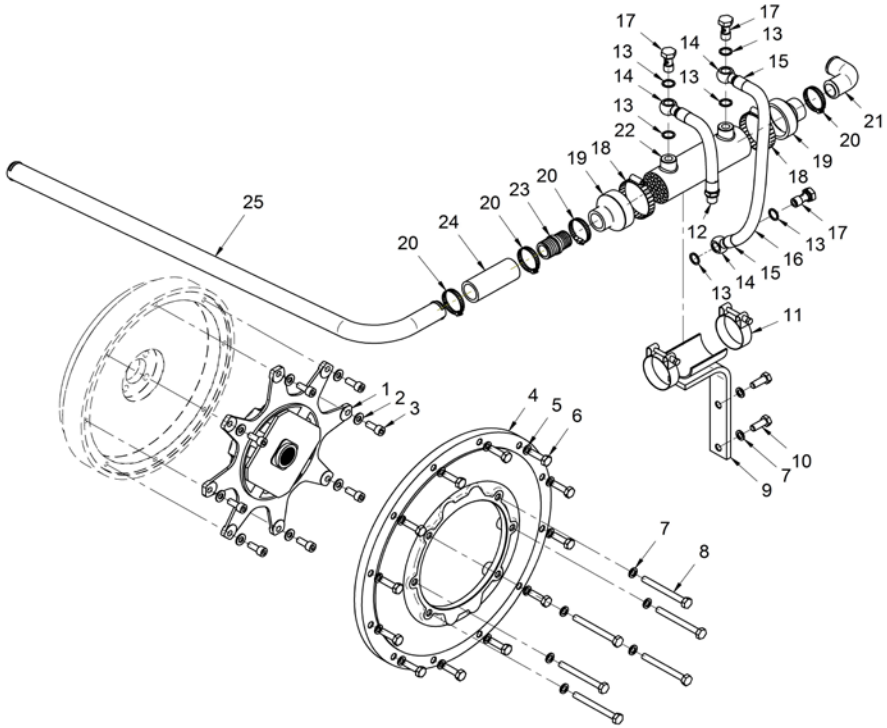

Kit Gearbox

17410221			Kit GearBox BW (Without Oil Cooler)		
FIG.	REF.	QTY	DESCR.	FROM	UPTO
1	16510170	1	Flexible Coupling Type C SAE 11"1/2		
2	53038010	8	Washer DIN 6798-A 10		
3	52103308	8	Bolt DIN 912 M10-25 8.8		
4	14910012	1	Bell,housing reverser		
5	53033010	12	Washer GROWER DIN 127-10		
6	52102310	12	Bolt DIN 933 M10-35 8.8		
7	16510004	1	Spacer,bell housing		26/07/2017
8	53038012	6	Washer DIN 6798-A 12		
9	52301323	6	Bolt DIN 931 W7/16-100 8.8		
NS	M87503040	1	Water Intake Hose (HQ) D. 30-38 [NS]		
NS	17411034	1	Hose [NS]		
NS	54082025	2	Clamp DIN 3017 25-40/12 W4 [NS]		
NS	60180007	1	Outlet Coupling [NS]	20/02/2014	

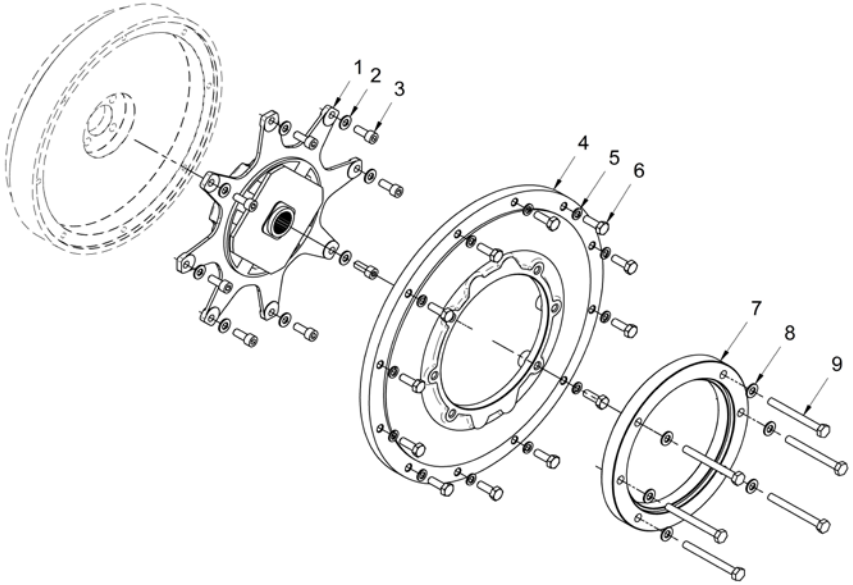

[NS] Not shown

Kit Gearbox

	17410223		Kit GearBox ZF-63IV		
FIG.	**REF.**	**QTY**	**DESCR.**	**FROM**	**UPTO**
1	16510170	1	Flexible Coupling Type C SAE 11"1/2		
2	53038010	8	Washer DIN 6798-A 10		
3	52103312	8	Bolt DIN 912 M10-45 8.8		
4	14910012	1	Bell,housing reverser		
5	53033010	16	Washer GROWER DIN 127-10		
6	52102309	12	Bolt DIN 933 M10-30 8.8		
7	53038012	6	Washer DIN 6798-A 12		
8	52301311	5	Bolt DIN 931 W7/16-40 8.8		17/07/2017
8	52302310	5	Bolt DIN 933 W7/16-35 8.8	18/07/2017	
9	ALLPA.93	1	Coupling,cable	23/05/2017	
9	14719115	1	Coupling,cable		23/05/2017
10	51030006	6	Washer DIN 125-6		
11	51051107	1	Pin DIN-94 1,6-16		
12	52102157	2	Bolt DIN 933 M6-20 8.8		
13	55307104	2	Bolt DIN 86 W3/16-10		
14	14719013	1	Clamp,cable		
15	12119021	1	SUPORT Clamp		
16	16519020	1	Bracket, Gear box control		
17	53033006	2	Washer GROWER DIN 127-6		
18	52120006	2	Nut DIN 934 M6 8.8		
19	52320716	1	Nut DIN 934 W 7/16 8.8		
20	17510004	1	Stud 7/16Wx44		
21	54082025	4	Clamp DIN 3017 25-40/12 W4		
22	15312007	2	Water Cooler Cover		
23	54082050	2	Clamp DIN 3017 50-70/12 W4		
24	57000375	4	Washer 17-22-1,5		
25	17017102	2	Spacer 10,5X22X46		
26	14712015	2	Bolt,Coupling pipe oil		
27	16512010	1	Bracket,oil cooler		
28	17511009	1	Hose		
29	18011026	1	Pipe		
30	14712051	1	Cooler,oil		
31	51083060	1	Clamp "P" 59-63		
32	18512024	2	Pipe		
33	17410022	1	Flywheel Supplement		

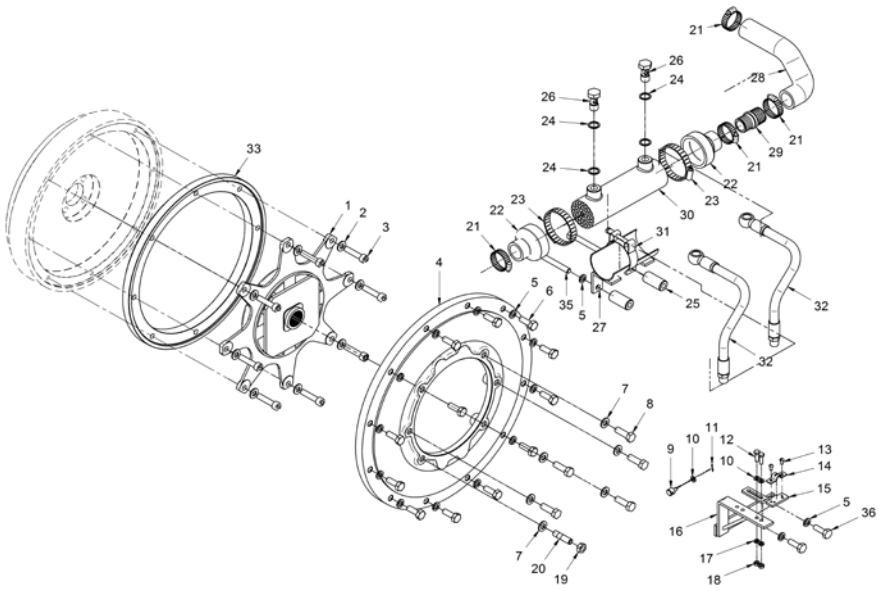

Kit Gearbox

17410223			Kit GearBox ZF-63IV		
FIG.	**REF.**	**QTY**	**DESCR.**	**FROM**	**UPTO**
35	52101319	2	Bolt DIN 931 M10-80 8.8		
36	52302258	2	Bolt DIN 933 W3/8-25 8.8		

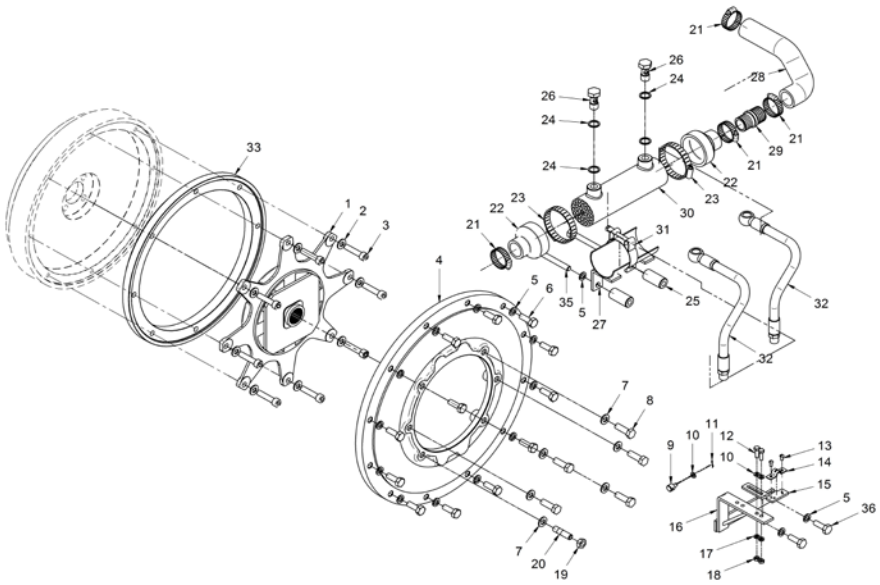

Kit Gearbox

	17410228		Kit SAE 7		
FIG.	**REF.**	**QTY**	**DESCR.**	**FROM**	**UPTO**
1	14910012	1	Bell,housing reverser		
2	53033010	12	Washer GROWER DIN 127-10		
3	52102309	12	Bolt DIN 933 M10-30 8.8		

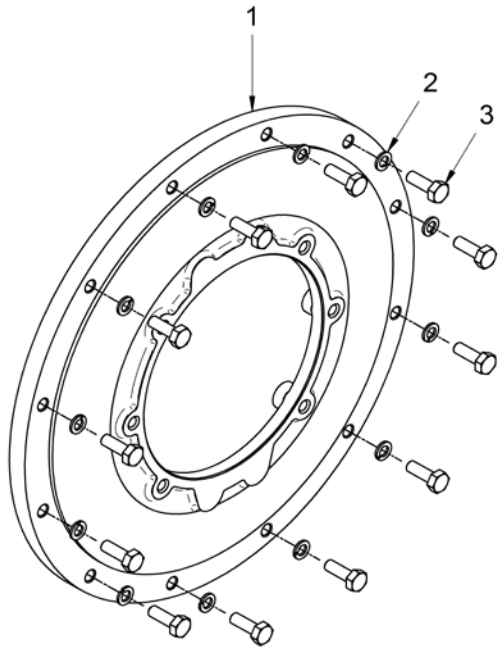

Kit Gearbox

17510224			Kit GearBox TM-485A1		
FIG.	**REF.**	**QTY**	**DESCR.**	**FROM**	**UPTO**
1	16510170	1	Flexible Coupling Type C SAE 11"1/2		
2	53038010	8	Washer DIN 6798-A 10		
3	52103308	8	Bolt DIN 912 M10-25 8.8		
4	14910012	1	Bell,housing reverser		
5	53033010	12	Washer GROWER DIN 127-10		
6	52102309	12	Bolt DIN 933 M10-30 8.8		01/11/2017
6	52102310	12	Bolt DIN 933 M10-35 8.8	02/11/2017	
7	53038012	6	Washer DIN 6798-A 12		
8	52302309	5	Bolt DIN 933 W7/16-30 8.8		
9	52320716	1	Nut DIN 934 W 7/16 8.8		
10	17510004	1	Stud 7/16Wx44		
11	54082025	4	Clamp DIN 3017 25-40/12 W4		
12	15312007	2	Water Cooler Cover		
13	54082050	2	Clamp DIN 3017 50-70/12 W4		
14	14712051	1	Cooler,oil		
15	51030008	6	Washer DIN 125-8		
16	52120008	6	Nut DIN 934 M8 8.8		
17	59072604	2	Clamp	29/03/2014	
18	57000375	4	Washer 17-22-1,5		
19	14712015	2	Bolt,Coupling pipe oil		
20	53033008	8	Washer GROWER DIN 127-8		
21	51031008	2	Washer DIN 9021 8		
22	13912041	1	Bracket,TM Oil Cooler	02/11/2017	
22	18012041	1	Bracket,TM93/170 oil cooler		01/11/2017
23	12120018	2	Stud		
24	52102257	6	Bolt DIN 933 M8-20 8.8		
25	17512011	1	Pipe		
26	17512010	1	Pipe		
27	18011026	1	Pipe	02/11/2017	
28	1A011035	1	Hose	02/11/2017	
NS	13411036	1	Pipe 30-40-120 [NS]	02/11/2017	
NS	17519003	1	Bracket Spacer, Engine Control [NS]		
NS	24810913	1	Clamp,CABLE [NS]		
NS	52102112	2	Bolt DIN 933 M5-45 8.8 CINCADO [NS]		

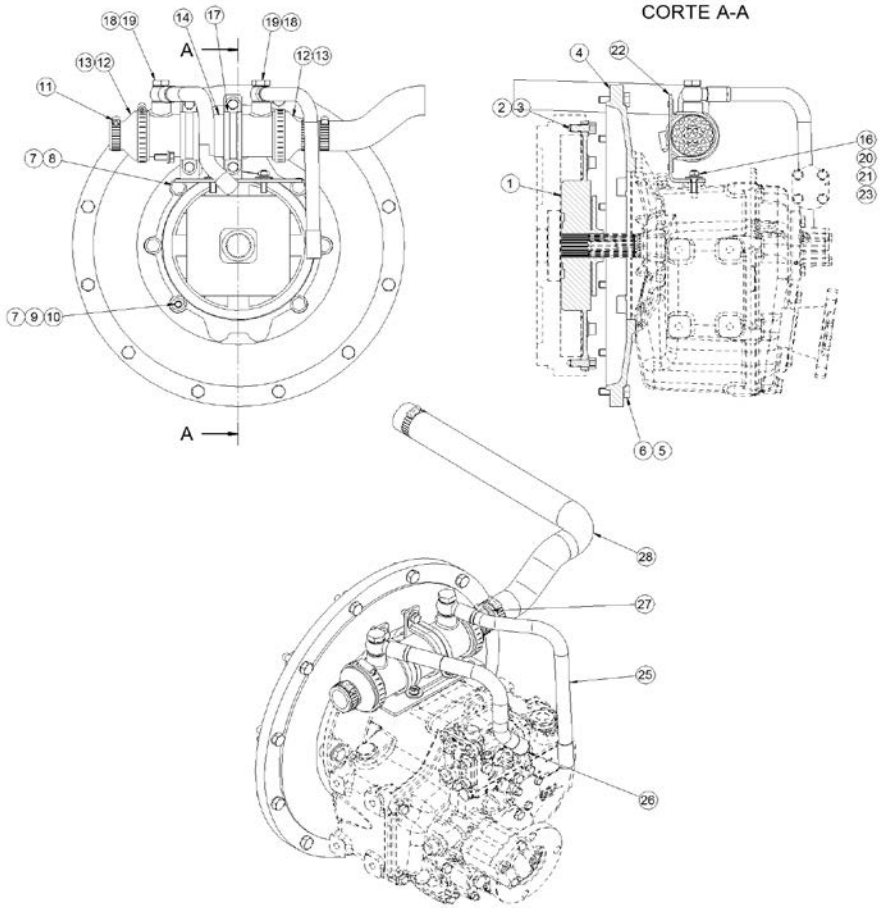

[NS] Not shown

Kit Gearbox

	17510225		Kit GearBox PRM-500		
FIG.	**REF.**	**QTY**	**DESCR.**	**FROM**	**UPTO**
1	24610022	1	Damper		
2	53033010	18	Washer GROWER DIN 127-10		
3	52103308	6	Bolt DIN 912 M10-25 8.8		
4	24230022	1	Adaptor Flange. PRM-302 SAE 3		
5	52102310	12	Bolt DIN 933 M10-35 8.8		
6	51051107	1	Pin DIN-94 1,6-16		
7	51030006	6	Washer DIN 125-6		
8	ALLPA.93	1	Coupling,cable	23/05/2017	
8	14719115	1	Coupling,cable		23/05/2017
9	52120006	2	Nut DIN 934 M6 8.8		
10	53033006	2	Washer GROWER DIN 127-6		
11	12119000	1	Assy Bracket,morse control		
12	16519023	1	Bracket,morse rev.PRMINI-302/402		
13	52102157	2	Bolt DIN 933 M6-20 8.8		
14	16512050	1	Oil Cooler,bracket		
15	51083060	2	Clamp "P" 59-63		
16	54082025	5	Clamp DIN 3017 25-40/12 W4		
17	15312007	2	Water Cooler Cover		
18	54082050	2	Clamp DIN 3017 50-70/12 W4		
19	14712051	1	Cooler,oil		
20	57000375	4	Washer 17-22-1,5		
21	14712015	2	Bolt,Coupling pipe oil		
22	18011020	1	Pipe		
23	15212022	1	Elbow	15/02/2017	
23	15312009	1	Elbow		14/02/2017
24	18512022	2	Pipe		
NS	M87503040	1	Water Intake Hose (HQ) D. 30-38 [NS]		
NS	24260001	1	Reducing Sleeve 3/8-1/2 [NS]		
NS	24260002	1	Reducing Sleeve 3/8-3/4 [NS]		
NS	24260003	1	Tenon Red. 1/2-3/8 [NS]		
NS	51030008	4	Washer DIN 125-8 [NS]		
NS	52102257	4	Bolt DIN 933 M8-20 8.8 [NS]		
NS	52120008	4	Nut DIN 934 M8 8.8 [NS]		
NS	52301309	2	Bolt DIN 931 W7/16-30 8.8 [NS]		
NS	53033008	4	Washer GROWER DIN 127-8 [NS]		

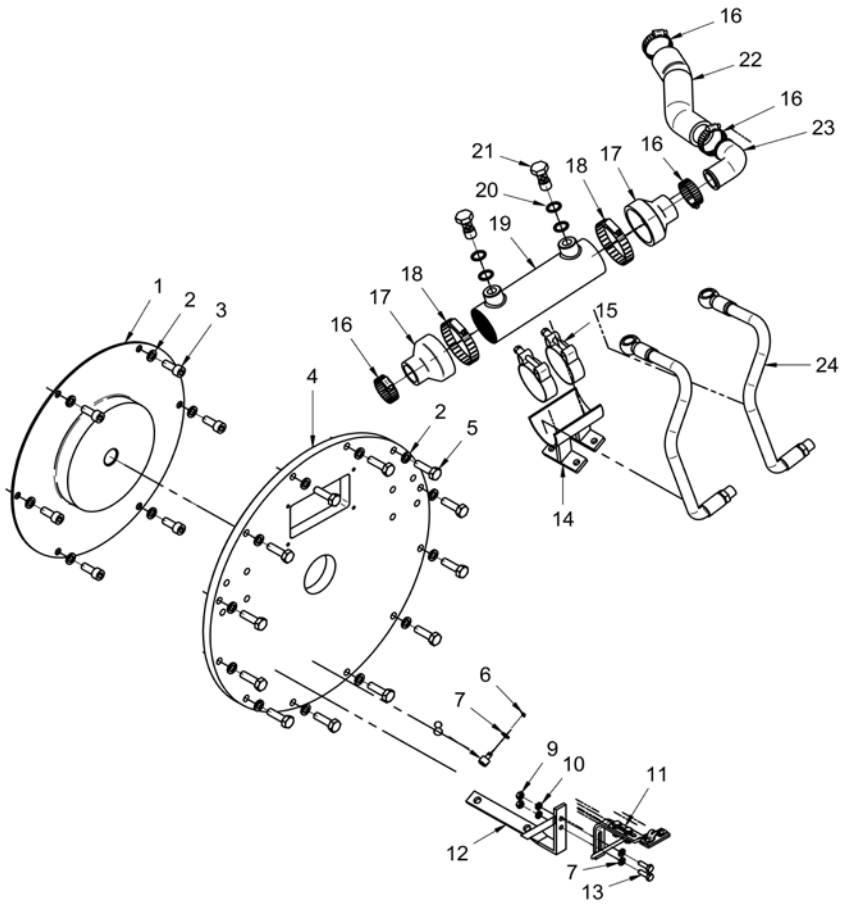

[NS] Not shown

Kit Gearbox

17510225			Kit GearBox PRM-500		
FIG.	**REF.**	**QTY**	**DESCR.**	**FROM**	**UPTO**
NS	53033011	2	Washer GROWER DIN 127-11 [NS]		
NS	53033012	8	Washer GROWER DIN 127-12 [NS]		
NS	56000083	1	Washer 21-26-1,5 [NS]		
NS	58088281	2	Pastic Cable Zip Tie [NS]		

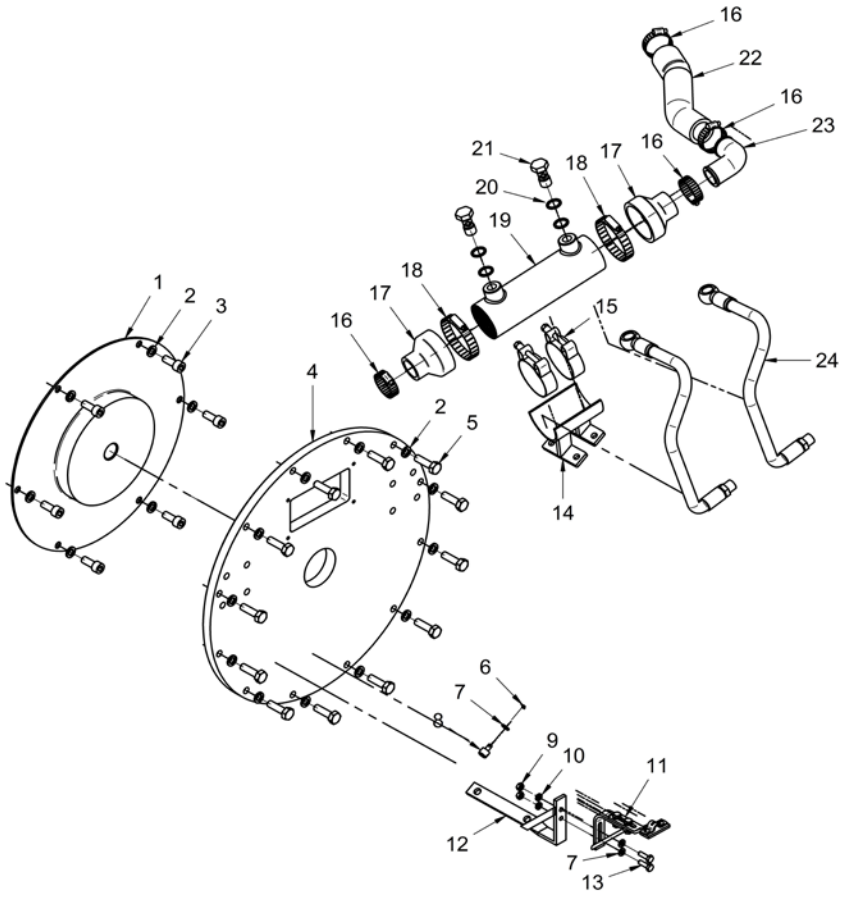

Kit Gearbox

	17910240		Kit Bobtail		
FIG.	REF.	QTY	DESCR.	FROM	UPTO
1	14711026	1	Hose Nº 3		
2	53033006	1	Washer GROWER DIN 127-6		
3	13817011	1	Bracket		
4	59071452	2	Clamp 1 42/15 W1		
5	51030006	1	Washer DIN 125-6		
6	52102157	1	Bolt DIN 933 M6-20 8.8		
7	52120006	1	Nut DIN 934 M6 8.8		
8	52102161	1	Bolt DIN 933 M6-40 8.8		
9	51031006	1	Washer DIN 9021 6		
10	13817118	1	Spacer 8,5x20x28		
NS	M87503242	1	Water Intake Hose (HQ) D. 32-42 [NS]		

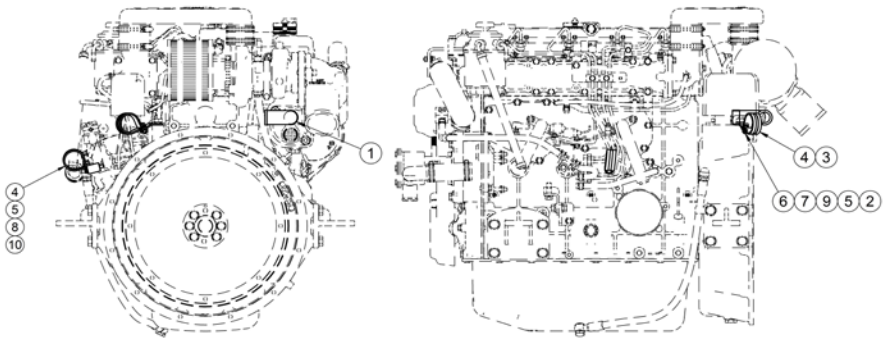

[NS] Not shown

	17417093		Kit 2nd Alternator 28V/55A		
FIG.	REF.	QTY	DESCR.	FROM	UPTO
1	17410102	1	Pulley 4A D138 (S)		
2	17417027	1	Alt. 28V/55A Mahle	16/03/2016	
3	17417022	1	Pulley		
4	17417092	1	Bracket Alternator		
5	17117109	1	Belt Type SPAX 850	24/01/2017	
5	17417104	1	Belt Type SPAX 807		23/01/2017
6	51030010	1	Washer DIN 125-10		
7	51030012	2	Washer DIN 125-12		
8	52101376	1	Bolt DIN 931 M12-130 8.8		
9	52102309	1	Bolt DIN 933 M10-30 8.8		
10	52102361	4	Bolt DIN 933 M12-40 8.8		
11	52120010	1	Nut DIN 934 M10 8.8		
12	52120012	1	Nut DIN 934 M12 8.8		
13	53033012	1	Washer GROWER DIN 127-12		
14	17410001.1	1	Front Bracket		

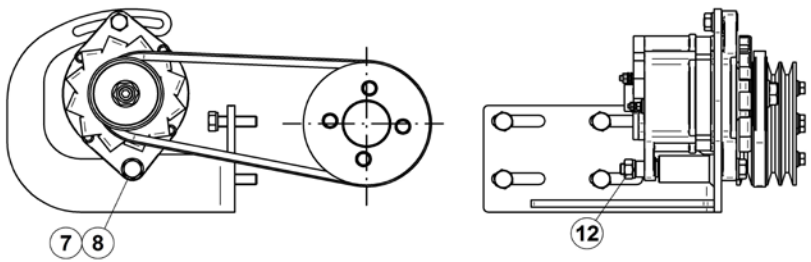

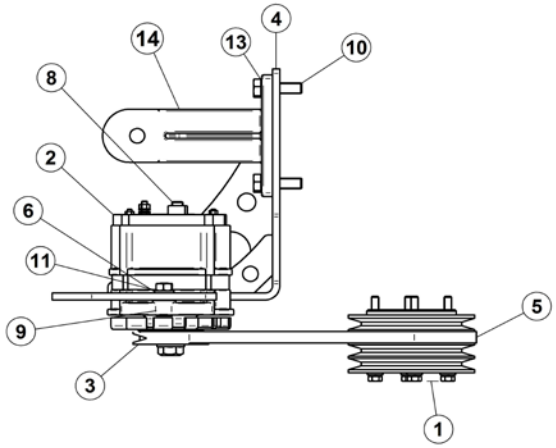

	17417097		Kit 2nd Alternator 14V/95A		
FIG.	REF.	QTY	DESCR.	FROM	UPTO
1	17410102	1	Pulley 4A D138 (S)		
2	17417098	1	Bracket Alternator		
3	53033012	4	Washer GROWER DIN 127-12		
4	52102362	4	Bolt DIN 933 M12-45 8.8		
5	17410001.1	1	Front Bracket		
6	51030010	1	Washer DIN 125-10		
7	52101325	1	Bolt DIN 931 M10-120 8.8		
8	51030008	2	Washer DIN 125-8		
9	52101261	1	Bolt DIN 931 M8-40 8.8		
10	53033008	1	Washer GROWER DIN 127-8		
11	52120008	1	Nut DIN 934 M8 8.8		
12	17417105	1	Belt Type XPA 882		
13	17117025	1	Alt. 14V/95A Mahle	13/04/2016	
14	17217005	1	Spacer 8,5X25X8,5		
15	17117016.7	1	Pulley		
16	17417025	1	Spacer 13.5x10.2x11	09/09/2015	

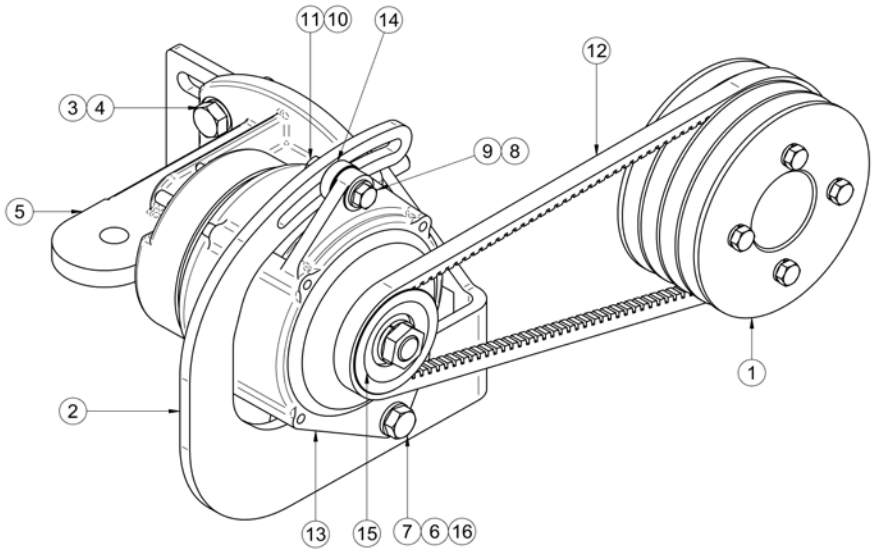

	17417100		Kit 2nd Alternator 28V/140A		
FIG.	REF.	QTY	DESCR.	FROM	UPTO
1	17417101	1	Alternator, Bracket		
2	17110102	1	Pulley 2A (S)		
3	17417102	1	Alternator, Bracket		
4	17417106	1	Alt. 28V 140A Mahle	14/06/2016	
5	53033010	4	Washer GROWER DIN 127-10		
6	52101369	8	Bolt DIN 931 M12-80 8.8		
7	51030010	8	Washer DIN 125-10		
8	52120010	4	Nut DIN 934 M10 8.8		
9	52102310	4	Bolt DIN 933 M10-35 8.8		
10	53033012	3	Washer GROWER DIN 127-12		
12	51030012	3	Washer DIN 125-12		
13	52120012	3	Nut DIN 934 M12 8.8		
14	54102365	2	Bolt DIN 933 M 12-60 INOX		
15	52102360	1	Bolt DIN 933 M12-35 8.8		
16	52120014	2	Nut DIN 934 M14 8.8		
17	17417104	2	Belt Type SPAX 807		

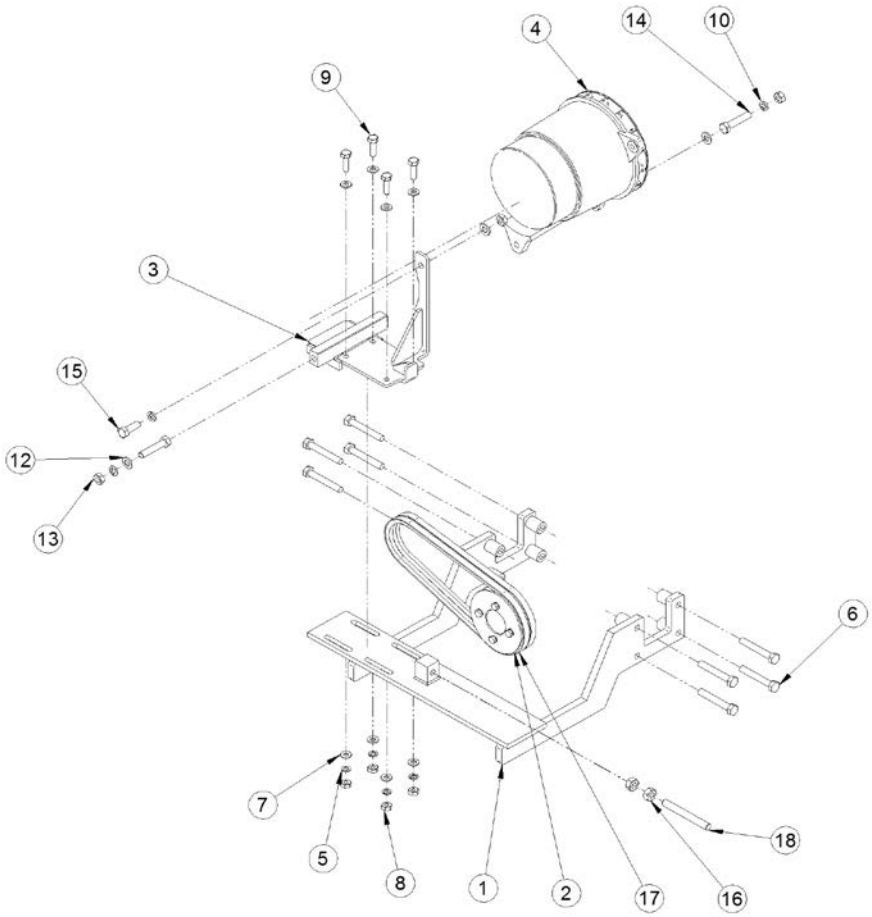

17817200			Kit Wire Earth Isolated 12V SM-82/94		
FIG.	REF.	QTY	DESCR.	FROM	UPTO
	60978102	1	SVT 30 SM-82/94 Panel Isolated	25/10/2017	
1	19017113	1	Relay 12 V, Earth Isolated		
2	17817002	1	Bracket		
3	51030006	4	Washer DIN 125-6		
4	52102155	2	Bolt DIN 933 M6-12 8.8		
5	60900999.1	2	Connection M14X1,5 5/8" EXA.19 L=25		
6	60900972	1	High Coolant, 2 Poles		
7	60900982	1	Temperature SENDER		
8	56000069	2	Washer 14-20-1,5		
9	56000073	2	Copper Washer 16-23-1,5		
10	60900987	1	Sender, Oil Press.		
11	60900978	1	Switch, Oil Press		
12	17427002.1	1	Bracket, Alternator		
13	17117011	2	Bracket Bakelite Bushing		
14	17117012	2	Tensor Bakelite Bushing		
15	17427007.1	1	Plate,Adjusting		
16	52102259	1	Bolt DIN 933 M8-30 8.8		
17	51031008	1	Washer DIN 9021 8		
18	15119015	1	CABLE Holder Ball		
19	52120006	1	Nut DIN 934 M6 8.8		
20	14419023	1	Ball JOINT		
21	13819001	1	Clamp		
22	54102109	2	Bolt DIN 933 M5-25 INOX.		
23	51030005	3	Washer DIN 125-5		
24	52120005	2	Nut DIN 934 M5 8.8		
25	60900091	1	MICRO Relay 12V 12-20	25/10/2017	
26	52102104	1	Bolt DIN 933 M5-10 8.8	25/10/2017	
NS	18525200	1	Stop SOLENOID (ETS)12V [NS]		
NS	18525202	1	Spring Valve Pump [NS]		
NS	54128005	1	Nut DIN 439 M5 INOX [NS]	10/11/2017	
NS	60900152	1	Wire [NS]		
NS	60900157	1	Wire [NS]		
NS	60900199	1	Wire [NS]		
NS	60978202R	1	SM-82/94 Elect. Wiring Earth Isolat. SVT [NS]		

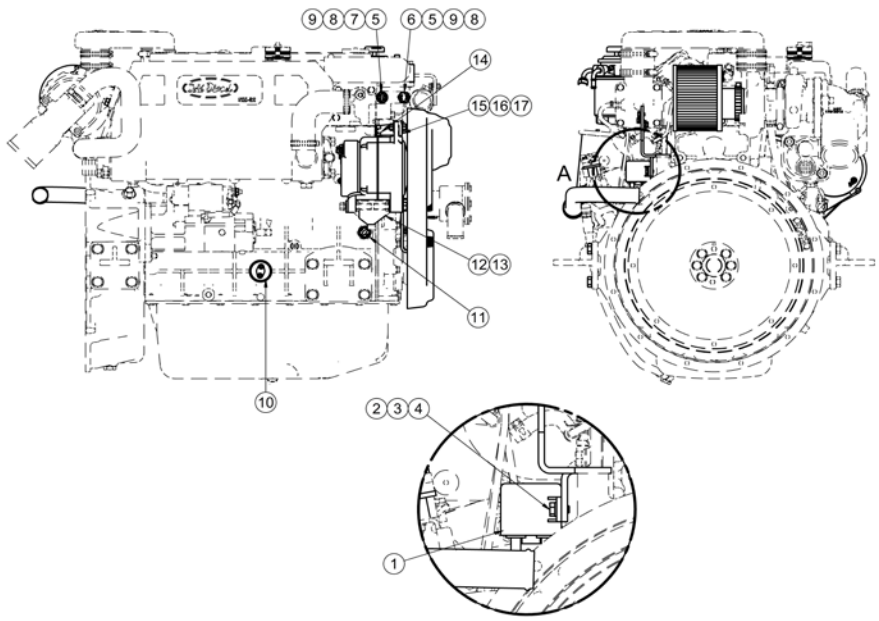

DETALLE A

[NS] Not shown

Other Kits

	13812010		Pressure Gauge Kit 10 BAR		
FIG.	**REF.**	**QTY**	**DESCR.**	**FROM**	**UPTO**
1	13812013.1	1	Pressure Tap		
2	13812011	1	Flexible Hose F-M G1/4-M16x2		
3	13812012	1	Pressure Gauge 0-10 bar		
4	13812014	1	Protective Rubber		

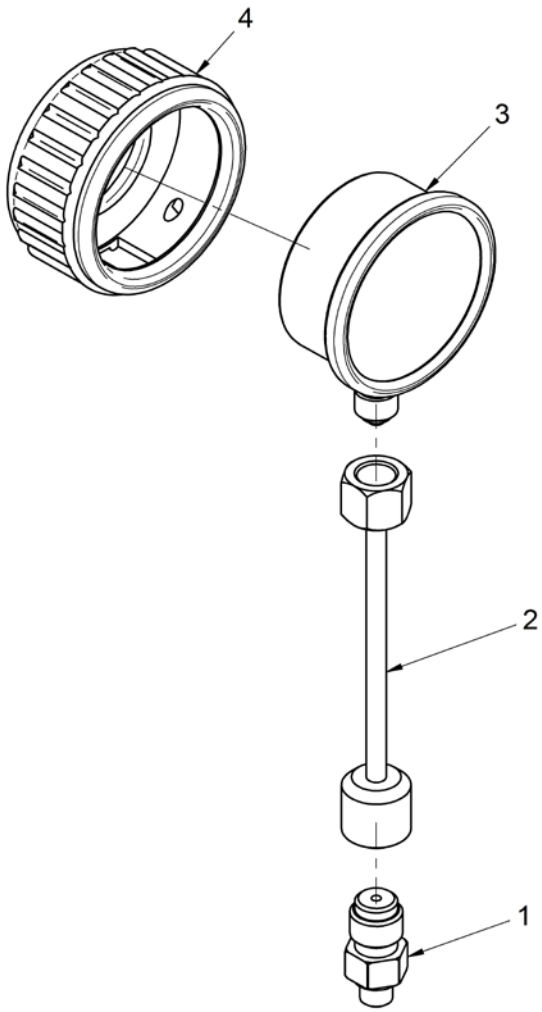

Other Kits

17012093			Kit Trolling Valve for TM-93/A		
FIG.	REF.	QTY	DESCR.	FROM	UPTO
1	24810050	1	Trolling Valve TM-93		
2	24810913	1	Clamp,CABLE		
3	51030005	2	Washer DIN 125-5		
4	57000375	6	Washer 17-22-1,5		
5	14712015	3	Bolt,Coupling pipe oil		
6	14719115	2	Coupling,cable		
7	51030006	4	Washer DIN 125-6		
8	51051107	2	Pin DIN-94 1,6-16		
NS	17112024	2	Pipe, rev.oil Cooler [NS]		

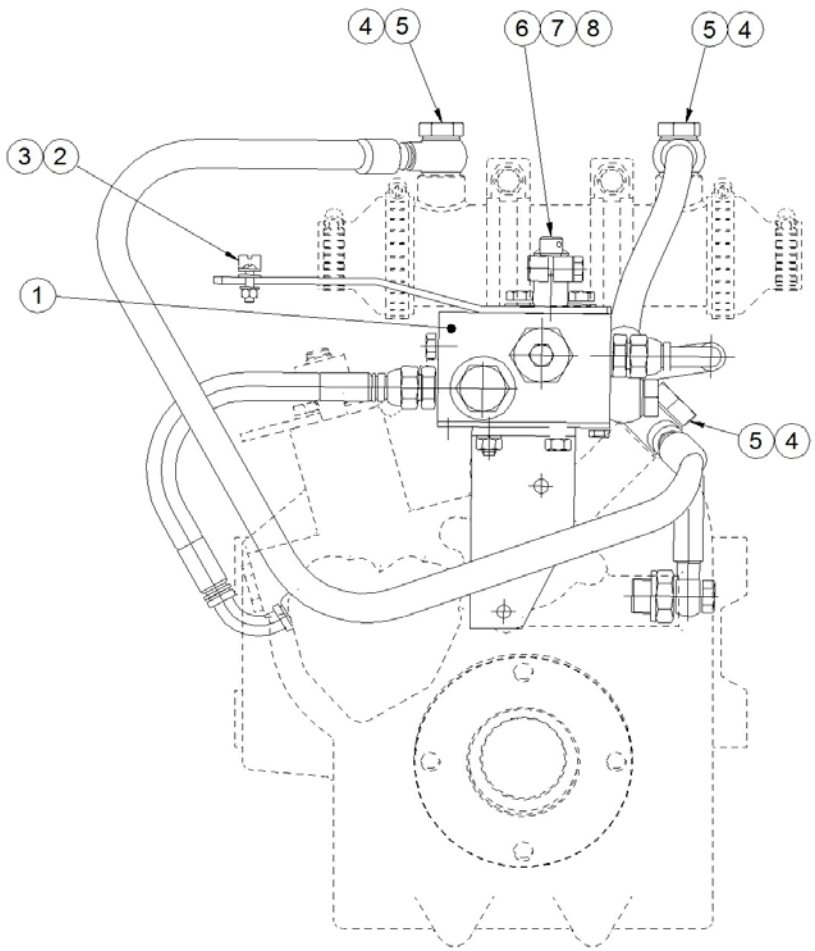

[NS] Not shown

17012345			Kit Trolling Valve for TM-345/A		
FIG.	REF.	QTY	DESCR.	FROM	UPTO
1	24850050	1	Trolling Valve TM-345A		
2	17012024	1	Pipe		
3	17512017	1	Pipe, rev.oil Cooler		
4	14712015	2	Bolt,Coupling pipe oil		
5	57000375	4	Washer 17-22-1,5		
6	24810913	1	Clamp,CABLE		
7	14719115	2	Coupling,cable		
8	51051107	2	Pin DIN-94 1,6-16		
9	51030006	1	Washer DIN 125-6		
10	51030005	2	Washer DIN 125-5		

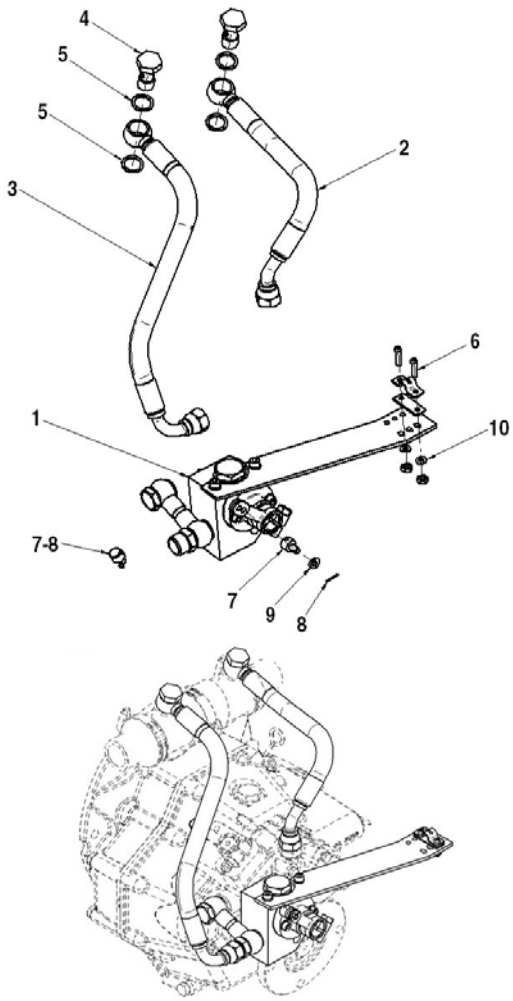

Other Kits

	17211150		Boiler Kit (S)		
FIG.	**REF.**	**QTY**	**DESCR.**	**FROM**	**UPTO**
1	17124053	2	Joint		

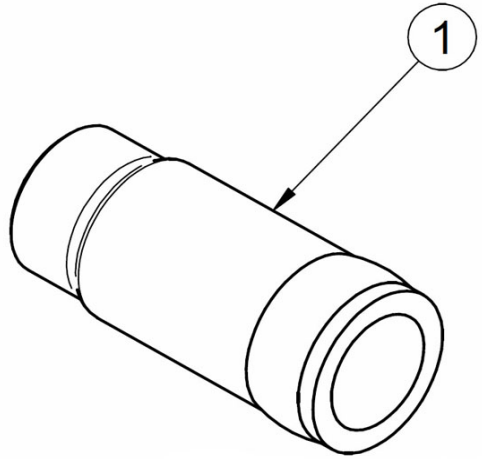

18712485			Kit Trolling Valve for TM-485A1		
FIG.	**REF.**	**QTY**	**DESCR.**	**FROM**	**UPTO**
1	24870050	1	Trolling Valve TM-485A		
2	24810913	1	Clamp,CABLE		
3	51030005	2	Washer DIN 125-5		
4	14719115	1	Coupling,cable		
5	51051107	1	Pin DIN-94 1,6-16		

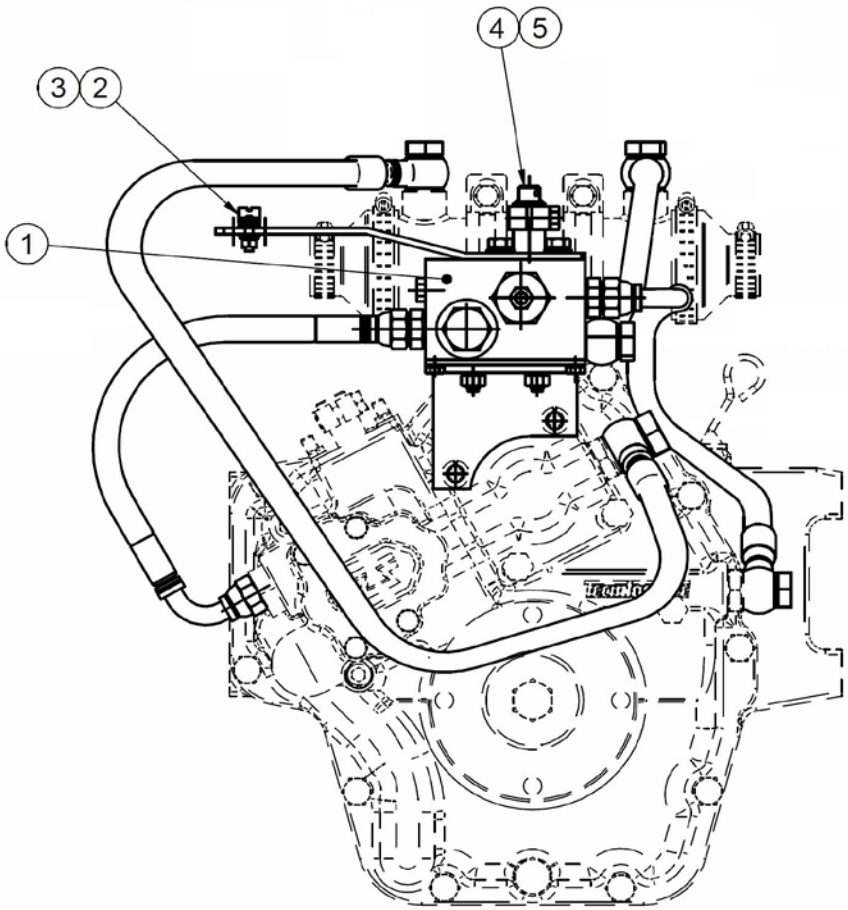

Other Kits

19012170			Kit Trolling Valve for TM-170/A		
FIG.	**REF.**	**QTY**	**DESCR.**	**FROM**	**UPTO**
1	24820050	1	Trolling Valve TM-170		
2	24810913	1	Clamp,CABLE		
3	51030005	2	Washer DIN 125-5		
4	57000375	4	Washer 17-22-1,5		
5	14712015	2	Bolt,Coupling pipe oil		
6	14719115	2	Coupling,cable		
7	51030006	4	Washer DIN 125-6		
8	51051107	2	Pin DIN-94 1,6-16		
9	17112024	2	Pipe, rev.oil Cooler		

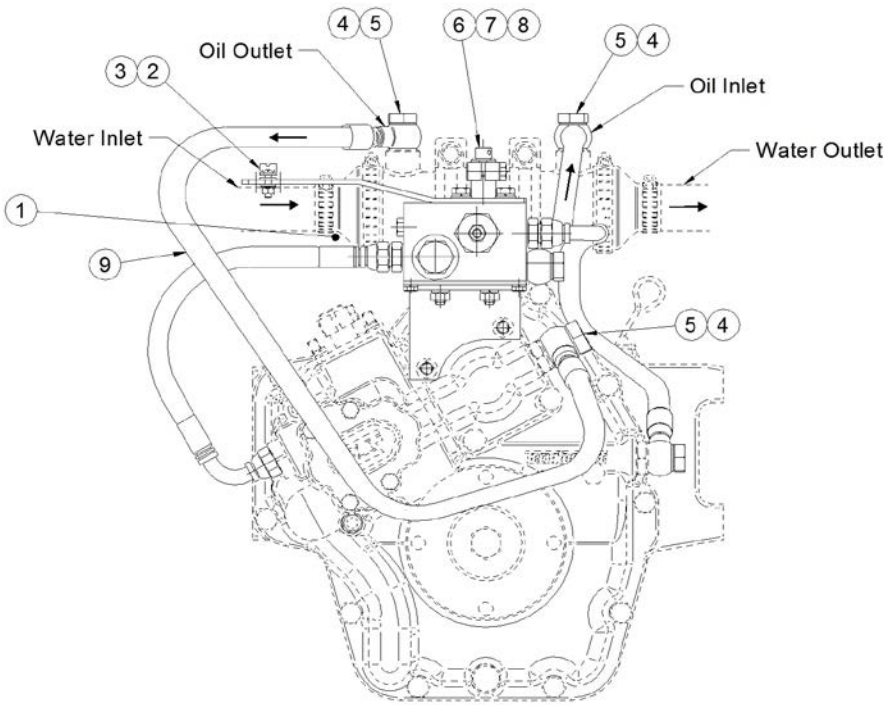

Exhaust System

	17813017		Exhaust Flange (S)		
FIG.	**REF.**	**QTY**	**DESCR.**	**FROM**	**UPTO**
1	17813017.1	1	Exhaust Flange		

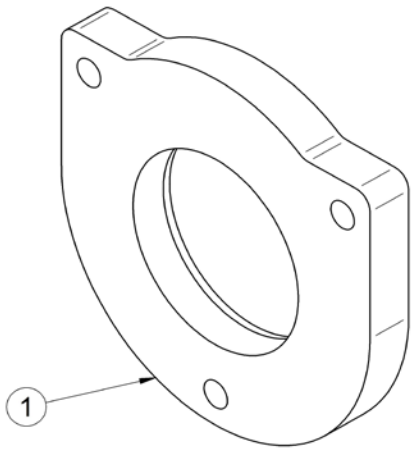

Exhaust System

17813115			Kit Dry Exhaust With Flexible Pipe (S)		
FIG.	REF.	QTY	DESCR.	FROM	UPTO
1	51068060	1	Flange		
2	19013017	1	Expansion,compensator		
3	51066060	1	KNEE 90 FIG. 6002/5 2"		
4	17813017.1	1	Exhaust Flange		

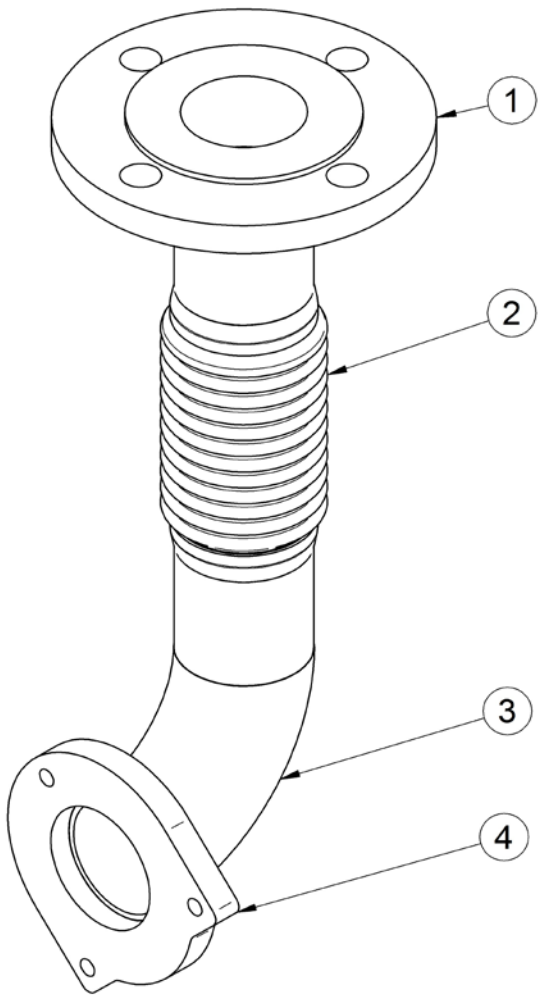

Exhaust System

17813118			Kit Dry Exh. Flexible Pipe & Silencer(S)		
FIG.	REF.	QTY	DESCR.	FROM	UPTO
1	17813115	1	Kit Dry Exhaust With Flexible Pipe (S)		
2	19013020	1	Gasket		
3	17413018	1	Exhaust Muffler		
4	52101463	4	Bolt DIN 931 M16-50 8.8		
5	53033016C	4	Washer	10/12/2009	
6	52120016	4	Nut DIN 934 M16 8.8		
7	51030016	4	Washer DIN 125-16		
8	17413019	1	RAINCover		

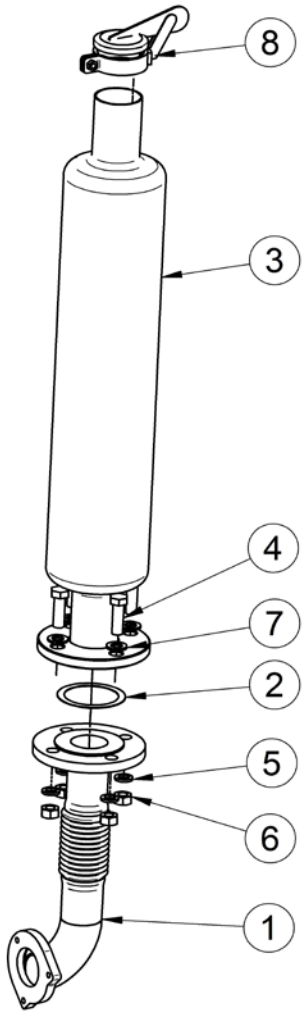

Power Take-off Pulley

	17110101		Pulley 2B (S)		
FIG.	**REF.**	**QTY**	**DESCR.**	**FROM**	**UPTO**
1	17110101.2	1	Pulley 2B		
2	53033008	4	Washer GROWER DIN 127-8		
3	52101265	4	Bolt DIN 931 M8-60 8.8		

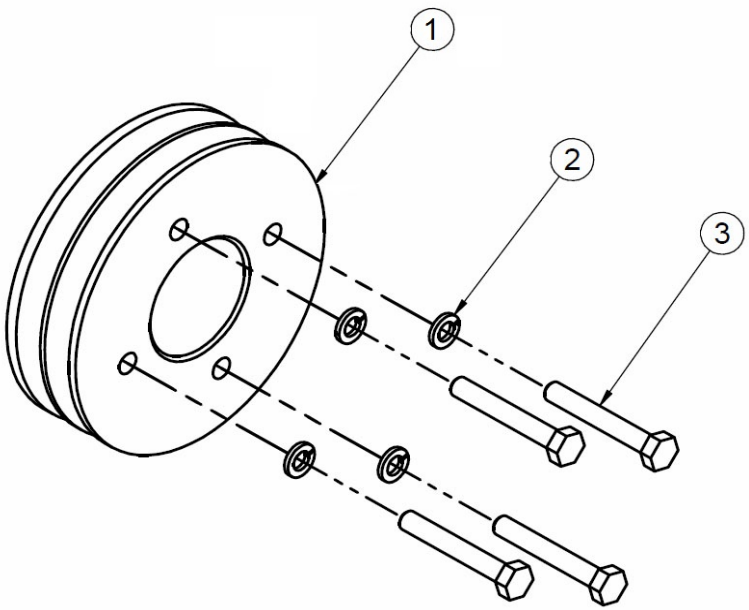

Power Take-off Pulley

	17110102		Pulley 2A (S)		
FIG.	**REF.**	**QTY**	**DESCR.**	**FROM**	**UPTO**
1	17110102.3	1	Pulley 2A		
2	53033008	4	Washer GROWER DIN 127-8		
3	52101264	4	Bolt DIN 931 M8-55 8.8		

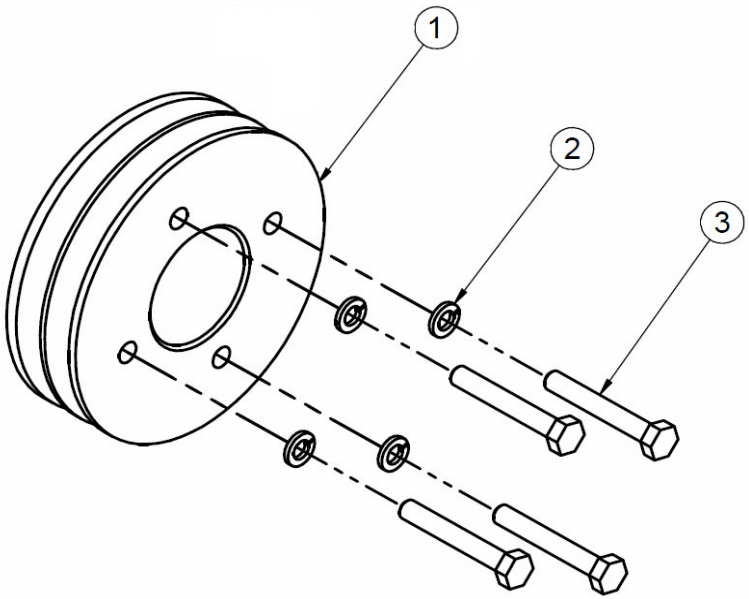

Power Take-off Pulley

	17410102		Pulley 4A D138 (S)		
FIG.	**REF.**	**QTY**	**DESCR.**	**FROM**	**UPTO**
1	17410102.1	1	Pulley 4A		
2	53033008	4	Washer GROWER DIN 127-8		
3	52101270	4	Bolt DIN 931 M8-85 8.8		

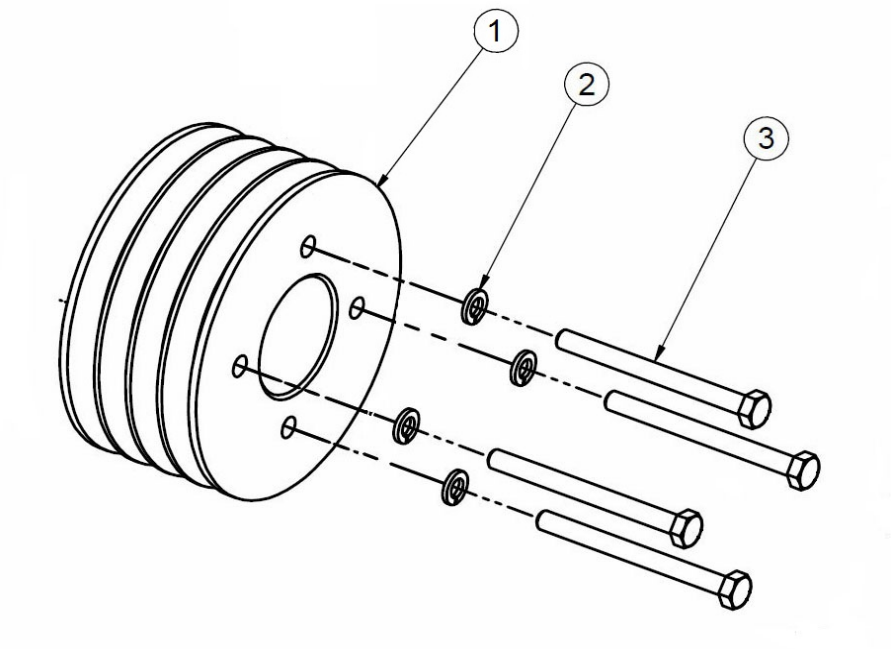

Power Take-off Pulley

	17410125		Kit Power Take-off D40 (S)		
FIG.	**REF.**	**QTY**	**DESCR.**	**FROM**	**UPTO**
1	17410125.1	1	PTO Shaft		
2	53033008	4	Washer GROWER DIN 127-8		
3	52102260	4	Bolt DIN 933 M8-35 8.8		
4	60500064	1	Butt Washer		
5	53033010	10	Washer GROWER DIN 127-10		
6	52102309	1	Bolt DIN 933 M10-30 8.8		
7	40040086	1	Flange Ø 40 Shaft Key		

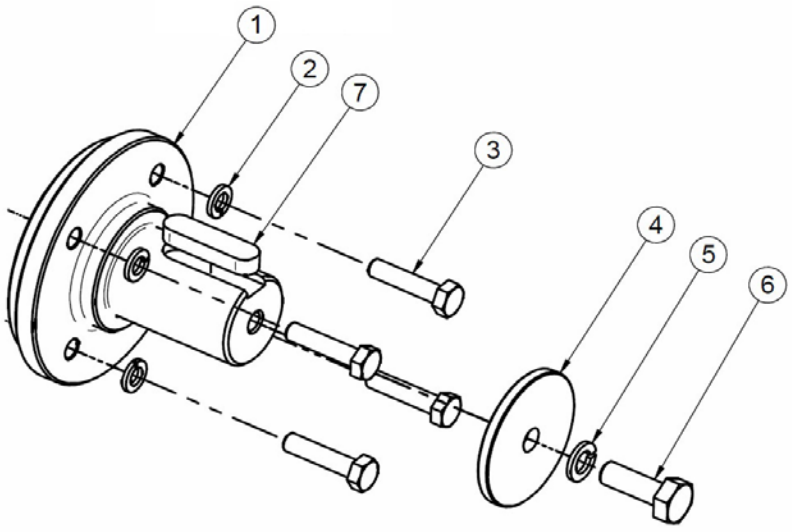

Power Take-off Pulley

	17410126		Kit Pulley & Power Take-off 2A		
FIG.	REF.	QTY	DESCR.	FROM	UPTO
1	17110102.1	1	2A Pulley		
2	17410125	1	Kit Power Take-off D40 (S)		
3	53033008	4	Washer GROWER DIN 127-8		
4	60500064	1	Butt Washer		
5	53033010	1	Washer GROWER DIN 127-10		
6	52102309	1	Bolt DIN 933 M10-30 8.8		
7	40040086	1	Flange Ø 40 Shaft Key		
8	52101266	4	Bolt DIN 931 M8-65 8.8		

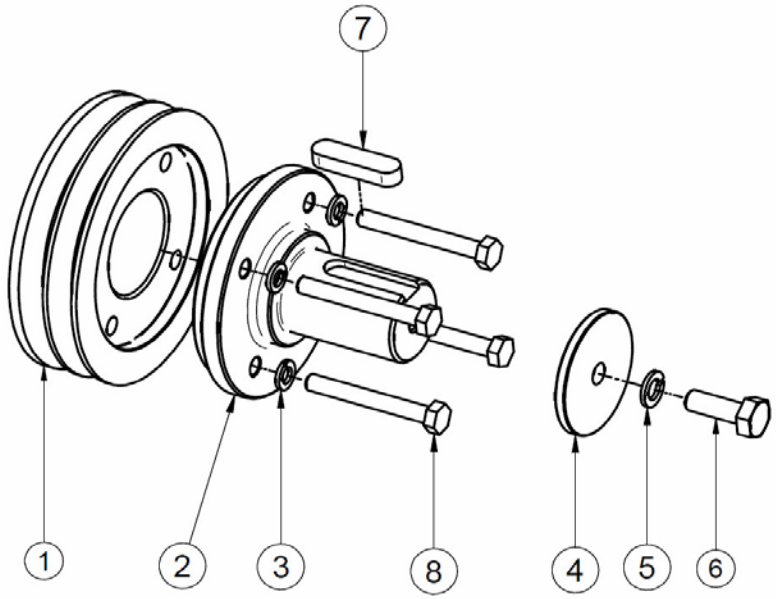

Power Take-off Pulley

	17410128		Kit Pulley & Power Take-off 2B		
FIG.	REF.	QTY	DESCR.	FROM	UPTO
1	17110101.1	1	Pulley 2B for PTO Shaft		
2	17410127	1	PTO Shaft		
3	40040086	1	Flange Ø 40 Shaft Key		
4	60500064	1	Butt Washer		
5	53033008	4	Washer GROWER DIN 127-8		
6	52101268	4	Bolt DIN 931 M8-75 8.8		
7	53033010	1	Washer GROWER DIN 127-10		
8	52102309	1	Bolt DIN 933 M10-30 8.8		

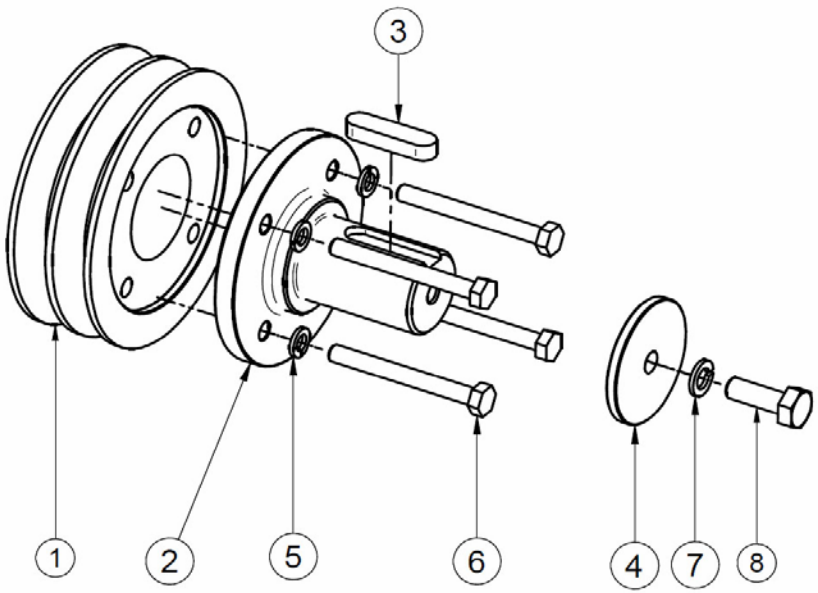

Power Take-off Pulley

	17510104		Pulley 4B (S)		
FIG.	**REF.**	**QTY**	**DESCR.**	**FROM**	**UPTO**
1	17510104.1	1	Pulley 4B		
2	53038008	4	Washer DIN 6798-A 8		
3	52101264	4	Bolt DIN 931 M8-55 8.8		

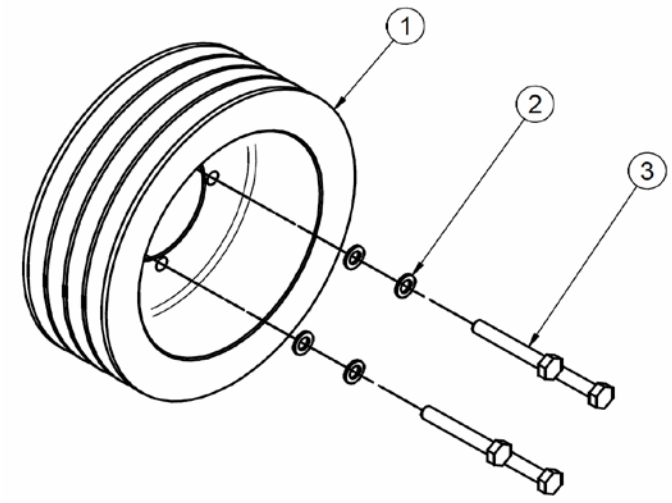

Power Take-off Pulley

	17510106		Pulley 4A D195 (S)		
FIG.	**REF.**	**QTY**	**DESCR.**	**FROM**	**UPTO**
1	17510106.1	1	Pulley 4A		
2	53038008	4	Washer DIN 6798-A 8		
3	52101264	4	Bolt DIN 931 M8-55 8.8		

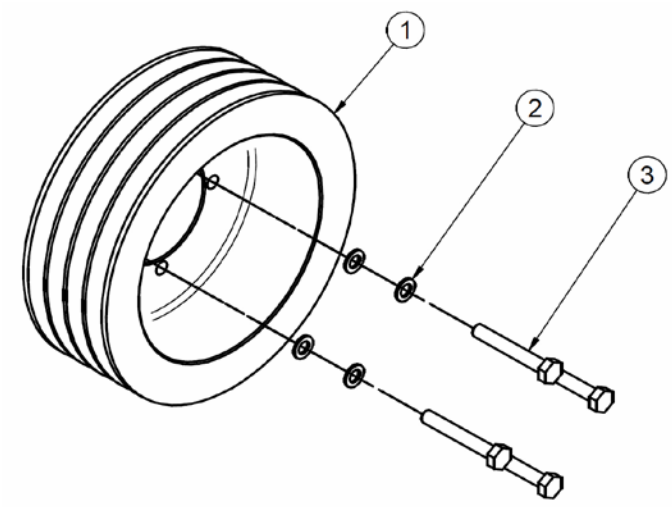

Kit Keel Cooling

17811200			Kit Keel Cooling & Dry Exh.- TM GearBox		
FIG.	REF.	QTY	DESCR.	FROM	UPTO
1	18011103	1	Cover,Water Cooler		
2	18011008	2	O-Ring D. 72X3		
3	17813017	1	Exhaust Flange (S)		
5	52102258	1	Bolt DIN 933 M8-25 8.8		
6	53038008	1	Washer DIN 6798-A 8		
7	19411045	1	Pipe 42-54-90		
8	54082032	2	Clamp DIN 3017 32-50/12 W4		
9	17511015	1	Pipe		
10	54082025	3	Clamp DIN 3017 25-40/12 W4		
11	17420046	1	Cover,Gear Case		
12A	52101266	5	Bolt DIN 931 M8-65 8.8		
12B	53033008	5	Washer GROWER DIN 127-8		
13	59071383	1	Clamp TYP.1 38/15 W1		
14	51030006	1	Washer DIN 125-6		08/06/2017
15	52102106	1	Bolt DIN 933 M5-15 8.8		
16	18011102	1	Cover,Water Cooler		
17	13311005	1	Plug		
NS	M87503242	0	Water Intake Hose (HQ) D. 32-42 [NS] [VAR]		
NS	58088280	2	Pastic Cable Zip Tie [NS]		

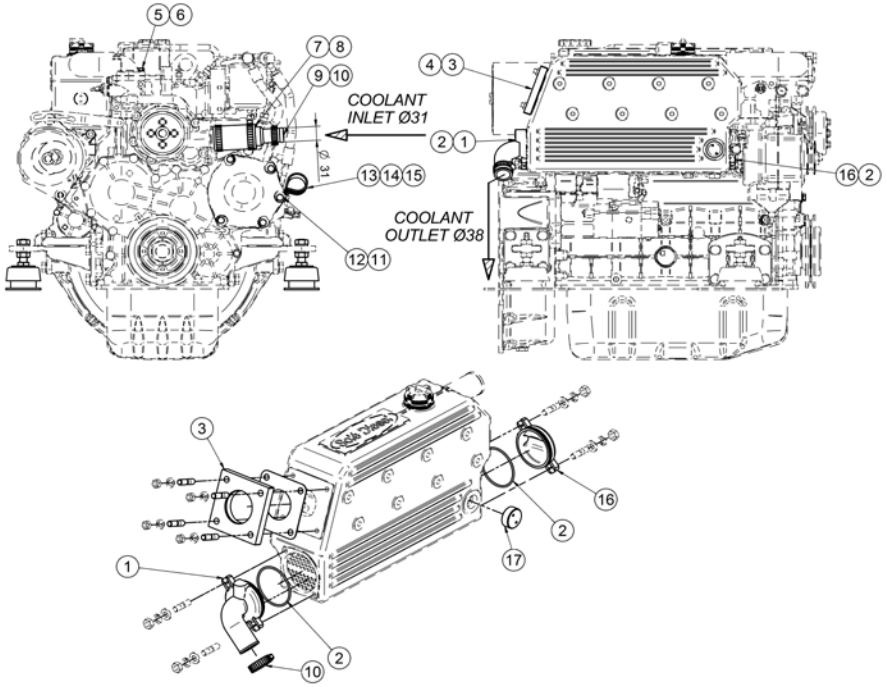

[NS] Not shown
[VAR] Variable according to repair

Kit Instrument Panel SVT

60910024			SVT 30 Panel 12V + Exh. Temp. Alarm Kit		
FIG.	**REF.**	**QTY**	**DESCR.**	**FROM**	**UPTO**
1	60900280	1	Exhaust Temperature Alarm Kit		
2	60910004	1	SVT 30 Panel 12V		

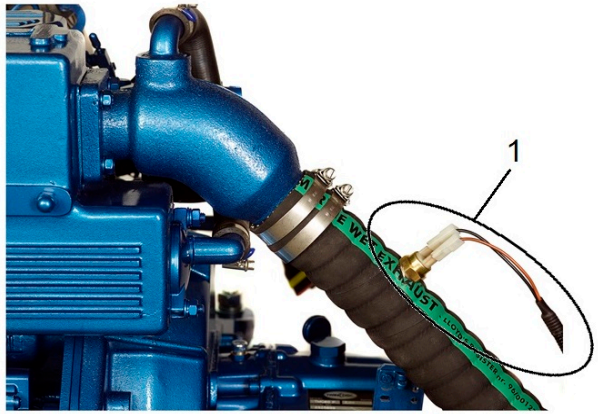

Kit Instrument Panel SVT

60910025			SVT 30 24V Panel + Exh. Temp. Alarm Kit		
FIG.	**REF.**	**QTY**	**DESCR.**	**FROM**	**UPTO**
1	60900280	1	Exhaust Temperature Alarm Kit		
2	60910005	1	SVT 30 24V Panel		

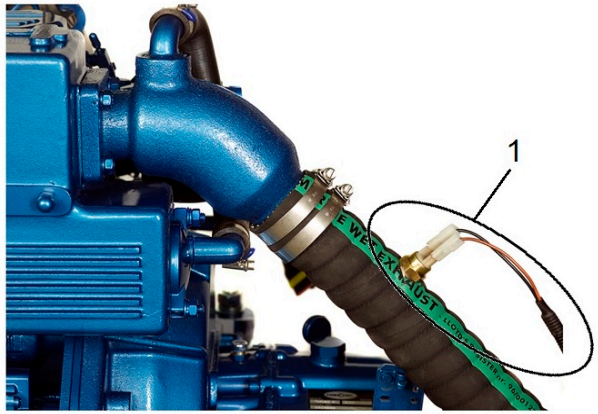

Kit Instrument Panel SVT

60978130			Kit 2nd Panel SVT 40 SM-82/94 12V		
FIG.	REF.	QTY	DESCR.	FROM	UPTO
1	60978100	1	SVT 30 SM-82/94 Panel		
2	60978131	1	SVT 40 SM-82/94 Panel		
3	60900210.2	1	T Double Panel DERIVATION		

Kits NMEA 2000 - one engine

	61478100		Kit SDC 2000 SM-82/94 12V		
FIG.	**REF.**	**QTY**	**DESCR.**	**FROM**	**UPTO**
1	61400200	1	Kit SDC 2000 24V Standard		
2	60900091	2	MICRO Relay 12V 12-20		

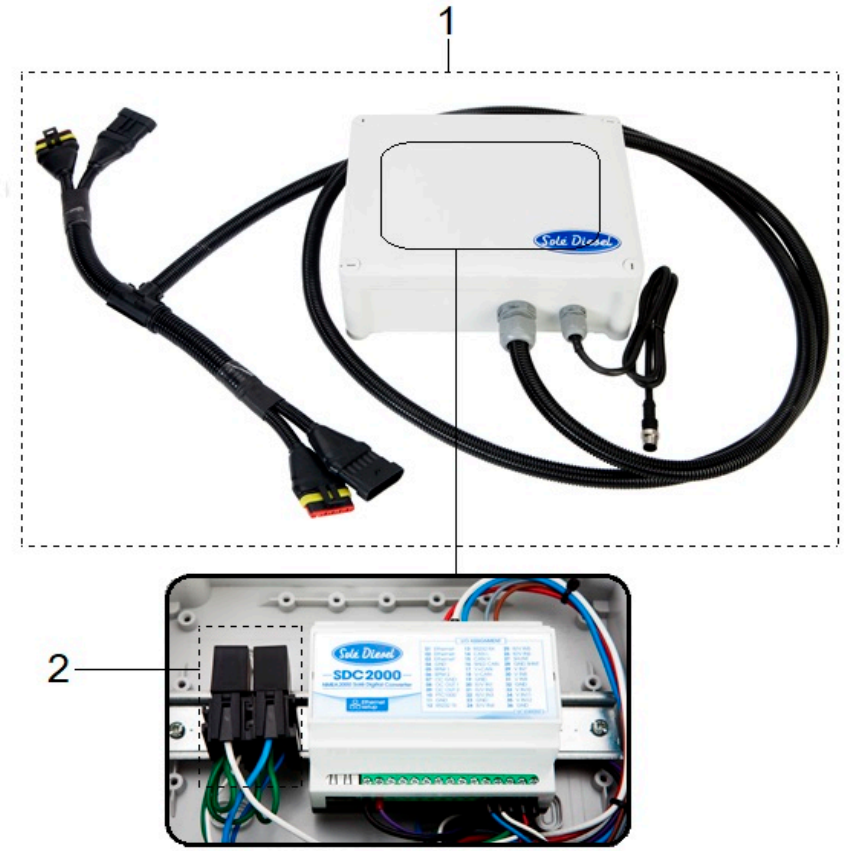

Kits NMEA 2000 - one engine
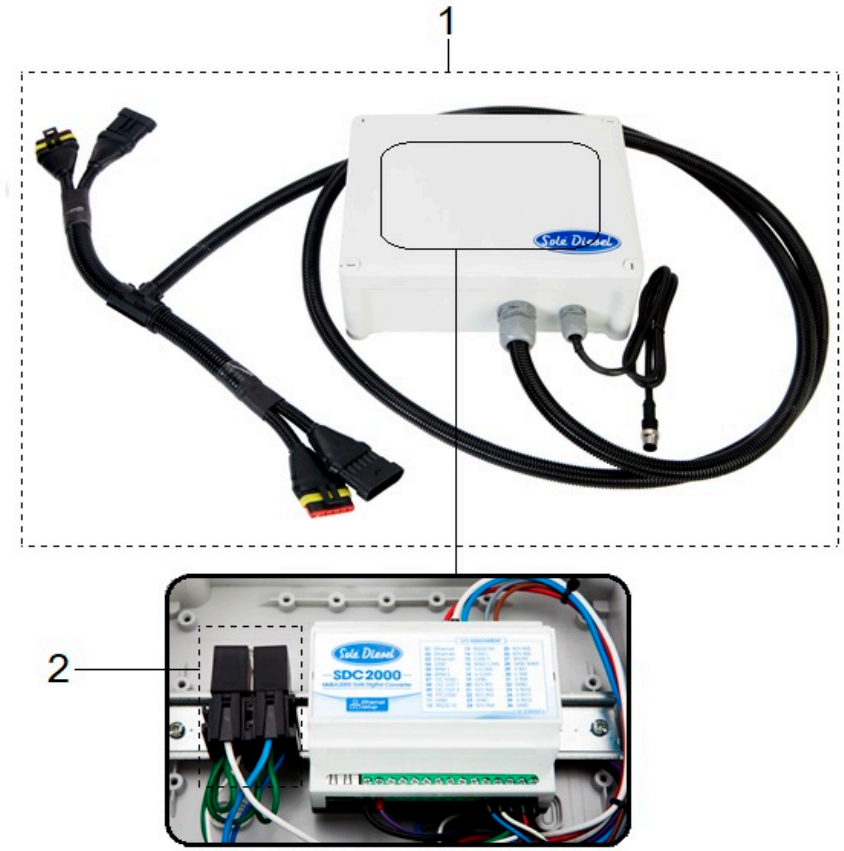
	61478200		Kit SDC 2000 SM-82/94 24V		
FIG.	**REF.**	**QTY**	**DESCR.**	**FROM**	**UPTO**
1	61400200	1	Kit SDC 2000 24V Standard		
2	60900092	2	MICRO Relay 24V 24-10