Solé Diesel

Engine SN-110

VERSION 2017-10

SPARE PARTS MANUAL

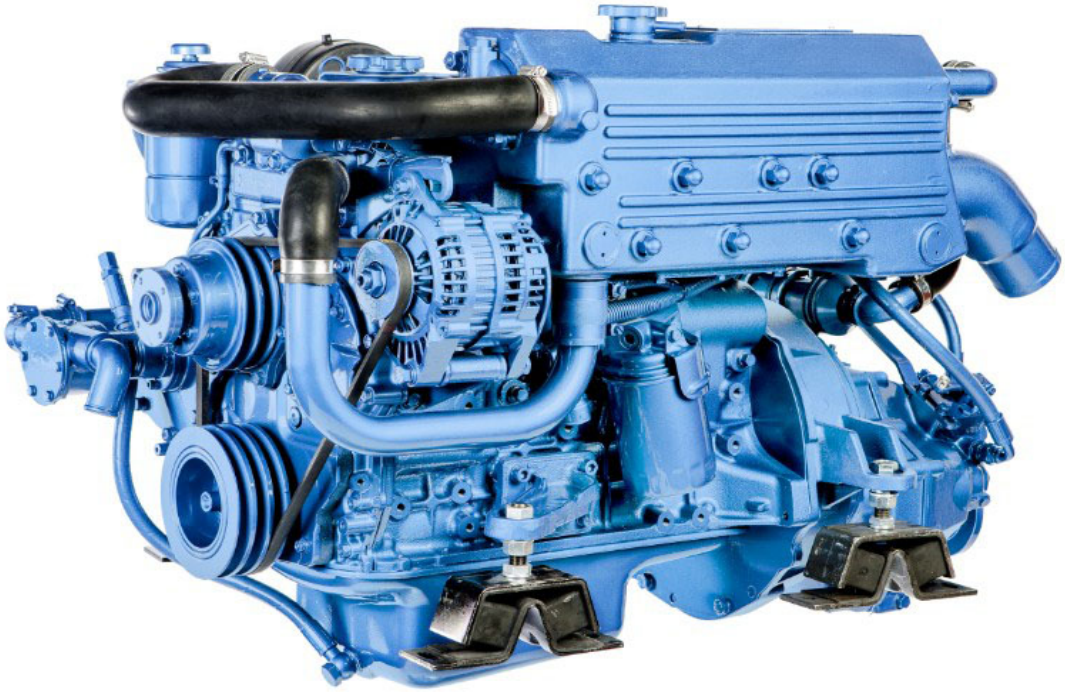

PARTS LIST CATALOGUE

NORMS TO PLACE AN ORDER:

For fast and more efficient service, please specify the following information on spare parts orders that must be preferably done by FAX or e-mail as specified below:

1- Engine model: As shown in identification plate

2- Engine serial number: As shown in identification plate and stamped on crankcase

3- Item description + part number + quantity required

Spare parts requests must be adressed to:

recambios@solediesel.com

Telf.: +34 93 775 44 05

Fax: +34 93 775 30 13

The components shown in the catalog have:

- Figure: Number by which they are represented in scheme
- Description: Trade name of the component
- Quantity: Total number of parts used in the assembly of the part represented (may differ from the total minimum quantities)

Hoses, indicates the total length in meters

The diagrams shown in this catalog of spare parts, have only the purpose to identify the piece in question, its representation is not meaningful and may differ from the actual piece.

In case of doubt, contact Solé Diesel, or your authorized dealer.

The parts i / or references in this catalog are subject to change without notice.

SOLÉ, S.A.

C-243b, Km, 2 - P.O. BOX 15

08760 Martorell (Barcelona) Spain

Download the latest version of this manual HERE

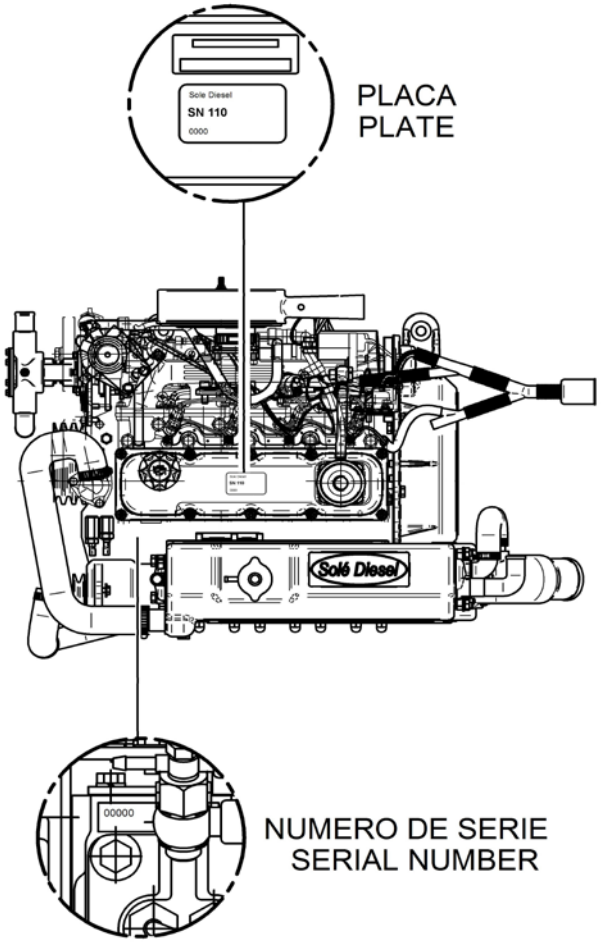

Contents

Engine Body
- Cylinder Head & Rocker Cover
- Timing Parts
- Timing Gear Case
- Cranckcase
- Piston & Connectiong Rod
- Crankshaft & Flywheel
- Oil Sysem
- Oil Pan & Pump
- Engine Brackets
- Bracket, Engine Control
- Oil Cooler

Inlet & Exhaust
- Inlet

Cooling System
- Water Pump
- Cooler Pipes
- Water Cooler

Fuel System
- Fuel Pipe
- Injection Nozzle
- Fuel Filter

12V Electrical System
- Kit Alternator 12V/70A
- Kit Alternator 14V/110A
- Kit Alt. 14V/95A
- Parts Starter
- 12V Electrical Wiring
- Panel SN-85/110 (SN-85 Nº < 717845)
- Panel SN-85/110 (SN-85 Nº > 717844)
- SVT 30 SN-110 Panel

Maintenance Kit
- Gasket Kit

Exhaust Elbows
- Kit Dry Exhaust With Flexible Pipe

Kit Assembly
- Centaflex CF-R Coupling Gear

Kit Gearbox
- Kit Z-Drive VOLVO 270/280/290 Z=10
- Kit Z-Drive VOLVO 280/290 Z=26
- Kit GearBox TM-93 Coupling CF-R
- Kit GearBox TM-345A Coupling CF-R
- Kit GearBox PRM-500 (Without Cooler)
- Kit Jet Castoldi-05 (With gears)
- Kit Jet Castoldi-05
- Kit GearBox ZF-45C Coupling CF-R
- Kit GearBox ZF-63 Coupling CF-R
- Kit GearBox BORG WARNER Coupling CF-R
- Kit GearBox TMC-260

Electrical System
- Kit 2nd Alternator 28V/55A
- Kit 2nd Alternator 14V/95A

Other Kits
- Kit Trolling Valve for TM-93
- Kit Trolling Valve for TM-345/A

Exhaust System
- Exhaust Flange (S)
- Kit Dry Exhaust Flexible Pipe & Silencer

Power Take-off Pulley
- Kit Pulley & Power Take-off 3A
- Kit Power Take-off D40
- Kit Power Take-off D30

Kit Keel Cooling
- Kit Refroid. Quille et Esc.Sec TM-93/345

Kit Instrument Panel SVT
- Kit 2nd Panel SVT 40 SN-85/110 12V

Kits NMEA 2000 - one engine
- Kit SDC 2000 SN-110 12V
- Kit SDC 2000 SN-110 24V

Engine Body

D_SN11_1_1			Cylinder Head & Rocker Cover		
FIG.	REF.	QTY	DESCR.	FROM	UPTO
1-11	18221001	1	Head Assy Cylinder		
2	18221061	4	Seat Valve,Intake		
3	18221062B	4	Seat Valve Exhaust +0,4		
3	18221062	4	Seat Valve,Exhaust STD		
3	18221062A	4	Seat Valve Exhaust +0,2		
4	18221002	8	Guide Valve		
5	18221016	4	CHAMBER Assy COMBUSTION		
6	18220022	7	Cap Sealing [NP]		
7	18220016	2	Plug		
8	18221014	3	Plug		
9	18221019	2	Plug		
10	18221018	4	PROTECTOR Nozzle		
11	18224012	4	Injector Washer [NP]		
11	18221015	4	Gasket		
13	18221005	1	CYL.Head Gasket GRADE 2: THICKNESS1.40MM		
13	18221004	1	CYL.Head Gasket GRADE 1: THICKNESS1.35MM		
13	18221006	1	CYL.Head Gasket GRADE 3: THICKNESS1.45MM		
14	18221013	18	Bolt,cylinder head		
15	18221023	2	Stud [NP]		
41	18221009	1	Cover, Valve		
42	18221010	1	Gasket Cover		
45	18221059	10	Rocker Cover Washer		
46	18221058	10	Washer		
47	18221012	10	Bolt Cover		
48-49	18221003	1	Cap Oil FILLER		
49	18221017	1	Gasket Oil Filler		
51	18227017	4	Plug Glow		
52	18227018	1	CABLE Assy		
53	18227019	4	Nut,flange-glow plug [NP]		
61	18221011	1	Support Engine		
62	18221008	2	Bolt		
63	18227007	1	BRACE Generator [NP]		
64	18227005	2	Bolt		
65	18221069	2	Washer		
71	18221066	1	Valve Assy Air [NP]		

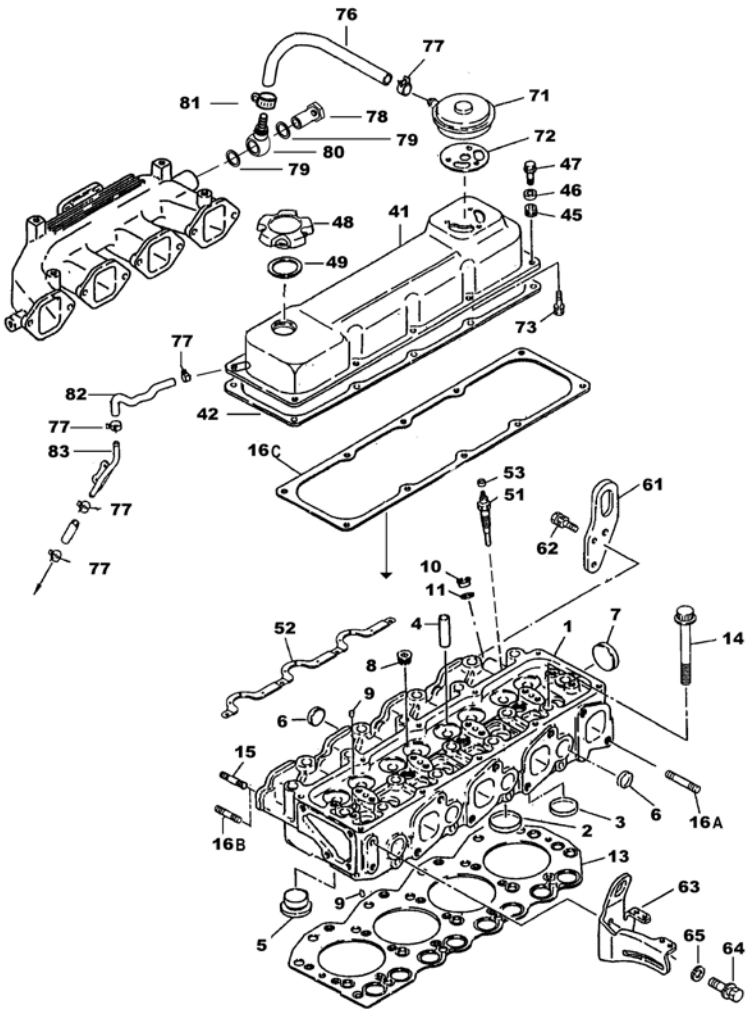

[NP] Not provided
[NS] Not shown

Engine Body

D_SN11_1_1			Cylinder Head & Rocker Cover		
FIG.	REF.	QTY	DESCR.	FROM	UPTO
72	18221065	1	Gasket		
73	18221024	3	Bolt		
74	18220098	1	Clamp		
76	18220096	1	Hose 9-17-185		
77	18220099	5	Clamp		
78	16514022	1	Coupling,screw		
79	57000378	1	Washer 18-24-1,5		
80	18210015	1	COLLAR Union		
81	54081008	1	Clamp DIN 3017 8-16 W4		
82	18220096	1	Hose 9-17-185		
83	18220097	1	Pipe		
84	54081008	1	Clamp DIN 3017 8-16 W4		
NS	18220063	1	Bolt [NS]		
NS	18220098	1	Clamp [NS]		

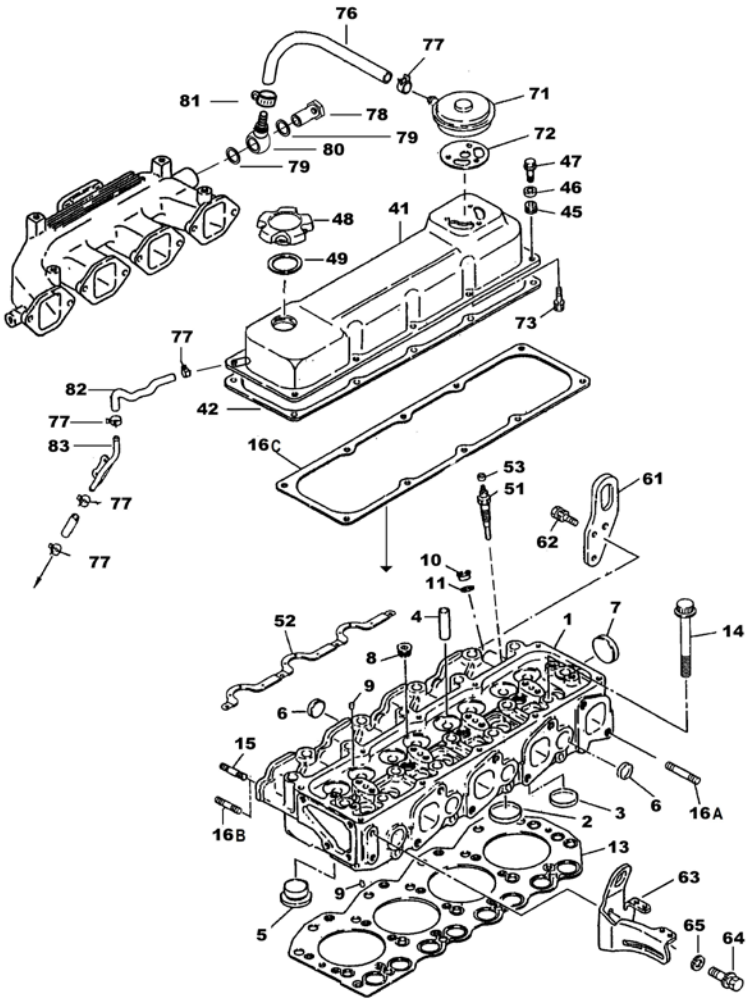

Engine Body

	D_SN11_1_4		Timing Parts		
FIG.	REF.	QTY	DESCR.	FROM	UPTO
1	18222035	1	CamShaft Assy		
2	18222074	1	Plate,CamShaft		
3	18222070	2	Bolt		
4	18222037	1	Gear CamShaft		
5	18222069	1	KEY		
6	18222025	1	Washer Plain		
7	18222071	1	Bolt		
9	18222066	1	INTERMEDIATE Shaft		
10-11	18222065	1	Gear IDLER		
11	18222036	1	Bush		
12	18222067	1	Plate IDLER Gear		
13	18222072	2	Bolt		
21	18222055	4	Intake Valve		
22	18222056	4	Exhaust Valve		
23	18222057	8	Spring Valve		
24	18222054	8	Seal Oil,Valve		
25	18222059	16	COLLET Valve		
26	18222058	8	Retainer Valve Spring		
27	18222052	8	Seat Valve Spring,INNER		
31	18222046	1	Shaft Rocker		
32	18222050	4	Bracket Rocker Shaft		
33	18222051	2	Bracket Rocker Shaft		
35	18222064	12	Washer		
36	18222063	12	Washer		
37	18222034	2	Bolt		
38	18222038	2	Washer		
39	18222039	2	Washer		
40	18222047	3	Spring Shaft Rocker INSide		
41	18222048	1	Spring Rocker		
42	18222049	1	Retainer Rocker Shaft		
43	18222042	4	Rocker Valve		
44	18222043	4	Rocker Valve		
45	18222044	8	Screw Adjusting		
46	18222045	8	Nut LOCK Rocker PIVOT Screw		
47	18222073	8	Washer PIVOT		

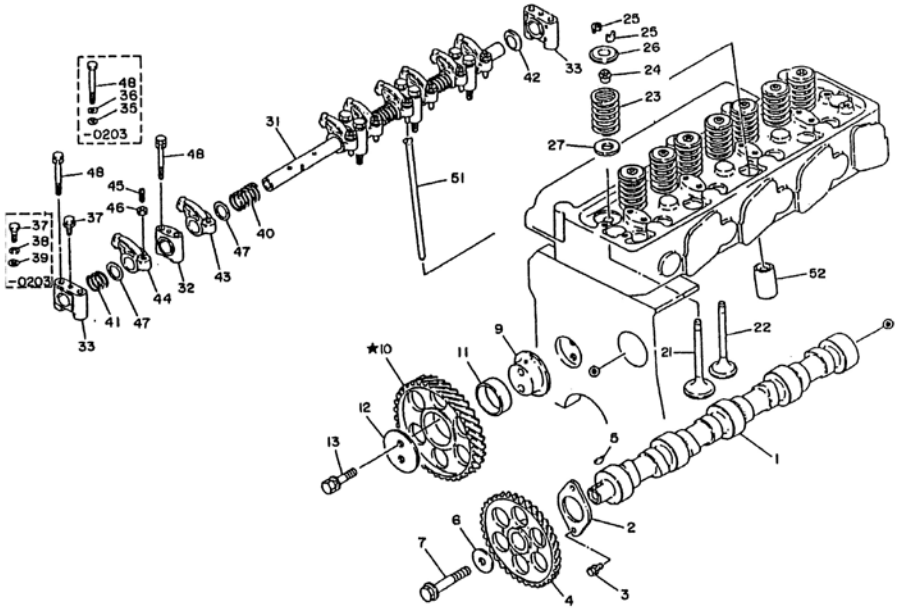

Engine Body

D_SN11_1_4			Timing Parts		
FIG.	REF.	QTY	DESCR.	FROM	UPTO
48	18222062	12	Bolt		
51	18222041	8	Gauge ROD PUSH		
52	18222040	8	LIFTER Valve		

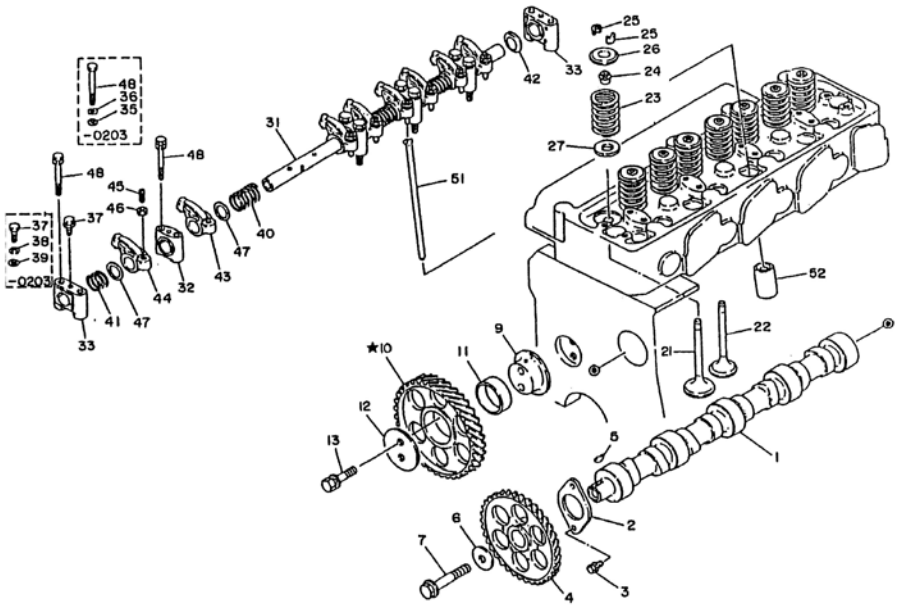

Engine Body

D_SN11_1_5			Timing Gear Case		
FIG.	REF.	QTY	DESCR.	FROM	UPTO
1	52103156	4	Bolt DIN 912 M6-16 8.8		
2	53033006	4	Washer GROWER DIN 127-6		
3	13310013	1	Gasket,water pump		
4	52102258	3	Bolt DIN 933 M8-25 8.8		
5	18210014	1	Cover		
7	18220098	1	Clamp		
8	18210010	1	Block,Water Pump		
9	15310072	1	CrossHead		
10	18225004	1	Nut		
11	15310072	1	CrossHead		
12	18210072	2	Shaft		
13	52102260	2	Bolt DIN 933 M8-35 8.8		
14	53033008	6	Washer GROWER DIN 127-8		
15	51030008	6	Washer DIN 125-8		
16	16713009	1	Bolt,eye		
17	56000061	1	Washer 10-16-1,5		
18	18210009	1	Coupling Ball		
19	52101166	1	Bolt DIN 931 M6-65 8.8		
20	52103258	1	Bolt DIN 912 M8-25 8.8		
21	52103258	1	Bolt DIN 912 M8-25 8.8		
23	18220046	1	Cover		
24	18220099	6	Clamp		
25	18220096	1	Hose 9-17-185		
26	NU028.75	1	NURAL 28 ORANGE 75ML		
31	18222068	1	Gear Injection Pump		
32	18220039	1	Seal Oil		
34	18220066	3	Bolt		
35	18220065	3	Bolt		
36	18220048	1	Case Front Cover		
38	18220071	1	Cover Front		
40	18220068	1	Gasket		
41	18220069	1	Gasket		
43	18220082	1	Nut		
44	18220063	9	Bolt		
45	18220035	1	Plate, Front		

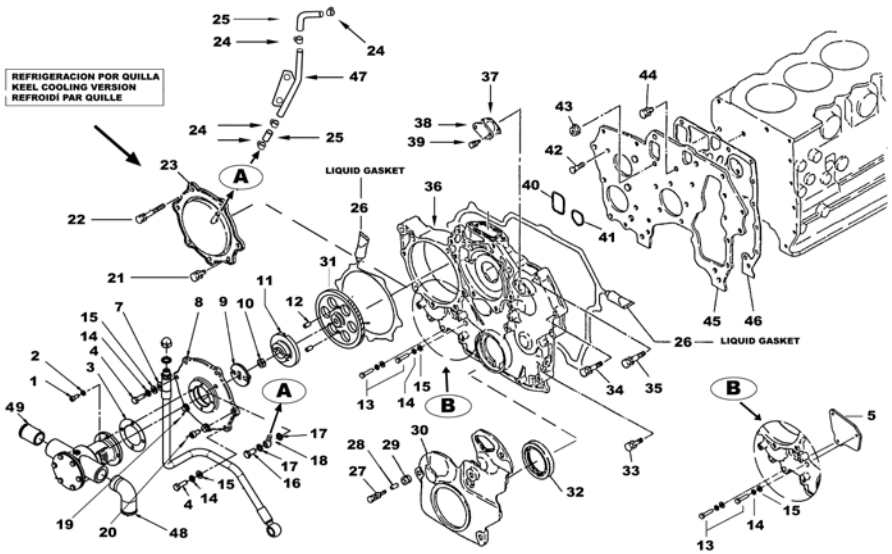

Engine Body

D_SN11_1_5			Timing Gear Case		
FIG.	REF.	QTY	DESCR.	FROM	UPTO
46	18220019	1	Gasket Plate		
47	18220097	1	Pipe		
48	14711021	1	Hose Nº 1		
49	60180007	1	Outlet Coupling		

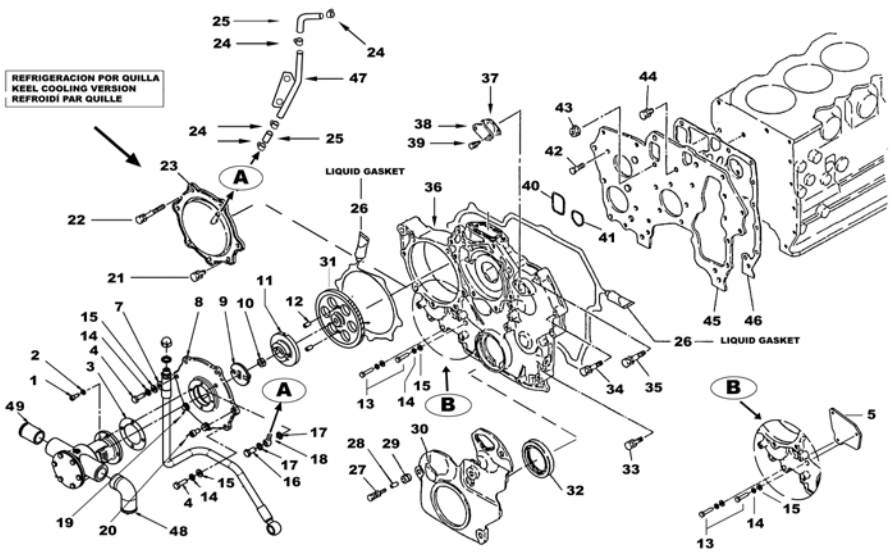

Engine Body

D_SN11_1_6			Cranckcase		
FIG.	REF.	QTY	DESCR.	FROM	UPTO
1	18220001	1	Block Assy-Cylinder		
8	18220009	10	Bolt Bearing Cap		
9	18220053	1	Pin		
10	18220015	8	Plug		
11	18220016	9	Plug		
12	18220021	1	Plug		
13	18220022	4	Cap Sealing [NP]		
14-18	18220055	1	Bush Set -0,25		
14-18	18220056	1	Bush Set -0,50		
14-18	18220057	1	Bush Set -0,75		
14-18	18220054	1	Bush Set STD.		
20	18220045	1	Plug		
21	18220015	3	Plug		
22	18220014	2	Pin		
23	18220012	2	Pin		
24	18220045	2	Plug		
25	18220023	1	Plug-WELCH		
26	18220014	2	Pin		
27	18220013	2	Pin		
29	18220036	2	Stud		
30	18220058	1	Stud Oil Filter		
31	18220060	1	Bush Oil Pump		
41	18220051	4	JET Assy,Oil		
42	18220052	4	Bolt		
43	18220017	1	Gasket,Retainer		
45	18220037	6	Bolt		
46	18220018	1	Seal Oil,CrankShaft		
47	18220045	1	Plug		
51	18220059	1	JET Oil,TIMING Chain		
56	18220049	1	Plug		
61	18220044	1	Plug		
NS	18220024	1	Plate,Engine REAR [NS]		

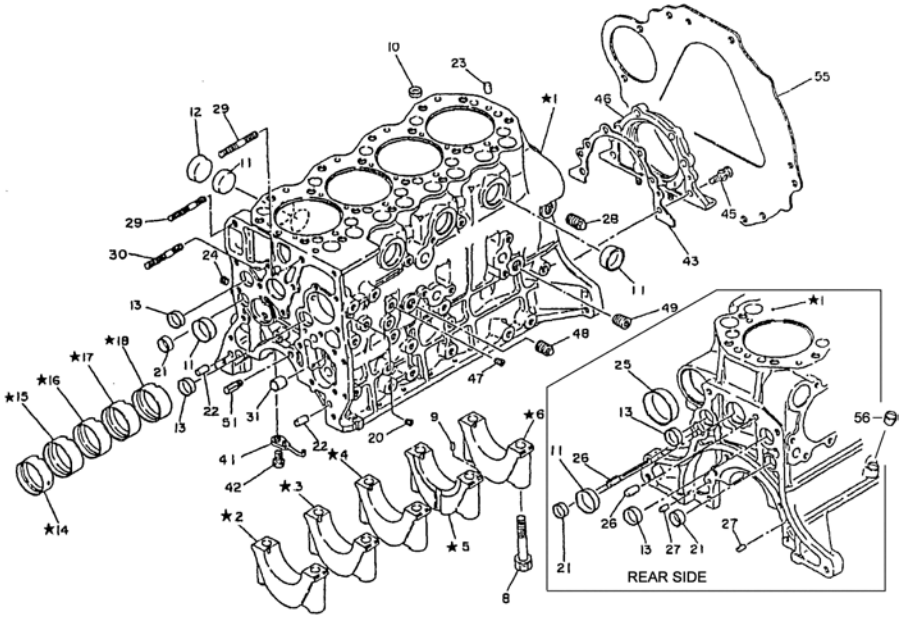

[NP] Not provided
[NS] Not shown

Engine Body

D_SN11_1_8			Piston & Connectiong Rod		
FIG.	REF.	QTY	DESCR.	FROM	UPTO
1-3	18222003	4	Piston With Pin		
3	18222009	8	Ring SNAP		
4	18222007	1	Ring Set,Piston		
4	18222006	1	Ring Set,Piston		
5-9	18222012	4	ROD Complet,CONNECTING		
7	18222013	8	Bolt,connecting rod		
8	18222011	8	Nut,connecting rod		
9	18222033	4	Bush Piston Pin		
*1-3	18222001	4	Piston With Pin GRADE 1		
*1-3	18222002	4	Piston With Pin GRADE 2		
10	18222015	8	Bearing Connecting Rod -0,25		
10	18222016	8	Bearing Connecting Rod -0,50		
10	18222014	8	Bearing Connecting Rod STD.		
10	18222019	8	Bearing Connecting Rod -1,00		
10	18222017	8	Bearing Connecting Rod -0,75		
21-22	18222018	1	CrankShaft Assy		
22	18222030	1	Bushing CrankShaft		
25	18222028	1	Pin		
26	18222020	2	KEY		
27	18222026	1	Nut Pulley,CrankShaft		
28	18222021	1	SPROCKET CrankShaft		
31-32	18220004	1	Bearing Set CrankShaft -0,25		
31-32	18220006.1	1	Bearing Set,CrankShaft -1,00		
31-32	18220006	1	Bearing Set,CrankShaft -0,75		
31-32	18220003	1	Bearing Set CrankShaft STD.		
31-32	18220005	1	Bearing Set,CrankShaft -0,50		
35-36	18220028	1	Washer Set,THRUST +0,20		
35-36	18220025	1	Washer Set,THRUST T=2,325		
35-36	18220028.1	1	Washer Set,THRUST +0,40		
35-36	18220027	1	Washer Set,THRUST T=2,375		
35-36	18220026	1	Washer Set,THRUST T=2,350		

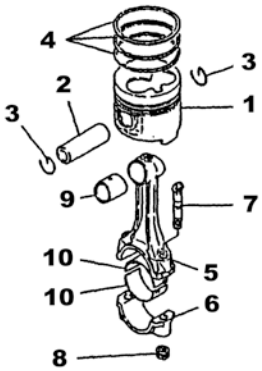

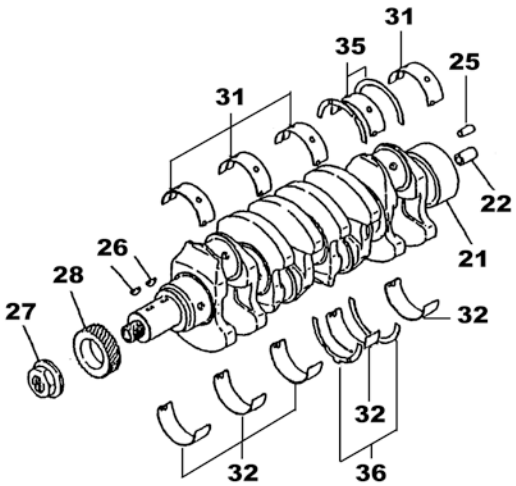

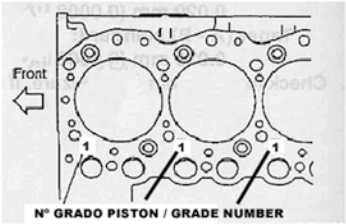

(*) Número grabado en bloque motor. Pedir recambio según este número. Desmontar junta y culata para ver este número.
(*) Number writted at the top Block Assy-cylinder. Order the piston depending this number. Dismantle the cylinder head and its joint to read the number.

Engine Body

D_SN11_1_9			Crankshaft & Flywheel		
FIG.	REF.	QTY	DESCR.	FROM	UPTO
1	18222024	1	Pulley CrankShaft [NP]		
2	18222018	1	CrankShaft Assy		
5-6	18222027.1	1	Flywheel MACHINED [NP]		
6	18222029	1	Gear Ring		
7	18220013	3	Pin		
8	18222031	6	Bolt Flywheel		

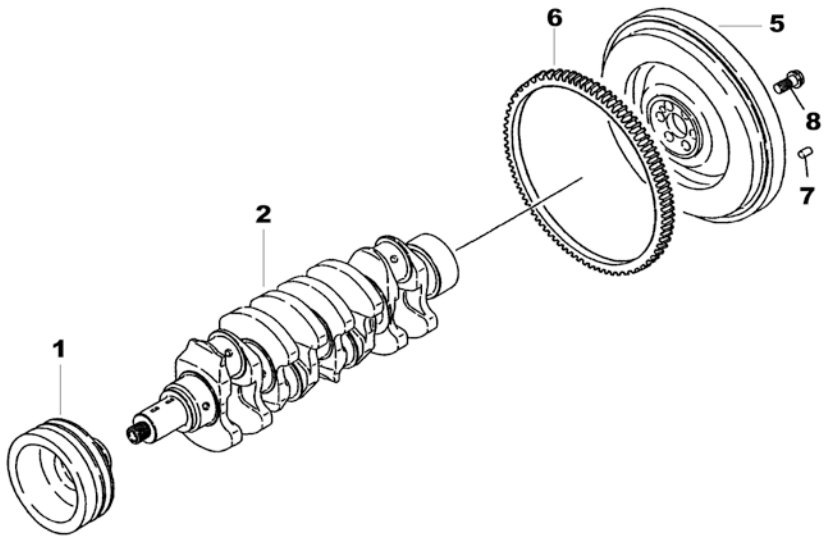

[NP] Not provided

Engine Body

D_SN11_1_10			Oil Sysem		
FIG.	REF.	QTY	DESCR.	FROM	UPTO
1	18224040	1	Pump Assy Oil		
2	18224041	1	Gasket Oil Pump		
3	18221008	5	Bolt		
5	18224052	1	STrainer Assy Oil		
6	18224053	1	Gasket Oil STrainer		
7	18221008	2	Bolt		
8	18220063	1	Bolt		
11-15	18224056	1	Bracket Oil Filter		
12	18224043	1	Valve Assy Oil REGULATOR		
13	18324044	1	Spring Valve		
14	18224057	1	Washer		
15	18224045	1	Plug		
25	18224076	3	O-Ring D. 24X3,5		
26	18220065	3	Bolt		
27	18221008	4	Bolt		
28	18224058	1	Protection Filter		
29	18220063	1	Bolt		
32	18224051	1	Filter,oil		

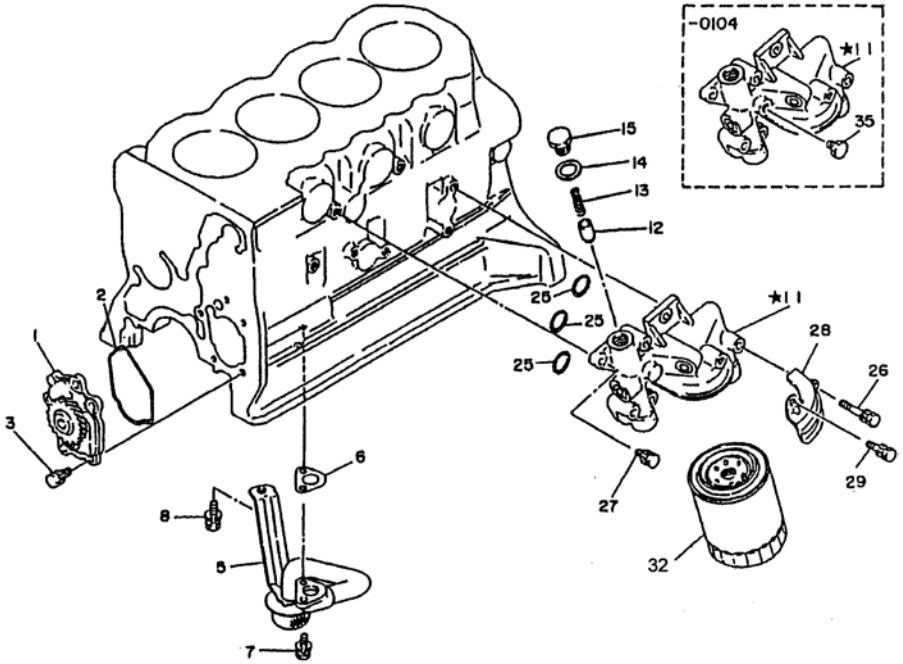

Engine Body

D_SN11_1_11			Oil Pan & Pump		
FIG.	REF.	QTY	DESCR.	FROM	UPTO
1	18220030	1	PAN,Assy Oil		
2	18220029	1	Gauge Oil LEVEL		
3	18220007	1	Guide Oil LEVEL Gauge		
4	18220029.1	1	DIPSTICK Oil O-Ring		
5	18220038	26	Bolt		
6	52102258	1	Bolt DIN 933 M8-25 8.8		
7	53033008	1	Washer GROWER DIN 127-8		
8	51030008	1	Washer DIN 125-8		
9	18220098	1	Clamp		
10	56000219	1	Washer 14-20-3		
11	16514020	1	Plug		
12	14714001	1	Pump,oil Suction		
13	14712015	1	Bolt,Coupling pipe oil		
14	57000375	2	Washer 17-22-1,5		
15	18214021	1	ExtraCTION, Hose		
31	18220033	1	Gasket,Oil PAN		

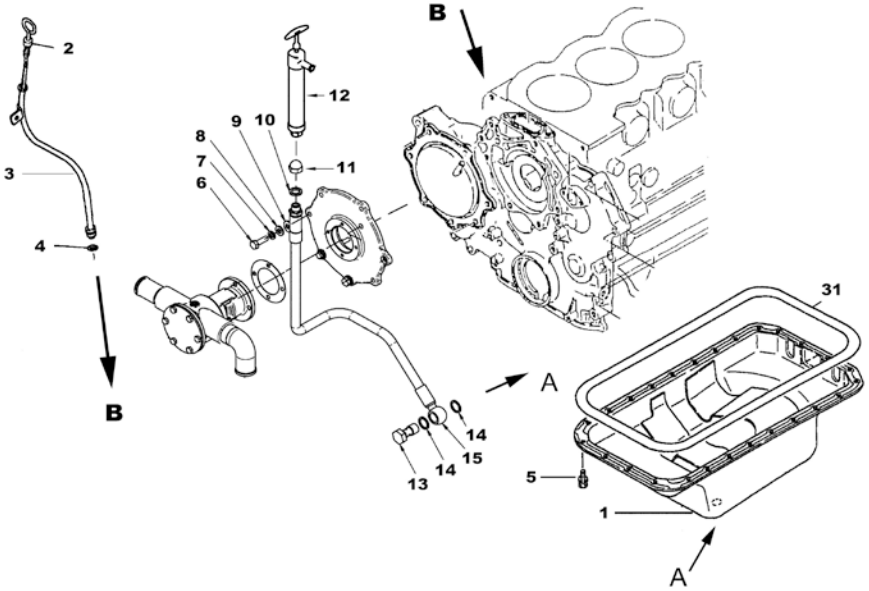

Engine Body

D_SN85_1_12			Engine Brackets		
FIG.	REF.	QTY	DESCR.	FROM	UPTO
1	61682000	4	Anti Vibration Mount Type E 75SHA		
2	18210002	1	Bracket Front,LEFT		
3	18210001	1	Bracket Front,RIGHT		
4	53033010	8	Washer GROWER DIN 127-10		
5	61685000	4	Anti Vibration Mount Type B 63SHA		
6	18210012	1	Carcasse Type HURTH		
7	52103309	8	Bolt DIN 912 M10-30 8.8		
8	18210013	1	SAE 7 Bell Housing		

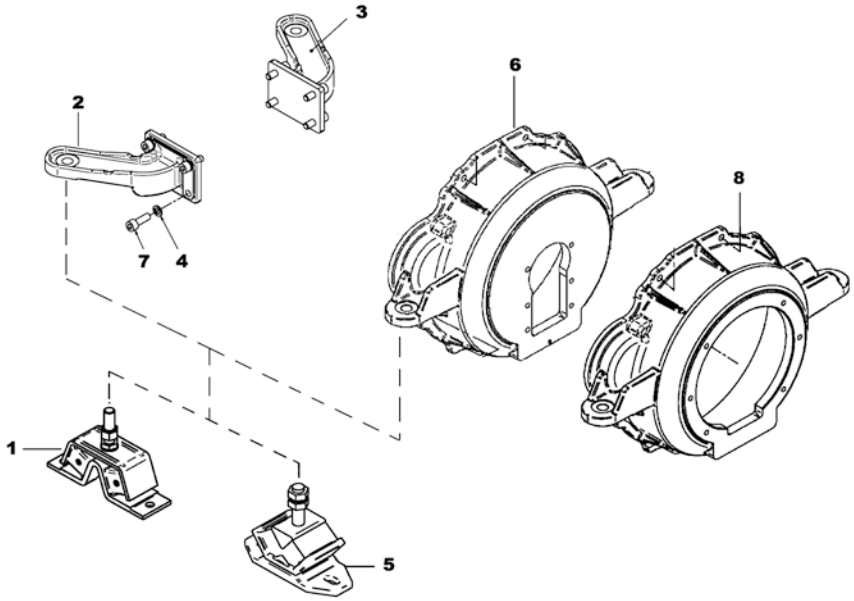

Engine Body

D_SN11_1_13			Bracket, Engine Control		
FIG.	REF.	QTY	DESCR.	FROM	UPTO
1	18225001	1	Pump Assy,Fuel Injection		
2	13319004	1	Bracket,adjustment morse engin		
3	14719013	1	Clamp,cable		
4	15119015	1	CABLE Holder Ball		
5	18219001	1	Bracket,Morse		
6	51030006	4	Washer DIN 125-6		
7	51030008	1	Washer DIN 125-8		
8	52102157	2	Bolt DIN 933 M6-20 8.8		
9	52102257	1	Bolt DIN 933 M8-20 8.8		
10	52120006	3	Nut DIN 934 M6 8.8		
11	52120008	1	Nut DIN 934 M8 8.8		
12	53033006	1	Washer GROWER DIN 127-6		
13	55307104	2	Bolt DIN 86 W3/16-10		
14	(*)	0	Not available [NP] [VAR]		
15	11114122	1	Ball Joint		
17	18225006	1	KEY		
18	18225007	1	Gasket		
19	18225008	1	Bracket,Pump		
20	18225009	1	Bolt		
22	18220041	1	Bolt		
23	18225011	1	Bracket,Pump		
24	18220041	2	Bolt		
25	18225010	1	Bolt		
26	18225012	1	Spacer		
28	18222068	1	Gear Injection Pump		
29	53033006	2	Washer GROWER DIN 127-6		
30	18225300	1	Valve Assy		

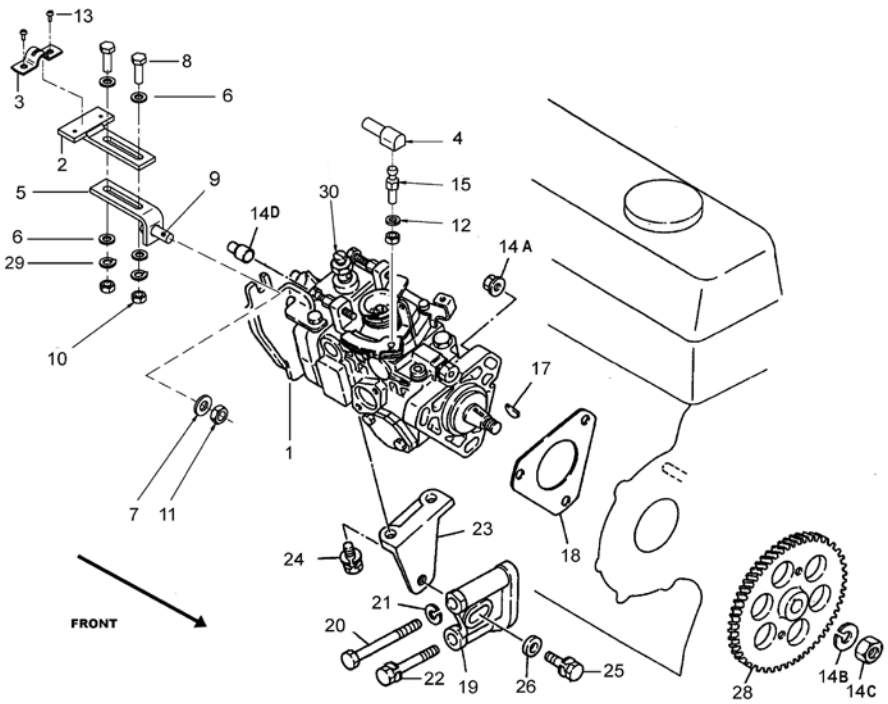

[NP] Not provided

[VAR] Variable according to repair

Engine Body

D_SN11_1_14			Oil Cooler		
FIG.	REF.	QTY	DESCR.	FROM	UPTO
1-10	18222110	1	Cooler Assy Oil		
2	18224046	1	Valve		
3	18224044	1	Spring Oil REGULATOR		
4	18224047	2	Gasket		
5	18224048	2	Plug		
6	18224049	1	Valve Assy RELIEF		
7	18224050	1	Spring Valve Oil		
8	18222112	2	Seal		
9	18222111	1	Element Oil Cooler		
10	18221033	4	Nut		
21	18322112	1	Gasket Oil Cooler		
22	18224076	2	O-Ring D. 24X3,5		
23	18221008	10	Bolt		
24	18220065	1	Bolt		
25	18227027	1	SWITCH Oil Pressure		
26	13417051	1	Bell Housing		
27	60900785	1	Oil Presure Sender 12-24 V		
27*	60900985	1	Pressure Sensor		

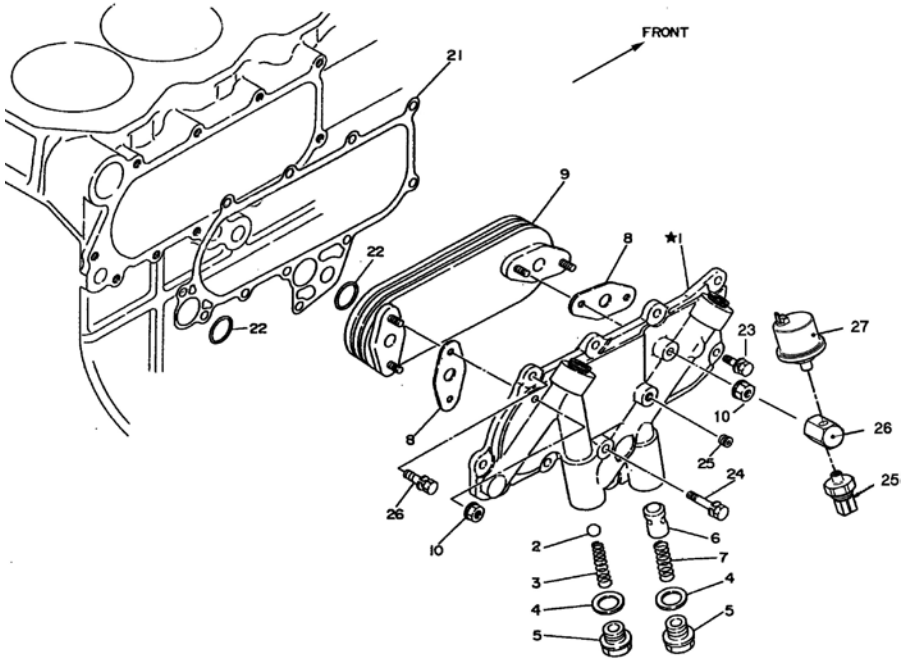

27* Montado en motores con panel ref. 60982125
Fitted in engines equiped with panel part no. 60982125

Inlet & Exhaust

D_SN85_2_1			Inlet		
FIG.	REF.	QTY	DESCR.	FROM	UPTO
1	18210020	1	Spacer, Air Filter		
3	52102257	4	Bolt DIN 933 M8-20 8.8		
4	53033008	4	Washer GROWER DIN 127-8		
5	18210030	1	Air Filter		
6	18220037	6	Bolt		
7	18221033	2	Nut		
8	18221030	1	MANIFOld Intake		
9	18221032	1	Gasket MANIFOld		
71	18221066	1	Valve Assy Air [NP]		
76	18220096	1	Hose 9-17-185		
77	18220099	2	Clamp		
78	16514022	1	Coupling,screw		
79	57000378	1	Washer 18-24-1,5		
80	18210015	1	COLLAR Union		
81	54081008	1	Clamp DIN 3017 8-16 W4		

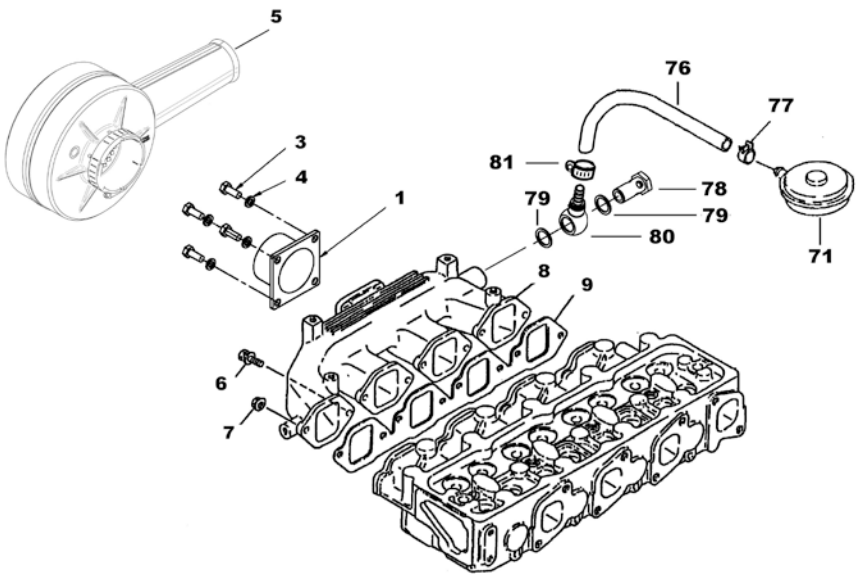

[NP] Not provided

Cooling System

D_SN11_3_1			Water Pump		
FIG.	REF.	QTY	DESCR.	FROM	UPTO
1	18221020	1	Pump Assy Water		
2	18221022	1	Gasket Water Pump		
3	18221026	2	Nut		
4	18221008	2	Bolt		
5	18221037	1	Housing Thermostat		
6	18221038	1	Gasket Thermostat Housing		
7	18221039	1	Gasket		
8	18221029	1	Bolt		
9	18221041	1	Screw		
10	18221042	2	Washer GROWER DIN 127-8 [NP]		
11	18221008	2	Bolt		
12	18221008	2	Bolt		
21	18221021	1	Outlet Water		
22	18221049	1	Gasket Water Outlet		
23	18221050	1	Bolt		
24	18221042	1	Washer GROWER DIN 127-8 [NP]		
25	18220037	2	Bolt		
26	18217015	1	Adapter		
27	18217014	1	Adapter		
28	60900070	1	Thermo-Switch 97ºC		
29	60900780	1	Temperature SENDER 12 V		
29*	60900980	1	Temperature Sensor		
30	57000375	1	Washer 17-22-1,5		
31	56000015	2	Washer 12-19-2		
32	18221027	1	Thermostat 82º		
33	18221028	1	Belt Type A 43 1100		

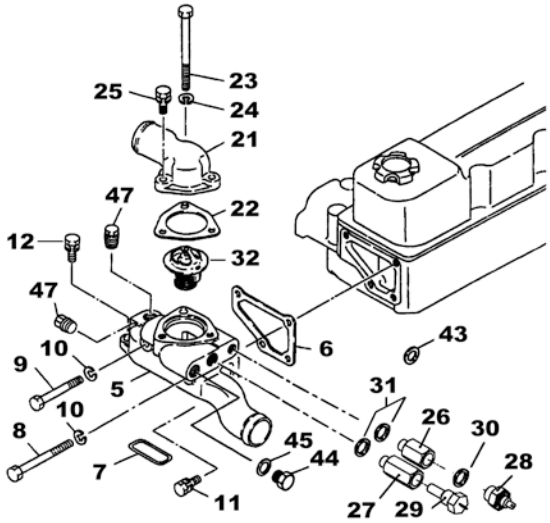

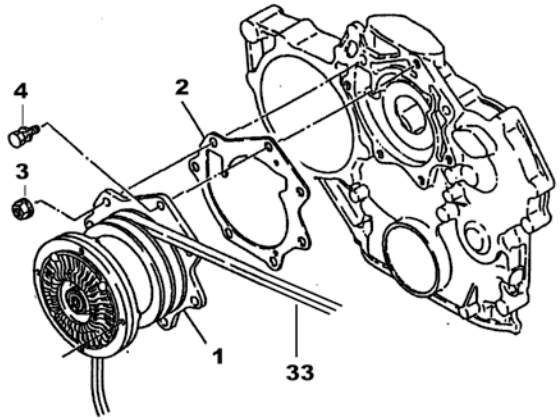

[NP] Not provided

Cooling System

D_SN85_3_2			Cooler Pipes		
FIG.	REF.	QTY	DESCR.	FROM	UPTO
1	17111022	1	Elbow		
2	18211013	1	Pipe		
3	18211016	1	Pipe		
4	18211021	6	Pipe 38-50-60		
5	54082032	1	Clamp DIN 3017 32-50/12 W4		

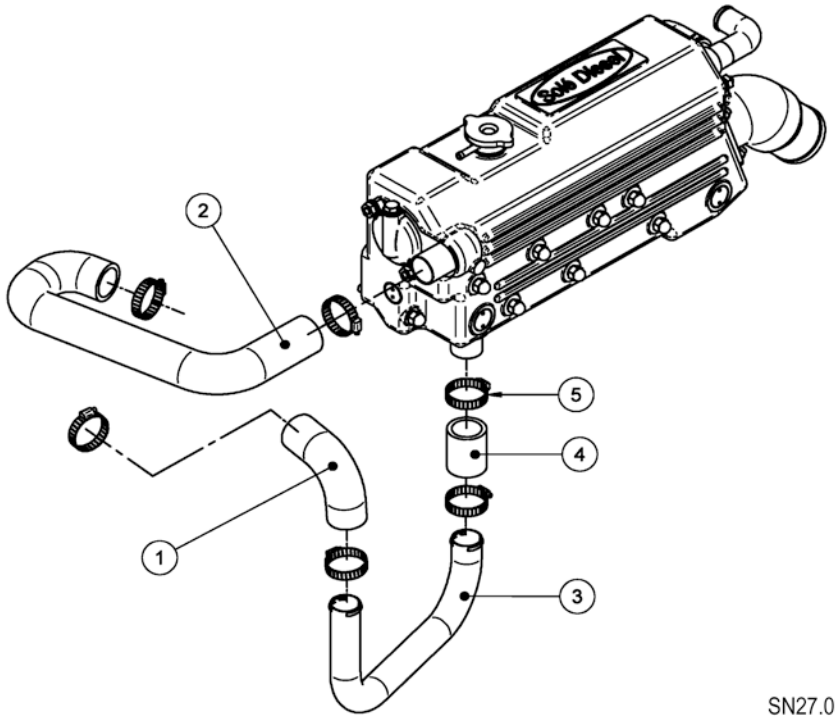

Cooling System

	D_SN85_3_3		Water Cooler		
FIG.	REF.	QTY	DESCR.	FROM	UPTO
1	18211000	1	Water Cooler		
2	13111038	1	Bolt DIN 933 M10-15 8.8		
3	13511013	8	Nut DIN 1587 M10		
4	14711003	1	Cap [NP]		18/01/2017
4	14711003.1	1	Cap	19/01/2017	
5	14711021	1	Hose Nº 1		
6	14711028	1	Hose Nº 4		
7	15111002R	1	Cap,mouth		
8	16513002	1	Exhaust Elbow Gasket		
9	16511007	8	Stud		
10	16513004	4	Plug 1"		
11	17111060	1	Plate "SOLE Diesel" [NP]		
12	17111062	2	Bolt		
13	17411003	1	Cover, water cooler		
14	18011002	1	Cover Front,water cooler		
15	18011008	2	O-Ring D. 72X3		
16	18011031	1	Engine Anode		
17	18011009	1	Anode Plug		
18	18211012	2	Outlet Coupling 1 1/4"		
19	18211015	7	Stud		
20	18211015.1	1	Stud		
21	18211034	1	Pipe,Rubber		
22	18221035	1	Gasket, Exhaust		
23	18211001	1	Body, Water Cooler [NP]		
24	18213015	1	Wet,Bend		
25	19011004	1	Element,water cooler		
26	51030010	4	Washer DIN 125-10		
27	52120010	4	Nut DIN 934 M10 8.8		
28	53033010	8	Washer GROWER DIN 127-10		
29	54082032	2	Clamp DIN 3017 32-50/12 W4		
30	55120110	4	Nut DIN 934 M10		
31	56000061	8	Washer 10-16-1,5		
32	56000073	1	Copper Washer 16-23-1,5		
33	18211002	1	Cover		
34	53033006	6	Washer GROWER DIN 127-6		

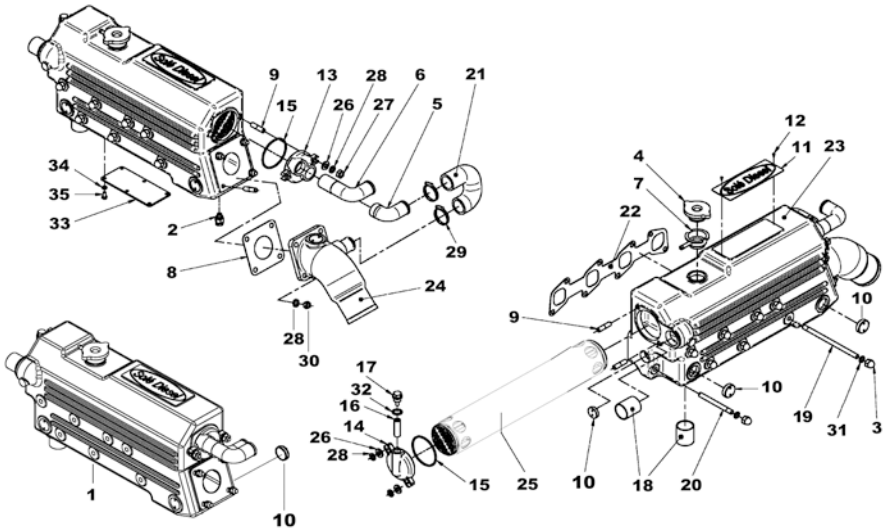

[NP] Not provided

D_SN85_3_3			Water Cooler		
FIG.	REF.	QTY	DESCR.	FROM	UPTO
35	52102155	6	Bolt DIN 933 M6-12 8.8		
36	52102155	6	Bolt DIN 933 M6-12 8.8		

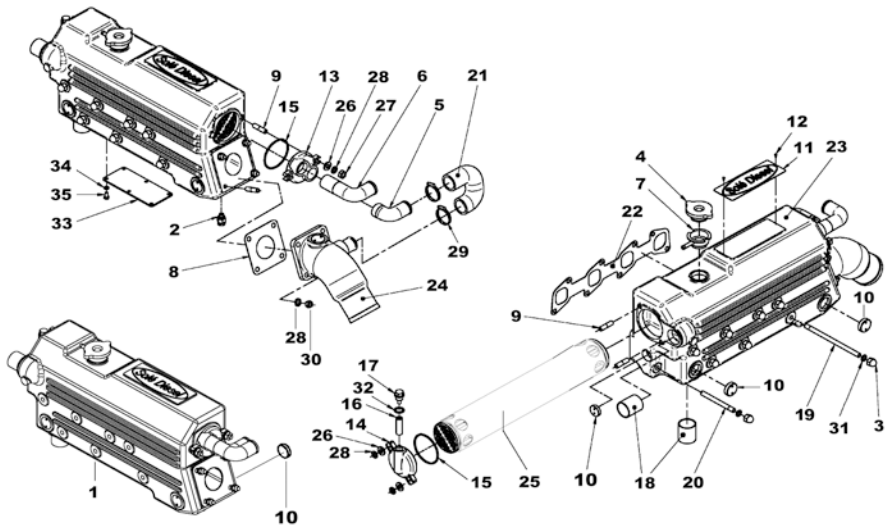

Fuel System

D_SN85_4_1			Fuel Pipe		
FIG.	REF.	QTY	DESCR.	FROM	UPTO
1	18226001	4	Nozzle Holder		
2	18224012	4	Injector Washer [NP]		
3	18224014	4	Gasket Nozzle		
15	18224031	1	Support-Injection Tube		
16	18224032	1	Support-Injection Tube		
17	18224033	2	Support-Injection Tube		
18	18224034	2	Support-Injection Tube		
19	18224035	4	Bolt		
25	18224005	1	Tube Gas-Oil Spill		
26	18224013	4	Injector Gasket [NP]		
27	18224006	4	Nut-SPILL		
28	18224004	1	Tube Gas-Oil SPILL		
29	18224036	2	Clamp		
30	18224037	1	Clip		
31	18224038	1	INSERT Rubber		
32	18224039	1	Bolt		
41	18224015	1	Pipe Injection N.1		
42	18224016	1	Pipe Injection N.2		
43	18224017	1	Pipe Injection N.3		
44	18224018	1	Pipe Injection N.4		
NS	18224008	1	Hose Fuel [NS]		
NS	18224007	2	Gasket [NS]		

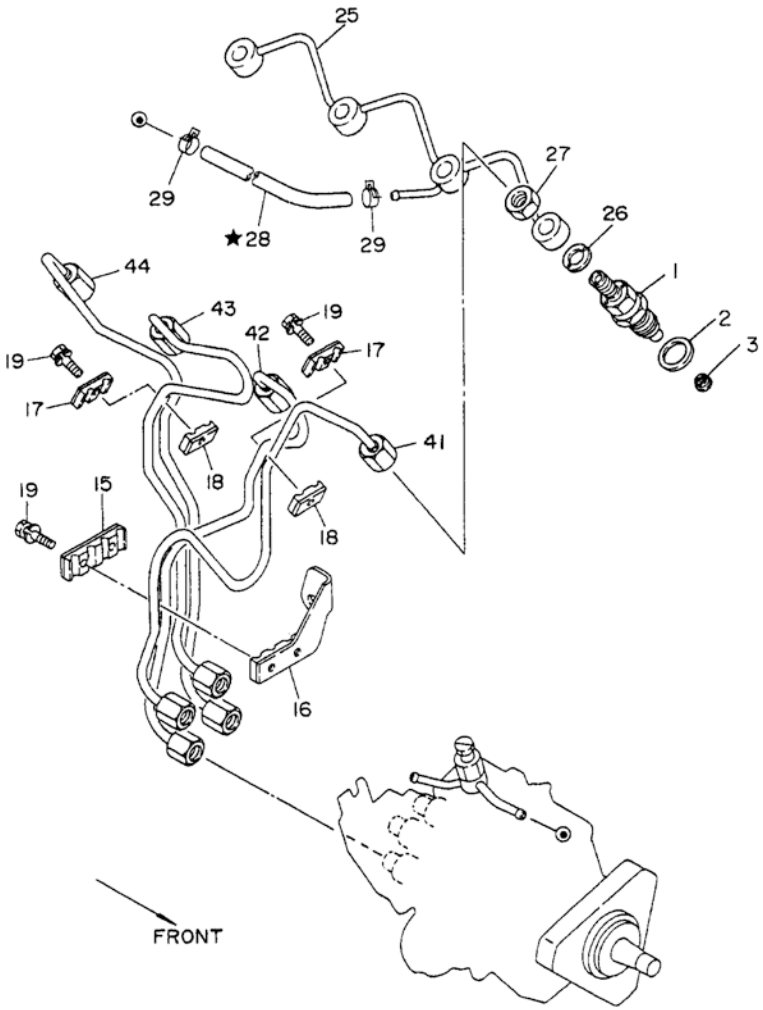

[NP] Not provided
[NS] Not shown

D_SN85_4_2			Injection Nozzle		
FIG.	REF.	QTY	DESCR.	FROM	UPTO
1-6	18226002	4	Holder Nozzle		
1-7	18226001	4	Nozzle Holder		
2	18226003	4	PUSH ROD		
3	18226004	4	Spring		
4	18226014	0	Washer 0,50 [VAR]		
4	18226012	0	Washer 0,30 [VAR]		
4	18226013	0	Washer 0,40 [VAR]		
4	18226010	0	Washer 0,10 [VAR]		
4	18226016	0	Washer 0,54 [VAR]		
4	18226017	0	Washer 0,56 [VAR]		
4	18226019	0	Washer 0,58 [VAR]		
4	18226020	0	Washer 0,80 [VAR]		
4	18226011	0	Washer 0,20 [VAR]		
4	18226015	0	Washer 0,52 [VAR]		
5	18226007	4	PIECE DISTANCE		
6	18226006	4	RETAINING Nut		
7	18226018	4	Nozzle Assy		

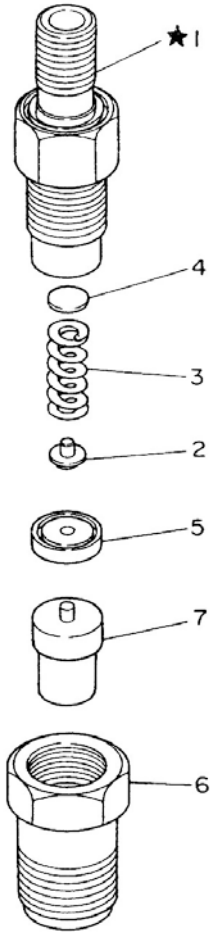

[VAR] Variable according to repair

Fuel System

D_SN85_4_5			Fuel Filter		
FIG.	REF.	QTY	DESCR.	FROM	UPTO
1	18214005	1	Fuel Pipe		
2	18214001	1	Bracket,Gas-Oil Filter		
3	18224021	1	Cover, Upper		
3-4	18224020	1	Filter Assy Fuel [NP]		
4	18224022	1	Filter Fuel		
5	51030008	2	Washer DIN 125-8		
6	52102256	2	Bolt DIN 933 M8-15 8.8		
7	52102257	2	Bolt DIN 933 M8-20 8.8		
8	53033008	2	Washer GROWER DIN 127-8		
9	54081008	2	Clamp DIN 3017 8-16 W4		

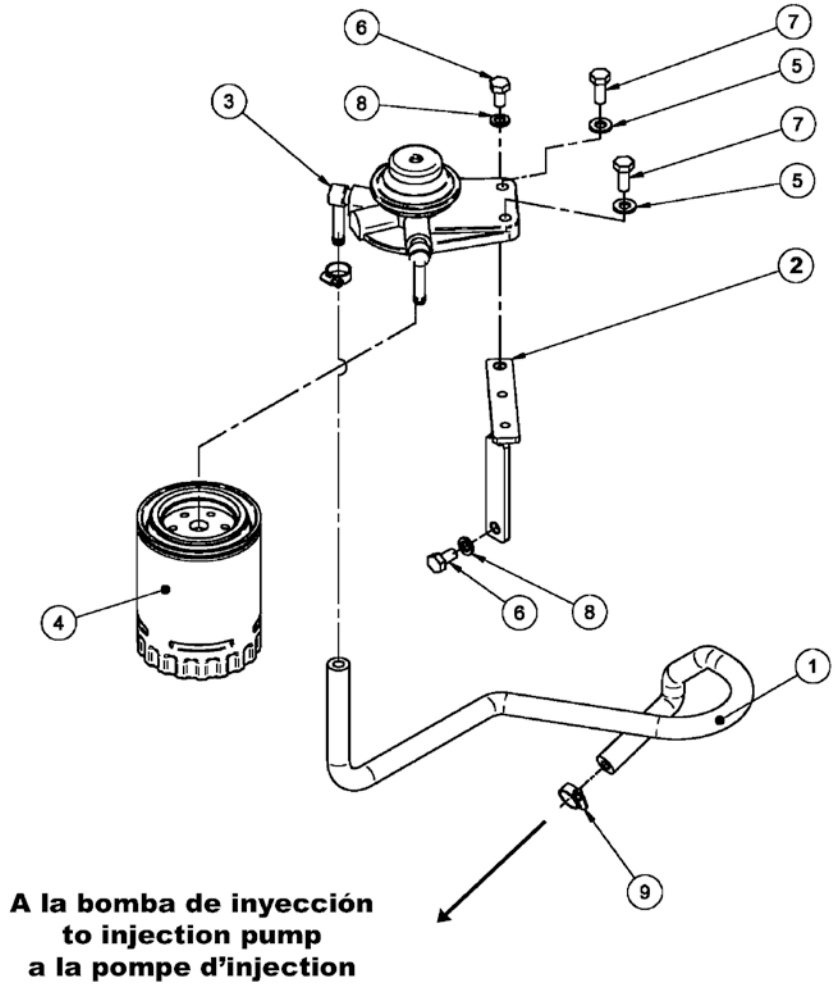

[NP] Not provided

12V Electrical System

D_SN85_5_1			Kit Alternator 12V/70A		
FIG.	REF.	QTY	DESCR.	FROM	UPTO
1	18017010.1	1	Alternator 14/70A		
2	52102260	1	Bolt DIN 933 M8-35 8.8		
3	53033008	1	Washer GROWER DIN 127-8		
4	51031008	1	Washer DIN 9021 8		
5	18227004	2	Bolt		
6	18227007	1	BRACE Generator [NP]		
7	18227005	2	Bolt		
8	18227002	1	Bracket Alternator		
9	18325011	3	Bolt		
12	18221069	2	Washer		
14	18221028	1	Belt Type A 43 1100		

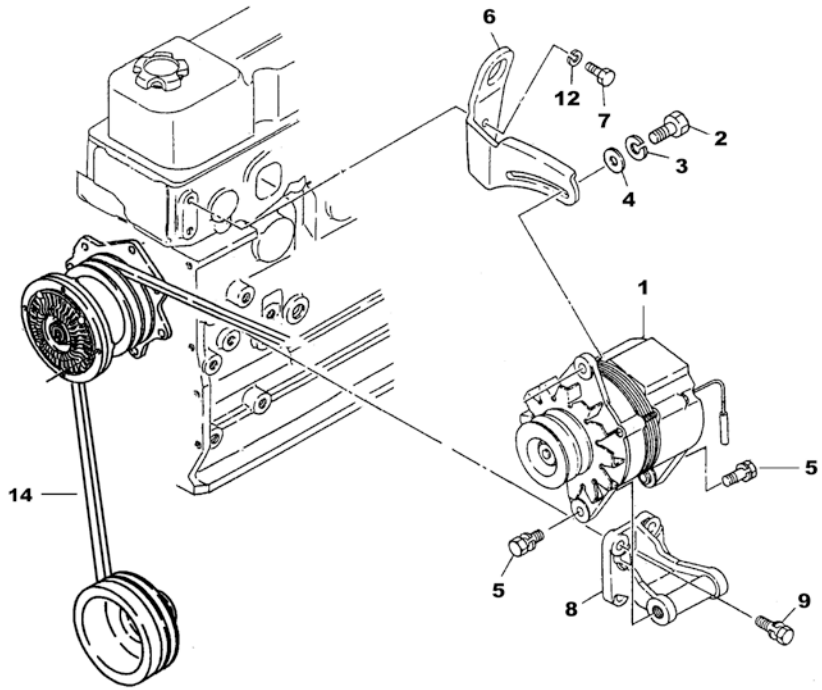

[NP] Not provided

D_SN85_5_3			Kit Alternator 14V/110A		
FIG.	REF.	QTY	DESCR.	FROM	UPTO
1	18217019	1	ALT. 110A/14V With Pulley		
2	52102260	1	Bolt DIN 933 M8-35 8.8		
3	53033008	1	Washer GROWER DIN 127-8		
4	51031008	1	Washer DIN 9021 8		
5	18227004	2	Bolt		
6	18227007.2	1	BRACE Generator		
7	18227005	2	Bolt		
8	18227002.2	1	Bracket Alternator		
9	18325011	3	Bolt		
12	18221069	2	Washer		
14	18221028	1	Belt Type A 43 1100		

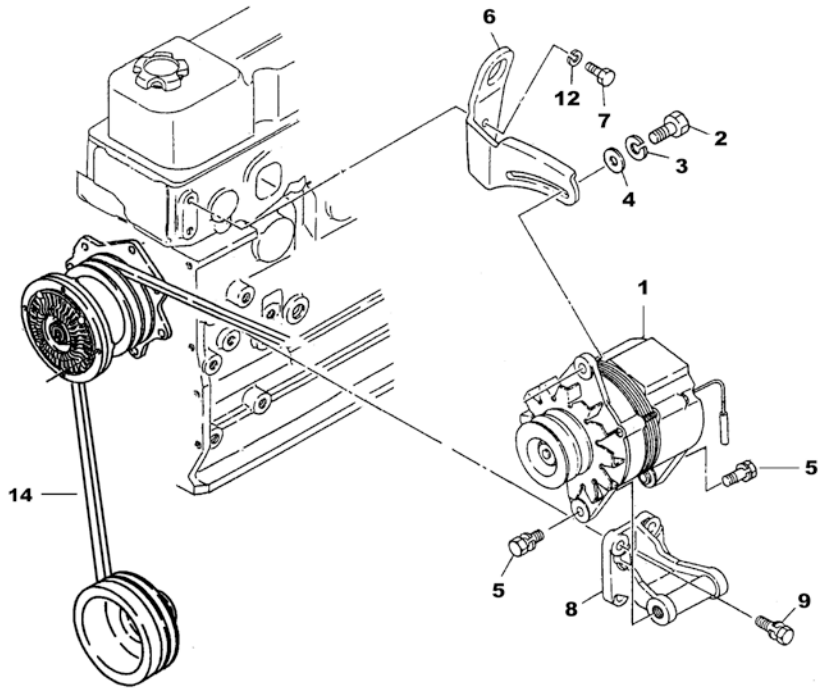

12V Electrical System

	18217104		Kit Alt. 14V/95A		
FIG.	REF.	QTY	DESCR.	FROM	UPTO
1	18227002.4	1	Bracket Alternator		
2	17117025	1	Alt. 14V/95A Mahle	13/04/2016	
3	17614019	4	Spacer 10,5X18X6		
4	52102310	2	Bolt DIN 933 M10-35 8.8		
5	52120008	2	Nut DIN 934 M8 8.8		
6	51031008	1	Washer DIN 9021 8		
7	52102260	1	Bolt DIN 933 M8-35 8.8		
8	53033008	1	Washer GROWER DIN 127-8		
9	51030008	2	Washer DIN 125-8		
10	17117016.7	1	Pulley		
11	17417025	1	Spacer 13.5x10.2x11	09/09/2015	
12	52101325	1	Bolt DIN 931 M10-120 8.8		
13	53033010	2	Washer GROWER DIN 127-10		
14	51030010	3	Washer DIN 125-10		
16	TR.10.8	1	Ring Terminal 10 Sec.		
17	51030005	1	Washer DIN 125-5		
18	52120005	1	Nut DIN 934 M5 8.8		
19	13817016	1	Spacer 17X28X4		
20	18227007.2	1	BRACE Generator		
NS	TFM.6.3.T.5.I	1	Straight Receptacle 6.3 Faston [NS]		
NS	18221028	1	Belt Type A 43 1100 [NS]		

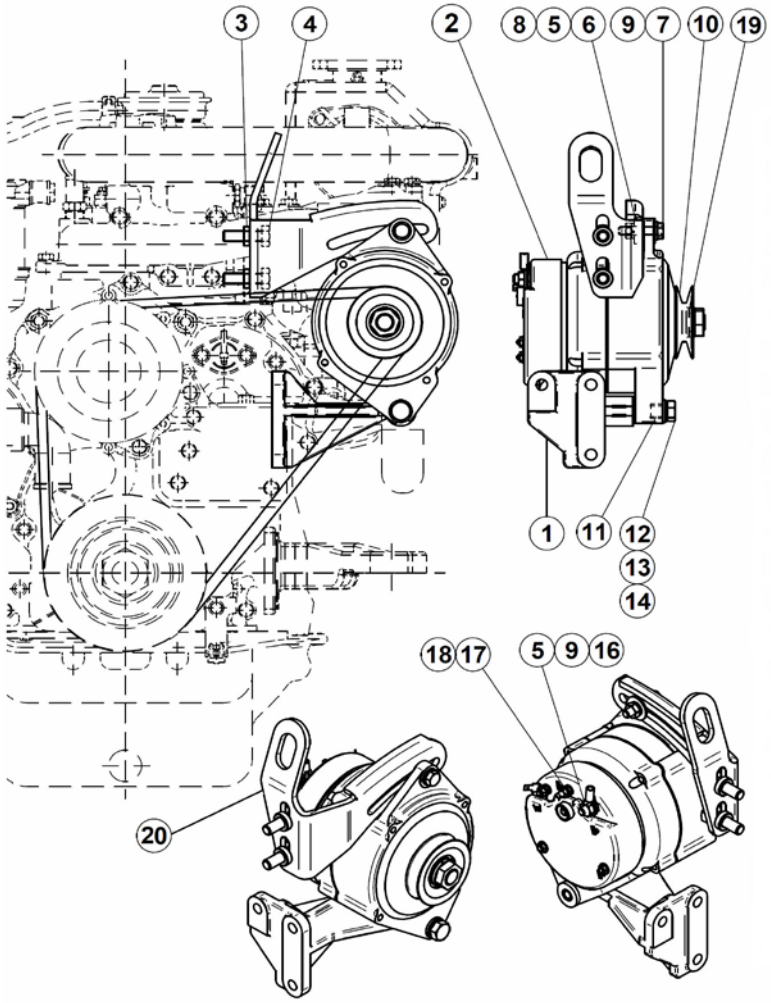

[NS] Not shown

D_SN85_5_5			Parts Starter		
FIG.	REF.	QTY	DESCR.	FROM	UPTO
1	18227001	1	Starter Motor 12V		

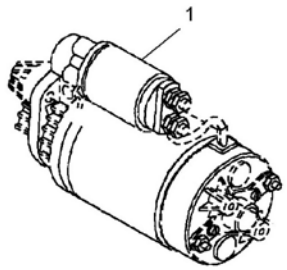

12V Electrical System

D_SN85_5_6			12V Electrical Wiring		
FIG.	REF.	QTY	DESCR.	FROM	UPTO
1	60982201R	1	SN-110 Electrical Wiring		
1*	60982200R	1	SN-110 Electrical Wiring		
1**	60982201R.2	1	SN-110 Electrical Wiring ISKRA		
2	18227019	4	Nut,flange-glow plug [NP]		
4	18227001	1	Starter Motor 12V		
5	13417051	1	Bell Housing		
6	18217001	1	Support		
7	18217005	1	Relay 12V 12-100		
8	18217014	1	Adapter		
9	18217015	1	Adapter		
10	18227017	1	Plug Glow		
11	18227018	1	CABLE Assy		
12	18227027	1	SWITCH Oil Pressure		
13	18517005.1	1	Relay 12-6V		
14	51030005	1	Washer DIN 125-5		
15	51030006	1	Washer DIN 125-6		
16	52102104	1	Bolt DIN 933 M5-10 8.8		
17	52102155	1	Bolt DIN 933 M6-12 8.8		
18	52102257	1	Bolt DIN 933 M8-20 8.8		
19	53033005	1	Washer GROWER DIN 127-5		
20	53033006	1	Washer GROWER DIN 127-6		
21	53033008	1	Washer GROWER DIN 127-8		
22	57000375	2	Washer 17-22-1,5		
23	60900070	1	Thermo-Switch 97ºC		
24	60900980	1	Temperature Sensor		
24*	60900780	1	Temperature SENDER 12 V		
25	60900985	1	Pressure Sensor		
25*	60900785	1	Oil Presure Sender 12-24 V		
26	60985210	1	Engine Wiring Ext. 4 M.		

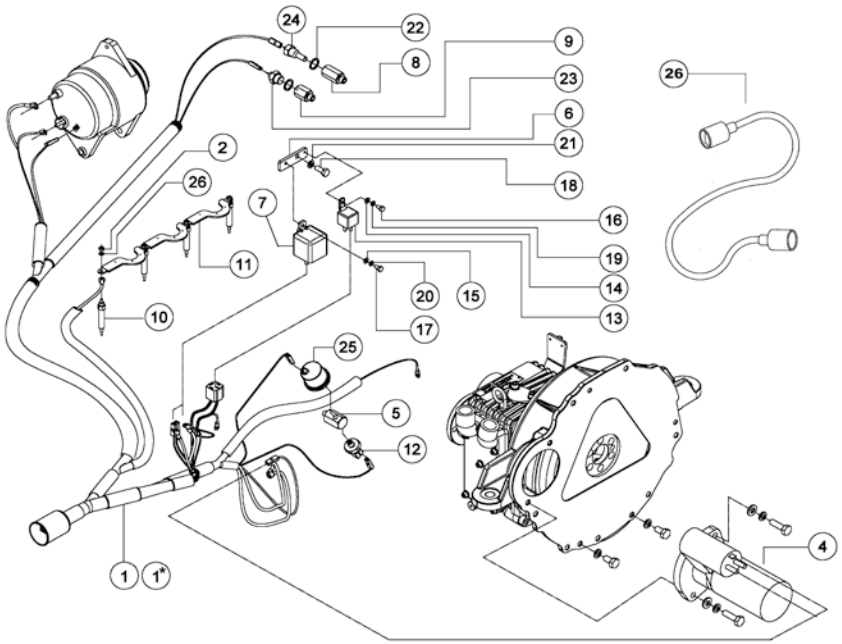

* Aplicable en motores con nº serie ≥ 230357 (SN110) y ≥ 798381 (SN85)
* Available in engines with serial no. ≥ 230357 (SN110) and ≥ 798381 (SN85)
* Équipée des moteurs avec nº de serie ≥ 230357 (SN110) et ≥ 978381 (SN85)

** Aplicable en motores con nº serie ≥ 278657 (SN110)
** Available in engines with serial no. ≥ 278657 (SN110)
** Équipée des moteurs avec nº de serie ≥ 278657 (SN110)

[NP] Not provided

12V Electrical System

D_SN85_5_7			Panel SN-85/110 (SN-85 Nº < 717845)		
FIG.	REF.	QTY	DESCR.	FROM	UPTO
1	60982710	1	TACHOMETER		
2	60900830	1	Bulb Holder 12V-1,2W R.P.M.		
3	60900820	1	Oil PRESURE Gauge 12 V		
4	60900829	2	Bulb Holder 12V		
5	60900815	1	Water Gauge 12 V		
6	60900060	1	Alarm, SWITCH		
7	60900045A	3	Bulb 12V 3W Connector JKL		
8	60900051A	1	LAMP, charge		
9	60900050A	1	LAMP, oil press.		
0	60982010R	1	Panel INSTRUMENTS SN-110		
10	60900052A	1	LAMP, water temp.		
11	60938001R	1	Panel		
12	60900031	1	Key-Locking Switch		
13	60900033	1	KEY,starter switch		
14	60900035	1	Cover,key		
15	60900506	1	Shutter 22		
16	60900118	1	Fuse 10 A.		
17	60900121	1	FuseHolder, panel		
18	60900112	2	DIODE 1 A.		
19	60900111	1	DIODE 6 A.		
NS	60982125	1	Panel SN-85/110 [NS]	17/11/2016	

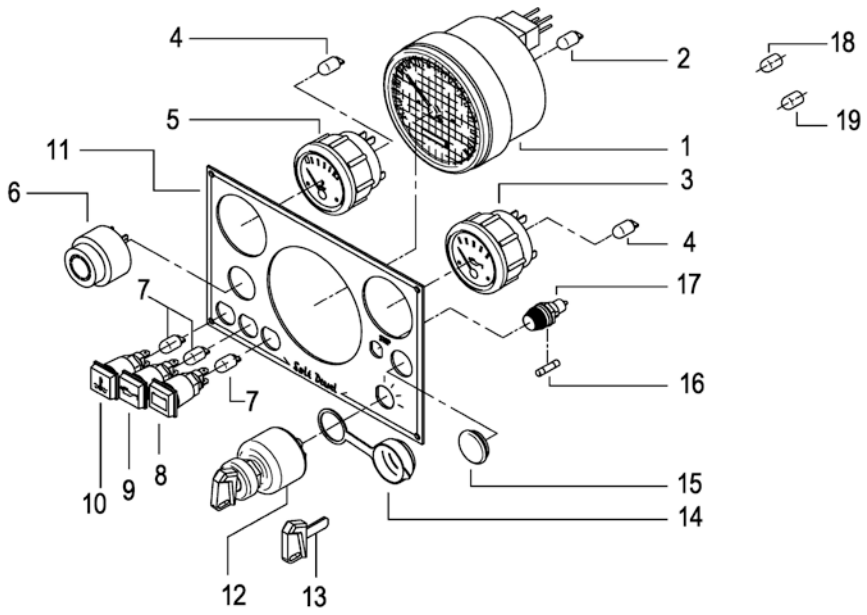

[NS] Not shown

D_SN85_5_8			Panel SN-85/110 (SN-85 Nº > 717844)		
FIG.	REF.	QTY	DESCR.	FROM	UPTO
1	60982130R	1	SVT 30 SN-85/110 Panel (Repl.)		
3	60900929	4	Bulb 12V		
4	60900925	1	VOLTMETER 12 V		
5	60982910	1	TACHOMETER SN-85/110		
6	60900920	1	Oil Pressure Gauge 12 V		
7	54108003	1	Bolt DIN 84 M3-8 INOX.		
8	60900119	1	Fuse 0.5A		
9	60900301	1	Integrated Circuit Plate 12V		
10	60900915	1	Water Gauge 12 V		
11	60990006	1	Gasket Panel		
12	60900037	1	Key-Locking		
13	60900038	1	Cover,KEY		
14	60990005	1	Panel N.3		
15	60900121	1	FuseHolder, panel		
16	60900118	1	Fuse 10 A.		
17	60900036	1	Key,Starter Switch		

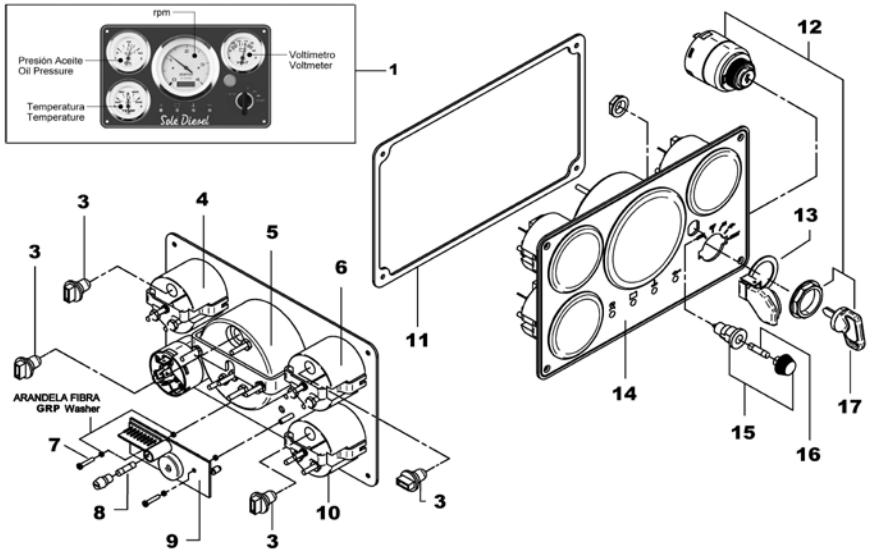

12V Electrical System

D_60982130			SVT 30 SN-110 Panel		
FIG.	REF.	QTY	DESCR.	FROM	UPTO
1	54108003	2	Bolt DIN 84 M3-8 INOX.		
2	60900037	1	Key-Locking		
3	60900037.2	1	Connector		
4	60900910.2	5	Nut 8-32 W/CapTIVE STAR Washer		
5	60900931	4	SOCKET,WEDGE BASE		
6	60900929	4	Bulb 12V		
7	60990005.1	1	Panel N.3		
8	60990006.1	1	Gasket Panel		
9	60900096	1	Cover Plate for Motor Propeller		
10	60900301.2	1	Integrated Circuit Plate 12V Protection		
11	60900910.1	1	MTG Bracket 3" LG GA AMEGA		
12	60900915.2	3	MTG Bracket		
13	60900941	1	VOLTMETER 12V		
14	60982911	1	Tachometer SN-85/110 SVT		
15	60900937	1	Water Gauge 12 V		
16	60900939	1	Oil Pressure Gauge 12V		
NS	60910014	1	System Back Panel SVT/MVT 30 12V [NS]	07/12/2016	

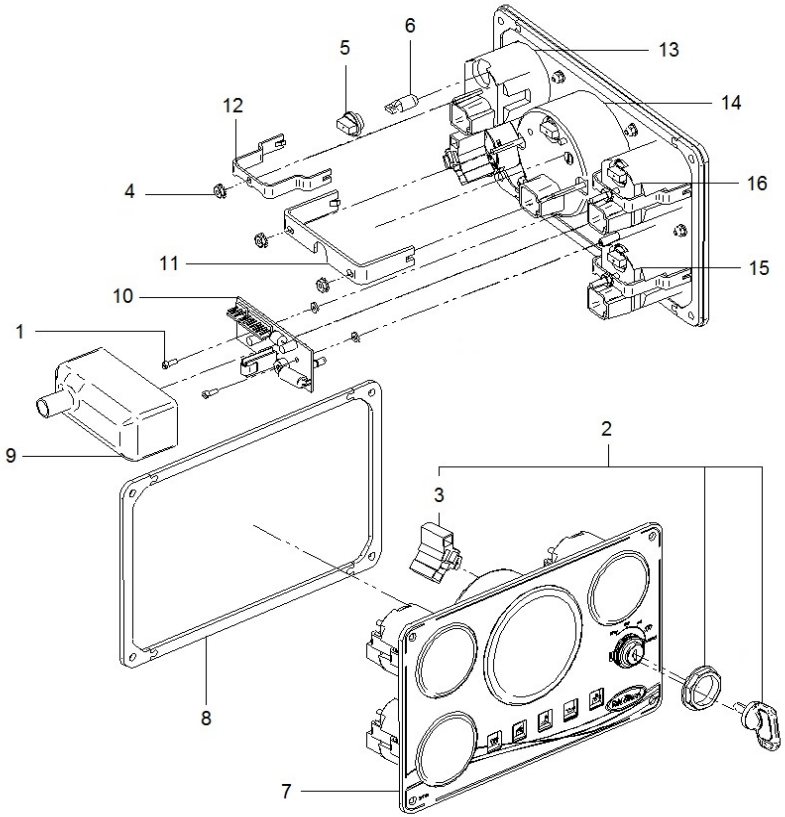

[NS] Not shown

Maintenance Kit

	D_18220101		Gasket Kit		
FIG.	REF.	QTY	DESCR.	FROM	UPTO
0	18220101	1	Gasket Kit		
1	18220017	1	Gasket,Retainer		
2	18220018	1	Seal Oil,CrankShaft		
3	18224041	1	Gasket Oil Pump		
4	18224076	5	O-Ring D. 24X3,5		
5	18322112	1	Gasket Oil Cooler		
6	18220102	1	Gasket Kit-Valve REGRIND.		
7	18220033	1	Gasket,Oil PAN		
8	18224053	1	Gasket Oil STrainer		
9	18220068	1	Gasket		
10	18220069	1	Gasket		
11	18220039	1	Seal Oil		
12	18220019	1	Gasket Plate		
13	18221010	1	Gasket Cover		
14	18221058	10	Washer		
15	18221038	1	Gasket Thermostat Housing		
16	18221039	1	Gasket		
17	18221049	1	Gasket Water Outlet		
18	18221032	1	Gasket MANIFOld		
19	18221035	1	Gasket, Exhaust		
20	18225007	1	Gasket		
21	18221022	1	Gasket Water Pump		
22	18221065	1	Gasket		
23	18222112	2	Seal		
24	13310013	1	Gasket,water pump		
25	16513002	1	Exhaust Elbow Gasket		
26	18011008	2	O-Ring D. 72X3		
27	33311013	1	O-Ring D. 15X2		
28	34711003	1	Gasket Cover		
29	18220094	1	Gasket		
30	18222054	8	Seal Oil,Valve		
31	18220029.1	1	DIPSTICK Oil O-Ring		
32	18224014	4	Gasket Nozzle		
33	18221017	1	Gasket Oil Filler		
34	NU028.75	1	NURAL 28 ORANGE 75ML		

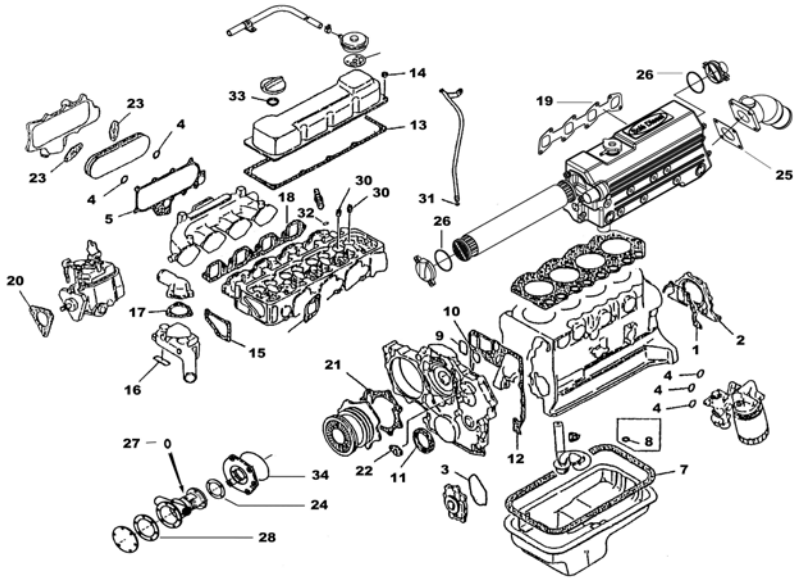

Exhaust Elbows

18213115			Kit Dry Exhaust With Flexible Pipe		
FIG.	REF.	QTY	DESCR.	FROM	UPTO
1	51068060	1	Flange		
2	19013017	1	Expansion,compensator		
3	51066060	1	KNEE 90 FIG. 6002/5 2"		
5	18013016	1	Exhaust Flange (S)		

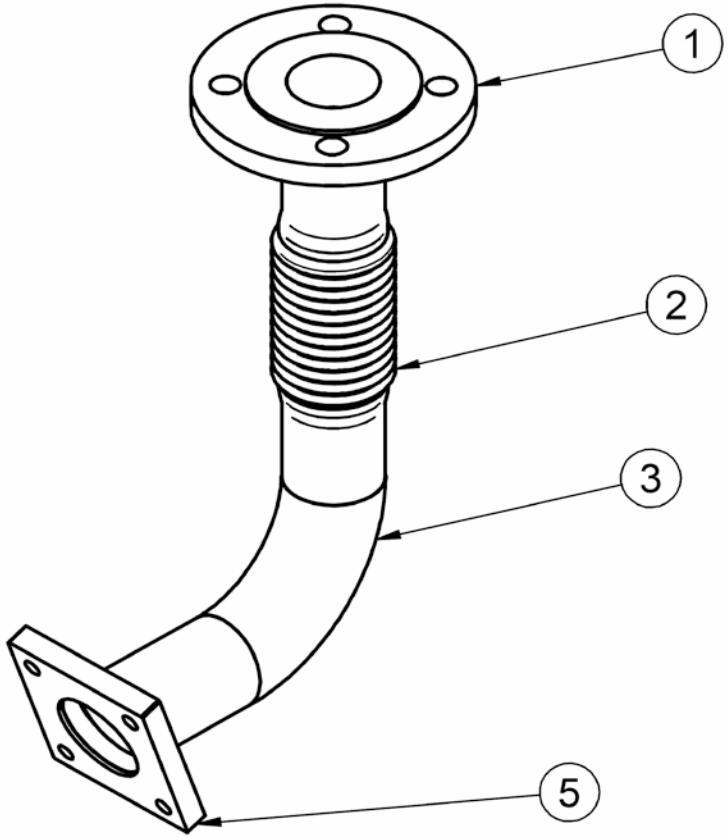

Kit Assembly

18310172K			Centaflex CF-R Coupling Gear		
FIG.	**REF.**	**QTY**	**DESCR.**	**FROM**	**UPTO**
1	53038010	6	Washer DIN 6798-A 10		
2	53104308	6	Bolt DIN 7984 M10-25 12.9		
3	18310172	1	Flexible Coupling Type D SAE 8"		
4	18210024	1	Adaptor Flange		
5	52102310	3	Bolt DIN 933 M10-35 8.8		
6	15211002	2	Stud		
7	52120010	2	Nut DIN 934 M10 8.8		

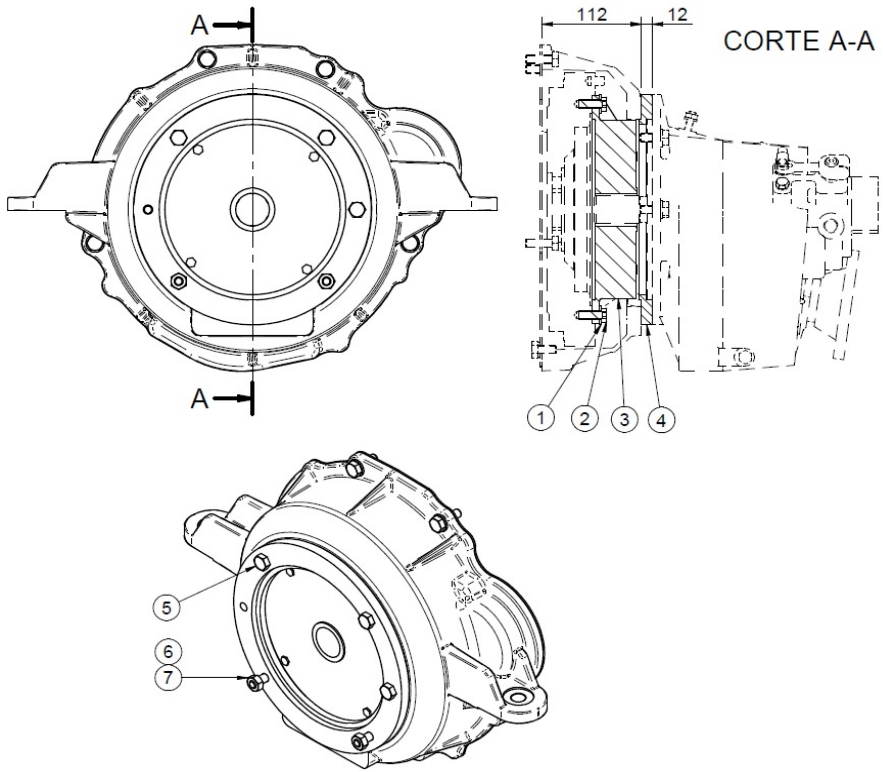

Kit Gearbox

18210100.1			Kit Z-Drive VOLVO 270/280/290 Z=10		
FIG.	**REF.**	**QTY**	**DESCR.**	**FROM**	**UPTO**
1	18510170	1	Flexible Coupling Type B SAE 8"		
2	53038010	10	Washer DIN 6798-A 10		
3	52102308	6	Bolt DIN 933 M10-25 8.8		
4	18210013.2	1	SAE 7 Bell Housing		
5	52102309	4	Bolt DIN 933 M10-30 8.8		
6	18210100.1R	1	Kit Z-Drive Volvo 270/280/290 Z=10		
7	53038012	6	Washer DIN 6798-A 12		
8	52103359	6	Bolt DIN 912 M12-30 8.8		
9	53033010	2	Washer GROWER DIN 127-10		
10	52102307	2	Bolt DIN 933 M10-20 8.8		
11	14711030	1	Hose		
12	14711031	1	Hose		
13	54082025	2	Clamp DIN 3017 25-40/12 W4		
14	58088281	1	Pastic Cable Zip Tie		
15	M87503040	1	Water Intake Hose (HQ) D. 30-38		

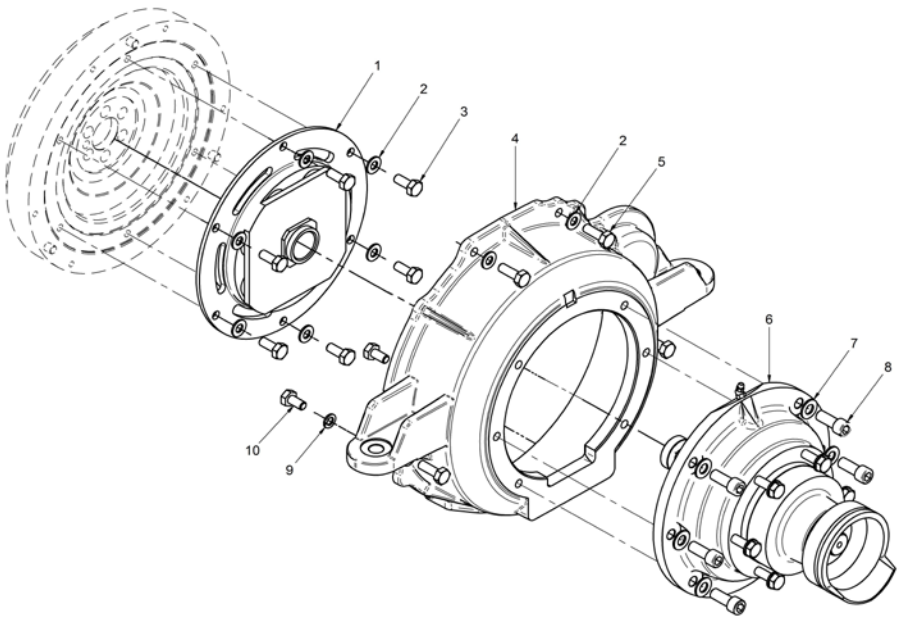

Kit Gearbox

18210110.1			Kit Z-Drive VOLVO 280/290 Z=26		
FIG.	**REF.**	**QTY**	**DESCR.**	**FROM**	**UPTO**
1	18510170	1	Flexible Coupling Type B SAE 8"		
2	53038010	10	Washer DIN 6798-A 10		
3	52102308	6	Bolt DIN 933 M10-25 8.8		
4	18210013.2	1	SAE 7 Bell Housing		
5	52102309	4	Bolt DIN 933 M10-30 8.8		
6	18210110.1R	1	Kit Z-Drive Volvo 280/290 Z=26		
7	53038012	6	Washer DIN 6798-A 12		
8	52103359	6	Bolt DIN 912 M12-30 8.8		
9	53033010	2	Washer GROWER DIN 127-10		
10	52102307	2	Bolt DIN 933 M10-20 8.8		
11	14711030	1	Hose		
12	14711031	1	Hose		
13	54082025	2	Clamp DIN 3017 25-40/12 W4		
14	58088281	1	Pastic Cable Zip Tie		
15	M87503040	1	Water Intake Hose (HQ) D. 30-38		

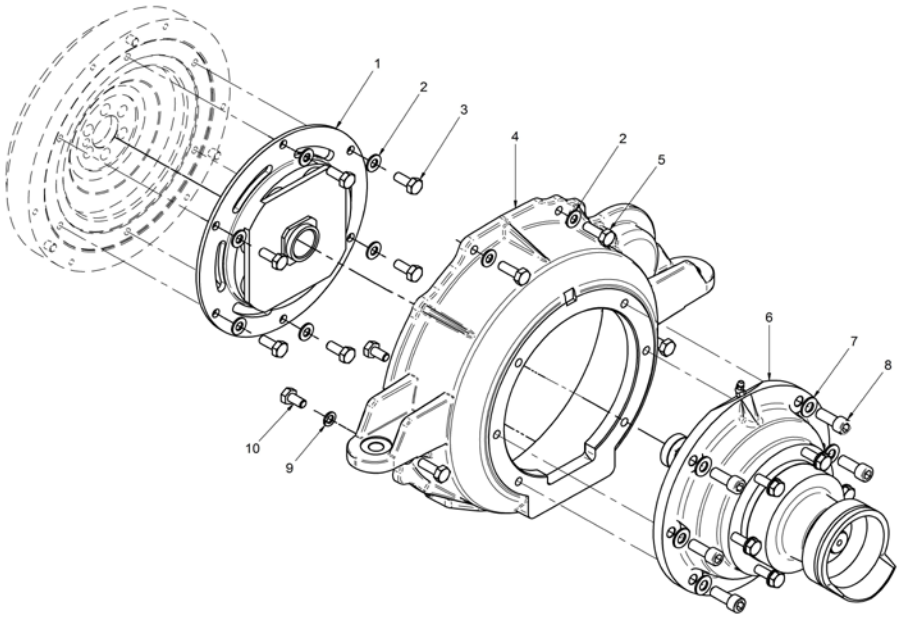

Kit Gearbox

18210200R			Kit GearBox TM-93 Coupling CF-R		
FIG.	REF.	QTY	DESCR.	FROM	UPTO
1	18310172	1	Flexible Coupling Type D SAE 8"		
2	53033010	2	Washer GROWER DIN 127-10		
3	53104308	6	Bolt DIN 7984 M10-25 12.9		
4	52101311	6	Bolt DIN 931 M10-40 8.8		
5	53038010	10	Washer DIN 6798-A 10		
8	18210024	1	Adaptor Flange		
9	24870021	1	BW Housing TM-93/170/485/545		
10	52102306	1	Bolt DIN 933 M10-15 8.8	06/06/2007	
11	56000061	1	Washer 10-16-1,5		
12	24810913	1	Clamp,CABLE		
13	51030005	2	Washer DIN 125-5		
14	18619020	1	Bracket,Gear box control		
15	51030008	6	Washer DIN 125-8		
17	51051107	1	Pin DIN-94 1,6-16		
18	51030006	1	Washer DIN 125-6		
19	ALLPA.93	1	Coupling,cable	23/05/2017	
19	14719115	1	Coupling,cable		23/05/2017
21	54082050	2	Clamp DIN 3017 50-70/12 W4		
22	15312007	2	Cover, water cooler D 30		
23	54082025	4	Clamp DIN 3017 25-40/12 W4		
24	15212022	1	Elbow	15/02/2017	
24	15312009	1	Elbow		14/02/2017
25	18211019	1	Pipe		
26	59072604	2	Clamp	29/03/2014	
27	52120008	4	Nut DIN 934 M8 8.8		
28	14712051	1	Cooler,oil		
29	57000375	4	Washer 17-22-1,5		
30	14712015	2	Bolt,Coupling pipe oil		
31	52102257	4	Bolt DIN 933 M8-20 8.8		
32	53033008	6	Washer GROWER DIN 127-8		
34	13912041	1	Bracket,TM Oil Cooler		
35	51030010	2	Washer DIN 125-10		
36	52120010	2	Nut DIN 934 M10 8.8		
37	17112024	2	Pipe, rev.oil Cooler		
NS	52102256	2	Bolt DIN 933 M8-15 8.8 [NS]		

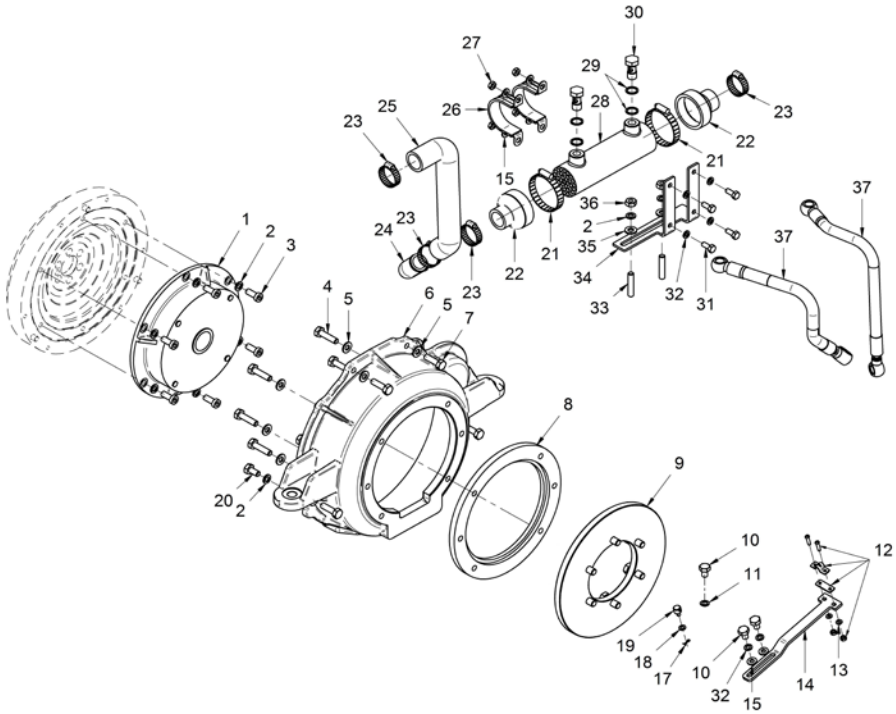

[NS] Not shown

Kit Gearbox

18210210R			Kit GearBox TM-345A Coupling CF-R		
FIG.	**REF.**	**QTY**	**DESCR.**	**FROM**	**UPTO**
1	18310172	1	Flexible Coupling Type D SAE 8"		
2	53038010	11	Washer DIN 6798-A 10		
3	53104308	6	Bolt DIN 7984 M10-25 12.9		
4	18210024	1	Adaptor Flange		
5	52102310	4	Bolt DIN 933 M10-35 8.8		
6	24810913	1	Clamp,CABLE		
7	51030005	2	Washer DIN 125-5		
8	18619020	1	Bracket,Gear box control	02/10/2004	
9	51030008	6	Washer DIN 125-8		
10	53033008	8	Washer GROWER DIN 127-8		
11	52102256	2	Bolt DIN 933 M8-15 8.8		
12	51051107	1	Pin DIN-94 1,6-16		
14	ALLPA.93	1	Coupling,cable	23/05/2017	
14	14719115	1	Coupling,cable		23/05/2017
15	52120010	1	Nut DIN 934 M10 8.8		
16	15211002	1	Stud		
17	17012024	2	Pipe		
18	14712051	1	Cooler,oil		
19	54082050	2	Clamp DIN 3017 50-70/12 W4		
20	15312007	2	Cover, water cooler D 30		
21	54082025	4	Clamp DIN 3017 25-40/12 W4		
22	15212022	1	Elbow	15/02/2017	
23	18211019	1	Pipe		
24	52102257	4	Bolt DIN 933 M8-20 8.8		
25	59072604	2	Clamp	29/03/2014	
26	57000375	4	Washer 17-22-1,5		
27	14712015	2	Bolt,Coupling pipe oil		
29	13912041	1	Bracket,TM Oil Cooler		
30	52120008	6	Nut DIN 934 M8 8.8		
31	51031008	2	Washer DIN 9021 8		
32	12120018	2	Stud		
NS	51030006	3	Washer DIN 125-6 [NS]	23/05/2017	

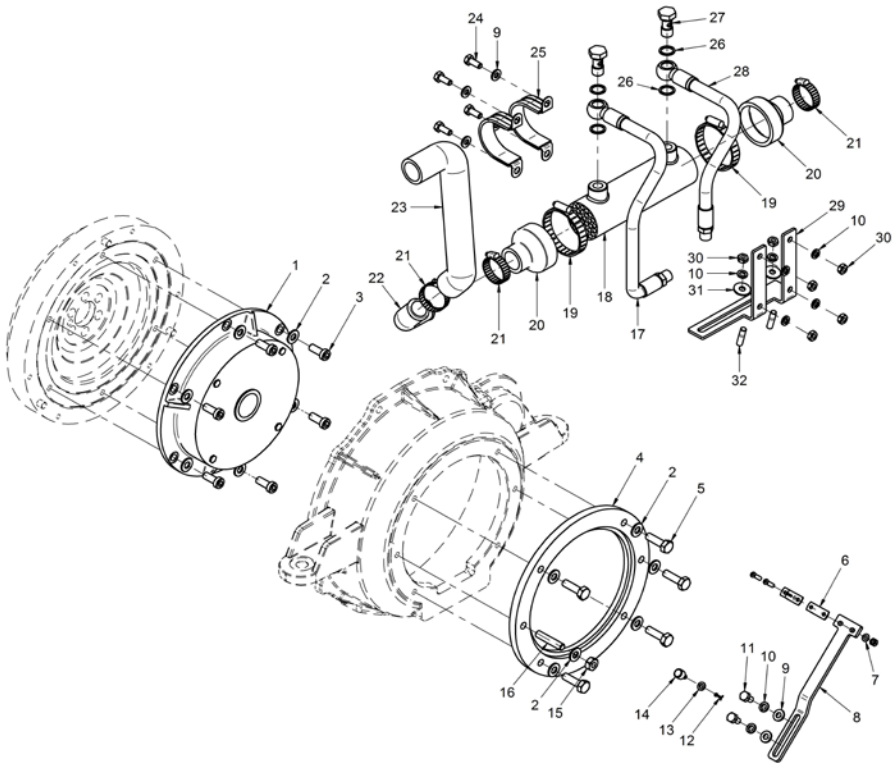

[NS] Not shown

Kit Gearbox

18210211			Kit GearBox PRM-500 (Without Cooler)		
FIG.	**REF.**	**QTY**	**DESCR.**	**FROM**	**UPTO**
1	18210071	1	Coupling, Damper PRM500		
2	53033010	12	Washer GROWER DIN 127-10		
3	52102307	6	Bolt DIN 933 M10-20 8.8		
4	52102309	6	Bolt DIN 933 M10-30 8.8		
5	24230021	1	PRM302,BW adaptor flange		

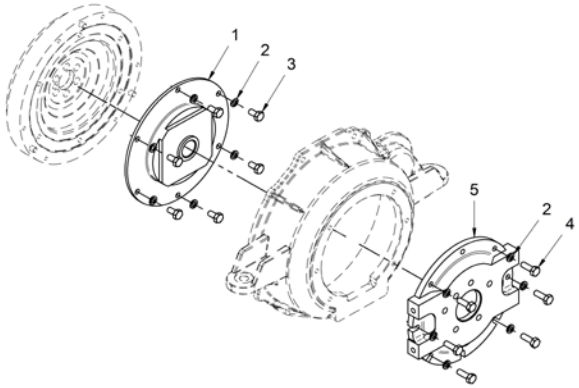

Kit Gearbox

	18210215		Kit Jet Castoldi-05 (With gears)		
FIG.	**REF.**	**QTY**	**DESCR.**	**FROM**	**UPTO**
1	18210215.1A	1	Kit Jet Castoldi-05		
2	18210215.2	1	Gear Kit Jet 05 (37/44)		

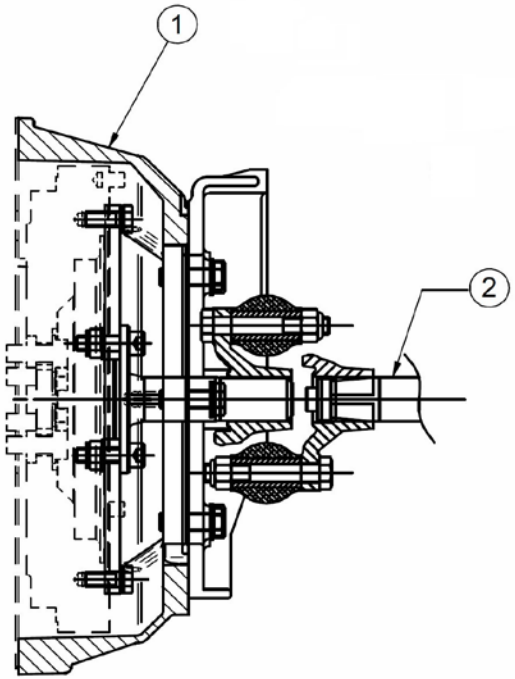

Kit Gearbox

18210215.1A			Kit Jet Castoldi-05		
FIG.	**REF.**	**QTY**	**DESCR.**	**FROM**	**UPTO**
1	18210013.2	1	SAE 7 Bell Housing		
2	53038012	6	Washer DIN 6798-A 12		
3	52102360	6	Bolt DIN 933 M12-35 8.8		
4	18210215.1	1	Kit Jet05 SN-110		

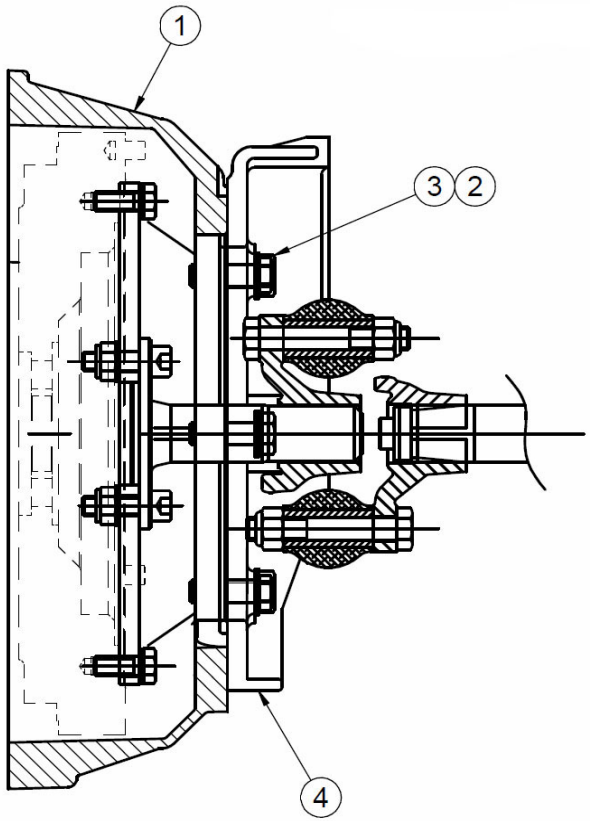

Kit Gearbox

18210217R			Kit GearBox ZF-45C Coupling CF-R		
FIG.	**REF.**	**QTY**	**DESCR.**	**FROM**	**UPTO**
1	18310172	1	Flexible Coupling Type D SAE 8"		
3	53104308	6	Bolt DIN 7984 M10-25 12.9		
4	18210013.2	1	SAE 7 Bell Housing		
6	52102310	3	Bolt DIN 933 M10-35 8.8		
7	18210019	4	Stud		
8	16510004	1	Spacer,bell housing		
9	18210024	1	Adaptor Flange		
10	51030012	6	Washer DIN 125-12		
11	53033012	10	Washer GROWER DIN 127-12		
12	52120012	6	Nut DIN 934 M12 8.8		
13	14719034	1	Pin		
14	14719032	1	SPLIT,piece		
15	51051107	1	Pin DIN-94 1,6-16		
16	51030006	3	Washer DIN 125-6		
17	52102154	2	Bolt DIN 933 M6-10 8.8		
18	18210023	1	Bracket,GearBox Control		
19	13319004	1	Bracket,adjustment morse engin		
20	14719013	1	Clamp,cable		
21	55307104	2	Bolt DIN 86 W3/16-10		
22	52102358	2	Bolt DIN 933 M12-25 8.8		
23	18210021	2	Stud		
25	17112019	1	Bracket,Cooler Oil		
26	51083060	2	Clamp "P" 59-63		
27	52302309	2	Bolt DIN 933 W7/16-30 8.8		
28	14712051	1	Cooler,oil		
29	54082050	2	Clamp DIN 3017 50-70/12 W4		
30	15312007	2	Cover, water cooler D 30		
31	54082025	2	Clamp DIN 3017 25-40/12 W4		
32	18211027	1	Pipe		
33	18211018	1	Rubber		
34	14712015	3	Bolt,Coupling pipe oil		
35	14712031	4	Retainer		
36	14712035	3	Collar, Union		
37	57000375	7	Washer 17-22-1,5		
38	18211023	1	Pipe		

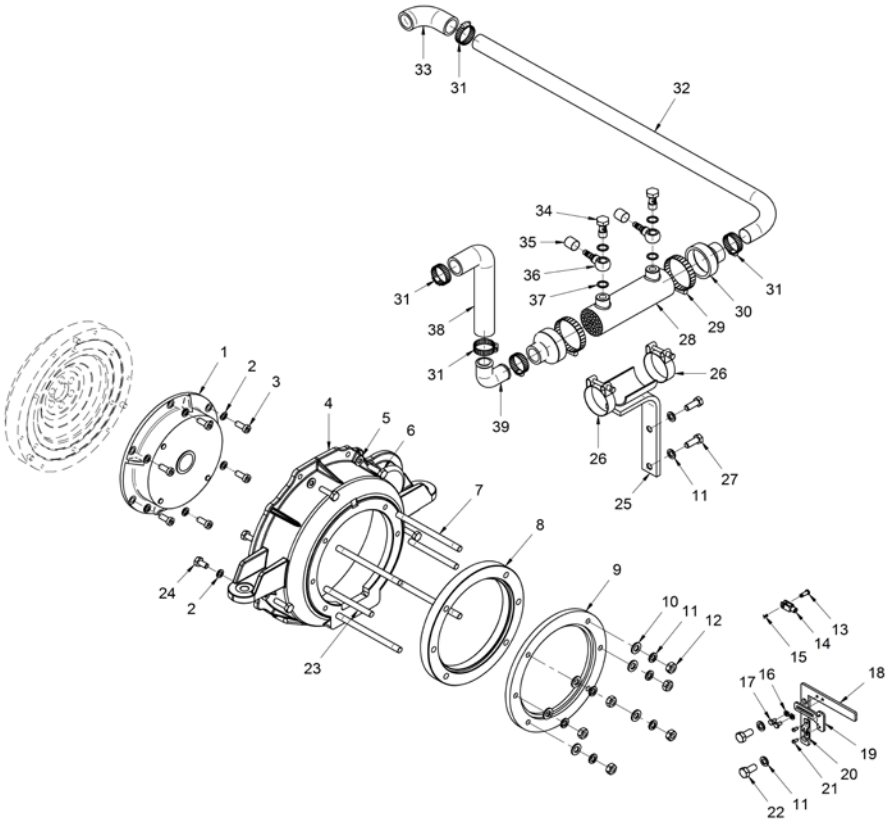

[NS] Not shown
[VAR] Variable according to repair

Kit Gearbox

18210217R			Kit GearBox ZF-45C Coupling CF-R		
FIG.	**REF.**	**QTY**	**DESCR.**	**FROM**	**UPTO**
39	15212022	1	Elbow	15/02/2017	
NS	M84501019	0	LOW Pressure Hose D. 10-19 [NS] [VAR]	23/10/2008	
NS	14712032	1	Coupling,ball pipe oil [NS]		
NS	15211002	2	Stud [NS]		
NS	52120010	2	Nut DIN 934 M10 8.8 [NS]		

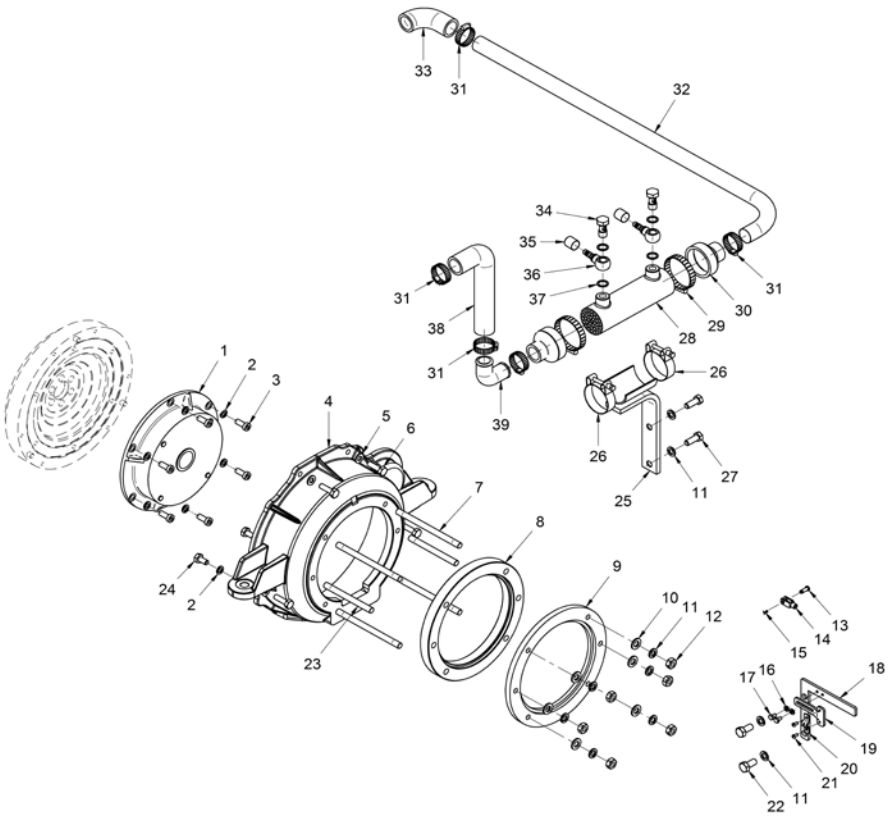

Kit Gearbox

	18210218R		Kit GearBox ZF-63 Coupling CF-R		
FIG.	**REF.**	**QTY**	**DESCR.**	**FROM**	**UPTO**
1	18310172	1	Flexible Coupling Type D SAE 8"		
2	53033010	12	Washer GROWER DIN 127-10		
3	53104308	6	Bolt DIN 7984 M10-25 12.9		
4	53038010	6	Washer DIN 6798-A 10		
6	18210024	1	Adaptor Flange		
7	52101311	5	Bolt DIN 931 M10-40 8.8		
8	51051107	1	Pin DIN-94 1,6-16		
9	14719032	1	SPLIT,piece		
10	14719034	1	Pin		
11	51030006	2	Washer DIN 125-6		
12	52102157	2	Bolt DIN 933 M6-20 8.8		
13	55307104	2	Bolt DIN 86 W3/16-10		
14	14719013	1	Clamp,cable		
15	13319004	1	Bracket,adjustment morse engin		
16	51030010	2	Washer DIN 125-10		
17	52302258	2	Bolt DIN 933 W3/8-25 8.8		
18	53033006	2	Washer GROWER DIN 127-6		
19	52120006	2	Nut DIN 934 M6 8.8		
20	16519020	1	Bracket, Gear box control		
21	52102307	2	Bolt DIN 933 M10-20 8.8		
22	16512010	1	Bracket,oil cooler		
23	51083060	2	Clamp "P" 59-63		
24	14712051	1	Cooler,oil		
25	54082050	2	Clamp DIN 3017 50-70/12 W4		
26	15312007	2	Cover, water cooler D 30		
27	54082025	6	Clamp DIN 3017 25-40/12 W4		
28	18011026	2	Pipe		
30	57000375	6	Washer 17-22-1,5		
31	14712035	2	Collar, Union		
32	14712015	2	Bolt,Coupling pipe oil		
33	14712031	4	Retainer		
34	52120010	1	Nut DIN 934 M10 8.8		
37	17017102	2	Spacer 10,5X22X46		
38	13211036	1	Pipe 30-40-100		
39	52101321	2	Bolt DIN 931 M10-90 8.8		

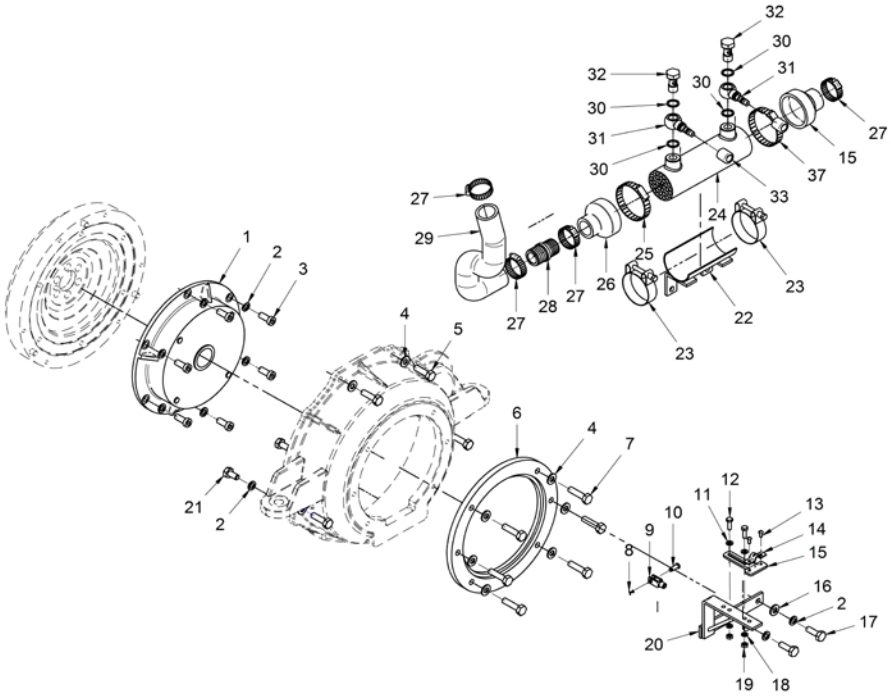

[NS] Not shown
[VAR] Variable according to repair

Kit Gearbox

18210218R			Kit GearBox ZF-63 Coupling CF-R		
FIG.	**REF.**	**QTY**	**DESCR.**	**FROM**	**UPTO**
40	17411034.1	1	Hose GRUPO		
41	15211002	1	Stud		
NS	M84501019	0	LOW Pressure Hose D. 10-19 [NS] [VAR]	23/10/2008	
NS	14712032	2	Coupling,ball pipe oil [NS]		

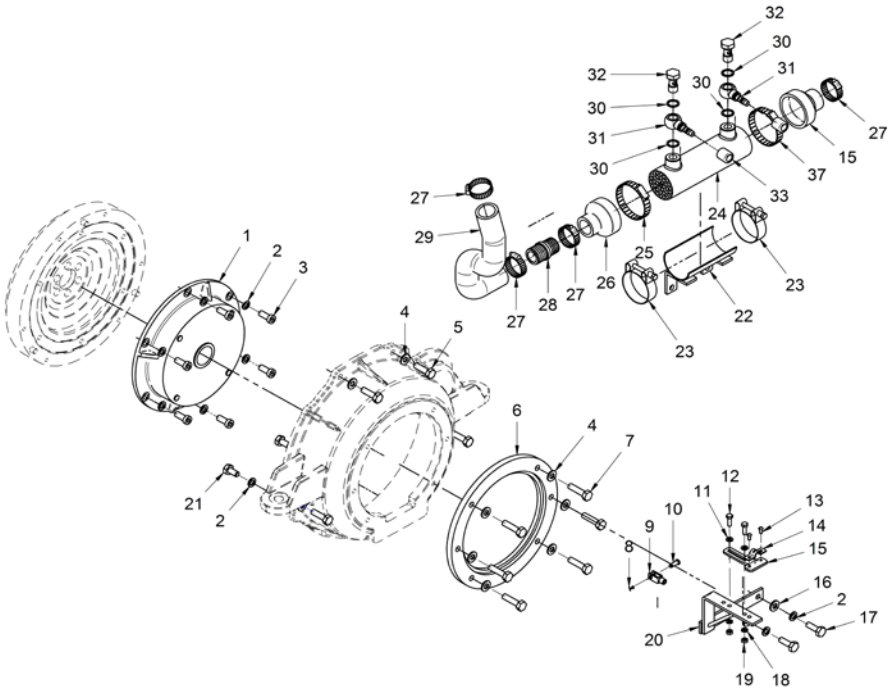

Kit Gearbox

18210219R			Kit GearBox BORG WARNER Coupling CF-R		
FIG.	REF.	QTY	DESCR.	FROM	UPTO
1	18310172	1	Flexible Coupling Type D SAE 8"		
2	53038010	6	Washer DIN 6798-A 10		
3	53033010	6	Washer GROWER DIN 127-10		
4	53104308	6	Bolt DIN 7984 M10-25 12.9		
5	16510004	1	Spacer,bell housing		
6	18210024	1	Adaptor Flange		
7	52101323	6	Bolt DIN 931 M10-100 8.8		
8	14712051	1	Cooler,oil		
9	54082050	2	Clamp DIN 3017 50-70/12 W4		
10	15312007	2	Cover, water cooler D 30		
11	54082025	1	Clamp DIN 3017 25-40/12 W4		
12	15212022	1	Elbow	15/02/2017	
13	18211023	1	Pipe		
14	14712015	3	Bolt,Coupling pipe oil		
15	57000375	6	Washer 17-22-1,5		
16	14712035	3	Collar, Union		
17	18211027	1	Pipe		
18	51083060	2	Clamp "P" 59-63		
19	17112019	1	Bracket,Cooler Oil		
20	52302309	2	Bolt DIN 933 W7/16-30 8.8		
21	53033011	2	Washer GROWER DIN 127-11		
22	14712031	4	Retainer		
23	M84501019	0	LOW Pressure Hose D. 10-19 [VAR]		
24	14712032	1	Coupling,ball pipe oil		

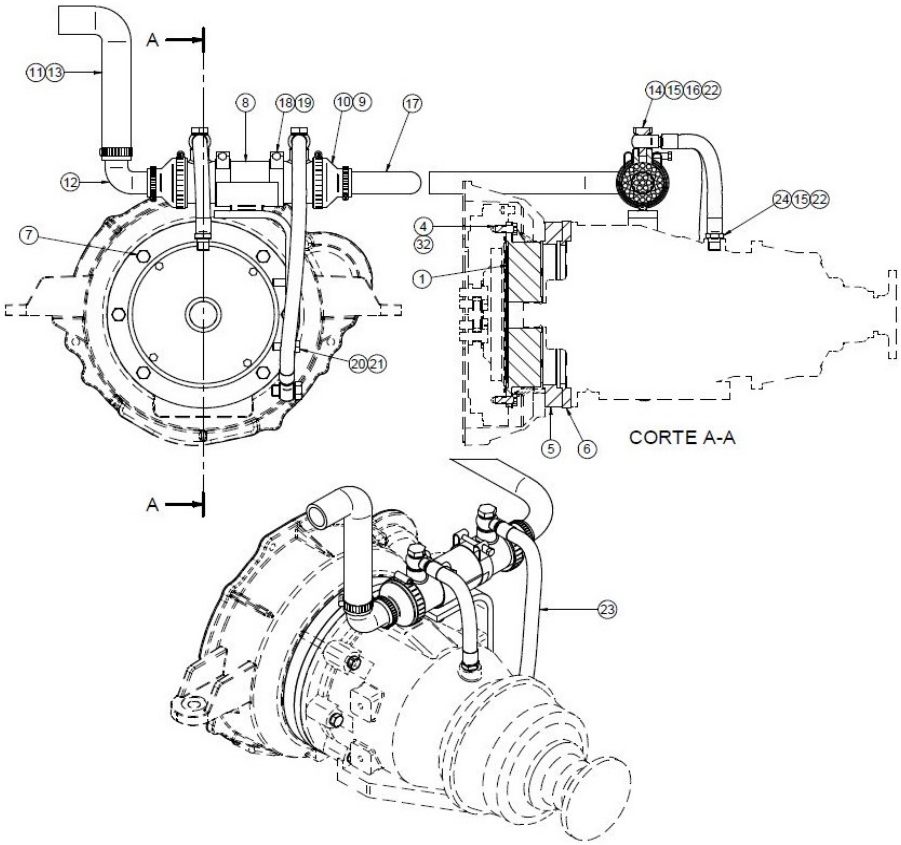

[VAR] Variable according to repair

Kit Gearbox

	18310227		Kit GearBox TMC-260		
FIG.	**REF.**	**QTY**	**DESCR.**	**FROM**	**UPTO**
1	14910010.1	1	Flexible Coupling Type A SAE 8"		
2	53033010	6	Washer GROWER DIN 127-10		
3	52102307	6	Bolt DIN 933 M10-20 8.8		
4	52102259	6	Bolt DIN 933 M8-30 8.8		
5	53038008	6	Washer DIN 6798-A 8		
6	18210012	1	Carcasse Type HURTH		
7	51030006	6	Washer DIN 125-6		
8	52102156	1	Bolt DIN 933 M6-16 8.8		
9	59071383	1	Clamp TYP.1 38/15 W1		
10	17610008	1	HANGER,Engine		
11	53033006	1	Washer GROWER DIN 127-6		
12	52120006	1	Nut DIN 934 M6 8.8		
13	54082025	4	Clamp DIN 3017 25-40/12 W4		
14	24890053	2	Elbow		
15	24890051	2	Cover		
16	24890052	2	O-Ring D. 32X2,5		
17	24890054	1	Cooler Pipe		
18	ALLPA.93	1	Coupling,cable	23/05/2017	
18	14719115	1	Coupling,cable		23/05/2017
19	51051107	1	Pin DIN-94 1,6-16		
20	24880901	1	Bracket, GearBox Control		
21	51030005	2	Washer DIN 125-5		
22	24810913	1	Clamp,CABLE		
23	51030008	2	Washer DIN 125-8		
24	53033008	2	Washer GROWER DIN 127-8		
25	52102257	2	Bolt DIN 933 M8-20 8.8		
NS	M87503242	1	Water Intake Hose (HQ) D. 32-42 [NS]		
NS	13611038	1	Pipe 30-40-75 [NS]		
NS	14711022	1	Hose Nº 2 [NS]		

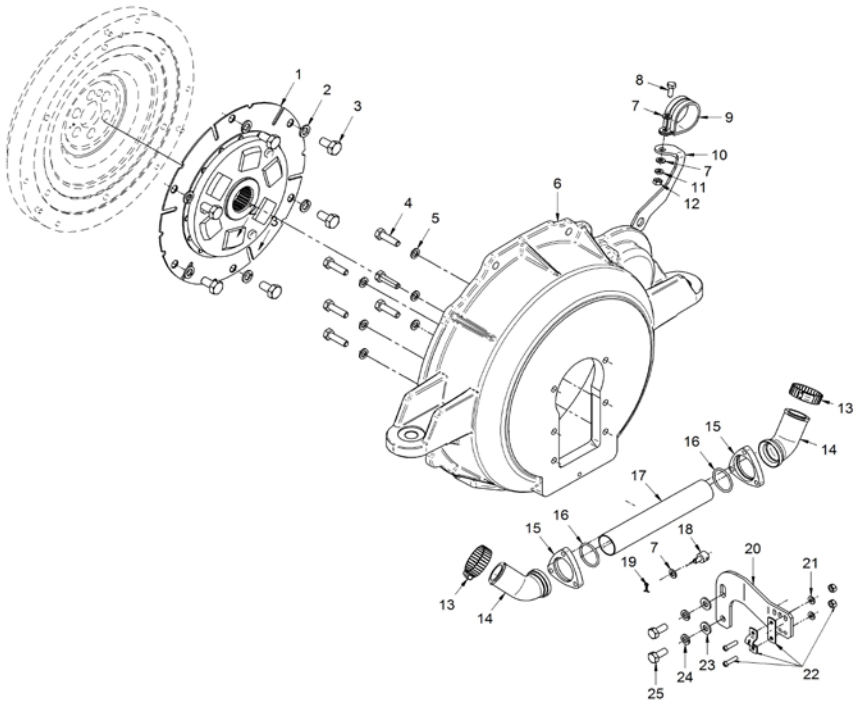

[NS] Not shown

18217100			Kit 2nd Alternator 28V/55A		
FIG.	REF.	QTY	DESCR.	FROM	UPTO
1	17417020	1	Pulley Alternator		
2	17417027	1	Alt. 28V/55A Mahle	16/03/2016	
3	18217020	1	Bracket Alternator		
4	18217021	1	BRACE Generator		
5	18217022	1	Belt Type SPAX 1282		
6	51030008	3	Washer DIN 125-8		
7	51030010	4	Washer DIN 125-10		
8	51030012	2	Washer DIN 125-12		
9	51030016	1	Washer DIN 125-16		
10	52101267	1	Bolt DIN 931 M8-70 8.8		
11	52101269	1	Bolt DIN 931 M8-80 8.8		
12	52101321	1	Bolt DIN 931 M10-90 8.8		
13	52101376	1	Bolt DIN 931 M12-130 8.8		
15	52102309	1	Bolt DIN 933 M10-30 8.8		
16	52120010	1	Nut DIN 934 M10 8.8		
17	52120012	1	Nut DIN 934 M12 8.8		
18	53033008	3	Washer GROWER DIN 127-8		
19	53033010	2	Washer GROWER DIN 127-10		
20	53033012	1	Washer GROWER DIN 127-12		
21	52101311	1	Bolt DIN 931 M10-40 8.8		
NS	M87503242	0	Water Intake Hose (HQ) D. 32-42 [NS] [VAR]		
NS	13310013	1	Gasket,water pump [NS]		
NS	13817011	1	Bracket [NS]		
NS	14711022	1	Hose Nº 2 [NS]		
NS	15212022	1	Elbow [NS]	15/02/2017	
NS	52120008	1	Nut DIN 934 M8 8.8 [NS]		

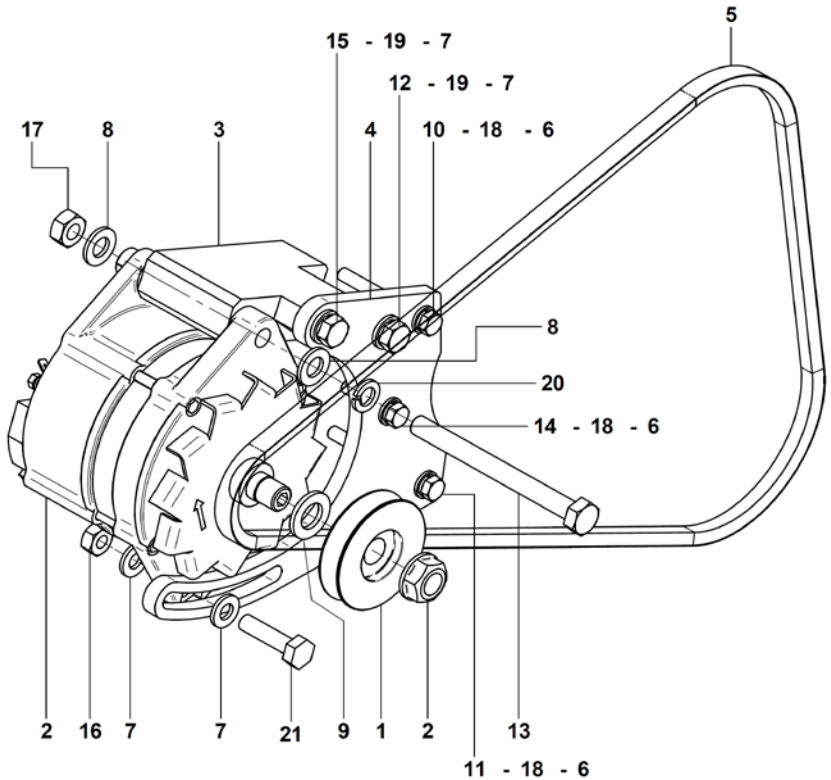

[NS] Not shown
[VAR] Variable according to repair

18217103			Kit 2nd Alternator 14V/95A		
FIG.	REF.	QTY	DESCR.	FROM	UPTO
1	18217023	1	Bracket Alternator		
3	17117022	1	Pulley Alternator, Type A		
4	17117025	1	Alt. 14V/95A Mahle	13/04/2016	
5	18217024	1	BRACE Generator		
6	18217025	1	Belt Type AX48		
7	51030010	3	Washer DIN 125-10		
8	52102309	1	Bolt DIN 933 M10-30 8.8		
9	52101323	1	Bolt DIN 931 M10-100 8.8		
10	53033010	3	Washer GROWER DIN 127-10		
11	51030008	5	Washer DIN 125-8		
12	53033008	3	Washer GROWER DIN 127-8		
13	52101267	1	Bolt DIN 931 M8-70 8.8		
14	52102260	2	Bolt DIN 933 M8-35 8.8		
15	52101269	1	Bolt DIN 931 M8-80 8.8		
16	52120008	1	Nut DIN 934 M8 8.8		
17	52101326	1	Bolt DIN 931 M10-130 8.8		
18	17417025	1	Spacer 13.5x10.2x11	09/09/2015	

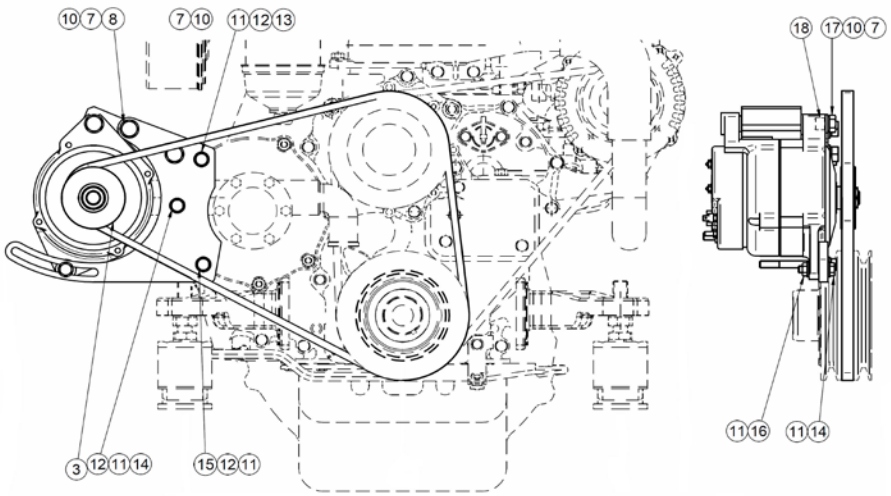

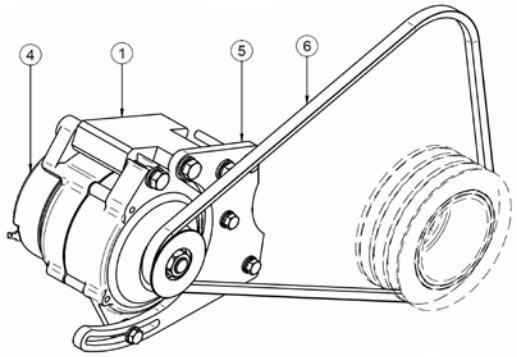

Other Kits

17012093			Kit Trolling Valve for TM-93		
FIG.	REF.	QTY	DESCR.	FROM	UPTO
1	24810050	1	Trolling Valve TM-93		
2	24810913	1	Clamp,CABLE		
3	51030005	2	Washer DIN 125-5		
4	57000375	6	Washer 17-22-1,5		
5	14712015	3	Bolt,Coupling pipe oil		
6	14719115	2	Coupling,cable		
7	51030006	4	Washer DIN 125-6		
8	51051107	2	Pin DIN-94 1,6-16		
NS	17112024	2	Pipe, rev.oil Cooler [NS]		

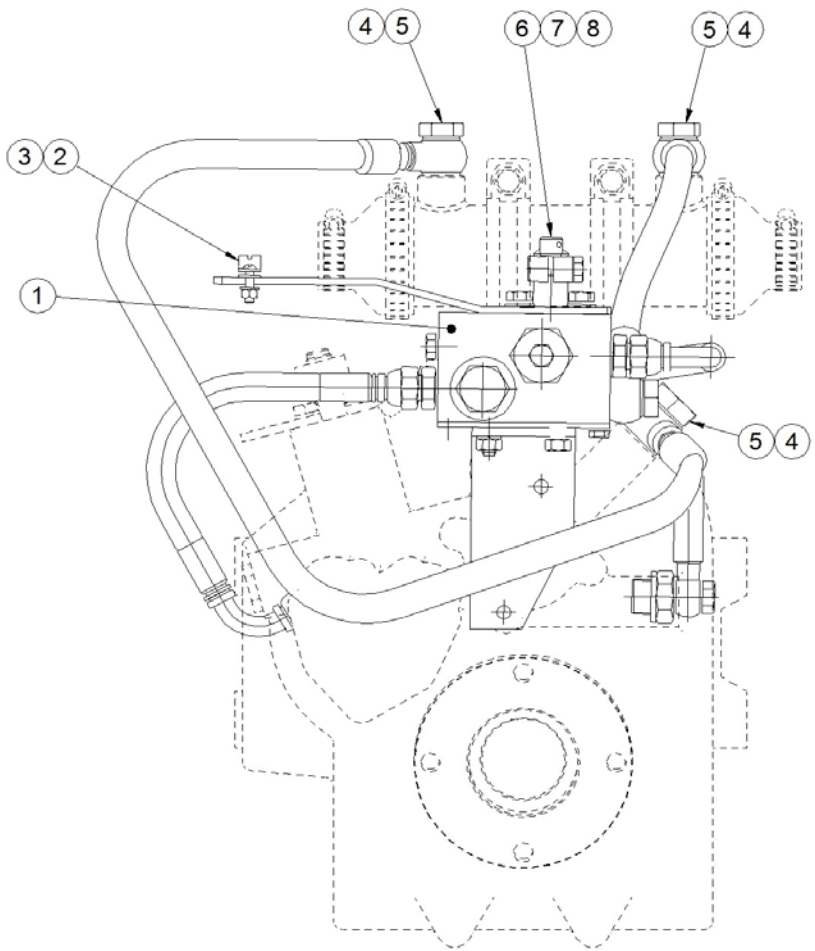

[NS] Not shown

17012345			Kit Trolling Valve for TM-345/A		
FIG.	REF.	QTY	DESCR.	FROM	UPTO
1	24850050	1	Trolling Valve TM-345A		
2	17012024	1	Pipe		
3	17512017	1	Pipe, rev.oil Cooler		
4	14712015	2	Bolt,Coupling pipe oil		
5	57000375	4	Washer 17-22-1,5		
6	24810913	1	Clamp,CABLE		
7	14719115	2	Coupling,cable		
8	51051107	2	Pin DIN-94 1,6-16		
9	51030006	1	Washer DIN 125-6		
10	51030005	2	Washer DIN 125-5		

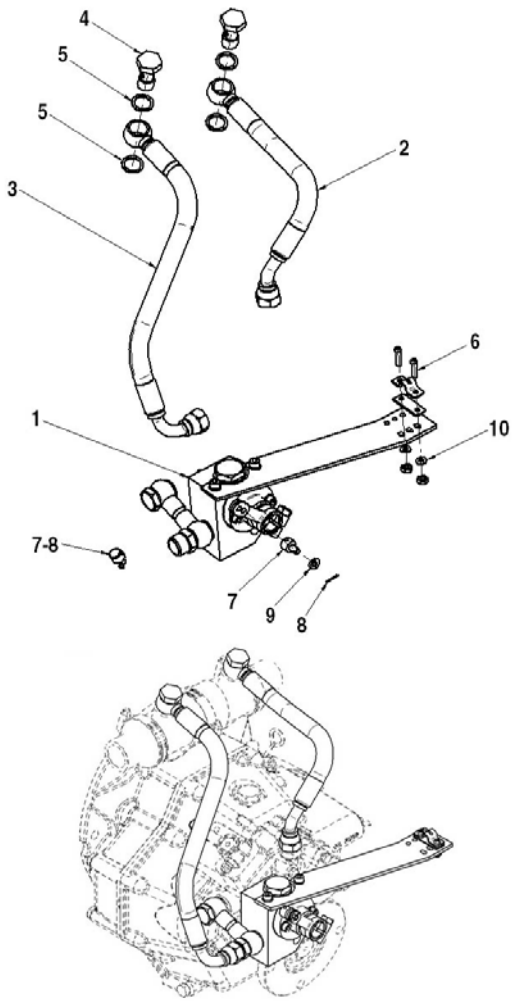

Exhaust System

	18013016		Exhaust Flange (S)		
FIG.	REF.	QTY	DESCR.	FROM	UPTO
1	18013016.1	1	Exhaust Flange		

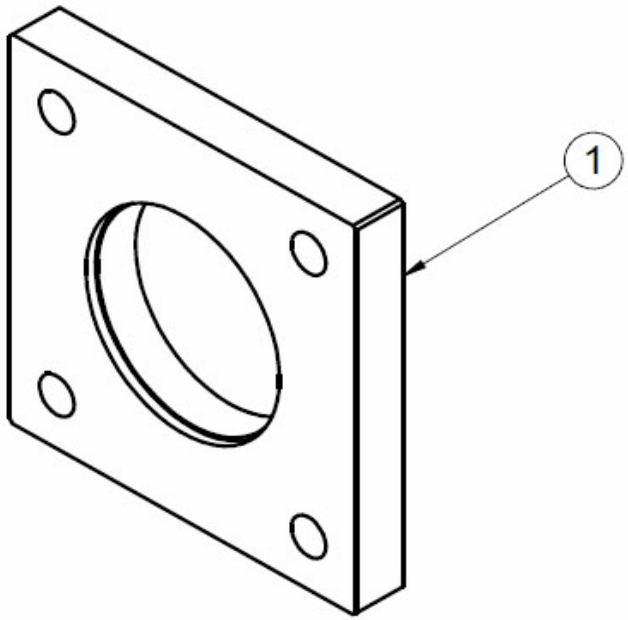

Exhaust System

18213118			Kit Dry Exhaust Flexible Pipe & Silencer		
FIG.	REF.	QTY	DESCR.	FROM	UPTO
1	18213115	1	Kit Dry Exhaust With Flexible Pipe		
2	19013020	1	Gasket		
3	17413018	1	Exhaust Muffler		
4	51030016	4	Washer DIN 125-16		
5	52101463	4	Bolt DIN 931 M16-50 8.8		
6	53033016C	4	Washer	10/12/2009	
7	52120016	4	Nut DIN 934 M16 8.8		
8	17413019	1	RAINCover		

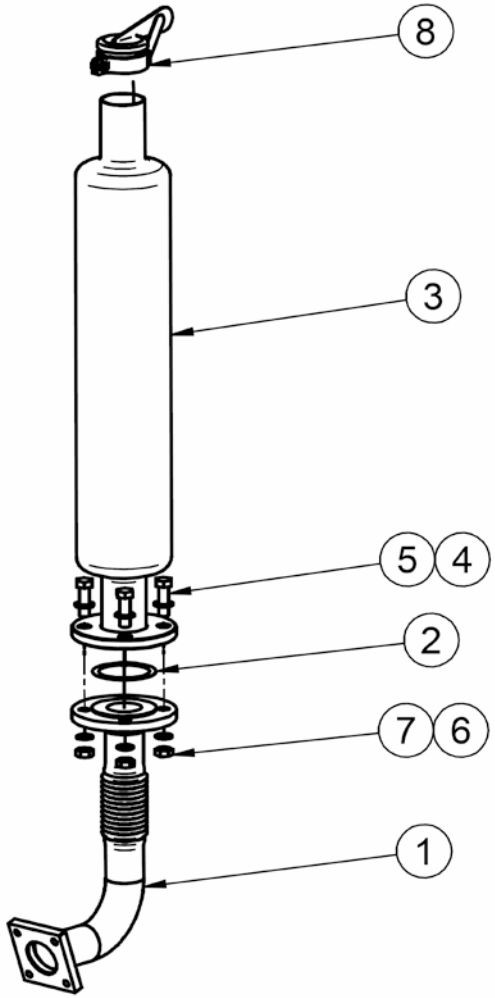

Power Take-off Pulley

18210121			Kit Pulley & Power Take-off 3A		
FIG.	**REF.**	**QTY**	**DESCR.**	**FROM**	**UPTO**
1	18222024.1	1	Pulley		
2	18210034	1	Crankshaft Cone		
3	18210080	1	Shaft 1 1/2"		
4	18210081	1	KEY DIN 6885A 10-8-60		
5	53033008	4	Washer GROWER DIN 127-8		
6	52103263	4	Bolt DIN 912 M8-50 8.8		
7	60500064	1	Butt Washer		
8	53033010	1	Washer GROWER DIN 127-10		
9	52102309	1	Bolt DIN 933 M10-30 8.8		

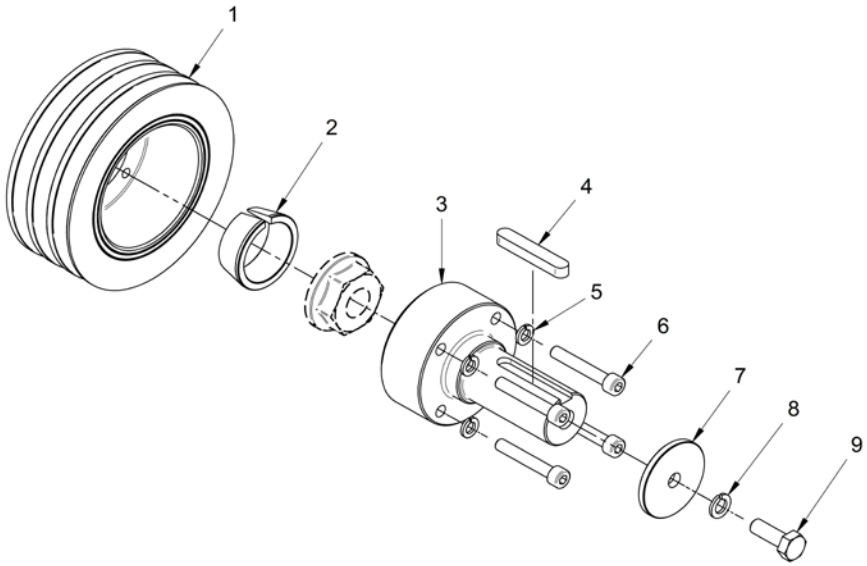

Power Take-off Pulley

18210122			Kit Power Take-off D40		
FIG.	**REF.**	**QTY**	**DESCR.**	**FROM**	**UPTO**
1	18222024.1	1	Pulley		
2	18210034	1	Crankshaft Cone	14/11/2016	
3	18210082	1	Shaft 40 MM.		
4	18210083	1	KEY DIN 6885A 12-8-60		
5	53033008	4	Washer GROWER DIN 127-8		
6	52103263	4	Bolt DIN 912 M8-50 8.8		
7	60500064	1	Butt Washer		
8	53033010	1	Washer GROWER DIN 127-10		
9	52102309	1	Bolt DIN 933 M10-30 8.8		

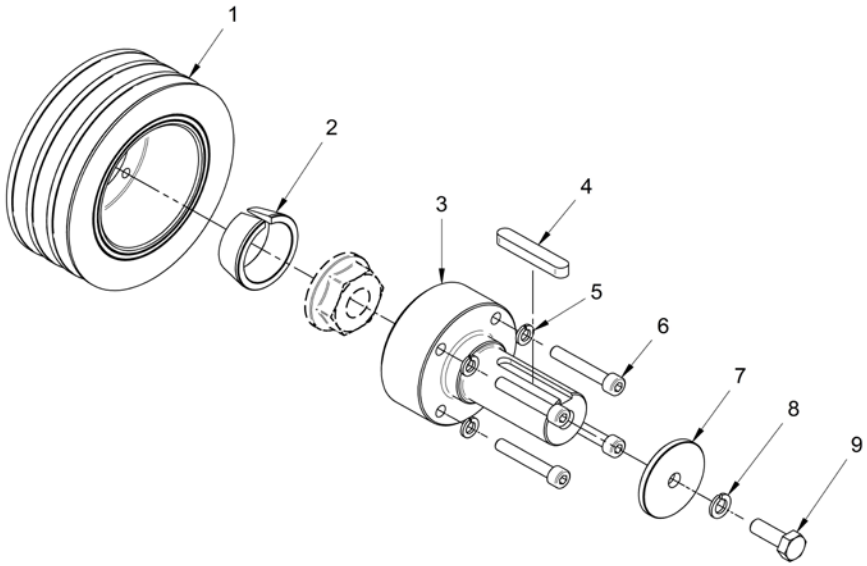

Power Take-off Pulley

18210123			Kit Power Take-off D30		
FIG.	**REF.**	**QTY**	**DESCR.**	**FROM**	**UPTO**
1	18222024.1	1	Pulley		
2	18210034	1	Crankshaft Cone		
3	18210084	1	Power Take-off Shaft, D30MM		
4	18210085	1	KEY DIN 6885A 8-7-55		
5	53033008	4	Washer GROWER DIN 127-8		
6	52103263	4	Bolt DIN 912 M8-50 8.8		
7	60500064	1	Butt Washer		
8	53033010	1	Washer GROWER DIN 127-10		
9	52102309	1	Bolt DIN 933 M10-30 8.8		

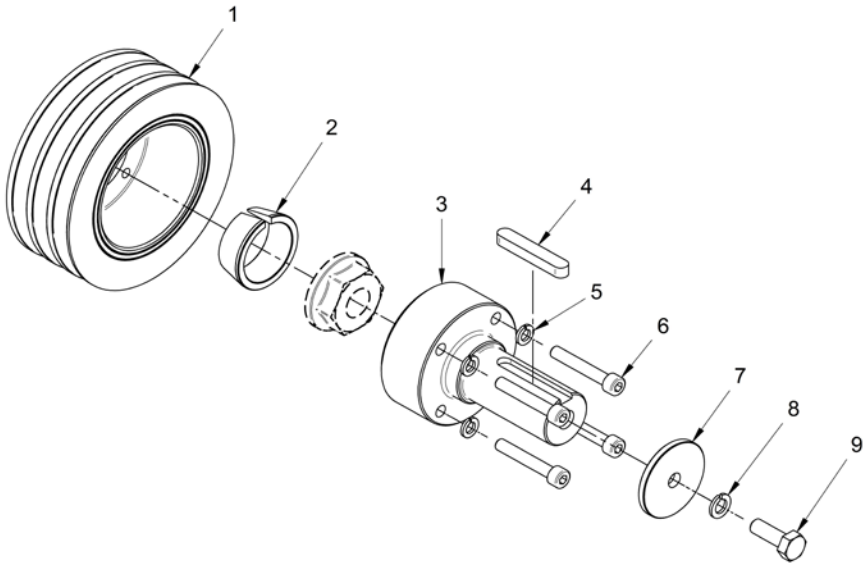

Kit Keel Cooling

18211200			Kit Refroid. Quille et Esc.Sec TM-93/345		
FIG.	REF.	QTY	DESCR.	FROM	UPTO
1	18011102	2	Cover,Water Cooler		
2	18011008	2	O-Ring D. 72X3		
3	60180007	1	Outlet Coupling	20/02/2014	
4	18013016	1	Exhaust Flange (S)		
5	16513002	1	Exhaust Elbow Gasket		
6	18211008	1	Plug		
7	18220047	1	Cover Front		
8	54082032	2	Clamp DIN 3017 32-50/12 W4		
9	54082025	1	Clamp DIN 3017 25-40/12 W4		
10	18211010	1	Clamp		
11	18211009	1	Pipe		
12	16711034	1	Elbow 40-200-200		
13	17411011	1	Pipe		
14	18011026	2	Pipe		
15	52120006	1	Nut DIN 934 M6 8.8		
16	51030006	1	Washer DIN 125-6		
17	53033006	1	Washer GROWER DIN 127-6		
18	52102155	1	Bolt DIN 933 M6-12 8.8		
NS	58088280	2	Pastic Cable Zip Tie [NS]		

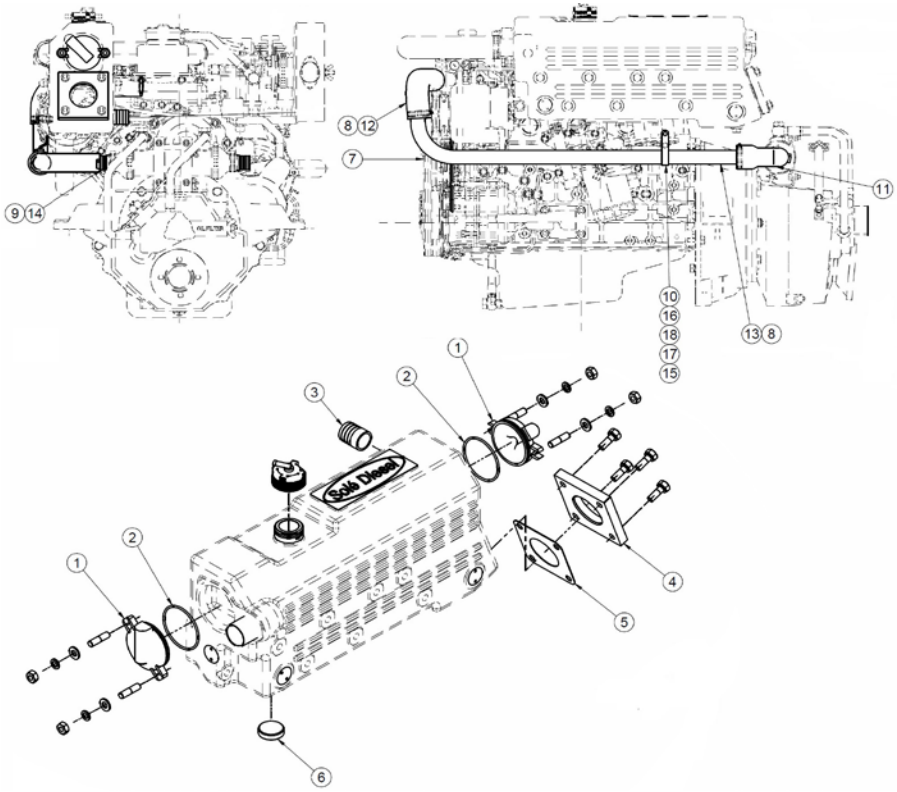

[NS] Not shown

Kit Instrument Panel SVT

60982133			Kit 2nd Panel SVT 40 SN-85/110 12V		
FIG.	**REF.**	**QTY**	**DESCR.**	**FROM**	**UPTO**
1	60982130	1	SVT 30 SN-85/110 Panel	15/06/2016	
2	60982132	1	SVT 40 SN-85/110 Panel	15/06/2016	
3	60900210.2	1	T Double Panel DERIVATION	15/06/2016	

Kits NMEA 2000 - one engine

	61482100		Kit SDC 2000 SN-110 12V		
FIG.	**REF.**	**QTY**	**DESCR.**	**FROM**	**UPTO**
1	61400200	1	Kit SDC 2000 24V Standard		
2	60900091	2	MICRO Relay 12V 12-20		

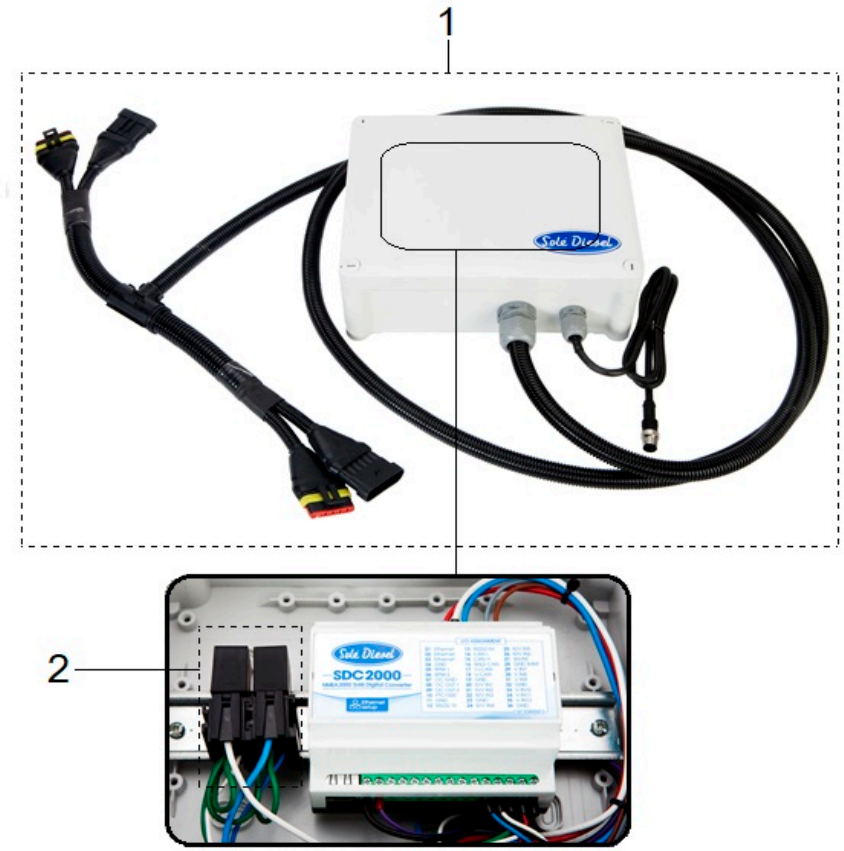

Kits NMEA 2000 - one engine
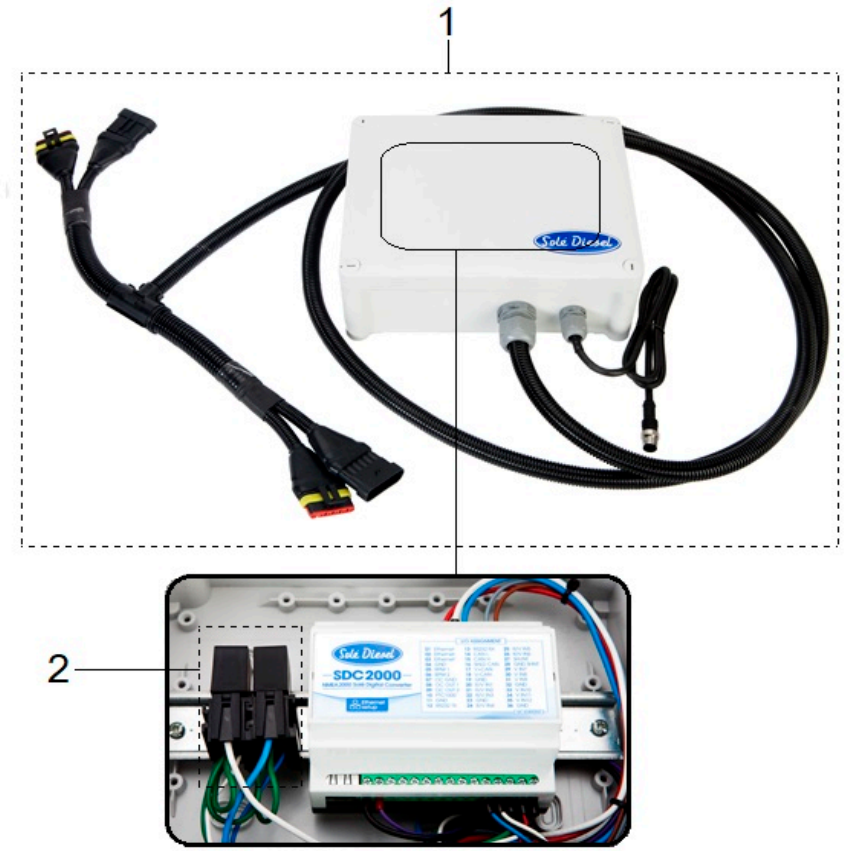
	61482200		Kit SDC 2000 SN-110 24V		
FIG.	**REF.**	**QTY**	**DESCR.**	**FROM**	**UPTO**
1	61400200	1	Kit SDC 2000 24V Standard		
2	60900092	2	MICRO Relay 24V 24-10